DeGarmo's
MATERIALS & PROCESSES IN MANUFACTURING

TENTH EDITION

J T. BLACK | RONALD A. KOHSER

DeGarmo's

MATERIALS AND PROCESSES IN MANUFACTURING

TENTH EDITION

BICENTENNIAL
1807
WILEY
2007
BICENTENNIAL

THE WILEY BICENTENNIAL–KNOWLEDGE FOR GENERATIONS

Each generation has its unique needs and aspirations. When Charles Wiley first opened his small printing shop in lower Manhattan in 1807, it was a generation of boundless potential searching for an identity. And we were there, helping to define a new American literary tradition. Over half a century later, in the midst of the Second Industrial Revolution, it was a generation focused on building the future. Once again, we were there, supplying the critical scientific, technical, and engineering knowledge that helped frame the world. Throughout the 20th Century, and into the new millennium, nations began to reach out beyond their own borders and a new international community was born. Wiley was there, expanding its operations around the world to enable a global exchange of ideas, opinions, and know-how.

For 200 years, Wiley has been an integral part of each generation's journey, enabling the flow of information and understanding necessary to meet their needs and fulfill their aspirations. Today, bold new technologies are changing the way we live and learn. Wiley will be there, providing you the must-have knowledge you need to imagine new worlds, new possibilities, and new opportunities.

Generations come and go, but you can always count on Wiley to provide you the knowledge you need, when and where you need it!

William J. Pesce
Peter Booth Wiley

WILLIAM J. PESCE
PRESIDENT AND CHIEF EXECUTIVE OFFICER

PETER BOOTH WILEY
CHAIRMAN OF THE BOARD

DeGarmo's

MATERIALS AND PROCESSES IN MANUFACTURING

TENTH EDITION

J T. Black
Auburn University-Emeritus

Ronald A. Kohser
University of Missouri–Rolla

BICENTENNIAL 1807 WILEY 2007

John Wiley & Sons, Inc

Cover photos:

The sketchbooks of Leonardo da Vinci (1452-1519) contain two drawings that are of particular interest to the authors of this text. One is a crude sketch of an underwater device, or submarine, with the elongated sausage shape characteristic of many later day successes. The other, reproduced on the cover of this edition, is a “flying-machine,” that bears an uncanny resemblance to a modern-day helicopter. Unlike many of Leonardo’s creations, he apparently made no attempt to further refine the concepts, since there was never a subsequent sketch of either.

Was this man really such a genius? We have no way of knowing, but he may have realized that the construction materials of his day were totally inadequate for either task. One would not want to build a submarine or helicopter from wood, stone or leather. Today’s submarines are constructed from corrosion-resistant, high-strength metals that are also selected for their ability to be fabricated by welding. Aerospace materials must offer high-strength and light-weight, along with fatigue- and fracture-resistance. The rotor arms of modern helicopters are now being made from fiber-reinforced composite materials. The components of the engine and drive assembly have some of the most demanding requirements of modern engineering.

The materials and processes presented in this book are the tools that enable ideas to be converted into reality. The myriad of manufactured items, and the range of uses and applications, demonstrates the success of those materials and processes. Like Leonardo, however, today’s designers continue to push the limits–lighter, stronger, more corrosion resistant, closer to net-shape, more economical. New materials will certainly be developed, and new processes will expand our capabilities. It is the goal of this text to present the capabilities and limitations of current technology with a look toward future advances that hopefully will enable today’s dreams to become tomorrow’s reality.

EXECUTIVE EDITOR	Joseph Hayton
EXECUTIVE PUBLISHER	Don Fowley
ASSOCIATE PUBLISHER	Daniel Sayre
EDITORIAL ASSISTANT	Sandra Kim
MARKETING MANAGER	Phyllis Cerys
SENIOR PRODUCTION EDITOR	Sandra Dumas
CREATIVE DIRECTOR	Harry Nolan
DESIGNER	Hope Miller
MEDIA EDITORS	Steve Chasey/Lauren Sapira
PRODUCTION MANAGEMENT SERVICES	Ingrao Associates/Suzanne Ingrao
COVER PHOTO CREDITS:	
TOP PHOTO	© Kean Collection/Getty Images
BOTTOM PHOTO	© Michael Melford/The Image Bank/Getty Images

This book was set in 10/12 Times Ten by Preparé and printed and bound by *Courier/Westford*.
The cover was printed by *Courier/Westford.*

This book is printed on acid free paper. ∞

ISBN 13-978-0470-05512-0

Printed in the United States of America

10 9 8 7 6 5 4 3 2 1

PREFACE

In the world of manufacturing, significant changes and trends are having a profound impact on our everyday lives. Whether we like it or not, we all live in a technological society, a world of manufactured goods. Every day we come in contact with hundreds of manufactured items, from the bedroom to the kitchen, to the workplace, we use appliances, phones, cars, trains, and planes, TVs, VCRs, DVD's, furniture, clothing, and so on. These goods are manufactured in factories all over the world using manufacturing processes. What are the trends in the manufacturing world, and how do they impact manufacturing processes?

TRENDS IN MANUFACTURING

First, manufacturing has become a global activity with U.S. companies sending work to other countries (China, Taiwan, Mexico) to take advantage of low-cost labor, while many foreign companies are building plants in the United States, to be nearer their marketplace, The automobile manufacturers and their suppliers use just about every process described in this book and some that we do not describe, often because they are closely held secrets.

Second, many manufacturing companies are redesigning their factories (their manufacturing systems) becoming lean producers. and learning how to make goods better (higher quality), cheaper, faster in a flexible way (i.e., they are more responsive to the customers). Almost every plant that you can visit these days is doing something to make itself leaner. Many of them have adopted some version of the Toyota Production System. More importantly, these manufacturing factories are designed with the internal customer (the workforce) in mind, so things like ergonomics and safety are key design requirements. So while this book is all about materials and processes for making the products, the design of the factory cannot be ignored when it comes to making the external customer happy with the product and the internal customer satisfied with the employer.

Third, the number and variety of products and the materials from which they are made continue to proliferate, while production quantities have become smaller. Existing processes must be modified to be more flexible, and new processes must be developed.

Fourth, consumers want better quality and reliability, so the methods, processes, and people responsible for the quality must be continually improved. The trend toward zero defects and continuous improvement requires continuous improvements of the manufacturing system.

Finally the new product development effort to reduce the *time-to-market* for new products is continuing. Many companies are taking wholistic or system wide perspectives, including concurrent engineering efforts to bring product design and manufacturing closer to the customer. There are two key aspects here. First, products are designed to be easier to manufacture and assemble (*called design for manufacture/assembly*). Second, the manufacturing system design is flexible (able to accept new products), so the company can be competitive in the global marketplace.

Basically, manufacturing is a *value-adding* activity, where the conversion of materials into products adds value to the original material. Thus, the objective of a company engaged in manufacturing is to add value and do so in the most efficient manner, using the least amount of time, material, money, space, and labor. To minimize waste and maximize efficiency, the processes and operations need to be properly selected and arranged to permit smooth and controlled flow of material through the factory and provide for product variety. Meeting these goals requires a well-designed and efficient manufacturing system.

PURPOSE OF THE BOOK

The purpose of this book is to give design and manufacturing engineers and technicians basic information on materials, manufacturing processes and systems. The materials section focuses on properties and behavior. Thus, aspects of smelting and refining (or other material production processes) are presented only as they affect manufacturing and manufactured products. In terms of the processes used to manufacture items (converting materials into products), this text seeks to provide a descriptive introduction to a wide variety of options, emphasizing how each process works and its relative advantages and limitations. Our goal is to present this material in a way that can be understood by individuals seeing it for the very first time. This is not a graduate text where the objective is to thoroughly understand and optimize manufacturing processes. Mathematical models and analytical equations are used only when they enhance the basic understanding of the material. So, while the text is an introductory text, we do attempt to incorporate new and emerging technologies like a welding process that is being adapted to alter and improve material properties and performance without creating a joint.

The book also serves to introduce the *language of manufacturing*. Just as there is a big difference between a gun hand and a hand gun, there is a big difference between an engine lathe and a lathe engine. Everyday English words (words like *climb, bloom, allowance, chuck, coin, head,* and *ironing*) have entirely different meanings on the factory floor, a place where misunderstandings can be very costly. Pity the engineer who has to go on the plant floor not knowing an engine lathe from a milling machine or what a press brake can do. This engineer quickly loses all credibility with the people who make the products (and pay the engineers' salaries). However, the modern manufacturing engineer must be able to deal with real workplace problem-solving techniques like Taguchi methods and six sigma and developing manufacturing cells to make product families. This requires redesign of all the elements of the manufacturing systems—the machine tools and manufacturing processes, the workholding devices, the material handling equipment, and the retraining of the people who work in the system.

HISTORY OF THE TEXT

In 1957, E. Paul DeGarmo was a mechanical engineering professor at the University of California, Berkley when he wrote the first edition of Materials and Processes in Manufacturing. The book quickly became the emulated standard for introductory texts in manufacturing. Second, third, and fourth editions followed in 1962, 1969, and 1974. DeGarmo had begun teaching at Berkeley in 1937, after earning his M.S. in mechanical engineering from California Institute of Technology. He worked as a factory control engineer at Firestone Tire and Rubber Company while attending Caltech. DeGarmo was a founder of the Department of Industrial Engineering (now Industrial Engineering and Operations Research) and served as its chair from 1956–1960. He was also assistant dean of the College of Engineering for three years while continuing his teaching responsibilities.

He retired from active teaching in 1971 and he continued his research, writing, and consulting for many years. In 1977, after the publication of the fourth edition of *Materials and Processes in Manufacturing*, he received a letter from Ron Kohser, then an assistant professor at Missouri-Rolla who had many suggestions regarding the materials chapters. DeGarmo asked Kohser to rewrite those chapters for the fifth edition, which Ron did. After the fifth edition DeGarmo decided he was really going to retire and after a national search, recruited J T. Black, then a Professor at Ohio State, to co-author the book. For the sixth edition, seventh edition, eighth and ninth editions (published in 1984, 1988, and 1997, respectively, by Macmillan, Prentice Hall and 1999 and 2003 by John Wiley & Sons), Ron Kohser and J T. Black have shared the responsibility for the text. The chapters on engineering materials, casting, forming, powder metallurgy, joining and non-destructive testing have been written or revised by Ron Kohser. J T. Black has assumed the responsibility for the introduction and chapters on material removal, metrology, surface finishing, quality control and manufacturing systems design.

DeGarmo died in 2000, three weeks short of his 93^{rd} birthday. His wife Mary died in 1995; he is survived by his sons, David and Richard, and many grandchildren. For this 10th edition, we honor our mentor E. Paul DeGarmo with a change in the title to include his name. We are forever indebted to Paul for selecting us to carry on the tradition of his book on its' fiftieth anniversary!

50TH ANNIVERSARY EDITION!

Any long-term user of this book will note a significant change in its title—from *Materials and Processes in Manufacturing* by DeGarmo, Black, and Kohser to *DeGarmo's Materials and Processes in Manufacturing* by Black and Kohser. Paul DeGarmo initiated this text in 1957 and nurtured it through a number of editions. Even after his retirement, through his death in 2000, Paul maintained an active interest and involvement. In recognition, the 9th edition, published in 2003, carried his name as a posthumous coauthor. For 50 years, this text has been known by many as simply "DeGarmo," and it is this identity that we wish to continue by moving his name to become a preface to the former title.

In 1957 Dr. DeGarmo observed that engineering education had begun to place more emphasis on the underlying sciences at the expense of hands on experience. Most of his students were coming to college with little familiarity with materials, machine tools, and manufacturing methods that their predecessors had acquired through the old "shop" classes. If these engineers and technicians were to successfully convert their ideas into reality, they needed a foundation in materials and processes, with emphasis on their opportunities and their limitations. He sought to provide a text that could be used in either a one- or two-semester course designed to meet these objectives. The materials sections were written with an emphasis on use and application. Processes and machine tools were described in terms of what they could do, how they do it, and their relative advantages and limitations, including economic considerations. Recognizing that many students would be encountering the material for the first time, clear description was accompanied by numerous visual illustrations.

Paul's efforts were well received, and the book quickly became the standard text in many schools and curricula. As materials and processes evolved, advances were incorporated into subsequent editions. Computer usage, quality control, and automation were added to the text, along with other topics, so that it continued to provide state-of-the-art instruction in both materials and processes. As competing books entered the market, one was forced to note that their subject material and organization tended to mimic the DeGarrno text.

Professors Black and Kohser are proud to continue Paul's legacy. It is fitting that this 10th edition will be published in 2007, 50 years following the initial efforts of Professor DeGarmo. It is further fitting that his name continue to appear on this 50th anniversary edition and any subsequent editions.

THE 10TH EDITION

E. Paul DeGarmo wanted a book that explained to engineers how the things they designed are made. *DeGarmo's Materials and Processes in Manufacturing* is still written providing a broad, basic introduction to the fundamentals of manufacturing. The book begins with a survey of engineering materials, the "stuff" that manufacturing begins with, and seeks to provide the basic information that can be used to match the properties of a material to the service requirements of a component. A variety of engineering materials are presented, along with their properties and means of modifying them. The materials section can be used in curricula that lack preparatory courses in metallurgy, materials science, or strength of materials, or where the student has not yet been exposed to those topics. In addition, various chapters in this section can be used as supplements to a basic materials course, providing additional information on topics such as heat treatment, plastics, composites, and material selection.

Following the materials chapters, measurement and nondestructive testing are introduced with a manufacturing perspective. Then chapters on casting, forming, powder metallurgy, material removal, and joining are all developed as families of manufacturing processes.

Each section begins with a presentation of the fundamentals on which those processes are based. This is followed by a discussion of the various process alternatives, which can be selected to operate individually or be combined into an integrated system.

In the last two chapters there is some in depth material on surface engineering and quality control. Engineers need to know how to determine process capability and if they get involved in six sigma projects, to know what sigma really measures. There is also introductory material on surface integrity, since so many processes produce the finished surface and residual stresses in the components.

WHAT'S NEW IN 10e:

- New chapter on measurement, inspection and testing
- New chapter on *electronic processes*
- New examples of basic calculations in machining chapters
- NC chapter reorganized with more examples
- Reclassification of metal deformation processes into bulk and sheet
- Expanded coverage of new and emerging technology, such as friction-stir welding
- Expanded coverage of polymers; ceramic materials and composites, and the processes that are unique to those materials.

Throughout the book, case studies have been designed to make students aware of the great importance of properly coordinating design, material selection, and manufacturing to produce a satisfactory and reliable product.

The text is intended for use by engineering (mechanical, manufacturing, and industrial) and engineering technology students, in both two- and four-year undergraduate degree programs. In addition, the book is also used by engineers and technologists in other disciplines concerned with design and manufacturing (such as aerospace and electronics). Factory personnel will find this book to be a valuable reference that concisely presents the various production alternatives and the advantages and limitations of each. Additional or more in-depth information on specific materials or processes can be found in the various references posted on the internet along with chapters on rapid prototyping, automation and enterprise systems.

SUPPLEMENTS

For instructors adopting the text for use in their course, an *instructor solutions manual* is available through the book website: www.wiley.com/college/degarmo. Also available on the website is a set of *powerpoint lecture slides* created by Philip Appel at Gonzaga University.

Three additional chapters, as identified in the table of contents, are available on the book website. The registration card attached on the inside front cover provides information on how to access and download this material. If the registration card is missing, access can be purchased directly on the website www.wiley.com/college/degarmo, by clicking on "student companion site" and then an the links to the chapter titles.

ACKNOWLEDGMENTS

The authors wish to acknowledge the multitude of assistance, information, and illustrations that have been provided by a variety of industries, professional organizations, and trade associations. The text has become known for the large number of clear and helpful photos and illustrations that have been graciously provided by a variety of sources. In some cases, equipment is photographed or depicted without safety guards, so as to show important details, and personnel are not wearing certain items of safety apparel that would be worn during normal operation.

Over the many editions, there have been hundreds of reviewers, faculty, and students who have made suggestions and corrections to the text. We continue to be grateful for the time and interest that they have put into this book. In this edition we benefited from the comments of the following reviewers: J. Don Book, Pittsburg State University;

Jan Brink, Midwestern State University; Rene A.Chapelle, University of Houston; Joe Chow, Florida International University; Kurt Colvin, California Polytechnic State University, Pomona; Subi Dinda, Oakland University; Roman Dubrovsky, New Jersey Institute of Technology; Richard B. Griffin, Texas A&M University–Main; Rodney G. Handy, Purdue University; T. Kesavadas, State University of New York, Buffalo; John Lee, San Jose State University; H. Joel Lenoir, Western Kentucky University; Steven Y.Liang, Georgia Institute of Technology; Victor Okhuysen, California Polytechnic State University, Pomona; Lewis N. Payton, Auburn University; Zhijian Pei, Kansas State University; William Schoech, Valparaiso University; Mala M.Sharma, Bucknell University; Bharat S.Thakkar, Illinois Institute of Technology; and Alan Zoyhofski, Rochester Institute of Technology.

The authors would also like to acknowledge the contributions of Dr. Elliot Stern for the dynamics of machining section in Chapter 20. Dr. Brian Paul for his work on the rapid prototyping and electronics chapters, and Dr. Barney Klamecki for his help with the 9th edition.

As always, our wives have played a major role in preparing the manuscript. Carol Black and Barb Kohser have endured being “textbook widows” during the time when the last four editions were written. Not only did they provide loving support, but Carol also provided hours of expert proofreading, typing, and editing as the manuscript was prepared.

Finally special thanks to our acquisitions editor, Joseph P. Hayton, for putting up with two procrastinating professors, who tried both his patience and his abilities as he coordinated all the various activities required to produce this text as scheduled. We also thank Suzanne Ingrao and Sandra Dumas for all their help in bringing the 10th edition to reality.

ABOUT THE AUTHORS

J T. Black received his Ph.D. from Mechanical and Industrial Engineering, University of Illinois, Urbana in 1969, an M.S. in Industrial Engineering from West Virginia University in 1963 and his B.S. in Industrial Engineering, Lehigh University in 1960. J T. is Professor Emeritus from Industrial and Systems Engineering in the Samuel Ginn College of Engineering at Auburn University. He was the Chairman and a Professor of Industrial and Systems Engineering at The University of Alabama-Huntsville He also taught at The Ohio State University, the University of Rhode Island, the University of Vermont, the University of Illinois and West Virginia University. J T. is a Fellow in the American Society of Mechanical Engineers, the Institute of Industrial Engineering and the Society of Manufacturing Engineers. J loves to write music (mostly down home country) and poetry. Co-authoring with Ron Kohser makes this book a success, just as picking his doubles partner in tennis has given him the #1 doubles ranking for 65 year olds in the State of Alabama.

Ron Kohser received his Ph.D. from the Lehigh University Institute for Metal Forming in 1975. Ron is currently in his 32nd year on the faculty of the University of Missouri-Rolla, where he is a Professor of Metallurgical Engineering and Dean’s Teaching Scholar. While maintaining a full commitment to classroom instruction, he has served as department chair and Associate Dean for Undergraduate Instruction. He currently teaches courses in Metallurgy for Engineers, Introduction to Manufacturing Processes, and Material Selection, Fabrication and Failure Analysis. In addition to the academic responsibilities, Ron and his wife Barb operate *A Miner Indulgence*, a bed-and-breakfast in Rolla, Missouri.

CONTENTS

Chapter 37 Manufacturing Automation (web-based chapter)

(www.wiley.com/college/DeGarmo)

Chapter 38 The Enterprise (web-based chapter)

(www.wiley.com/college/DeGarmo)

Chapter 39 Rapid Prototyping, Tooling And Fabrication (web-based chapter)

(www.wiley.com/college/DeGarmo)

Selected References for Additional Study
(web-based)

CHAPTER 1

INTRODUCTION TO DEGARMO'S MATERIALS AND PROCESSES IN MANUFACTURING

1.1 MATERIALS, MANUFACTURING, AND THE STANDARD OF LIVING

Manufacturing is critical to a country's economic welfare and standard of living because the standard of living in any society is determined, primarily, by the *goods* and *services* that are available to its people. Manufacturing companies contribute about 20% of the GNP, employ about 18% of the workforce, and account for 40% of the exports of the United States. In most cases, materials are utilized in the form of manufactured goods. Manufacturing and assembly represent the organized activities that convert raw materials into salable goods. The manufactured goods are typically divided into two classes: producer goods and consumer goods. *Producer goods* are those goods manufactured for other companies to use to manufacture either producer or consumer goods. *Consumer goods* are those purchased directly by the consumer or the general public. For example, someone has to build the machine tool (a lathe) that produces (using machining processes) the large rolls that are sold to the rolling mill factory to be used to roll the sheets of steel that are then formed (using dies) to become the body panels of your car. Similarly, many service industries depend heavily on the use of manufactured products, just as the agricultural industry is heavily dependent on the use of large farming machines for efficient production.

Converting materials from one form to another adds value to them. The more efficiently materials can be produced and converted into the desired products that function with the prescribed quality, the greater will be the companies' productivity and the better will be the standard of living of the employees.

The history of man has been linked to his ability to work with materials, beginning with the Stone Age and ranging through the eras of copper and bronze, the Iron Age, and recently the age of steel. While ferrous materials still dominate the manufacturing world, we are entering the age of tailor-made plastics, composite materials, and exotic alloys.

A good example of this progression is shown in Figure 1-1. The goal of the manufacturer of any product or service is to continually improve. For a given product or service, this improvement process usually follows an S-shaped curve, as shown in Figure 1-1(a), often called a product life-cycle curve. After the initial invention/creation, a period of rapid growth in performance occurs, with relatively few resources required. However, each improvement becomes progressively more difficult. For a delta gain,

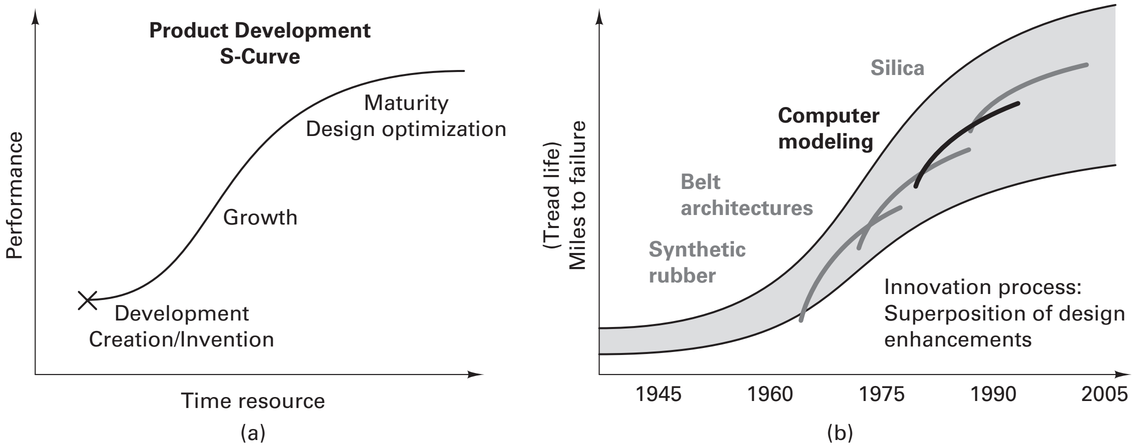

FIGURE 1-1 (a) A product development curve usually has an "S"-shape. (b) Example of the S-curve for the pneumatic radial tire. *(Courtesy of: Bart Thomas, Michelin).*

more money and time and ingenuity are required. Finally, the product or service enters the maturity phase, during which additional performance gains become very costly.

For example, in the automobile tire industry, Figure 1-1b shows the evolution of radial tire performance from its birth in 1946 to the present. Growth in performance is actually the superposition of many different improvements in material, processes, and design.

These innovations, known as *sustaining technology*, serve to continually bring more value to the consumer of existing products and services. In general, sustaining manufacturing technology is the backbone of American industry and the ever-increasing productivity metric.

Although materials are no longer used only in their natural state, there is obviously an absolute limit to the amounts of many materials available here on earth. Therefore, as the variety of man-made materials continues to increase, resources must be used efficiently and recycled whenever possible. Of course, recycling only postpones the exhaustion date.

Like materials, processes have also proliferated greatly in the last 40 years, with new processes being developed to handle the new materials more efficiently and with less waste. A good example is the laser, invented around 1960, which now finds many uses in manufacturing, measurement, inspection, heat treating, welding, and more. New developments in manufacturing technology often account for improvements in productivity. Even when the technology is proprietary, the competition often gains access to it, usually quite quickly.

Starting with the product design, materials, labor, and equipment are interactive factors in manufacturing that must be combined properly (integrated) to achieve low cost, superior quality, and on-time delivery. Typically, as shown in Figure 1-2, 40% of the

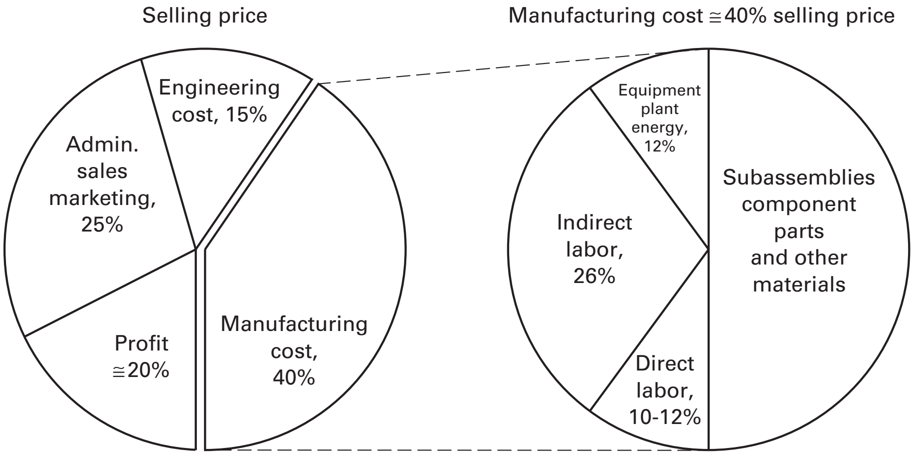

FIGURE 1-2 Manufacturing cost is the largest part of the selling price, usually around 40%. The largest part of the manufacturing cost is materials, usually 50%.

selling price of a product is *manufacturing cost*. Since the selling price is determined by the customer, maintaining profit often depends on reducing manufacturing cost. The internal customers who really make the product, called direct labor, are usually the targets of automation, but typically they account for only about 10% of the manufacturing cost even though they are the main element in increasing productivity. In Chapter 39, a manufacturing strategy is presented that attacks the materials cost, indirect costs, and general administration costs, in addition to labor costs. The materials costs include the cost of storing and handling the materials within the plant. The strategy is called *lean production*.

Referring again to the total expenses shown in Figure 1-2 (selling price less profit), about 68% of dollars are spent on people, the breakdown being about 15% for engineers; 25% for marketing, sales, and general management people; 5% for direct labor, and 10% for indirect labor. The average labor cost in manufacturing in the United States was around $15 per hour for hourly workers in 2000. Reductions in direct labor will have only marginal effects on the total people costs. The optimal combination of factors for producing a small quantity of a given product may be very inefficient for a larger quantity of the same product. Consequently, a systems approach, taking all the factors into account, must be used. *This requires a sound and broad understanding on the part of the decision makers on the value of materials, processes, and equipment to the company, accompanied by an understanding of the manufacturing systems.* Materials and processes in manufacturing systems are what this book is all about.

1.2 MANUFACTURING AND PRODUCTION SYSTEMS

Manufacturing is the economic term for making goods and services available to satisfy human wants. Manufacturing implies creating value by applying useful mental or physical labor. The *manufacturing processes* are collected together to form a *manufacturing system* (MS). The manufacturing system is a complex arrangement of physical elements characterized by measurable parameters (Figure 1-3). The manufacturing system takes inputs and produces products for the external customer.

The entire company is often referred to as the enterprise or, in this textbook, the production system. The production system includes the manufacturing system, as shown in Figure 1-4, and services it. In this book, a *production system* will refer to the total company and will include within it the *manufacturing system (SPSs)*. The production system includes the manufacturing system plus all the other functional areas of the plant for information, design, analysis, and control. These subsystems are connected by various means to each other to produce either goods or services or both.

Goods refer to material things. *Services* are nonmaterial things that we buy to satisfy our wants, needs, or desires. *Service production systems (SPSs)* include transportation, banking, finance, savings and loan, insurance, utilities, health care, education, communication, entertainment, sporting events, and so forth. They are useful labors that do not directly produce a product. Manufacturing has the responsibility for designing processes (sequences of operations and processes) and systems to create (make or

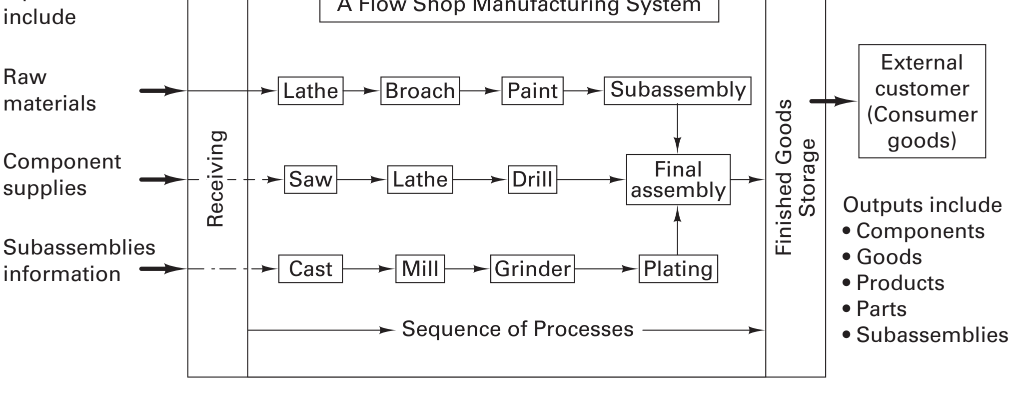

FIGURE 1-3
The manufacturing system converts inputs to outputs using processes to add value to the goods for the external customer.

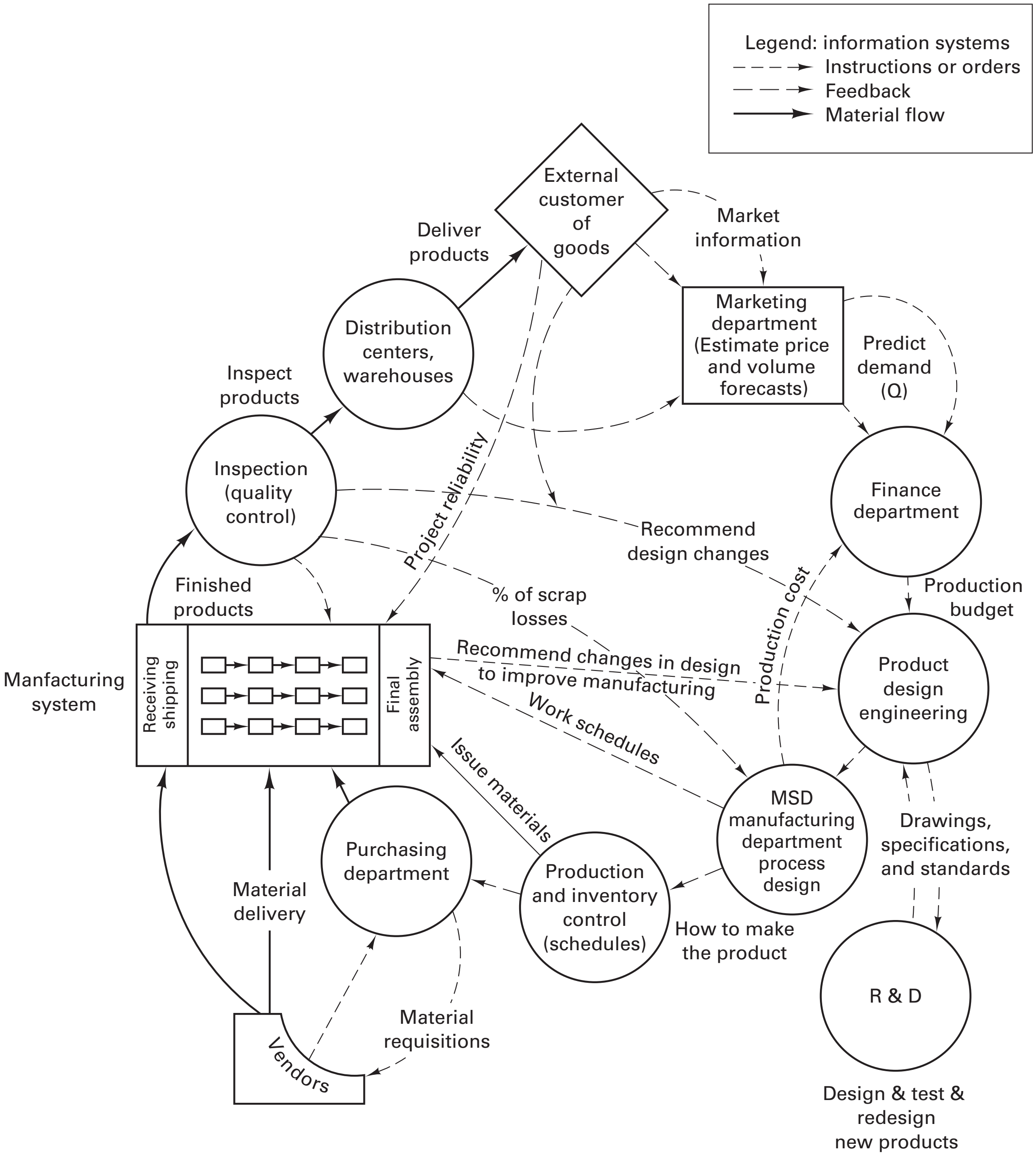

FIGURE 1-4 The functions and systems of the production system, which includes (and services) the manufacturing system. The functional departments are connected by formal and informal information systems designed to service the manufacturing system that produces the goods.

manufacture) the product as designed. The system must exhibit flexibility to meet customer demand (volumes and mixes of products) as well as changes in product design.

As shown in Table 1-1, production terms have a definite rank of importance, somewhat like rank in the army. Confusing *system* with *section* is similar to mistaking a colonel for a corporal. In either case, knowledge of rank is necessary. The terms tend to overlap because of the inconsistencies of popular usage.

An obvious problem exists here in the terminology of manufacturing and production. The same term can refer to different things. For example, *drill* can refer to the machine tool that does these kinds of operations; the operation itself, which can be done on many different kinds of machines; or the cutting tool, which exists in many different forms. It is therefore important to use modifiers whenever possible: "Use the *radial* drill *press* to drill a hole with a 1-in.-diameter spade drill." The emphasis of this book will be

TABLE 1-1 Production Terms for Manufacturing Production Systems

Term	Meaning	Examples
Production system The enterprise	All aspects of workers, machines, and information, considered collectively, needed to manufacture parts or products; integration of all units of the system is critical.	Company that makes engines, assembly plant, glassmaking factory, foundry; sometimes called the enterprise or the business.
Manufacturing system (sequence of operations, collection of processes)	The collection of manufacturing processes and operations resulting in specific end products; an arrangement or layout of many processes, materials-handling equipment, and operators.	Rolling steel plates, manufacturing of automobiles, series of connected operations or processes, a job shop, a flow shop, a continuous process.
Machine or machine tool or manufacturing process	A specific piece of equipment designed to accomplish specific processes, often called a *machine tool;* machine tools linked together to make a manufacturing system.	Spot welding, milling machine, lathe, drill press, forge, drop hammer, die caster, punch press, grinder, etc.
Job (sometimes called a *station*; a collection of tasks)	A collection of operations done on machines or a collection of tasks performed by one worker at one location on the assembly line.	Operation of machines, inspection, final assembly; e.g., forklift driver has the job of moving materials.
Operation (sometimes called a *process*)	A specific action or treatment, often done on a machine, the collection of which makes up the job of a worker.	Drill, ream, bend, solder, turn, face, mill extrude, inspect, load.
Tools or tooling	Refers to the implements used to hold, cut, shape, or deform the work materials; called *cutting tools* if referring to machining; can refer to *jigs* and *fixtures* in workholding and *punches* and *dies* in metal forming.	Grinding wheel, drill bit, end milling cutter, die, mold, clamp, three-jaw chuck, fixture.

directed toward the understanding of the processes, machines, and tools required for manufacturing and how they interact with the materials being processed. In the last section of the book, an introduction to systems aspects is presented.

PRODUCTION SYSTEM—THE ENTERPRISE

The highest-ranking term in the hierarchy is *production system*. A production system includes people, money, equipment, materials and supplies, markets, management, and the manufacturing system. In fact, all aspects of commerce (manufacturing, sales, advertising, profit, and distribution) are involved. Table 1-2 provides a partial list of production systems.

TABLE 1-2 Partial List of Production Systems for Producer and Consumer Goods

Aerospace and airplanes
Appliances
Automotive (cars, trucks, vans, wagons, etc.)
Beverages
Building supplies (hardware)
Cement and asphalt
Ceramics
Chemicals and allied industries
Clothing (garments)
Construction
Construction materials (brick, block, panels)
Drugs, soaps, cosmetics
Electrical and microelectronics
Energy (power, gas, electric)
Engineering
Equipment and machinery (agricultural, construction and electrical products, electronics, household products, industrial machine tools, office equipment, computers, power generators)
Foods (canned, dairy, meats, etc.)
Footwear
Furniture
Glass
Hospital suppliers
Leather and fur goods
Machines
Marine engineering
Metals (steel, aluminum, etc.)
Natural resources (oil, coal, forest, pulp and paper)
Publishing and printing (books, CDs, newspapers)
Restaurants
Retail (food, department stores, etc.)
Ship building
Textiles
Tire and rubber
Tobacco
Transportation vehicles (railroad, airline, truck, bus)
Vehicles (bikes, cycles, ATVs, snowmobiles)

TABLE 1-3 Types of Service Industries

Advertising and marketing
Communication (telephone, computer networks)
Education
Entertainment (radio, TV, movies, plays)
Equipment and furniture rental
Financial (banks, investment companies, loan companies)
Health care
Insurance
Transportation and car rental
Travel (hotel, motel, cruise lines)

Much of the information given *for manufacturing production systems* (MPSs) is relevant to the *service production system*. Many MPSs require an SPS for proper product sales. This is particularly true in industries, such as the food (restaurant) industry, in which customer service is as important as quality and on-time delivery. Table 1-3 provides a short list of service industries.

MANUFACTURING SYSTEMS

A collection of operations and processes used to obtain a desired product(s) or component(s) is called a *manufacturing system*. The manufacturing system is therefore the design or *arrangement of the manufacturing processes*. Control of a system applies to overall control of the whole, not merely of the individual processes or equipment. The entire manufacturing system must be controlled in order to schedule and control production, inventory levels, product quality, output rates, and so forth.

MANUFACTURING PROCESSES

A *manufacturing process* converts unfinished materials to finished products, often using machines or machine tools. For example, injection molding, die casting, progressive stamping, milling, arc welding, painting, assembling, testing, pasteurizing, homogenizing, and annealing are commonly called *processes* or *manufacturing processes*. The term *process* often implies a sequence of steps, processes, or operations for production of goods and services, as shown in Figure 1-5, which shows the processes to manufacture an Olympic-type medal.

A *machine tool* is an assembly of related mechanisms on a frame or bed that together produce a desired result. Generally, motors, controls, and auxiliary devices are included. Cutting tools and workholding devices are considered separately.

A machine tool may do a single process (e.g., cutoff saw) or multiple processes, or it may manufacture an entire component. Machine sizes vary from a tabletop drill press to a 1000-ton forging press.

JOB AND STATION

In the classical manufacturing system, a *job* is the total of the work or duties a worker performs. A station is a location or area where a production worker performs tasks or his job.

A job is a group of related operations and tasks performed at one station or series of stations in cells. For example, the job at a final assembly station may consist of four tasks:

1. Attach carburetor.
2. Connect gas line.
3. Connect vacuum line.
4. Connect accelerator rod.

The job of a turret lathe (a semiautomatic machine) operator may include the following operations and tasks: load, start, index and stop, unload, inspect. The operator's job may also include setting up the machine (i.e., getting ready for manufacturing). Other machine operations include drilling, reaming, facing, turning, chamfering, and knurling. The operator can run more than one machine or service at more than one station.

The terms *job* and *station* have been carried over to unmanned machines. A job is a group of related operations generally performed at one station, and a *station* is a position or location in a machine (or process) where specific operations are performed. A simple machine may have only one station. Complex machines can be composed of many stations. The job at a station often includes many simultaneous operations, such as "drill all five holes" by multiple spindle drills. In the planning of a job, a process plan is often developed (by the engineer) to describe how a component is made using a

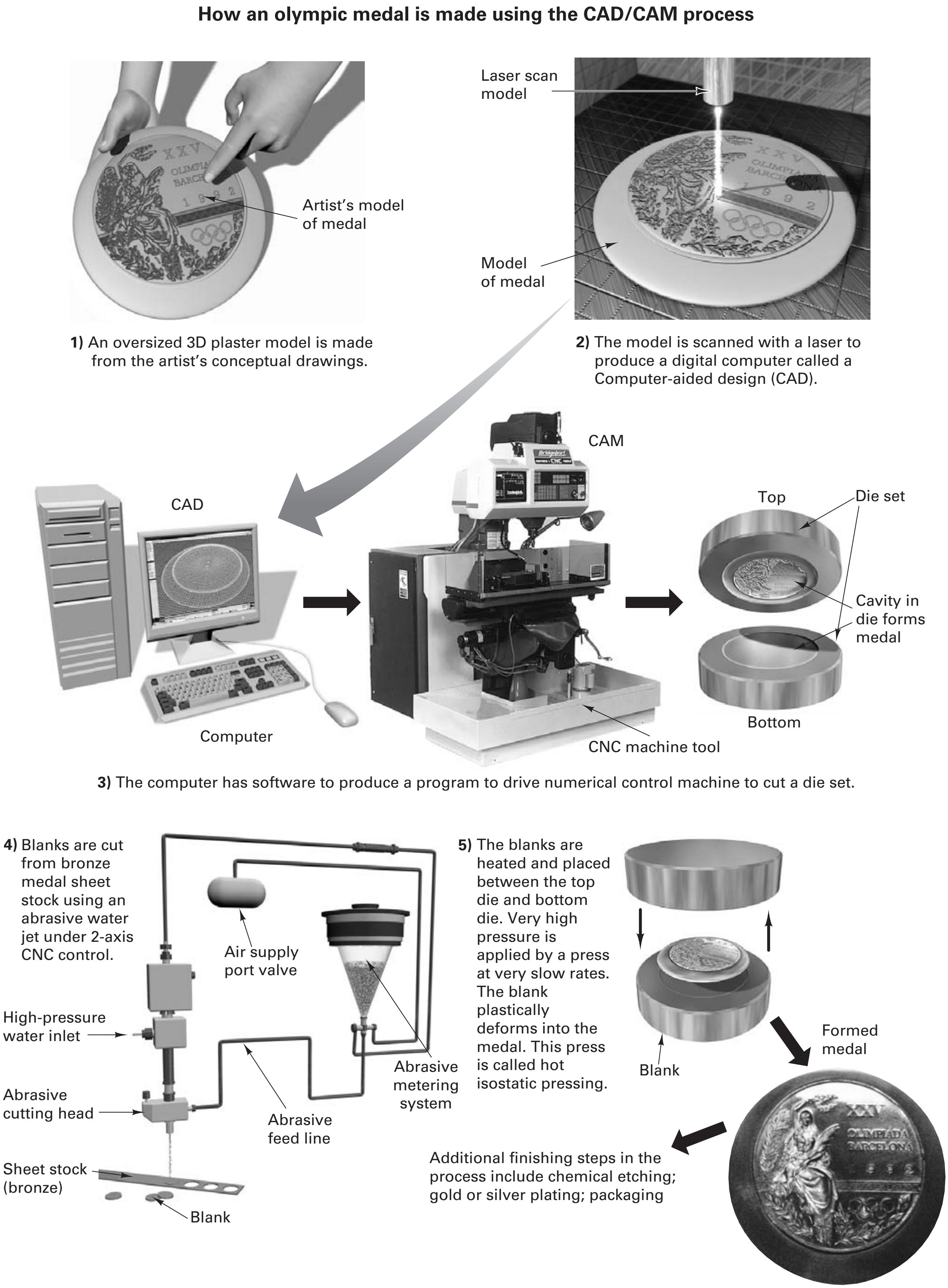

How an olympic medal is made using the CAD/CAM process

1) An oversized 3D plaster model is made from the artist's conceptual drawings.

2) The model is scanned with a laser to produce a digital computer called a Computer-aided design (CAD).

3) The computer has software to produce a program to drive numerical control machine to cut a die set.

4) Blanks are cut from bronze medal sheet stock using an abrasive water jet under 2-axis CNC control.

5) The blanks are heated and placed between the top die and bottom die. Very high pressure is applied by a press at very slow rates. The blank plastically deforms into the medal. This press is called hot isostatic pressing.

Additional finishing steps in the process include chemical etching; gold or silver plating; packaging

FIGURE 1-5 The manufacturing process for making Olympic medals has many steps or operations, beginning with design and including die making.

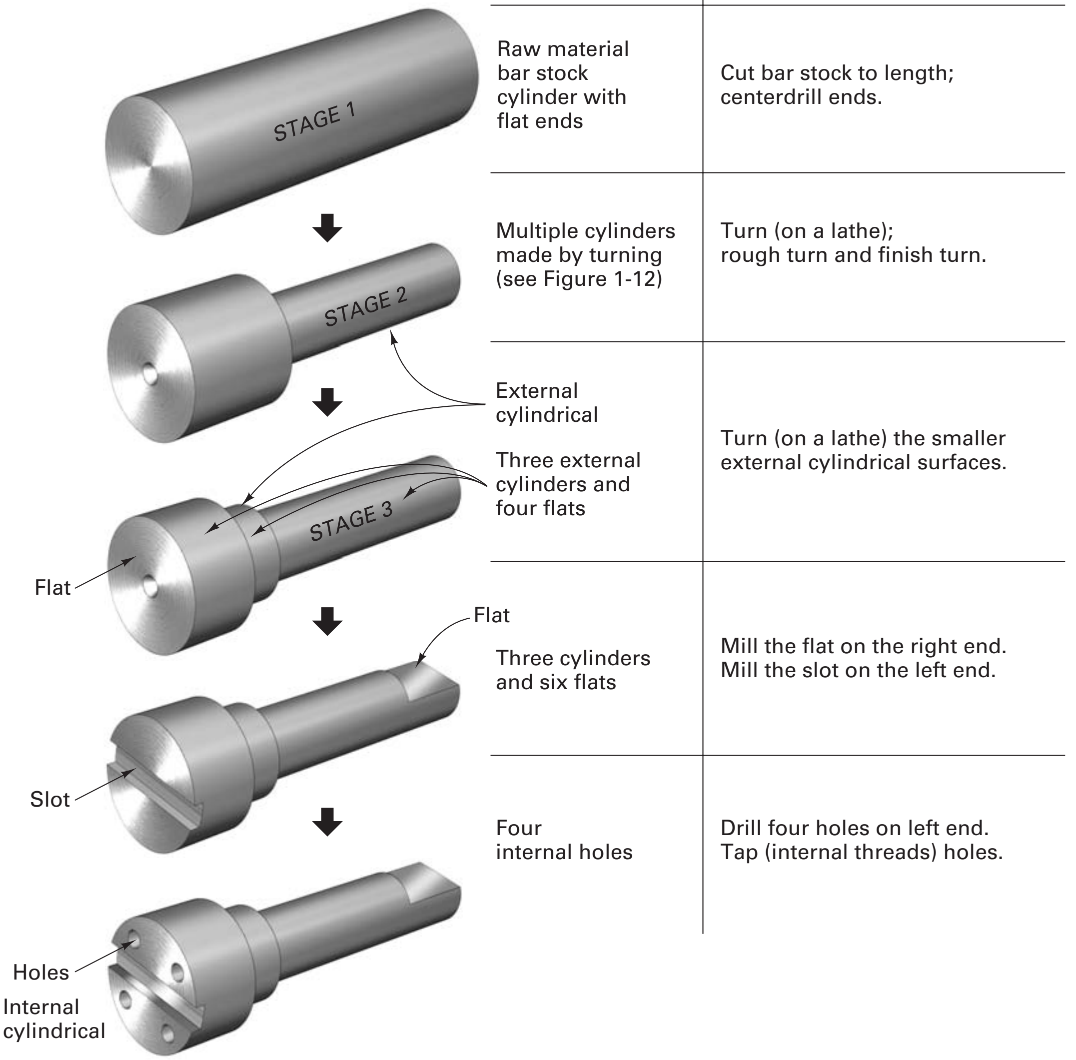

	Simplified Sequence of Operations
Raw material bar stock cylinder with flat ends	Cut bar stock to length; centerdrill ends.
Multiple cylinders made by turning (see Figure 1-12)	Turn (on a lathe); rough turn and finish turn.
External cylindrical Three external cylinders and four flats	Turn (on a lathe) the smaller external cylindrical surfaces.
Three cylinders and six flats	Mill the flat on the right end. Mill the slot on the left end.
Four internal holes	Drill four holes on left end. Tap (internal threads) holes.

FIGURE 1-6 The component called a pinion shaft is manufactured by a "sequence of operations" to produce various geometric surfaces. The engineer figures out the sequence and selects the tooling to perform the steps.

sequence of operation. So, for example, the part shown in Figure 1-6 is produced by a set of machining operations. This information can be embedded in a CNC program, as shown in Figure 1-5.

OPERATION

An *operation* is a distinct action performed to produce a desired result or effect. Typical manual machine operations are loading and unloading. Operations can be divided into suboperational elements. For example, loading is made up of picking up a part, placing part in jig, closing jig. However, suboperational elements will not be discussed here.

Operations categorized by function are:

1. *Materials handling and transporting*: change in position of the product
2. *Processing*: change in volume and quality, including assembly and disassembly; can include packaging
3. *Packaging*: special processing; may be temporary or permanent for shipping
4. *Inspecting and testing*: comparison to the standard or check of process behavior
5. *Storing*: time lapses without further operations

These basic operations may occur more than once in some processes, or they may sometimes be omitted. *Remember, it is the manufacturing processes that change the value and quality of the materials*. Defective processes produce poor quality or scrap. Other operations may be necessary but do not, in general, add value, whereas operations performed by machines that do material processing usually do add value.

TREATMENTS

Treatments operate continuously on the workpiece. They usually alter or modify the product-in-process without tool contact. Heat treating, curing, galvanizing, plating, finishing, (chemical) cleaning, and painting are examples of treatments. Treatments usually add value to the part.

These processes are difficult to include in cells because they often have long cycle times, are hazardous to the workers' health, or are unpleasant to be around because of high heat or chemicals. They are often done in large tanks or furnaces or rooms. The cycle time for these processes may *dictate* the cycle times for the entire system. These operations also tend to be material specific. Many manufactured products are given decorative and protective surface treatments that control the finished appearance. A customer may not buy a new vehicle because it has a visible defect in the chrome bumper, although this defect will not alter the operation of the car.

TOOLS, TOOLING, AND WORKHOLDERS

The lowest mechanism in the production term rank is the *tool*. Tools are used to hold, cut, shape, or form the unfinished product. Common hand tools include the saw, hammer, screwdriver, chisel, punch, sandpaper, drill, clamp, file, torch, and grindstone.

Basically, machines are mechanized versions of such hand tools and are called cutting tools. Some examples of tools for cutting are drill bits, reamers, single-point turning tools, milling cutters, saw blades, broaches, and grinding wheels. Noncutting tools for forming include extrusion dies, punches, and molds.

Tools also include workholders, jigs, and fixtures. These tools and cutting tools are generally referred to as the *tooling*, which usually must be considered (purchased) separate from machine tools. Cutting tools wear and fail and must be periodically replaced before parts are ruined. The workholding devices must be able to locate and secure the workpieces during processing in a repeatable, mistake-proof way.

TOOLING FOR MEASUREMENT AND INSPECTION

Measuring tools and instruments are also important for manufacturing. Common examples of measuring tools are rulers, calipers, micrometers, and gages. Precision devices that use laser optics or vision systems coupled with sophisticated electronics are becoming commonplace. Vision systems and coordinate measuring machines are becoming critical elements for achieving superior quality.

INTEGRATING INSPECTION INTO THE PROCESS

The integration of the *inspection* process into the manufacturing process or the manufacturing system is a critical step toward building products of superior quality. An example will help. Compare an electric typewriter with a computer that does word processing. The electric typewriter is flexible. It types whatever words are wanted in whatever order. It can type in Pica, Elite, or Orator, but the font (disk or ball that has the appropriate type size on it) has to be changed according to the size and face of type wanted. The computer can do all of this but can also, through its software, do italics, darken the words, vary the spacing to justify the right margin, plus many other functions. It checks immediately for incorrect spelling and other defects like repeated words. The software system provides a signal to the hardware to flash the word so that the operator will know something is wrong and can make an immediate correction. If the system were designed to prevent the typist from typing repeated words, then this would be a *poka-yoke*, a defect prevention. Defect prevention is better than immediate defect detection and correction. Ultimately, the system should be able to forecast the probability of a defect, correcting the problem at the source. This means that the typist would have to be removed from the process loop, perhaps by having the system type out what it is told (convert oral to written directly). Poka-yoke devices and source inspection techniques are keys to designing manufacturing systems that produce superior-quality products at low cost.

PRODUCTS AND FABRICATIONS

In manufacturing, material things (goods) are made to satisfy human wants. *Products* result from manufacture. Manufacture also includes conversion processes such as refining, smelting, and mining.

Products can be manufactured by fabricating or by processing. *Fabricating* is the manufacture of a product from pieces such as parts, components, or assemblies. Individual products or parts can also be fabricated. Separable discrete items such as tires, nails, spoons, screws, refrigerators, or hinges are fabricated.

Processing is also used to refer to the manufacture of a product by continuous means, or by a continuous series of operations, for a specific purpose. Continuous items such as steel strip, beverages, breakfast foods, tubing, chemicals, and petroleum are "processed." Many processed products are marketed as discrete items, such as bottles of beer, bolts of cloth, spools of wire, and sacks of flour.

Separable discrete products, both piece parts and assemblies, are fabricated in a *plant*, *factory*, or *mill*, for instance, a textile or rolling mill. Products that *flow* (liquids, gases, grains, or powders) are processed in a *plant* or *refinery*. The *continuous-process industries* such as petroleum and chemical plants are sometimes called processing industries or flow industries.

To a lesser extent, the terms *fabricating industries* and *manufacturing industries* are used when referring to fabricators or manufacturers of large products composed of many parts, such as a car, a plane, or a tractor. Manufacturing often includes continuous-process treatments such as electroplating, heating, demagnetizing, and extrusion forming.

Construction or building is making goods by means other than manufacturing or processing in factories. Construction is a form of project manufacturing of useful goods like houses, highways, and buildings. The public may not consider construction as manufacturing because the work is not usually done in a plant or factory, but it can be. There is a company in Delaware that can build a custom house of any design in its factory, truck it to the building site, and assemble it on a foundation in two or three weeks.

Agriculture, *fisheries*, and *commercial fishing* produce real goods from useful labor. Lumbering is similar to both agriculture and mining in some respects, and mining should be considered processing. Processes that convert the raw materials from agriculture, fishing, lumbering, and mining into other usable and consumable products are also forms of manufacturing.

WORKPIECE AND ITS CONFIGURATION

In the manufacturing of goods, the primary objective is to produce a component having a desired geometry, size, and finish. Every component has a shape that is bounded by various types of surfaces of certain sizes that are spaced and arranged relative to each other. Consequently, a component is manufactured by producing the surfaces that bound the shape. Surfaces may be:

1. Plane or flat
2. Cylindrical (external or internal)
3. Conical (external or internal)
4. Irregular (curved or warped)

Figure 1-6 illustrates how a shape can be analyzed and broken up into these basic bounding surfaces. Parts are manufactured by using a set or sequence of processes that will either (1) remove portions of a rough block of material (bar stock, casting, forging) so as to produce and leave the desired bounding surface, or (2) cause material to form into a stable configuration that has the required bounding surfaces (casting, forging). Consequently, in designing an object, the designer specifies the shape, size, and arrangement of the bounding surface. The part design must be analyzed to determine what materials will provide the desired properties, including mating to other components, and what processes can best be employed to obtain the end product at the most reasonable cost. This is often the job of the manufacturing engineer.

ROLES OF ENGINEERS IN MANUFACTURING

Many engineers have as their function the designing of products. The products are brought into reality through the processing or fabrication of materials. In this capacity designers are a key factor in the material selection and manufacturing procedure. A *design engineer*, better than any other person, should know what the design is to accomplish, what assumptions can be made about service loads and requirements, what service environment the product must withstand, and what appearance the final product is to have. To meet these requirements, the material(s) to be used must be selected and specified. In most cases, to utilize the material and to enable the product to have the desired form, the designer knows that certain *manufacturing processes* will have to be employed. In many instances, the selection of a specific material may dictate what processing must be used. On the other hand, when certain processes must be used, the design may have to be modified in order for the process to be utilized effectively and economically. Certain dimensional sizes can dictate the processing, and some processes require certain sizes for the parts going into them. In converting the design into reality, many decisions must be made. In most instances, they can be made most effectively at the design stage. It is thus apparent that design engineers are a vital factor in the manufacturing process, and it is indeed a blessing to the company if they can *design for manufacturing*, that is, design the product so that it can be manufactured and/or *assembled* economically (i.e., at low unit cost). Design for manufacturing uses the knowledge of manufacturing processes, and so the design and manufacturing engineers should work together to integrate design and manufacturing activities.

Manufacturing engineers select and coordinate specific processes and equipment to be used, or supervise and manage their use. Some design special tooling is used so that standard machines can be utilized in producing specific products. These engineers must have a broad knowledge of manufacturing processes and material behavior so that desired operations can be done effectively and efficiently without overloading or damaging machines and without adversely affecting the materials being processed. Although it is not obvious, the most hostile environment the material may ever encounter in its lifetime is the processing environment.

Industrial or *manufacturing engineers* are responsible for manufacturing systems design (or layout) of factories. They must take into account the interrelationships of the design and the properties of the materials that the machines are going to process as well as the interreaction of the materials and processes. The choice of machines and equipment used in manufacturing and their arrangement in the factory are also design tasks.

Materials engineers devote their major efforts to developing new and better materials. They, too, must be concerned with how these materials can be processed and with the effects that the processing will have on the properties of the materials. Although their roles may be quite different, it is apparent that a large proportion of engineers must concern themselves with the interrelationships of materials and manufacturing processes.

As an example of the close interrelationship of design, materials selection, and the selection and use of manufacturing processes, consider the common desk stapler. Suppose that this item is sold at the retail store for $20. The wholesale outlet sold the stapler for $16 and the manufacturer probably received about $10 for it. Staplers typically consist of 10 to 12 parts and some rivets and pins. Thus the manufacturer had to produce and assemble the 10 parts for about $1 per part. Only by giving a great deal of attention to design, selection of materials, selection of processes, selection of equipment used for manufacturing (tooling), and utilization of personnel could such a result be achieved.

The stapler is a relatively simple product, yet the problems involved in its manufacture are typical of those that manufacturing industries must deal with. The elements of design, materials, and processes are all closely related, each having its effect on the performance of the device and the other elements. For example, suppose the designer calls for the component that holds the staples to be a metal part. Will it be a machined part rather than a formed part? Entirely different processes and materials need to be specified depending on the choice. Or, if a part is to be changed from metal to plastic, then a whole new set of fundamentally different materials and processes would need to come into play. Such changes would also have a significant impact on cost.

CHANGING WORLD COMPETITION

In recent years, major changes in the world of goods manufacturing have taken place. Three of these are:

1. Worldwide competition for global products and their manufacture
2. High-tech manufacturing or advanced technology
3. New manufacturing systems designs, strategies, and management

Worldwide (global) competition is a fact of manufacturing life, and it will get stronger in the future. The goods you buy today may have been made anywhere in the world. The second aspect, advanced manufacturing technology, usually refers to new machine tools or processes with computer-aided manufacturing. Producing machine tools is a small industry with enormous leverage. Improved processes lead to better components and more durable goods. However, the new technology is often purchased from companies that have developed the technology, so this approach is important but may not provide a unique competitive advantage if your competitors can also buy the technology, provided that they have the capital. Some companies develop their own unique process technology and try to keep it proprietary as long as they can. A good example of unique process technology is the numerical control machine tool, shown in Figure 1-5 and discussed in Chapter 27. Computer-controlled machines are now common to the factory floor.

The third change and perhaps the real key to success in manufacturing is to build a manufacturing system that can deliver, on time to the customer, super-quality goods at the lowest possible cost in a flexible way. This change reflects an effort to improve markedly the methodology by which goods are produced rather than simply upgrading the manufacturing process technology.

Manufacturing system design is discussed extensively in the last section of the book, and we recommend that students examine this material closely after they have gained a working knowledge of materials and processes. The next section provides a brief introduction to manufacturing system designs.

MANUFACTURING SYSTEM DESIGNS

Five manufacturing system designs can be identified: the job shop, the flow shop, the linked-cell shop, the project shop, and the continuous process. The latter system primarily deals with liquids and/or gases (such as an oil refinery) rather than solids or discrete parts.

The most common of these layouts is the *job shop*, characterized by large varieties of components, general-purpose machines, and a functional layout (Figure 1-7). This means that machines are collected by function (all lathes together, all broaches together, all milling machines together) and the parts are routed around the shop in small lots to the various machines. The inset shows the multiple paths through the shop and a detail on one of the seven broaching machine tools. The material is moved from machine to machine in carts or containers and is called the *lot or batch*.

Flow shops are characterized by larger volumes of the same part or assembly, special-purpose machines and equipment, less variety, and more mechanization. Flow shop layouts are typically either continuous or interrupted and can be for manufacturing or assembly, as shown in Figure 1-8. If *continuous*, a production line is built that basically runs one large-volume complex item in great quantity and nothing else. The common light bulb is made this way. A transfer line producing an engine block is another typical

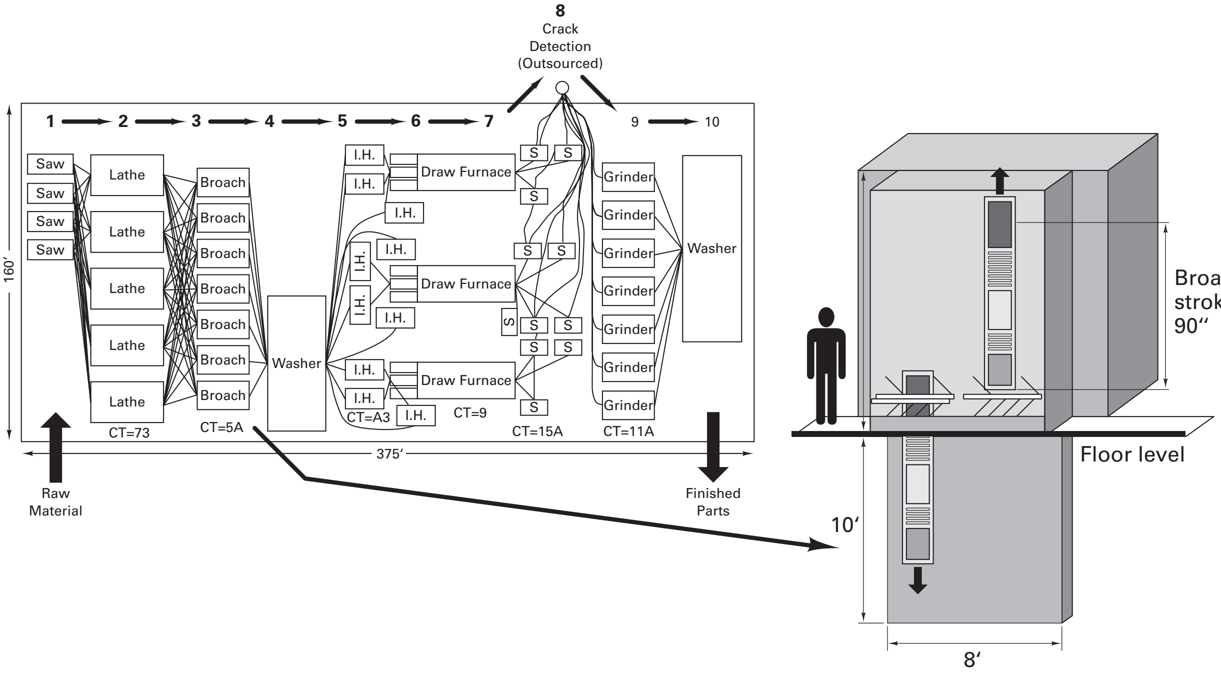

FIGURE 1-7 This rack bar machining area is functionally designed so it operates like a job shop, with lathes, broaches, and grinders lined up.

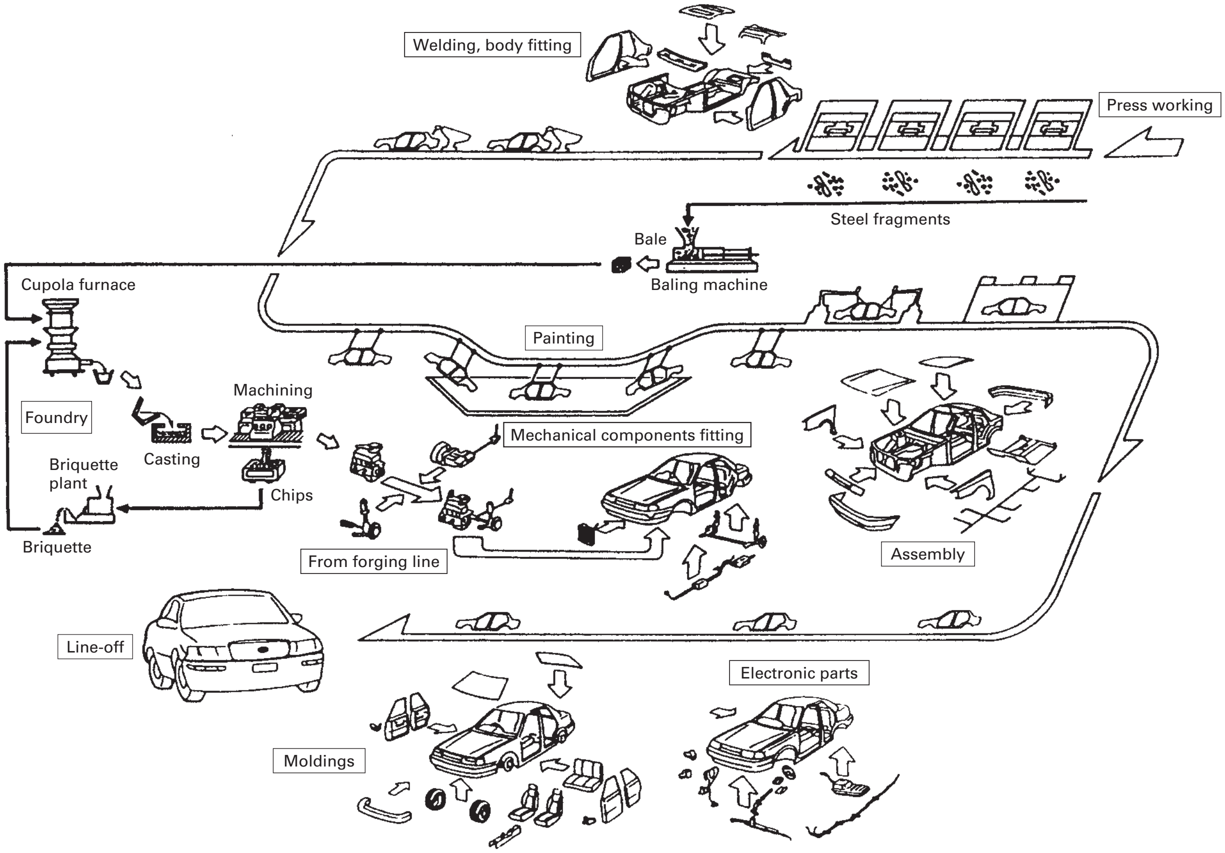

FIGURE 1-8 The moving assembly line for cars is an example of the flow shop.

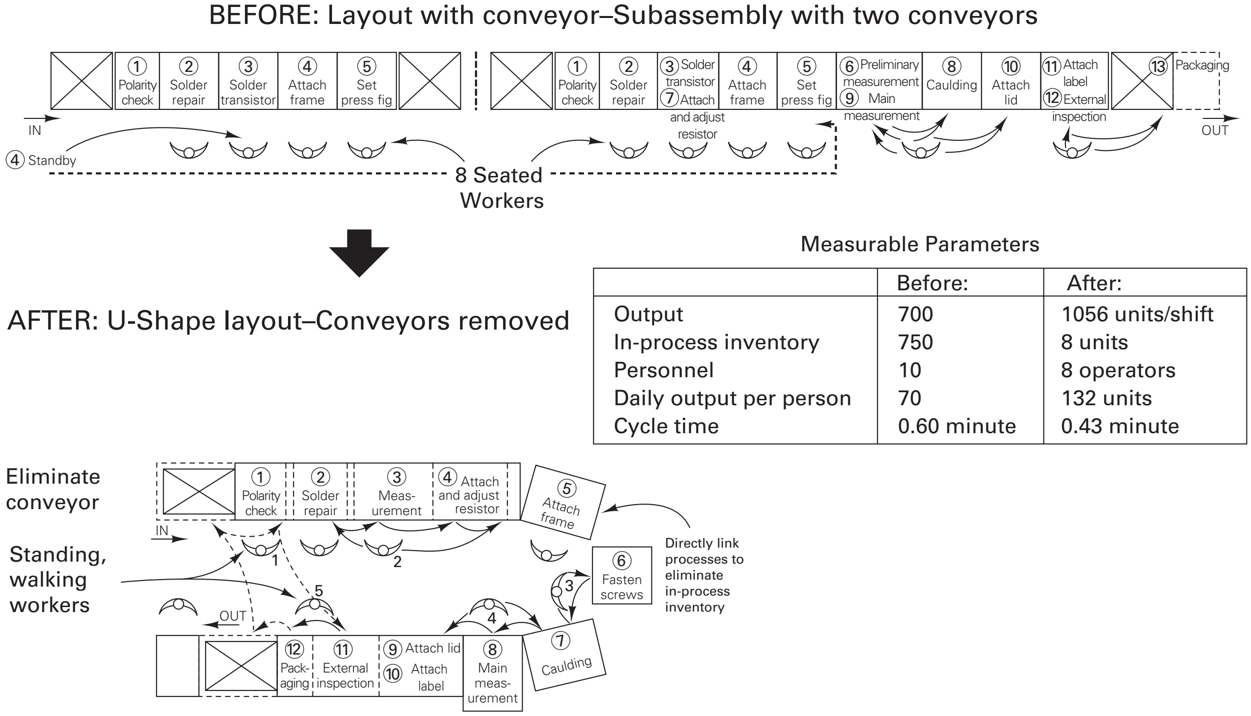

Measurable Parameters

	Before:	After:
Output	700	1056 units/shift
In-process inventory	750	8 units
Personnel	10	8 operators
Daily output per person	70	132 units
Cycle time	0.60 minute	0.43 minute

FIGURE 1-9 The traditional subassembly lines can be redesigned into U-shaped cells as part of the conversion of mass production to lean production.

example. If *interrupted*, the line manufactures large lots but is periodically "changed over" to run a similar but different component.

The *linked-cell* manufacturing system (L-CMS) is composed of manufacturing and subassembly cells (Figure 1-9) connected to final assembly (linked) using a unique form of inventory and information control called *kanban*. The L-CMS is used in lean production systems where manufacturing processes and subassemblies are restructured into U-shaped cells so they can operate on a one-piece-flow basis, like final assembly.

The *project shop* is characterized by the immobility of the item being manufactured. In the construction industry, bridges and roads are good examples. In the manufacture of goods, large airplanes, ships, large machine tools, and locomotives are manufactured in project shops. It is necessary that the workers, machines, and materials come to the site. The number of end items is not very large, and therefore the lot sizes of the components going into the end item are not large. Thus the job shop usually supplies parts and subassemblies to the project shop in small lots.

Continuous processes are used to manufacture liquids, oils, gases, and powders. These manufacturing systems are usually large plants producing goods for other producers or mass-producing canned or bottled goods for consumers. The manufacturing engineer in these factories is often a chemical engineer.

Naturally, there are many hybrid forms of these manufacturing systems, but the job shop is the most common system. Because of its design, the job shop has been shown to be the least cost-efficient of all the systems. Component parts in a typical job shop spend only 5% of their time in machines and the rest of the time waiting or being moved from one functional area to the next. Once the part is on the machine, it is actually being processed (i.e., having value added to it by the changing of its shape) only about 30% to 40% of the time. The rest of the time parts are being loaded, unloaded, inspected, and so on. The advent of *numerical control* machines increased the percentage of time that the machine is making chips because tool movements are programmed and the machines can automatically change tools or load or unload parts.

However, there are a number of trends that are forcing manufacturing management to consider means by which the job shop system itself can be redesigned to improve its overall efficiency. These trends have forced manufacturing companies to convert their batch-oriented job shops into linked-cell manufacturing systems, with the manufacturing and subassembly cells structured around specific products. Another way to identify families of products with a similar set of manufacturing processes is called group technology.

Group technology (GT) can be used to restructure the factory floor. GT is a concept whereby similar parts are grouped together into part families. Parts of similar size and shape can often be processed through a *similar set of processes*. A part family based on manufacturing would have the same set or sequences of manufacturing processes. The set of processes is called a cell. Thus, with GT, job shops can be restructured into cells, each cell specializing in a particular family of parts. The parts are handled less, machine setup time is shorter, in-process inventory is lower, and the time needed for parts to get through the manufacturing system (called the throughput time) is greatly reduced.

BASIC MANUFACTURING PROCESSES

It is the manufacturing processes that create or add value to a product. The manufacturing processes can be classified as:

- Casting, foundry, or molding processes
- Forming or metalworking processes
- Machining (material removal) processes
- Joining and assembly
- Surface treatments (finishing)
- Rapid prototyping
- Heat treating
- Other

These classifications are not mutually exclusive. For example, some finishing processes involve a small amount of metal removal or metal forming. A laser can be used either for joining or for metal removal or heat treating. Occasionally, we have a process such as shearing, which is really metal cutting but is viewed as a (sheet) metalforming process. Assembly may involve processes other than joining. The categories of process types are far from perfect.

Casting and *molding* processes are widely used to produce parts that often require other follow-on processes, such as machining. Casting uses molten metal to fill a cavity. The metal retains the desired shape of the mold cavity after solidification. An important advantage of casting and molding is that, in a single step, materials can be converted from a crude form into a desired shape. In most cases, a secondary advantage is that excess or scrap material can easily be recycled. Figure 1-10 illustrates schematically some of the basic steps in the lost-wax casting process, one of many processes used in the foundry industry.

Casting processes are commonly classified into two types: permanent mold (a mold can be used repeatedly) or nonpermanent mold (a new mold must be prepared for each casting made). Molding processes for plastics and composites are included in the chapters on forming processes.

Forming and *shearing* operations typically utilize material (metal or plastics) that has been previously cast or molded. In many cases the materials pass through a series of forming or shearing operations, so the form of the material for a specific operation may be the result of all the prior operations. The basic purpose of forming and shearing is to modify the shape and size and/or physical properties of the material.

Metalforming and *shearing operations* are done both “hot” and “cold,” a reference to the temperature of the material at the time it is being processed with respect to the

The Lost-Wax Casting Process

The most common casting method through the ages was flit *cire-perdue* or lost-wax process. Although expensive and time consuming, the lost-way method allows the artist to accurately reproduce the delicate nuances of the original model.

Models depicting the casting of Rodin's *Sorrow* (1889).

1

The artist creates a sculpted model, generally made of plaster, clay, marble, stone, or wood.

2

The surface of the model is coated with a protective substance. Then the model is put into a bed of very fine elastic material held in place by a rigid outer mold. When the model is removed, its impression remains.

3

Fireproof clay is carefully put into the impression. making a sharply defined duplicate of the artist's original model.

4

The surface of this second clay model is slightly scraped away. When this second model is returned to the mold, there is a gap between the model and the mold. This gap is where the wax will be poured. The final bronze will be of the same thickness as the gap that is created by the scraping.

5

After closing the mold around the clay model, hot wax is poured into the gap between the model and the mold. This stage is crucial in producing a perfect reproduction of the initial sculpture. The result is a clay model covered with wax, which is then hand-finished to fidelity, incorporating the artist's signature, cast number and a foundry seal.

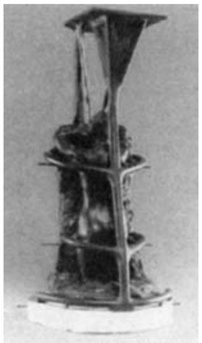

6

A network of wax pipes, called sprues and gates. is attached to the wax model. These pipes will allow the wax to escape as it melts. The pipes will also spread the molten metal evenly throughout the mold and will let air escape as the metal is poured in.

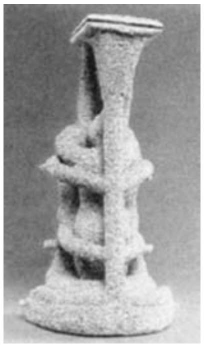

7

A finely granulated ceramic is applied to the surface of the model and its pipes until it becomes thick and coarse. The result, now called an "investment mold," is then dried and heated causing the wax to melt and flow out of the mold. leaving a space between the fire resistant clay model and the investment mold. Accordingly, this method is called the "lost-wax process."

8

The investment mold is then heated to a high temperature (over 1,000 °F). Except for a place to pour in the liquid bronze at the top, the mold is covered with a layer of cladding (a protective metal coating), which must be completely dry before bronze pouring begins.

9

Molten bronze (over 2,000 °F) is then poured into the investment mold filling the space left by the "lost" wax. When everything has cooled, the cladding and investment mold are broken and the metal appears. The bronze sculpture and its sprues and gates are an exact reproduction of the wax in step six.

10

The network of sprues and gates is then removed and the surface of the bronze is often chiseled and filed so that no trace of them can be seen. This process of hand-finishing the bronze to perfection is called "chasing." Any remains of the fireproof clay model left inside the bronze are also removed now.

11

When the chasing is finished, hot or cold oxides are applied to the surface of the bronze, creating a thin layer of corrosion. This layer -slightly brown, green, or blue in color-is called the "patina:" The patina protects and enlivens the surface of the bronze.

FIGURE 1-10 A manufacturing process represents a sequence of steps. Here are the steps in the lost-wax casting process.

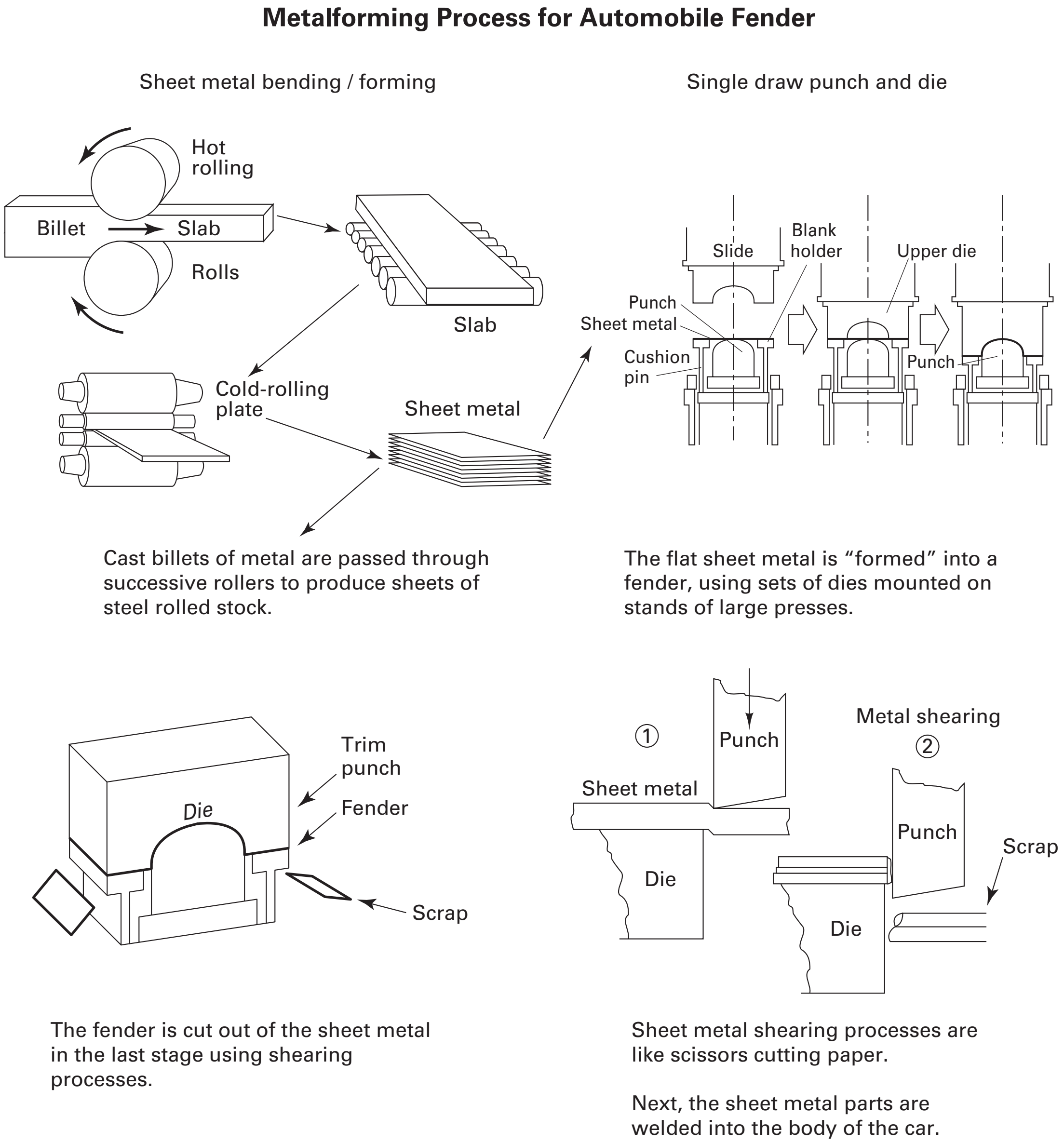

Metalforming Process for Automobile Fender

Cast billets of metal are passed through successive rollers to produce sheets of steel rolled stock.

The flat sheet metal is “formed” into a fender, using sets of dies mounted on stands of large presses.

The fender is cut out of the sheet metal in the last stage using shearing processes.

Sheet metal shearing processes are like scissors cutting paper.

Next, the sheet metal parts are welded into the body of the car.

FIGURE 1-11 The forming process used to make a fender for a car.

temperature at which this material can recrystallize (i.e., grow new grain structure). Figure 1-11 shows the process by which the fender of a car is made using a series of metalforming processes.

Machining or *metal removal processes* refer to the removal of certain selected areas from a part in order to obtain a desired shape or finish. Chips are formed by interaction of a cutting tool with the material being machined. Figure 1-12 shows a chip being formed by a single-point cutting tool in a machine tool called a lathe. The manufacturing engineer may be called upon to specify the cutting parameters such as cutting speed, feed, or depth of cut (DOC). The engineer may also have to select the cutting tools for the job.

Cutting tools used to perform the basic turning on the lathe are shown in Figure 1-12. The cutting tools are mounted in machine tools, which provide the required movements of the tool with respect to the work (or vice versa) to accomplish the process desired. In recent years many new machining processes have been developed.

The seven basic machining processes are *shaping*, *drilling*, *turning*, *milling*, *sawing*, *broaching*, and *abrasive machining*. With the exception of shaping, each of the basic processes has a chapter dedicated to it. Historically, eight basic types of machine tools

The Machining Process
(turning on a lathe)

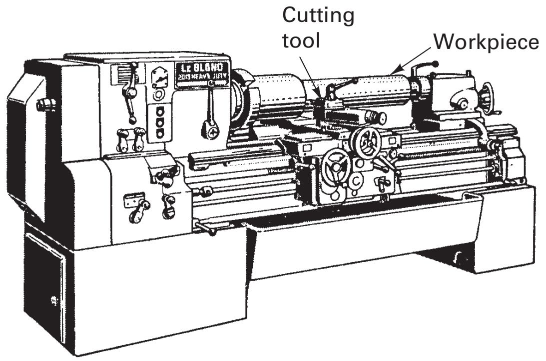

The workpiece is mounted in a machine tool (lathe) with a cutting tool.

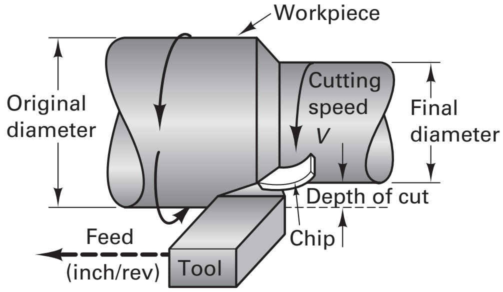

The workpiece is rotated while the tool is fed at some feed rate (inches per revolution). The desired cutting speed *V* determines the rpm of the workpiece. This process is called turning.

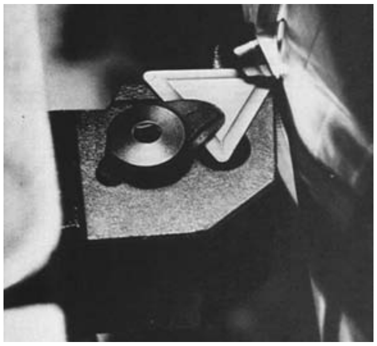

The cutting tool interacts with the workpiece to form a chip by a shearing process. The tool shown here is an indexable carbide insert tool with a chip-breaking groove.

FIGURE 1-12 Single-point metalcutting process (turning) produces a chip while creating a new surface on the workpiece.

have been developed to accomplish the basic processes. These machine tools are called shapers (and planers), drill presses, lathes, boring machines, milling machines, saws, broaches, and grinders. Most of these machine tools are capable of performing more than one of the basic machining processes. Shortly after numerical control was invented, *machining centers* were developed that could combine many of the basic processes, plus other related processes, into a single machine tool with a single workpiece setup. Included with the machining processes are processes wherein metal is removed by chemical, electrical, electrochemical, or thermal sources. Generally speaking, these nontraditional processes have evolved to fill a specific need when conventional processes were too expensive or too slow when machining very hard materials. One of the first uses of a laser was to machine holes in ultra-high-strength metals. Lasers are being used today to drill tiny holes in turbine blades for jet engines. Because of its ability to produce components with great precision and accuracy, metalcutting, using machine tools, is recognized as having great value-adding capability.

In recent years a new family of processes has emerged called *rapid prototyping*. These additive-type processes produce first, or prototype, components directly from the software using specialized machines driven by computer-aided design packages. The prototypes can be field tested and modifications to the design quickly implemented. Early versions of these machines produced only nonmetalic components, but modern machines can make metal parts. In contrast, the machining processes are recognized as having great *value-adding capability*, that is, the ability to produce components with great precision and accuracy.

Perhaps the largest collection of processes, in terms of both diversity and quantity, are the *joining processes*, which include the following:

1. Mechanical fastening
2. Soldering and brazing
3. Welding
4. Press, shrink, or snap fittings
5. Adhesive bonding
6. Assembly processes

Many of these processes are often found in the assembly area of the plant. Figure 1-13 provides one example where all but welding are used in the sequence of operations to produce a computer.

At the lowest level, microelectronic fabrication methods produce entire *integrated circuits* (ICs) of solid-state (no moving parts) components, with wiring and connections, on a single piece of semiconductor material, usually single-crystalline silicon. Arrays of ICs are produced on thin, round disks of semiconductor material called *wafers*. Once the semiconductor on the wafer has been fabricated, the finished wafer is cut up into individual ICs, or *chips*. Next, at level 2, these chips are individually housed with connectors or leads making up "dies" that are placed into "packages" using adhesives. The packages provide protection from the elements and a connection between the die and another subassembly called the printed circuit board (PCB). At level 3, IC packages, along with other discrete components (e.g., resistors, capacitors, etc.), are soldered onto PCBs and then assembled with even larger circuits on PCBs. This is sometimes referred to as *electronic assembly.* Electronic packages at this level are called *cards* or *printed wiring assemblies* (PWAs). Next, series of cards are combined on a *backpanel* PCB, also known as a *motherboard* or simply a *board*. This level of packaging is sometimes referred to as *card-on-board* packaging. Ultimately, card-on-board assemblies are put into

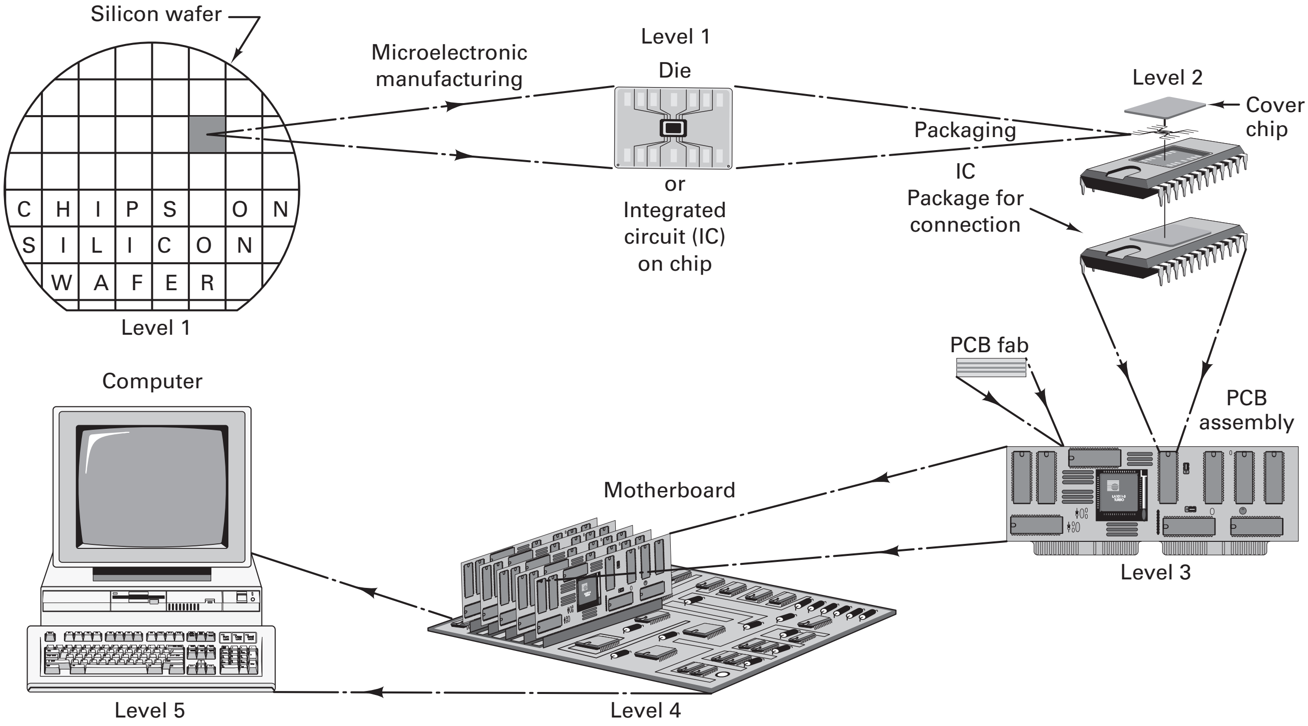

FIGURE 1-13 How an electronic product is made.

housings using mechanical fasteners and snap fitting and finally integrated with power supplies and other electronic peripherals through the use of cables to produce final commercial products.

Finishing processes are yet another class of processes typically employed for cleaning, removing burrs left by machining, or providing protective and/or decorative surfaces on workpieces. Surface treatments include chemical and mechanical cleaning, deburring, painting, plating, buffing, galvanizing, and anodizing.

Heat treatment is the heating and cooling of a metal for the specific purpose of altering its metallurgical and mechanical properties. Because changing and controlling these properties is so important in the processing and performance of metals, heat treatment is a very important manufacturing process. Each type of metal reacts differently to heat treatment. Consequently, a designer should know not only how a selected metal can be altered by heat treatment but, equally important, *how a selected metal will react, favorably or unfavorably, to any heating or cooling that may be incidental to the manufacturing processes*.

OTHER MANUFACTURING OPERATIONS

In addition to the processes already described, there are some other fundamental manufacturing operations that we must consider. *Inspection* determines whether the desired objectives stated by the designer in the specifications have been achieved. This activity provides feedback to design and manufacturing with regard to the process behavior. Essential to this inspection function are measurement activities.

In *testing*, a product is tried by actual function or operation or by subjection to external effects. Although a test is a form of inspection, it is often not viewed that way. In manufacturing, parts and materials are inspected for conformance to the dimensional and physical specifications, while testing may simulate the environmental or usage demands to be made on a product after it is placed in service. Complex processes may require many tests and inspections. Testing includes life-cycle tests, destructive tests, nondestructive testing to check for processing defects, wind-tunnel tests, road tests, and overload tests.

Transportation of goods in the factory is often referred to as *material handling* or *conveyance* of the goods and refers to the transporting of unfinished goods (work-in-process) in the plant and supplies to and from, between, and during manufacturing operations. Loading, positioning, and unloading are also material-handling operations. Transportation, by truck or train, is material handling between factories. Proper manufacturing system design and mechanization can reduce material handling in countless ways.

Automatic material handling is a critical part of continuous automatic manufacturing. The word *automation* is derived from automatic material handling. Material handling, a fundamental operation done by people and by conveyors and loaders, often includes positioning the workpiece within the machine by indexing, shuttle bars, slides, and clamps. In recent years, wire-guided automated guided vehicles (AGVs) and automatic storage and retrieval systems (AS/RSs) have been developed in an attempt to replace forklift trucks on the factory floor. Another form of material handling, the mechanized removal of waste (chips, trimming, and cutoffs), can be more difficult than handling the product. Chip removal must be done before a tangle of scrap chips damages tooling or creates defective workpieces.

Most texts on manufacturing processes do not mention *packaging*, yet the packaging is often the first thing the customer sees. Also, packaging often maintains the product's quality between completion and use. (Packaging is also used in electronics manufacturing to refer to placing microelectronic chips in containers for mounting on circuit boards.) Packaging can also prepare the product for delivery to the user. It varies from filling ampules with antibiotics to steel-strapping aluminum ingots into palletized loads. A product may require several packaging operations. For example, Hershey Kisses are (1) individually wrapped in foil, (2) placed in bags, (3) put into boxes, and (4) placed in shipping cartons.

Weighing, filling, sealing, and labeling are packaging operations that are highly automated in many industries. When possible, the cartons or wrappings are formed from material on rolls in the packaging machine. Packaging is a specialty combining elements of product design (styling), material handling, and quality control. Some packages cost more than their contents, for example, cosmetics and razor blades.

During *storage*, nothing happens intentionally to the product or part except the passage of time. Part or product deterioration on the shelf is called *shelf life*, meaning that items can rust, age, rot, spoil, embrittle, corrode, creep, and otherwise change in state or structure, while supposedly nothing is happening to them. Storage is detrimental, wasting the company's time and money. The best strategy is to keep the product moving with as little storage as possible. Storage during processing must be *eliminated*, not automated or computerized. Companies should avoid investing heavily in large automated systems that do not alter the bottom line. Have the outputs improved with respect to the inputs, or has storage simply increased the costs (indirectly) without improving either the quality or the throughput time?

By not storing a product, the company avoids having to (1) remember where the product is stored, (2) retrieve it, (3) worry about its deteriorating, or (4) pay storage costs. Storage is the biggest waste of all and should be eliminated at every opportunity.

UNDERSTAND YOUR PROCESS TECHNOLOGY

Understanding the process technology of the company is very important for everyone in the company. Manufacturing technology affects the design of the product and the manufacturing system, the way in which the manufacturing system can be controlled, the types of people employed, and the materials that can be processed. Table 1-4 outlines the factors that characterize a process technology. Take a process you are familiar with and think about these factors. One valid criticism of American companies is that their managers seem to have an aversion to understanding their companies' manufacturing technologies. Failure to understand the company business (i.e., its fundamental process technology) can lead to the failure of the company.

TABLE 1-4 Characterizing a Process Technology

- Mechanics (statics and dynamics of the process)
  - How does the process work?
  - What are the process mechanics (statics, dynamics, friction)?
  - What physically happens, and what makes it happen? (Understand the physics.)
- Economics or costs
  - What are the tooling costs, the engineering costs?
  - Which costs are short term, which long term?
  - What are the setup costs?
- Time spans
  - How long does it take to set up the process initially?
  - What is the throughput time?
  - How can these times be shortened?
  - How long does it take to run a part once it is set up (cycle time)?
  - What process parameters affect the cycle time?
- Constraints
  - What are the process limits?
  - What cannot be done?
  - What constrains this process (sizes, speeds, forces, volumes, power, cost)?
  - What is very hard to do within an acceptable time/cost frame?
- Uncertainties and process reliability
  - What can go wrong?
  - How can this machine fail?
  - What do people worry about with this process?
  - Is this a reliable, stable process?
- Skills
  - What operator skills are critical?
  - What is not done automatically?
  - How long does it take to learn to do this process?
- Flexibility
  - Can this process be adapted easily for new parts of a new design or material?
  - How does the process react to changes in part design and demand?
  - What changes are easy to do?
- Process capability
  - What are the accuracy and precision of the process?
  - What tolerances does the process meet? (What is the process capability?)
  - How repeatable are those tolerances?

The way to overcome technological aversion is to run the process and study the technology. Only someone who has run a drill press can understand the sensitive relationship between feed rate and drill torque and thrust. All processes have these "know-how" features. Those who run the processes must be part of the decision making for the factory. The CEO who takes a vacation working on the plant floor and learning the processes will be well on the way to being the head of a successful company.

PRODUCT LIFE CYCLE AND LIFE-CYCLE COST

Manufacturing systems are dynamic and change with time. There is a general, traditional relationship between a *product's life cycle* and the kind of manufacturing system used to make the product. Figure 1-14 simplifies the life cycle into these steps:

1. *Startup*. New product or new company, low volume, small company.
2. *Rapid growth*. Products become standardized and volume increases rapidly. Company's ability to meet demand stresses its capacity.
3. *Maturation*. Standard designs emerge. Process development is very important.

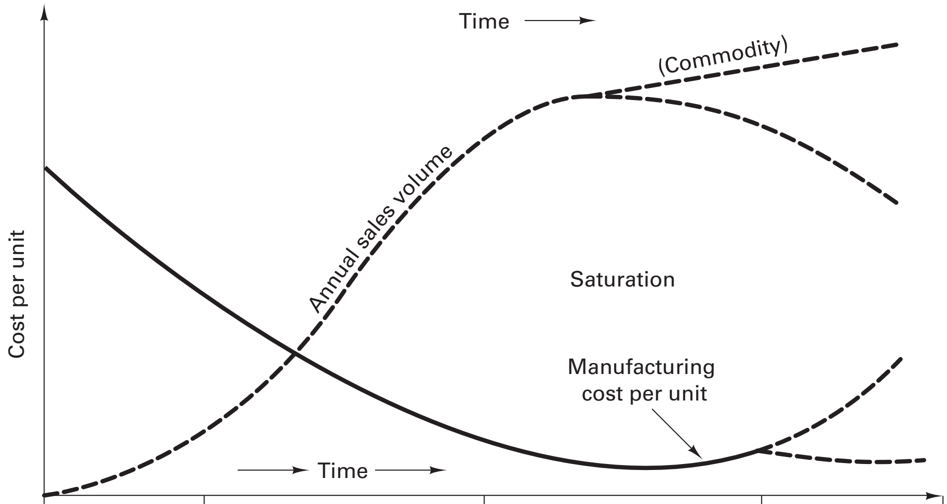

	Startup	Rapid growth	Maturation	Commodity or decline
Manufacturing system design	Job shop	Production job shop with some flow	Production job shop with some flow lines and assembly lines	More flow mass-produce
Product variety:	Great variety; product innovation great	Increasing standardization; less variety	Emergence of a dominant standard design	High standardization "Commodity" characteristics
Industry structure:	Many small competitors	Fallout and consolidation	Few large companies	"Survivors" become commodities
Form of competition:	Product characteristics	Product quality, cost, and availability	Price and quality with reliability	Price with consistent quality
Process innovation:	Low	Medium to high	High	Medium
Automation:	Low	Medium	Medium to high	High

FIGURE 1-14 Product life-cycle costs change with the classic manufacturing system designs.

4. *Commodity*. Long-life, standard-of-the-industry type of product or
5. *Decline*. Product is slowly replaced by improved products.

The maturation of a product in the marketplace generally leads to fewer competitors, with competition based more on price and on-time delivery than on unique product features. As the competitive focus shifts during the different stages of the product life cycle, the requirements placed on manufacturing—cost, quality, flexibility, and delivery dependability—also change. The stage of the product life cycle affects the product design stability, the length of the product development cycle, the frequency of engineering change orders, and the commonality of components, all of which have implications for manufacturing process technology.

During the design phase of the product, much of the cost of manufacturing and assembly is determined. Assembly of the product is inherently integrative as it focuses on pairs and groups of parts.

It is crucial to achieve this integration during the design phase because about 70% of the life-cycle cost of a product is determined when it is designed. Design choices determine materials, fabrication methods, assembly methods, and, to a lesser degree, material-handling options, inspection techniques, and other aspects of the production system. Manufacturing engineers and internal customers can influence only a small part of the overall cost if they are presented with a finished design that does not reflect their concerns. Therefore all aspects of production should be included if product designs are to result in real functional integration.

Life-cycle costs include the costs of all the materials, manufacture, use, repair, and disposal of a product. Early design decisions determine about 60% of the cost, and all activities up to the start of full-scale development determine about 75%. Later decisions can make only minor changes to the ultimate total unless the design of the manufacturing system is changed.

In short, the concept of product life-cycle provides a framework for thinking about the product's evolution through time and the kind of market segments that are likely to develop at various times. Analysis of life-cycle costs shows that the design of the manufacturing system determines the cost per unit, which generally decreases over time with process improvements and increased volumes. For additional discussion on reliability and maintainability of manufacturing equipment, see SAE publication M-110.2.

The linked-cell manufacturing system design discussed in Chapter 39 enables companies to decrease cost per unit significantly while maintaining flexibility and making smooth transitions from low-volume to high-volume manufacturing.

Low-cost manufacturing does not just happen. There is a close, interdependent relationship among the design of a product, the selection of materials, the selection of processes and equipment, the design of the processes, and tooling selection and design. Each of these steps must be carefully considered, planned, and coordinated before manufacturing starts. This lead time, particularly for complicated products, may take months, or even years, and the expenditure of large amounts of money may be involved. Typically, the lead time for a completely new model of an automobile or a modern aircraft may be two to five years.

Some of the steps involved in getting the product from the original idea stage to daily manufacturing are discussed in Chapter 9 in more detail. The steps are closely related to each other. For example, the design of the tooling is dependent on the design of the parts to be produced. It is often possible to simplify the tooling if certain changes are made in the design of the parts or the design of the manufacturing systems. Similarly, the material selection will affect the design of the tooling or the processes selected. Can the design be altered so that it can be produced with tooling already on hand and thus avoid the purchase of new equipment? Close coordination of all the various phases of design and manufacture is essential if economy is to result.

With the advent of computers and computer-controlled machines, the integration of the design function and the manufacturing function through the computer is a reality. This is usually called CAD/CAM (computed-aided design/computer-aided manufacturing). The key is a common database from which detailed drawings can be made for the designer and the manufacturer and from which programs can be generated to make all the tooling. In addition, extensive computer-aided testing and inspection (CATI) of the manufactured parts is taking place. There is no doubt that this trend will continue at ever-accelerating rates as computers become cheaper and smarter, but at this time, the computers necessary to accomplish complete computer-integrated manufacturing (CIM) are expensive and the software very complex. Implementing CIM requires a lot of manpower as well.

MANUFACTURING SYSTEM DESIGN

When designing a manufacturing system, two customers must be taken into consideration: the external customer who buys the product and the internal customer who makes the product. The external customer is likely to be global and demand greater variety with superior quality and reliability. The internal customer is often empowered to make critical decisions about how to make the products. The Toyota Motor Company is making vehicles in 25 countries. Their truck plant in Indiana has the capacity to make 150,000 vehicles per year (creating 2300 new jobs), using the Toyota Production System (TPS). An appreciation of the complexity of the manufacturing system design problem is shown in Figure 1-15, where the choices in system design are reflected against the number of different products, or parts being made in the system, often called variety. Clearly, there are many choices regarding which method (or system) to use to make the goods.

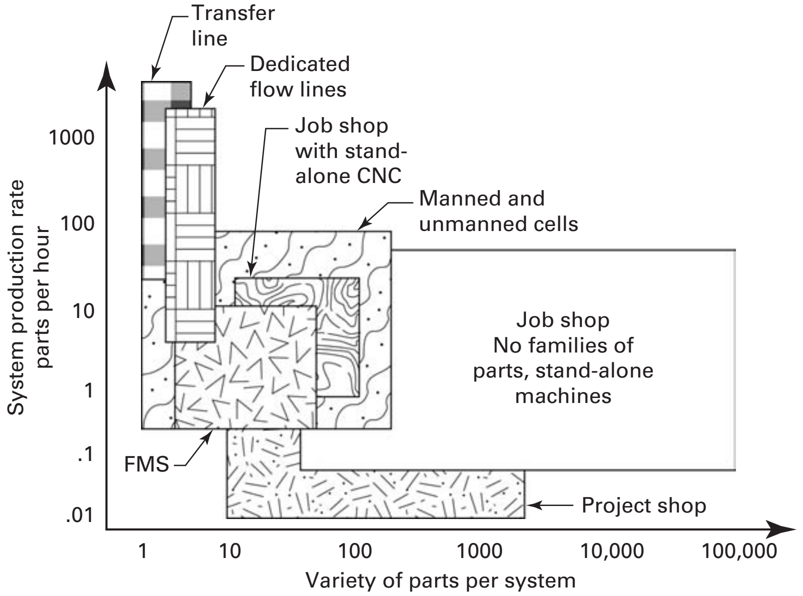

This part variety-production rate matrix shows examples of particular manufacturing system designs. This matrix was developed by Black based on real factory data. Notice there is a large amount of overlap in the middle of the matrix, so the manufacturing engineer has many choices regarding which method or system to use to make the goods. This book will show the connection between the process and the manufacturing system used to produce the products, turning raw materials into finished goods.

FIGURE 1-15 Different manufacturing system designs produce goods at different production rates.

A manufacturer never really knows how large or diverse a market will be. If a diverse and specialized market emerges, a company with a focused flow-line system may be too inflexible to meet the varying demand. If a large but homogeneous market develops, a manufacturer with a flexible system may find production costs too high and the flexibility unexploitable. Another general relationship between manufacturing system designs and production volumes is shown in Figure 1-16.

NEW MANUFACTURING SYSTEMS

The manufacturing process technology described herein is available worldwide. Many countries have about the same level of process development when it comes to manufacturing technology. Much of the technology existing in the world today was developed in the United States, Germany, France, and Japan. More recently Taiwan, Korea, and China have been making great inroads into American markets, particularly in the automotive and electronics industries. What many people have failed to recognize is that many companies have developed and promoted a totally different kind of manufacturing production system. This new system, called the Toyota Production System, will take its place with the American Armory System and the Ford System for mass production. This new system, developed by the Toyota Motor Company, is known worldwide as the lean manufacturing system.

Many American companies have successfully adopted some version of the Toyota system. The experience of dozens of these companies is amalgamated into 10 steps, which, if followed, can make any company a factory with a future.

For the lean production to work, 100%-good units flow rhythmically to subsequent processes without interruption. In order to accomplish this, an integrated quality control (IQC) program has to be developed. The responsibility for quality has been given to manufacturing. All the employees are inspectors and are empowered to make it right the first time. There is a companywide attitude toward constant quality improvement. Make quality easy to see, stop the line when something goes wrong, and inspect things 100% if necessary to prevent defects from occurring. The results of this system are astonishing in terms of quality, low cost, and on-time delivery of goods to the customer.

The most important factor in economical and successful manufacturing is the manner in which the resources—labor, materials, and capital—are organized and managed so as to provide effective coordination, responsibility, and control. Part of the success of

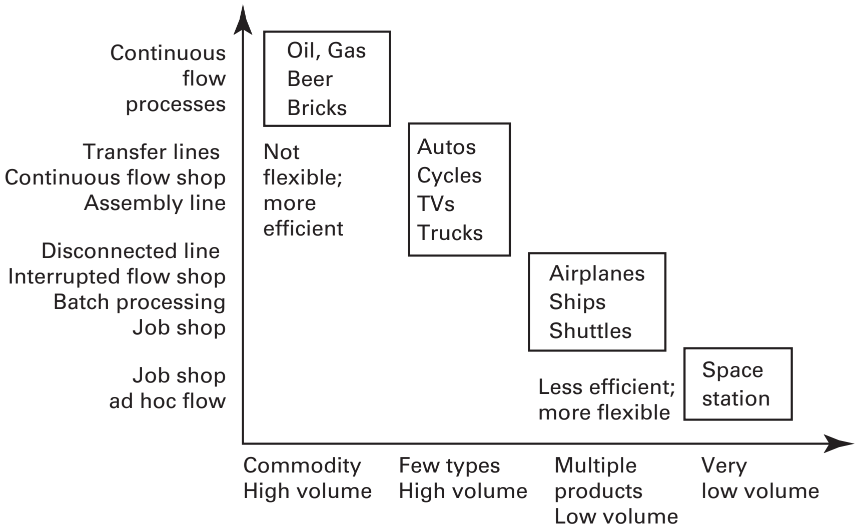

The figure shows in a general way the relationship between manufacturing systems and production volumes. The upper left represents systems with low flexibility but high efficiency compared to the lower right, where volumes are low and so is efficiency. Where a particular company lies in this matrix is determined by many forces, not all of which are controllable. The job of manufacturing and industrial engineers is to design and implement a system which can achieve low unit cost, superior quality, with on-time delivery in a flexible way.

FIGURE 1-16 This figure shows in a general way the relationship between manufacturing systems and production volumes.

lean production can be attributed to a different management approach. This approach is characterized by a holistic attitude toward people.

The real secret of successful manufacturing lies in designing a manufacturing system in which everyone who works in the system understands how the system works, how goods are controlled, with the decision making placed at the correct level. The engineers also must possess a broad fundamental knowledge of design, metallurgy, processing, economics, accounting, and human relations. In the manufacturing game, low-cost mass production is the result of teamwork within an integrated manufacturing/production system. This is the key to producing superior quality at less cost with on-time delivery.

Key Words

assembling
casting
consumer goods
continuous process
design engineer
fabricating
filing jig
flow shop
forming
group technology
heat treatment
inspection
job
job shop
joining
lean production
lean shop
lost-wax casting
linked-cell manufacturing system
machine tool
machining
manufacturing cost
manufacturing engineer
manufacturing process
manufacturing system
molding
numerical control
operation
producer goods
product life cycle
production system
project shop
shearing
station
tooling
tools
treatments
welding

Review Questions

1. What role does manufacturing play relative to the standard of living of a country?
2. Aren't all goods really consumer goods, depending on how you define the customer? Discuss.
3. Give examples of a job shop, flow shop, and project shop.
4. How does a system differ from a process? From a machine tool? From a job? From an operation?
5. Is a cutting tool the same thing as a machine tool?
6. What are the major classifications of basic manufacturing processes?
7. Could casting be used to produce a complex-shaped part to be made from a hard-to-machine metal? How else could the part be made?
8. In the lost-wax casting process, what happens to the foam?
9. In making a gold medal, what do we mean by a "relief image" cut into the die?
10. How is a railroad station like a station on an assembly line?
11. Since no work is being done on a part when it is in storage, it does not cost you anything. True or false? Explain.
12. What forming processes are used to make a paper clip?

13. We can analogize your university to a manufacturing system that produces graduates. Assuming that it takes four years to get a college degree and that each course really adds value to the student's knowledge base, what percentage of the four years is "value adding" (percentage of time in class plus two hours of preparation for each hour in class)?
14. It is acknowledged that chip-type machining is basically an inefficient process. Yet it is probably used more than any other to produce desired shapes. Why?
15. Compare Figure 1-1 and Figure 1-14. What are the stages of the product life cycle for an audiocassette tape?
16. In a modern safety razor with three or four blades that sells for $1, what do you think the cost of the blades might be?
17. List three purposes of packaging operations.
18. Assembly is defined as "the putting together of all the different parts to make a complete machine." Think of (and describe) an assembly process. Is making a club sandwich an assembly process? What about carving a turkey? Is this an assembly process?
19. What are the physical elements in a manufacturing system?
20. In the production system, who usually figures out how to make the product?
21. In Figure 1-7, what do the lines connecting the processes represent?
22. Characterize the process of squeezing toothpaste from a tube (extrusion of toothpaste) using Table 1-4 as a guideline. See the index for help on extrusion.
23. What are the major process steps in the assembly of an automobile?
24. What difficulties would result if production planning and scheduling were omitted from the procedure outlined in Chapter 9 for making a product in a job shop?
25. It has been said that low-cost products are more likely to be more carefully designed than high-priced items. Do you think this is true? Why or why not?
26. Proprietary processes are closely held or guarded company secrets. The chemical makeup of a lubricant for an extrusion process is a good example. Give another example of a proprietary process.
27. If the rolls for the cold-rolling mill that produces the sheet metal used in your car cost $300,000 to $400,000, how is it that your car can still cost less than $20,000?
28. Make a list of service production systems, giving an example of each.
29. What is the fundamental difference between an SPS and an MPS?
30. In the process of buying a calf, raising it to a cow, and disassembling it into "cuts" of meat for sale, where is the "value added"?
31. What kind of process is powder metallurgy: casting or forming?
32. In view of Figure 1-2, who really determines the selling price per unit?
33. What costs make up manufacturing cost (sometimes called factory cost)?
34. What are major phases of a product life cycle?
35. How many different manufacturing systems might be used to make a component with annual projected sales of 16,000 parts per year with 10 to 12 different models (varieties)?
36. In general, as the annual volume for a product increases, the unit cost decreases. Explain.

■ Problems

1. The Toyota truck plant in Indiana produces 150,000 trucks per year. The plant runs one eight-hour shift, 300 days per year, and makes 500 trucks per day. About 1300 people work on the final assembly line. Each car has about 20 labor hours per car in it.
   a. Assuming the truck sells for $16,000 and workers earn $30 per hour in wages and benefits, what percentage of the cost of the truck is in direct labor?
   b. What is the production rate of the final assembly line?
2. Suppose you wanted to redesign a stapler to have fewer components. (You should be able to find a stapler at a local discount store.) How much did it cost? How many parts does it have? Make up a "new parts" list and indicate which parts would have to be redesigned and which parts would be eliminated. Estimate the manufacturing cost of the stapler assuming that manufacturing costs are 40% of the selling price. What are the disadvantages of your new stapler design versus the old stapler?
3. A company is considering making automobile bumpers from aluminum instead of from steel. List some of the factors it would have to consider in arriving at its decision.
4. Many companies are critically examining the relationship of product design to manufacturing and assembly. Why do they call this concurrent engineering?

www.wiley.com/college/degarmo

Chapter 1 CASE STUDY

Famous Manufacturing Engineers

Manufacturing engineering is that engineering function charged with the responsibility of interpreting product design in terms of manufacturing requirements and process capability. Specifically: the manufacturing engineer may:

- Determine how the product is to be made in terms of specific manufacturing processes.
- Design workholding and work transporting tooling or containers.
- Select the tools (including the tool materials) that will machine or form the work materials.
- Select, design, and specify devices and instruments which inspect that which has been manufactured to determine its quality.
- Design and evaluate the performance of the manufacturing system.
- Perform all these functions (and many more) related to the actual making of the product at the most reasonable cost per unit without sacrifice of the functional requirements or the users' service life.

There's no great glory in being a great manufacturing engineer (MfE). If you want to be a manufacturing engineer, you had better be ready to got your hands dirty.

Of course, there are exceptions. There have been some very famous manufacturing engineers.

For example:

- John Wilkinson of Bersham England built a boring mill in 1775 to bore the cast iron cylinders for James Watt's steam engine. How good was this machine?
- Eli Whitney was said to have invented the cotton gin, a machine to separate seeds from cotton. His machine was patented but was so simple, anyone could make one. He was credited with "interchangeability" – but we know Thomas Jefferson observed interchangeability in France in 1785 and probably the French gunsmith LeBlanc is the real inventor here. Jefferson tried to bring the idea to America and Whitney certainly did. He took 10 muskets to congress, disassembled them, and scattered the pieces. Interchangeable parts permitted them to be reassembled. He was given a contract for 2,000 guns to be made in 2 years. But what is the rest of his story?
- Joe Brown started a business in Rhode Island in 1833 making lathes and small tools as well as timepieces (watchmaker). Lucian Sharp joined the company in 1848 and developed a pocket sheet metal gage in 1877 a 1 inch micrometer and in 1862 the universal milling machine.
- Sam Colt at age 16 he salled to Calcutta on the Brig "Curve". He whittled a wood model of a revolver on this voyage. He saved his money and had models of a gun built in Hartford by Anson Chase for which he got a patent. He set up a factory in New Jersey – but he could not sell his guns to the army – too complicated. He sold to the Texas Rangers and the Florida Frontiersmen but he had to close the plant. In 1846 the Mexican war broke out. General Zachary Taylor and Captain Sam Walters wanted to buy guns. Colt had none but accepted orders for 1000 guns and constructed a model (Walker Colt) and arranged to have them made at Whitney's (now 40 years old) plant in Whitneyville. Here he learned about mass production methods. In 1848 he rented a plant in Hartford and the Colt legend spread. In 1853 he had built one of the worlds largest arms plant in Connecticut which had 1400 machine tools. Colt helped start the careers of
  - ○ E K Root – mechanic and superintendent – paying him a salary of $25,000 in the 1800's. Abolished hand work – jigs and fixtures.
  - ○ Francis Pratt and Amos Whitney – famous machine tool builders.
  - ○ William Gleason – gear manufacturer
  - ○ E. P. Bullard – invented the Mult–An–Matic Multiple spindle machine which cut the time to make a flywheel from 18 minutes to slightly over 1 minute. Sold this to Ford.
  - ○ Christopher Sponer.
  - ○ E. J. Kingsbury invented a drilling machine to drill holes through toy wheel hubs that had a spring loaded cam which enables the head to sense the condition of the casting and modify feed rate automatically.

Now here are some more names from the past of famous and not so famous manufacturing, mechanical, and industrial engineers. Relate them to the development of manufacturing processes or manufacturing system designs.

- Eli Whitney
- Henry Ford
- Charles Sorenson
- Sam Colt
- John Parsons
- Eiji Toyoda
- Elisha Root
- John Hall
- Thomas Blanchard
- Fred Taylor
- Talichi Ohno
- Ambrose Swasey

CHAPTER 2

PROPERTIES OF MATERIALS

2.1 INTRODUCTION

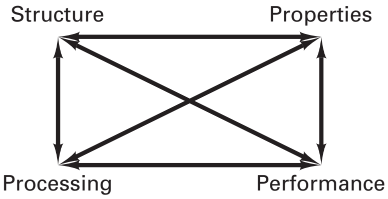

FIGURE 2-1
The manufacturing relationships among structure, properties, processing, and performance.

Manufacturing has been accurately defined as the activities that are performed in the conversion of “stuff” into “things.” Successful products begin with appropriate materials. You wouldn’t build an airplane out of lead or an automobile out of concrete—you need to start with the right stuff. But “stuff” rarely comes in the right shape, size, and quantity for the desired use. Parts and components must be produced by subjecting engineering materials to one or more processes (often a series of operations) that alter their shape, their properties, or both. Much of a manufacturing education relates to an understanding of (1) the *structure* of materials, (2) the *properties* of materials, (3) the *processing* of materials, and (4) the *performance* of materials, and the interrelations between these four factors, as illustrated in Figure 2-1.

This chapter will begin to address the properties of engineering materials. Chapters 3 and 4 will discuss the subject of “structure” and begin to provide the whys behind various properties. Chapter 5 introduces the possibility of modifying structure to produce desired properties. Most engineering materials do not have a single set of properties but rather offer a range or spectrum of possibilities. Taking advantage of this range, we might want to intentionally make a material weak and ductile for easy shaping (forming loads are low and tool life is extended) and then, once the shape has been produced, make the material strong for enhanced performance in use.

When selecting a material for a product or application, it is important to ensure that its properties will be adequate for the anticipated operating conditions. The various requirements of each part or component must first be estimated or determined. These requirements typically include mechanical characteristics (strength, rigidity, resistance to fracture, the ability to withstand vibrations or impacts) and physical characteristics (weight, electrical properties, appearance) as well as features relating to the service environment (ability to operate under extremes of temperature or to resist corrosion). Candidate materials must possess the desired properties within their range of possibilities.

To help evaluate the properties of engineering materials, a variety of standard tests have been developed, and data from these tests have been tabulated and made readily available. Proper use of this data often requires sound engineering judgment. It is important to consider which of the evaluated properties are significant, under what conditions the test values were determined, and what restrictions or limitations should be placed on their use. Only by being familiar with the various test procedures, their capabilities, and their limitations can one determine if the resulting data are applicable to a particular problem.

METALLIC AND NONMETALLIC MATERIALS

While engineering materials are often grouped as metals, ceramics, polymers, and composites, a simpler distinction might be to separate them into metallic and nonmetallic. The common *metallic* materials include iron, copper, aluminum, magnesium, nickel, titanium, lead, tin, and zinc as well as the alloys of these metals, such as steel, brass, and bronze. They possess the metallic properties of luster, high thermal conductivity, and high electrical conductivity; they are relatively ductile; and some have good magnetic properties. Some common *nonmetals* are wood, brick, concrete, glass, rubber, and plastics. Their properties vary widely, but they generally tend to be weaker, less ductile, and less dense than the metals, and to have poor electrical and thermal conductivities.

Although metals have traditionally been the more important of the two groups, the nonmetallic materials have become increasingly important in modern manufacturing. Advanced ceramics, composite materials, and engineered plastics have emerged in a number of applications. In many cases, metals and nonmetals are viewed as competing materials, with selection being based on how well each is capable of providing the required properties. Where both perform adequately, total cost often becomes the deciding factor, where total cost includes both the cost of the material and the cost of fabricating the desired component. Factors such as product lifetime, environmental impact, energy requirements, and recyclability are also considered.

PHYSICAL AND MECHANICAL PROPERTIES

A common means of distinguishing one material from another is through their *physical properties.* These include such features as density (weight); melting point; optical properties (transparency, opaqueness, or color); the thermal properties of specific heat, coefficient of thermal expansion, and thermal conductivity; electrical conductivity; and magnetic properties. In some cases, physical properties are of prime importance when selecting a material, and several will be discussed in more detail near the end of this chapter.

More often, however, material selection is dominated by the properties that describe how a material responds to applied loads or forces. These *mechanical properties* are usually determined by subjecting prepared specimens to standard test conditions. When using test results, however, it is important to remember that they apply only to the specific conditions that were employed. The actual service conditions of engineered products rarely duplicate the conditions of laboratory testing, so considerable caution should be exercised when applying test results.

STRESS AND STRAIN

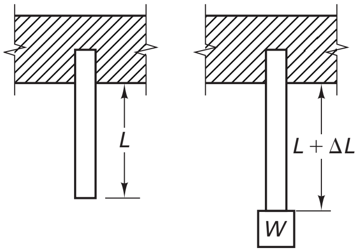

FIGURE 2-2 Tension loading and the resultant elongation.

When a force or load is applied to a material, it deforms or distorts (becomes *strained*), and internal reactive forces (*stresses*) are transmitted through the solid. For example, if a weight, W, is suspended from a bar of uniform cross section and length L, as in Figure 2-2, the bar will elongate by an amount ΔL. For a given weight, the magnitude of the *elongation*, ΔL, depends on the original length of the bar. The amount of elongation per unit length, expressed as $e = \Delta L/L$, is called the *unit strain*. Although the ratio is that of a length to another length and is therefore dimensionless, strain is usually expressed in terms of millimeters per meter, inches per inch, or simply as a percentage.

Application of the force also produces reactive stresses, which serve to transmit the load through the bar and on to its supports. *Stress* is defined as the force or load being transmitted divided by the cross-sectional area transmitting the load. Thus, in Figure 2-2, the stress is $S = W/A$, where A is the cross-sectional area of the supporting bar. Stress is normally expressed in megapascals (in SI units, where a pascal is 1 newton per square meter) or pounds per square inch (in the English system).

In Figure 2-2, the weight tends to stretch or lengthen the bar, so the strain is known as a *tensile strain* and the stress as a *tensile stress*. Other types of loadings produce other types of stresses and strains (Figure 2-3). Compressive forces tend to shorten the material and produce *compressive stresses and strains. Shear stresses and strains* result when two forces acting on a body are offset with respect to one another.

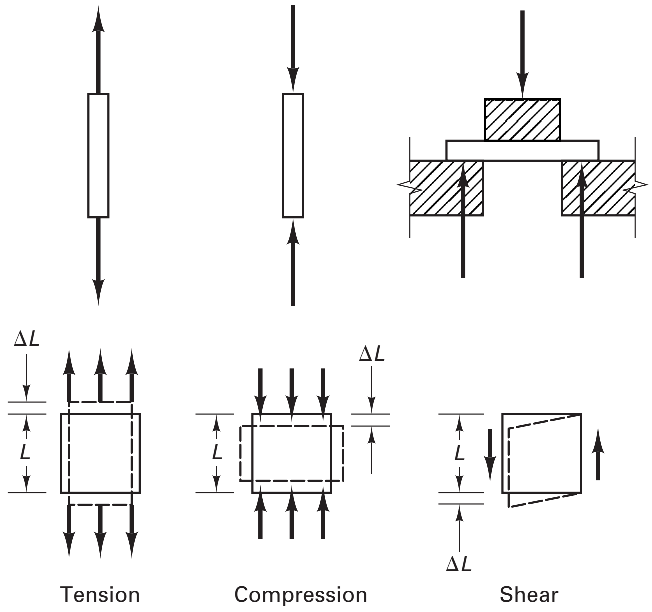

FIGURE 2-3 Examples of tension, compression, and shear loading, and their response.

2.2 STATIC PROPERTIES

When the forces that are applied to a material are constant, or nearly so, they are said to be *static*. Since static loadings are observed in many applications, it is important to characterize the behavior of materials under these conditions. For design engineers, the strength of a material may be of primary concern, along with the amount of elastic stretching or deflection that may be experienced while under load. Manufacturing engineers, looking to shape products, may be more concerned with the ability to mechanically deform the material without fracture.

As a result, a number of standardized tests have been developed to evaluate the *static properties* of engineering materials. Test results can be used to determine if a given material or batch of material has the necessary properties to meet specified requirements. Other tests provide the materials characterization base used for material selection. In all cases, it is important to determine that the service conditions are indeed similar to those of testing. Even when the service conditions differ, the results of standard tests may be helpful in qualitatively rating and comparing various materials.

TENSILE TEST

The most common of the static tests is the *uniaxial tensile test*. The test begins with the preparation of a standard specimen with prescribed geometry, like the round and flat specimens described in Figure 2-4. The standard specimens ensure meaningful and re-

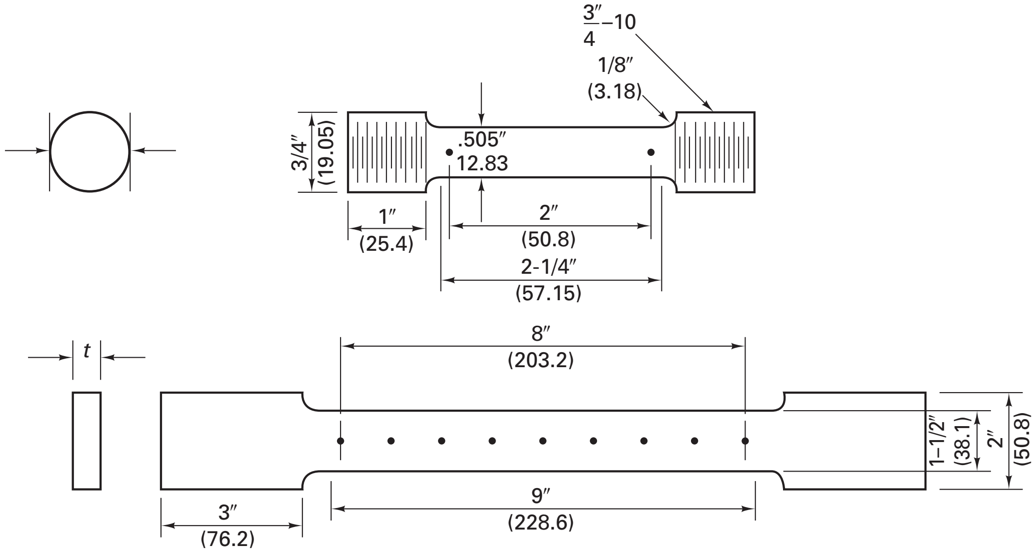

FIGURE 2-4 Two common types of standard tensile test specimens: (a) round; (b) flat. Dimensions are in inches, with millimeters in parentheses.

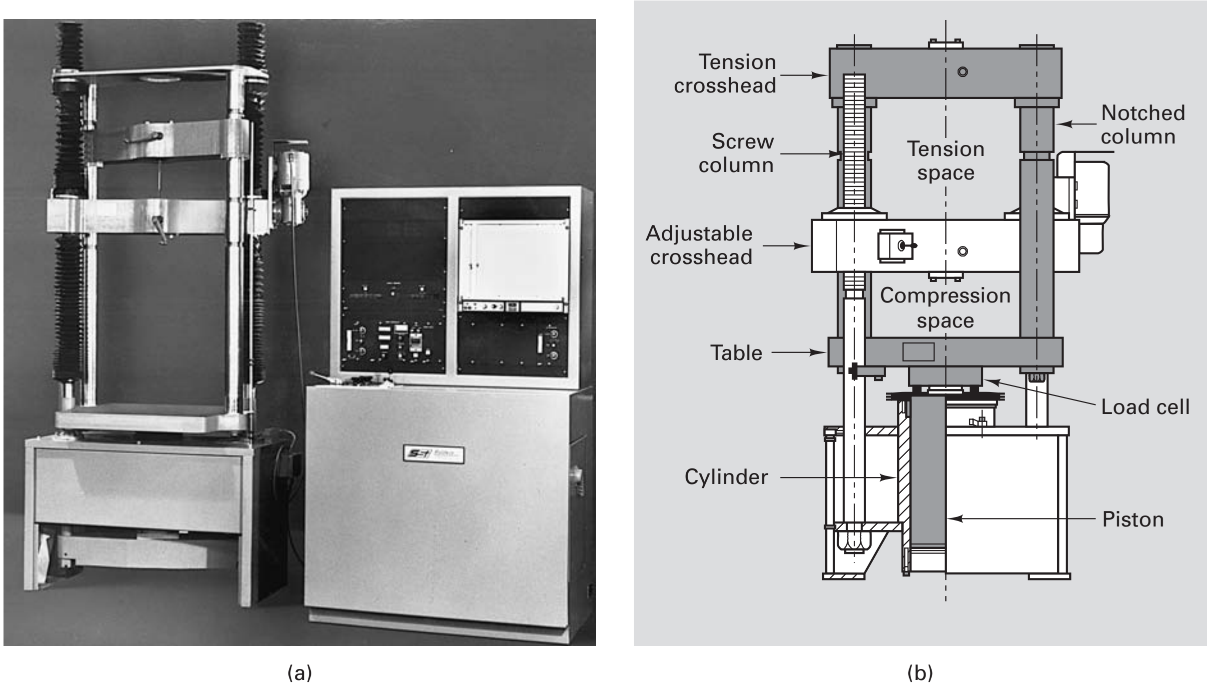

FIGURE 2-5 (a) Hydraulic universal (tension and compression) testing machine; (b) schematic of the load frame showing how upward motion of the darkened yoke can produce tension or compression with respect to the stationary (white) crosspiece. *(Courtesy of Satec Systems, Inc., Grove City, PA.)*

producible results, and are designed to produce uniform uniaxial tension in the central portion of the specimen while ensuring reduced stresses in the enlarged ends or shoulders that are gripped.

Strength Properties. The standard specimen is then loaded in tension in a testing machine like the one shown in Figure 2-5. A force or load, W, is applied and measured by the testing machine, while the elongation or stretch (ΔL) of a specified length (*gage length*) is simultaneously monitored. A plot of the coordinated load–elongation data produces a curve similar to that of Figure 2-6. Since the loads will differ for different-sized specimens and the amount of elongation will vary with different gage lengths, it is important to remove these geometric or size effects if we are to produce data that are characteristic of a given material, not a particular specimen. If the load is divided by the

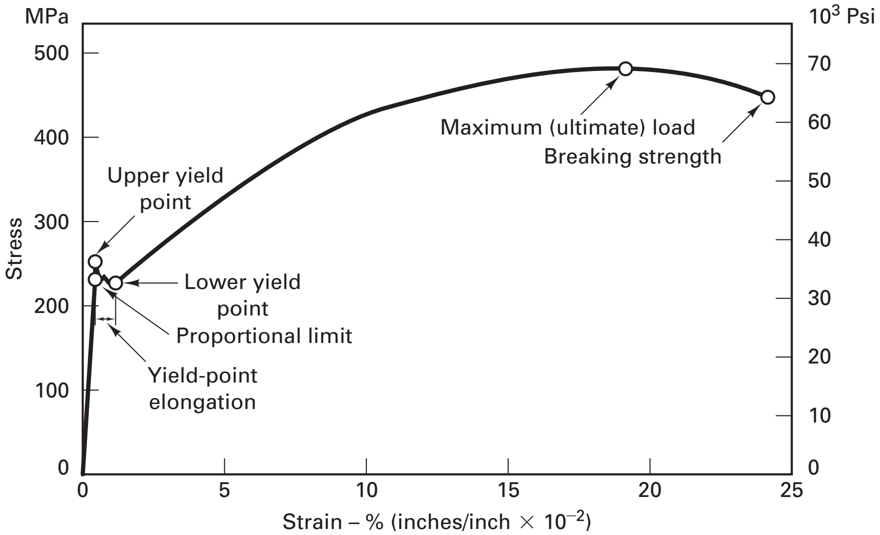

FIGURE 2-6 Engineering stress–strain diagram for a low-carbon steel.

original cross-sectional area, A_o, and the elongation is divided by the *original* gage length, L_o, the size effects are eliminated and the resulting plot becomes known as an *engineering stress–engineering strain curve* (see Figure 2-6). This is simply a load–elongation plot with the scales of both axes modified to remove the effects of specimen size.

In Figure 2-6 it can be noted that the initial response is linear. Up to a certain point, the stress and strain are directly proportional to one another. The stress at which this proportionality ceases is known as the *proportional limit*. Below this value, the material obeys *Hooke's law*, which states that the strain is directly proportional to the stress. The proportionality constant, or ratio of stress to strain, is known as *Young's modulus* or the *modulus of elasticity*. This is an inherent property of a given material[1] and is of considerable engineering importance. As a measure of *stiffness*, it indicates the ability of a material to resist deflection or stretching when loaded and is commonly designated by the symbol E.

Up to a certain stress, if the load is removed, the specimen will return to its original length. The response is elastic or recoverable, like the stretching and relaxation of a rubber band. The uppermost stress for which this behavior is observed is known as the *elastic limit*. For most materials the elastic limit and proportional limit are almost identical, with the elastic limit being slightly higher. Neither quantity should be assigned great engineering significance, however, because the determined values are often dependent on the sensitivity and precision of the test equipment.

The amount of energy that a material can absorb while in the elastic range is called the *resilience*. The area under a load–elongation curve is the product of a force and a distance, and is therefore a measure of the energy absorbed by the specimen. If the area is determined up to the elastic limit, the absorbed energy will be elastic (or potential) energy and is regained when the specimen is unloaded. If we perform the same calculation on an engineering stress–engineering strain diagram, the area beneath the elastic region corresponds to an energy per unit volume and is known as the *modulus of resilience*.

Elongation beyond the elastic limit becomes unrecoverable and is known as *plastic deformation*. When the load is removed, only the elastic stretching will be recovered, and the specimen will retain a permanent change in shape. For most components, the onset of plastic flow represents failure, since the part dimensions will now be outside of allowable tolerances. In manufacturing processes where plastic deformation is used to produce a desired shape, the applied stresses must be sufficiently above the elastic limit to induce the required amount of plastic flow. Permanent deformation, therefore, may be either desirable or undesirable, and it is important to determine the conditions where elastic behavior transitions to plastic flow.

Whenever the elastic limit is exceeded, increases in strain no longer require proportionate increases in stress. For some materials, a stress value may be reached where additional strain occurs without any further increase in stress. This stress is known as the *yield point*, or *yield-point stress*. For low-carbon steels, with curves like that in Figure 2-6, two distinct points are significant. The highest stress preceding extensive strain is known as the *upper yield point*, and the lower, relatively constant, "run-out" value is known as the *lower yield point*. The lower value is the one that usually appears in tabulated data.

Most materials, however, do not have a well-defined yield point and exhibit stress–strain curves more like that shown in Figure 2-7. For these materials, the elastic-to-plastic transition is not distinct, and detection of plastic deformation would be dependent upon machine sensitivity. To solve this dilemma, we elect to define a useful and easily determined property known as the *offset yield strength.* Offset yield strength does *not* describe the onset of plastic deformation but instead defines the stress required to produce a given, but tolerable, amount of permanent strain. By setting this strain, or "offset," to 0.2% (a common value), we can determine the stress required to plastically

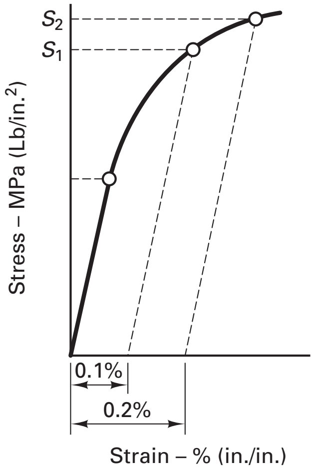

FIGURE 2-7 Stress–strain diagram for a material not having a well-defined yield point, showing the offset method for determining yield strength. S_1 is the 0.1% offset yield strength; S_2 is the 0.2% offset yield strength.

---

[1] The modulus of elasticity is determined by the binding forces between the atoms. Since these forces cannot be changed, the elastic modulus is characteristic of a specific material and is not alterable by the structure modifications that can be induced by processing.

deform a 1-inch length to a final length of 1.002 inches (a 0.2% strain). If the applied stresses are then kept below the 0.2% offset yield strength of the material, the user can be guaranteed that any resulting plastic deformation will be less than 0.2% of the original dimension. While 0.2% is a common offset for many mechanical products, applications that cannot tolerate that amount of deformation may specify offset values of 0.1% or even 0.02%.

Offset yield strength is determined by drawing a line parallel to the elastic line, but displaced by the offset strain, and reporting the stress where the constructed line intersects the actual stress–strain curve. Figure 2-7 shows the determination of both 0.1% offset and 0.2% offset values, S_1 and S_2, respectively. The intersection values are reproducible and independent of equipment sensitivity. Offset yield values are meaningless unless they are reported in conjunction with the amount of offset strain used in their determination. The 0.2% value is most common and is generally assumed unless another number is specified.

As shown in Figure 2-6, the load (or engineering stress) required to produce additional plastic deformation continues to increase. The load that a material or specimen can bear (load-bearing ability) can be computed by multiplying the material strength times its cross-sectional area. During tensile deformation, the specimen is getting longer. The cross-sectional area is decreasing, but the load-bearing ability of the specimen continues to increase! For this to occur, the material must be getting stronger. The mechanism for this phenomenon will be discussed in Chapter 3, where we will learn that the strength of a metal continues to increase with increased deformation.

During the plastic deformation portion of a tensile test, the weakest location of the specimen undergoes deformation and becomes stronger. Since it is no longer the weakest location, another location assumes that status and deforms. As a consequence, the specimen strengthens uniformly and maintains its original cylindrical or rectangular geometry. As plastic deformation progresses, however, the additional increments of strength decrease in magnitude, and a point is reached where the decrease in area cancels or dominates the increase in strength. When this occurs, the load-bearing ability peaks, and the force required to continue straining the specimen begins to decrease, as seen in Figure 2-6. The stress at which the load-bearing ability peaks is known as the *ultimate strength*, *tensile strength*, or *ultimate tensile strength* of the material. The weakest location in the test specimen at that time continues to be the weakest location by virtue of the decrease in area, and further deformation becomes localized. This localized reduction in cross-sectional area, known as *necking*, is shown in Figure 2-8.

If the straining is continued, necking becomes intensified and the tensile specimen will ultimately fracture. The stress at which fracture occurs is known as the *breaking strength* or *fracture strength*. For ductile materials, necking precedes fracture, and the breaking strength is less than the ultimate tensile strength. For a brittle material, fracture usually terminates the stress–strain curve before necking, and possibly before the onset of plastic flow.

Ductility and Brittleness. When evaluating the suitability of a material for certain manufacturing processes or its appropriateness for a given application, the amount of plasticity that precedes fracture, or the *ductility*, can often be a significant property. For metal deformation processes, the greater the ductility, the more a material can be deformed without fracture. Ductility also plays a key role in toughness, a property that will be described shortly.

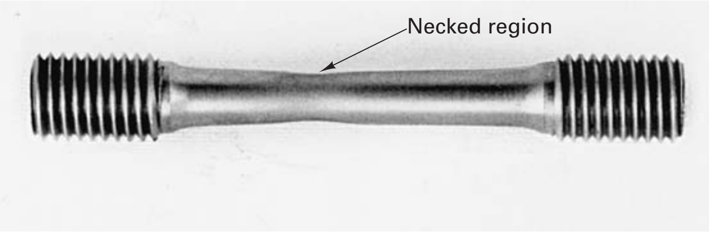

FIGURE 2-8 A standard 0.505-in.-diameter tensile specimen showing a necked region developed prior to failure.

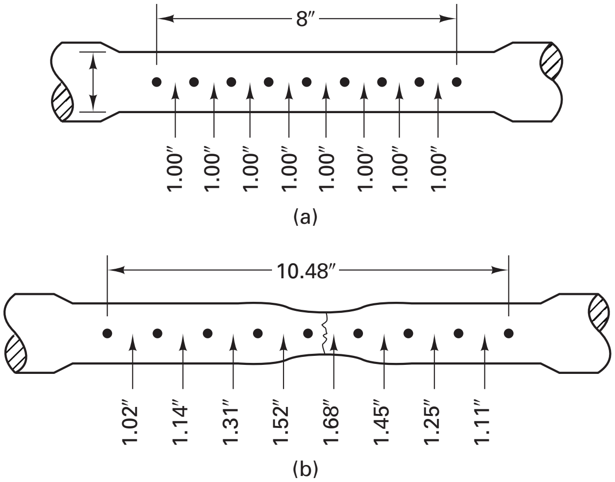

FIGURE 2-9 Final elongation in various segments of a tensile test specimen: (a) original geometry; (b) shape after fracture.

One of the simplest ways to evaluate ductility is to determine the *percent elongation* of a tensile test specimen at the time of fracture. As shown in Figure 2-9, ductile materials do not elongate uniformly when loaded beyond necking. If the percent change of the entire 8-in. gage length is computed, the elongation is 31%. However, if only the center 2-in. segment is considered, the elongation of that portion is 60%. A valid comparison of material behavior, therefore, requires similar specimens with the same standard gage length.

In many cases, material "failure" is defined as the onset of localized deformation or necking. Consider a sheet of metal being formed into an automobile body panel. If we are to ensure uniform strength and corrosion resistance in the final panel, the operation must be performed in such a way as to maintain uniform sheet thickness. For this application, a more meaningful measure of material ductility would be the *uniform elongation* or the *percent elongation prior to the onset of necking*. This value can be determined by constructing a line parallel to the elastic portion of the diagram, passing through the point of highest force or stress. The intercept where the line crosses the strain axis denotes the available uniform elongation. Since the additional deformation that occurs after necking is not considered, uniform elongation is always less than the total elongation at fracture (the generally reported elongation value).

Another measure of ductility is the *percent reduction in area* that occurs in the necked region of the specimen. This can be computed as

$$\text{R.A.} = \frac{A_o - A_f}{A_o} \times 100\%$$

where A_o is the original cross-sectional area and A_f is the smallest area in the necked region. Percent reduction in area, therefore, can range from 0% (for a brittle glass specimen that breaks with no change in area) to 100% (for extremely plastic soft bubble gum that pinches down to a point before fracture).

When materials fail with little or no ductility, they are said to be *brittle*. Brittleness, however, is simply the lack of ductility and should not be confused with a lack of strength. Strong materials can be brittle, and brittle materials can be strong.

Toughness. *Toughness*, or *modulus of toughness*, is the work per unit volume required to fracture a material. The tensile test can provide one measure of this property, since toughness corresponds to the total area under the stress–strain curve from test initiation to fracture, and thereby encompasses both strength and ductility. Caution should be exercised when using toughness data, however, because the work or energy needed to fracture can vary markedly with different conditions of testing. Variations in the temperature or the speed of loading can significantly alter both the stress–strain curve and the toughness.

In most cases, toughness is associated with impact or shock loadings, and the values obtained from high-speed (dynamic) impact tests often fail to correlate with those obtained from the relatively slow-speed (static) tensile test.

True Stress–True Strain Curves. The stress–strain curve in Figure 2-6 is a plot of *engineering stress, S*, versus *engineering strain, e*, where S is computed as the applied load divided by the original cross-sectional area and e is the elongation, ΔL, divided by the original gage length, L_o. As the test progresses, the cross section of the test specimen changes continually, first in a uniform manner and then nonuniformly after necking begins. The actual stress should be computed based on the instantaneous cross-sectional area, not the original. Since the area is decreasing, the actual or true stress will be greater than the engineering stress plotted in Figure 2-6. *True stress*, σ, can be computed by taking simultaneous readings of the load and the minimum specimen diameter. The actual area can then be computed, and true stress can be determined as

$$\sigma = W/A$$

The determination of *true strain* is a bit more complex. In place of the change in length divided by the original length that was used to compute engineering strain, true strain is defined as the summation of the incremental strains that occur throughout the test. For a specimen that has been stretched from length L_o to length L, the *true*, *natural*, or *logarithmic strain* would be:

$$\varepsilon = \int_{L_o}^{L} \frac{d\ell}{\ell} = \ln \frac{L}{L_o} = 2 \ln \frac{D_o}{D}$$

The last equality makes use of the relationship for cylindrical specimens

$$\frac{L}{L_o} = \frac{A_o}{A} = \frac{D_o^2}{D^2}$$

that applies only up to the onset of necking.

Figure 2-10 depicts the type of curve that results when the data from a uniaxial tensile test are converted to the form of true stress versus true strain. Since the true stress is a measure of the material strength at any point during the test, it will continue to rise even after necking. Data beyond the onset of necking should be used with extreme caution, since the geometry of the neck transforms the stress state from uniaxial tension (stretching in one direction with compensating contractions in the other two) to triaxial tension, in which the material is stretched or restrained in all three directions. Because of the triaxial tension, voids or cracks (Figure 2-11) tend to form in the necked region and serve as a precursor to final fracture. Measurements of the external diameter no longer reflect the true load-bearing area, and the data are further distorted.

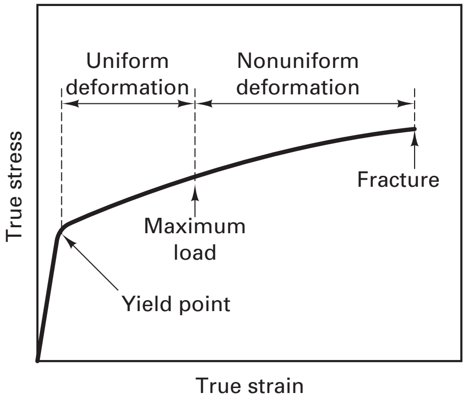

FIGURE 2-10 True stress–true strain curve for an engineering metal.

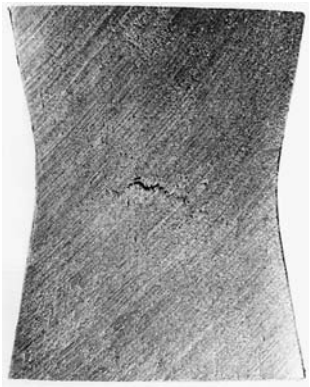

FIGURE 2-11 Section of a tensile test specimen stopped just prior to failure, showing a crack already started in the necked region. *(Courtesy of E. R. Parker.)*

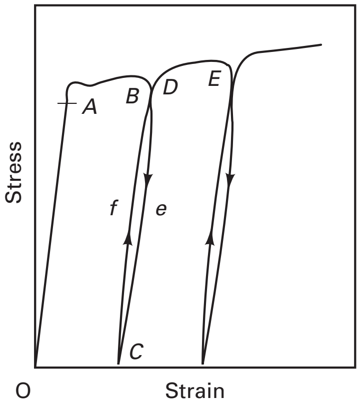

FIGURE 2-12 Stress–strain diagram obtained by unloading and reloading a specimen.

Strain Hardening and the Strain-Hardening Exponent. Figure 2-12 is a true stress–true strain diagram, which has been modified to show how a ductile metal (such as steel) will behave when subjected to slow loading and unloading. Loading and unloading within the elastic region will result in simply cycling up and down the linear portion of the curve between points O and A. However, if the initial loading is carried through point B (in the plastic region), unloading will follow the path BeC, which is approximately parallel to the line OA, and the specimen will exhibit a permanent elongation of the amount OC. Upon reloading from point C, elastic behavior is again observed as the stress follows the line CfD, a slightly different path from that of unloading. Point D is now the yield point or yield stress for the material in its partially deformed state. A comparison of points A and D reveals that plastic deformation has made the material stronger. If the test were again interrupted at point E, we would find a new, even higher-yield stress. Thus, within the region of plastic deformation, each of the points along the true stress–true strain curve represents the yield stress for the corresponding value of strain.

When metals are plastically deformed, they become harder and stronger, a phenomenon known as *strain hardening*. If a stress is capable of producing plastic deformation, an even greater stress will be required to continue the flow. In Chapter 3 we will discuss the atomic-scale features that are responsible for this phenomenon.

Various materials strain-harden at different rates; that is, for a given amount of deformation different materials will exhibit different increases in strength. One method of describing this behavior is to mathematically fit the plastic region of the true stress–true strain curve to the equation

$$\sigma = K\,\varepsilon^n$$

and determine the best-fit value of n, the *strain-hardening exponent.*[2] As shown in Figure 2-13, a material with a high value of n will have a significant increase in material strength with a small amount of deformation. A material with a small n value will show little change in strength with plastic deformation.

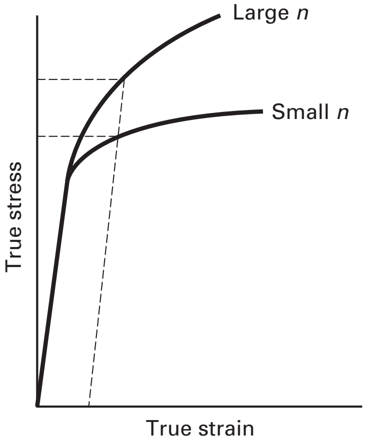

FIGURE 2-13 True stress–true strain curves for metals with large and small strain hardening. Metals with larger n values experience larger amounts of strengthening for a given strain.

Damping Capacity. In Figure 2-12 the unloading and reloading of the specimen follow slightly different paths. The area between the two curves is proportional to the amount of energy that is converted from mechanical form to heat and is therefore absorbed by the material. When this area is large, the material is said to exhibit good *damping capacity* and is able to absorb mechanical vibrations or damp them out quickly. This is an important property in applications such as crankshafts and machinery bases. Gray cast iron is used in many applications because of its high damping capacity. Materials with low damping capacity, such as brass and steel, readily transmit both sound and vibrations.

Rate Considerations. The rate or speed at which a tensile test is conducted can have a significant effect on the various properties. *Strain rate* sensitivity varies widely for engineering materials. Plastics and polymers are very sensitive to testing speed. Steels are also sensitive, but aluminum is rather insensitive. Those materials that are sensitive to speed variations exhibit higher strengths and lower ductility when speed is increased. It is important to recognize that standard testing selects a standard speed, which may or may not correlate with the conditions of product application.

COMPRESSION TESTS

When a material is subjected to compressive loadings, the relationships between stress and strain are similar to those for a tension test. Up to a certain value of stress, the material behaves elastically. Beyond this value, plastic flow occurs. In general, however, a compression test is more difficult to conduct than a standard tensile test. Test specimens must have larger cross-sectional areas to resist bending or buckling. As deformation proceeds, the material strengthens by strain hardening and the cross section of the specimen increases, combining to produce a substantial increase in required load. Friction between

---

[2] Taking the logarithm of both sides of the equation yields $\log \sigma = \log K + n \log \varepsilon$. This is the same form as the equation $y = mx + b$, the equation of a straight line with slope m and intercept b. Therefore, if the true stress–true strain data were plotted on a log-log scale with stress on the y-axis, the slope of the data in the plastic region would be n.

the testing machine surfaces and the ends of the test specimen will alter the results if not properly considered. The type of service for which the material is intended, however, should be the primary factor in determining whether the testing should be performed in tension or compression.

HARDNESS TESTING

The wear resistance and strength of a material can also be evaluated by assessing its "hardness." *Hardness* is actually a hard-to-define property of engineering materials, and a number of different tests have been developed using various phenomena. The most common of the hardness tests are based on resistance to permanent deformation in the form of penetration or indentation. Other tests evaluate resistance to scratching, wear resistance, resistance to cutting or drilling, or elastic rebound (energy absorption under impact loading). Since these phenomena are not the same, the results of the various tests often do not correlate with one another. Caution should be exercised to ensure that the selected test clearly evaluates the phenomena of interest.

Brinell Hardness Test. The *Brinell hardness test* was one of the earliest accepted methods of measuring hardness. A tungsten carbide or hardened steel ball 10 mm in diameter is pressed into the flat surface of a material by a standard load of 500 or 3000 kg, and the load is maintained for 10 to 15 seconds to permit the full amount of plastic deformation to occur. The load and ball are then removed, and the diameter of the resulting spherical indentation (usually in the range of 2 to 5 mm) is measured using a special grid or traveling microscope. The *Brinell hardness number* (BHN) is equal to the load divided by the surface area of the spherical indentation when the units are expressed as kilograms per square millimeter.

In actual practice, the Brinell hardness number is determined from tables that correlate the Brinell number with the diameter of the indentation produced under the various loads. Figure 2-14 shows a typical Brinell tester, along with a schematic of the testing procedure. Portable testers are available for use on pieces that are too large to be brought to a benchtop machine.

The Brinell test measures hardness over a relatively large area and is somewhat indifferent to small-scale variations in the material structure. It is relatively simple and

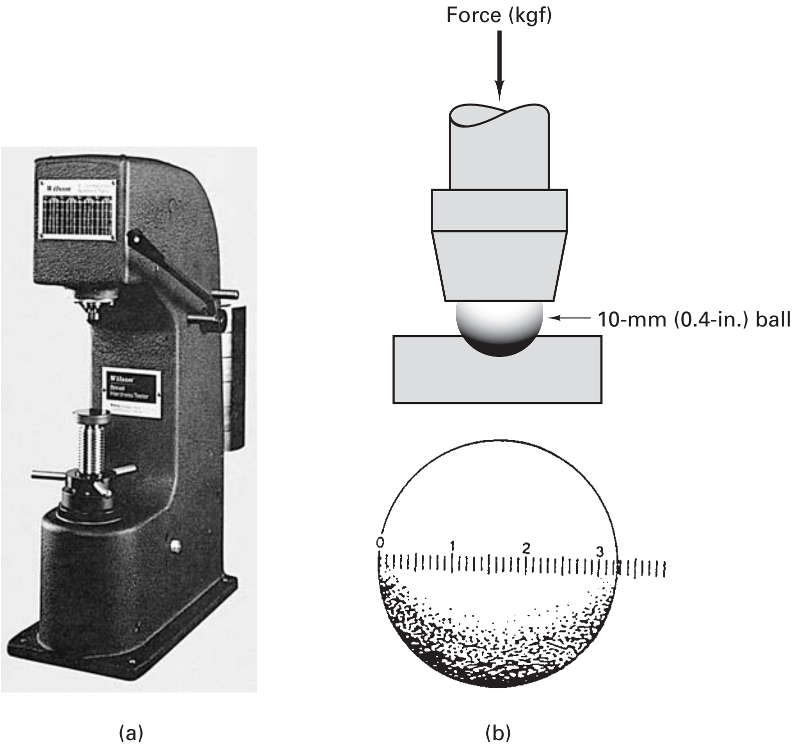

(a) (b)

FIGURE 2-14 (a) Brinell hardness tester; (b) Brinell test sequence showing loading and measurement of the indentation under magnification with a scale calibrated in millimeters. *[(a) Courtesy of Wilson Instruments Division, Instron Corp., Norwood, MA]* easy to conduct, and is used extensively on irons and steels. On the negative side, however, the Brinell test has the following limitations:

1. It cannot be used on very hard or very soft materials.
2. The results may not be valid for thin specimens. It is best if the thickness of material is at least 10 times the depth of the indentation. Some standards specify the minimum hardnesses for which the tests on thin specimens will be considered valid.
3. The test is not valid for case-hardened surfaces.
4. The test must be conducted far enough from the edge of the material so that no edge bulging occurs.
5. The substantial indentation may be objectionable on finished parts.
6. The edge or rim of the indentation may not be clearly defined or may be difficult to see.

The Rockwell Test. The widely used *Rockwell hardness test* is similar to the Brinell test, with the hardness value again being determined through an indentation produced under a static load. Figure 2-15a shows the key features of the Rockwell test. A small indenter, either a small-diameter steel ball or a diamond-tipped cone called a *brale*, is first seated firmly against the material by the application of a 10-kg “minor” load. This causes a slight elastic penetration into the surface and removes the effects of any surface irregularities. The indicator on the screen of the tester, like the one shown in Figure 2-15b, is then set to zero, and a “major” load of 60, 100, or 150 kg is applied to the indenter to produce a deeper penetration (i.e., plastic deformation). When the indicating pointer has come to rest, the major load is removed. With the minor load still applied, the tester now indicates the Rockwell hardness number on either a dial gage or digital display. This number is really an indication of the *depth* of the plastic or permanent penetration that was produced by the major load, with each unit representing a penetration depth of 2 μm.

Different combinations of major loads and indenters are designated by letters and are used for materials with various levels of strength. Table 2-1 provides a partial listing of the Rockwell scales and typical materials for which they are used. Because of the different scales, a Rockwell hardness number must be accompanied by the letter corresponding to the particular combination of load and indenter used in its determination. The notation R_C60 (or Rockwell C 60), for example, indicates that a 120° diamond-tipped brale indenter was used in combination with a major load of 150 kg, and

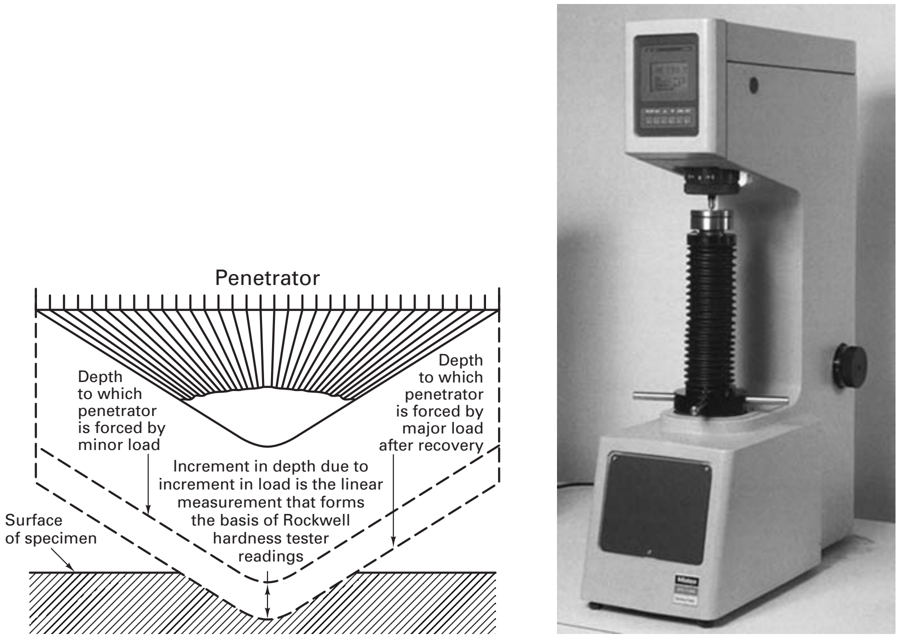

FIGURE 2-15 (a) Operating principle of the Rockwell hardness tester; (b) typical Rockwell hardness tester with digital readout. *[(a) Courtesy of Wilson Instruments Division, Instron Corp., Norwood, MA; (b) courtesy of MTI Corporation, Aurora, IL.]*

TABLE 2-1 Some Common Rockwell Hardness Tests

Scale Symbol	Penetrator	Load (kg)	Typical Materials
A	Brale	60	Cemented carbides, thin steel, shallow case-hardened steel
B	$\frac{1}{16}$-in. ball	100	Copper alloys, soft steels, aluminum alloys, malleable iron
C	Brale	150	Steel, hard cast irons, titanium, deep case-hardened steel
D	Brale	100	Thin steel, medium case-hardened steel
E	$\frac{1}{8}$-in. ball	100	Cast iron, aluminum, magnesium
F	$\frac{1}{16}$-in. ball	60	Annealed coppers, thin soft sheet metals
G	$\frac{1}{16}$-in. ball	150	Hard copper alloys, malleable irons
H	$\frac{1}{8}$-in ball	60	Aluminum, zinc, lead

a reading of 60 was obtained. The B and C scales are used more extensively than the others, with B being common for copper and aluminum and C for steels.[3]

Rockwell tests should not be conducted on thin materials (typically less than 1.5 mm or 1/16 in.), on rough surfaces, or on materials that are not homogeneous, such as gray cast iron. Because of the small size of the indentation, variations in roughness, composition, or structure can greatly influence test results. For thin materials, or where a very shallow indentation is desired (as in the evaluation of surface-hardening treatments such as nitriding or carburizing), the *Rockwell superficial hardness test* is preferred. Operating on the same Rockwell principle, this test employs smaller major and minor loads (15 or 45 kg and 3 kg, respectively) and uses a more sensitive depth-measuring device.

In comparison with the Brinell test, the Rockwell test offers the attractive advantage of direct readings in a single step. Because it requires little (if any) surface preparation and can be conducted quite rapidly (up to 300 tests per hour or 5 per minute), it is often used for quality control purposes, such as determining if an incoming product meets specification, assuring that a heat treatment was performed properly, or simply monitoring the properties of products at various stages of manufacture. It has the additional advantage of producing a small indentation that can be easily concealed on the finished product or easily removed in a later operation.

Vickers Hardness Test. The *Vickers hardness test* is also similar to the Brinell test but uses a 136° square-based diamond pyramid as the indenter and loads between 1 and 120 kg. Like the Brinell value, the Vickers hardness number is also defined as load divided by the surface area of the indentation expressed in units of kilograms per square millimeter. The advantages of the Vickers approach include increased accuracy in determining the diagonal of a square impression as opposed to the diameter of a circle and the assurance that even light loads will produce some plastic deformation. The use of diamond as the indenter material enables the test to evaluate any material and effectively places the hardness of all materials on a single scale.

Like the other indentation or penetration methods, the Vickers test has a number of attractive features: (1) it is simple to conduct, (2) little time is involved, (3) little surface preparation is required, (4) the marks are quite small and are easily hidden or removed, (5) the test can be done on location, (6) it is relatively inexpensive, and (7) it provides results that can be used to evaluate material strength or assess product quality.

Microhardness Tests. Various *microhardness tests* have been developed for applications where it is necessary to determine the hardness of a very precise area of material or where the material or modified surface layer is exceptionally thin. These tests might be more appropriately termed *microindentation* hardness tests, since it is the size of the indentation that is extremely small, not the measured value of hardness. Special machines, such as the one shown in Figure 2-16,

FIGURE 2-16 Microhardness tester. *(Courtesy of LECO Corporation. St. Joseph, MI)*

---

[3] The Rockwell C number is computed as 100 − (depth of penetration in μm/2 μm), while the Rockwell B number is 130 − (depth of penetration in μm/2 μm).

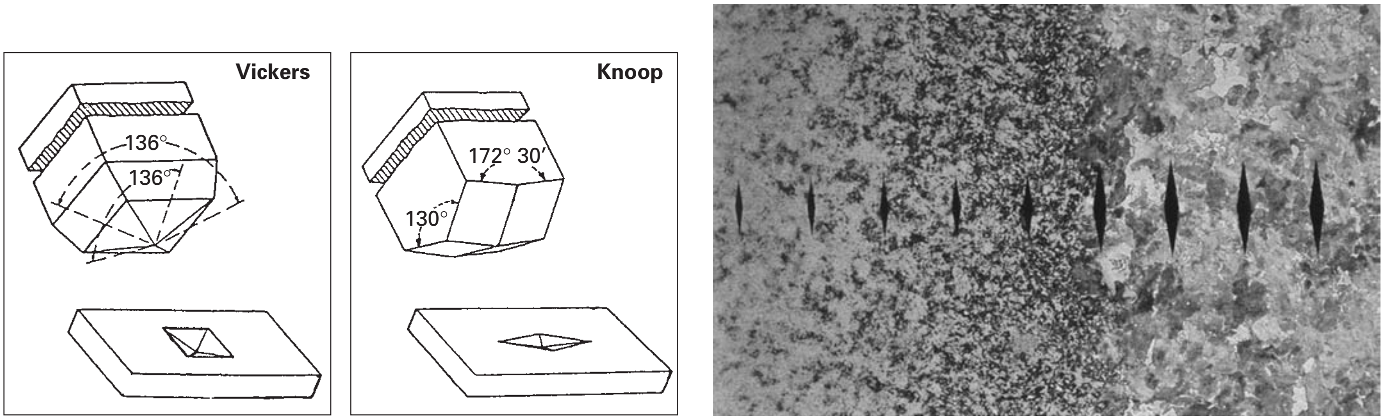

(a) (b)

FIGURE 2-17 (a) Comparison of the diamond-tipped indenters used in the Vickers and Knoop hardness tests. (b) Series of Knoop hardness indentations progressing left-to-right across a surface-hardened steel specimen (hardened surface to unhardened core). *(Courtesy Buehler Ltd., Lake Bluff, IL.)*

have been constructed for this type of testing. The location for the test is selected under high magnification. A small diamond penetrator is then loaded with a predetermined load ranging from 25 to 3600 g. In the *Knoop test*, an elongated diamond-shaped indenter (long diagonal seven times the short diagonal) is used and the length of the indentation is measured with the aid of a microscope. Figure 2-17 compares the indenters for the Vickers and Knoop tests, and shows a series of Knoop indentations progressing left-to-right across a surface-hardened steel specimen, from the hardened surface to the unhardened core. The hardness value, known as the *Knoop hardness number*, is again obtained by dividing the load in kilograms by the projected area of the indentation, expressed in square millimeters. A light-load Vickers test can also be used to determine microhardness.

FIGURE 2-18 Durometer hardness tester. *(Courtesy of Newage Testing Instruments, Southampton, PA.)*

Other Hardness Determinations. When testing soft, elastic materials, such as rubbers and nonrigid plastics, a *durometer* can be used. This instrument, shown in Figure 2-18, measures the resistance of a material to elastic penetration by a spring-loaded conical steel indenter. No permanent deformation occurs. A similar test, used to evaluate the strength of molding sands used in the foundry industry, will be described in Chapter 14.

In the *scleroscope* test, hardness is measured by the rebound of a small diamond-tipped "hammer" that is dropped from a fixed height onto the surface of the material to be tested. This test evaluates the resilience of a material, and the surface on which the test is conducted must have a fairly high polish to yield good results. Because the test is based on resilience, scleroscope hardness numbers should only be used to compare similar materials. A comparison between steel and rubber, for example, would not be valid.

Another definition of hardness is the ability of a material to resist being scratched. A crude but useful test that employs this principle is the *file test*, where one determines if a material can be cut by a simple metalworking file. The test can be either a pass–fail test using a single file or a semiquantitative evaluation using a series of files that have been pretreated to various levels of known hardness.

Relationships among the Various Hardness Tests. Since the various hardness tests often evaluate different material phenomena, there are no simple relationships between the different types of hardness numbers. Approximate relationships have been developed, however, by testing the same material on a variety of devices. Table 2-2 presents a correlation of hardness values for plain carbon and low-alloy steels. It may be noted that for Rockwell C numbers above 20, the Brinell values are approximately 10 times the Rockwell number. Also, for Brinell values below 320, the Vickers and Brinell values agree quite closely. Since the relationships among the various tests will differ with material, mechanical processing, and heat treatment, correlations such as Table 2-2 should be used with caution.

TABLE 2-2 Hardness Conversion Table for Steels

Brinell Number	Vickers Number	Rockwell Number		Scleroscope Number	Tensile Strength	
		C	B		ksi	MPa
	940	68		97	368	2537
757[a]	860	66		92	352	2427
722[a]	800	64		88	337	2324
686[a]	745	62		84	324	2234
660[a]	700	60		81	311	2144
615[a]	655	58		78	298	2055
559[a]	595	55		73	276	1903
500	545	52		69	256	1765
475	510	50		67	247	1703
452	485	48		65	238	1641
431	459	46		62	212	1462
410	435	44		58	204	1407
390	412	42		56	196	1351
370	392	40		53	189	1303
350	370	38	110	51	176	1213
341	350	36	109	48	165	1138
321	327	34	108	45	155	1069
302	305	32	107	43	146	1007
285	287	30	105	40	138	951
277	279	28	104	39	34	924
262	263	26	103	37	128	883
248	248	24	102	36	122	841
228	240	20	98	34	116	800
210	222	17	96	32	107	738
202	213	14	94	30	99	683
192	202	12	92	29	95	655
183	192	9	90	28	91	627
174	182	7	88	26	87	600
166	175	4	86	25	83	572
159	167	2	84	24	80	552
153	162		82	23	76	524
148	156		80	22	74	510
140	148		78	22	71	490
135	142		76	21	68	469
131	137		74	20	66	455
126	132		72	20	64	441
121	121		70		62	427
112	114		66		58	

[a] Tungsten, carbide ball; others, standard ball.

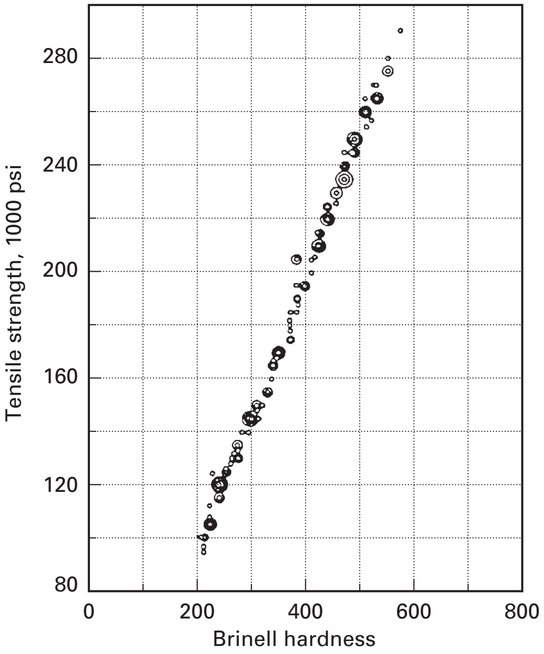

FIGURE 2-19 Relationship of hardness and tensile strength for a group of standard alloy steels. *(Courtesy of ASM International, Materials Park, OH.)*

Relationship of Hardness to Tensile Strength. Table 2-2 and Figure 2-19 show a definite relationship between tensile strength and hardness. For plain carbon and low-alloy steels, the tensile strength (in pounds per square inch) can be estimated by multiplying the Brinell hardness number by 500. In this way, an inexpensive and quick hardness test can be used to provide a close approximation of the tensile strength of the steel. For other materials, however, the relationship is different and may even exhibit too much variation to be dependable. The multiplying factor for age-hardened aluminum is about 600, while for soft brass it is around 800.

■ 2.3 DYNAMIC PROPERTIES

In many engineering applications, products or components are subjected to various types of dynamic loading. These may include (1) sudden impacts or loads that vary rapidly in magnitude, (2) repeated cycles of loading and unloading, or (3) frequent changes in the mode of loading, such as from tension to compression. To handle these conditions, we must be able to characterize the mechanical properties of engineering materials under dynamic loadings.

Most dynamic tests subject standard specimens to a well-controlled set of test conditions. The conditions of actual application, however, rarely duplicate the controlled conditions of a standardized test. While identical tests on different materials can indeed provide a comparison of material behavior, the assumption that similar results can be expected for similar conditions may not always be true. Since dynamic conditions can vary greatly, the quantitative results of standardized tests should be used with extreme caution, and one should always be aware of the test limitations.

IMPACT TEST

Several tests have been developed to evaluate the *toughness* or fracture resistance of a material when it is subjected to a rapidly applied load, or impact. Of the tests that have become common, two basic types have emerged: (1) bending impacts, which include the standard Charpy and Izod tests, and (2) tension impacts.

The bending impact tests utilize specimens that are supported as beams. In the *Charpy test*, shown schematically in Figure 2-20, the standard specimen is a square bar containing a V-, keyhole-, or U-shaped notch. The test specimen is positioned horizontally, supported on the ends, and an impact is applied to the center, behind the notch, to complete a three-point bending. The *Izod test* specimen, while somewhat similar in size

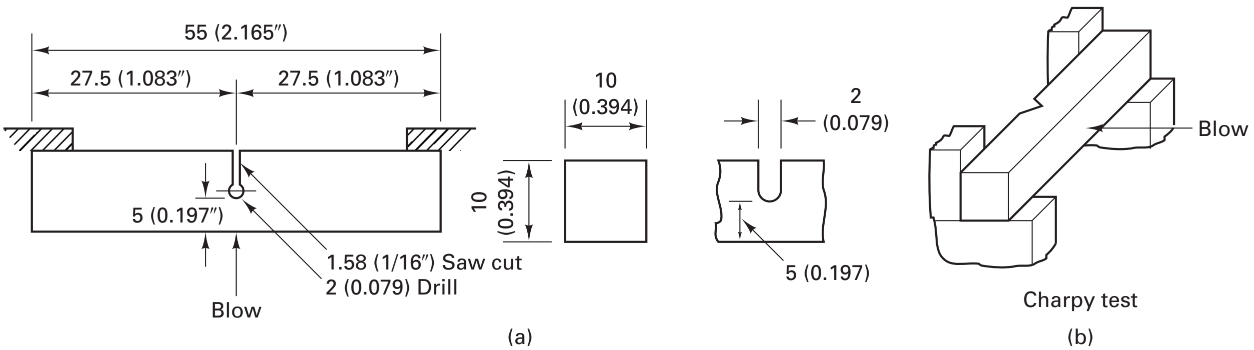

FIGURE 2-20 (a) Standard Charpy impact specimens. Illustrated are keyhole and U notches; dimensions are in millimeters with inches in parentheses. (b) Standard V-notch specimen showing the three-point bending type of impact loading.

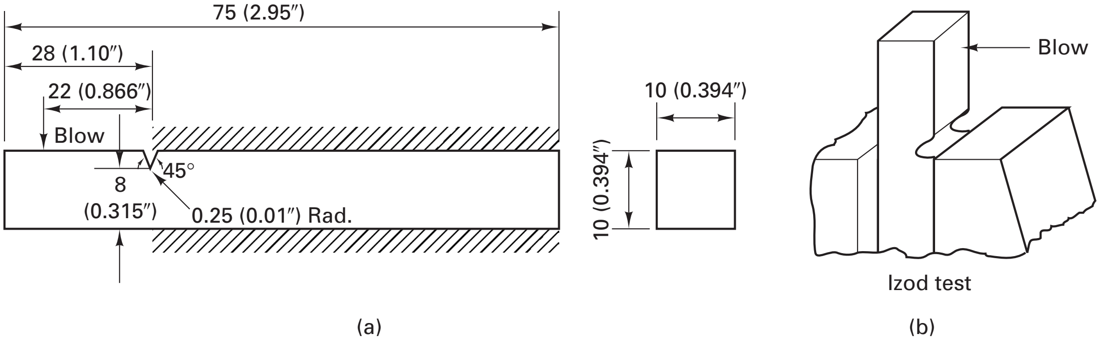

FIGURE 2-21 (a) Izod impact specimen; (b) cantilever mode of loading in the Izod test.

and appearance, is supported vertically as a cantilever beam and is impacted on the unsupported end, striking from the side of the notch (Figure 2-21). Impact testers, like the one shown in Figure 2-22, supply a predetermined impact energy in the form of a swinging pendulum. After breaking or deforming the specimen, the pendulum continues its upward swing with an energy equal to its original minus that absorbed by the impacted specimen. The loss of energy is measured by the angle that the pendulum attains during its upward swing.

The test specimens for bending impacts must be prepared with geometric precision to ensure consistent and reproducible results. Notch profile is extremely critical, for the test measures the energy required to both initiate and propagate a fracture. The effect of notch profile is shown dramatically in Figure 2-23. Here two specimens have been made from the same piece of steel with the same reduced cross-sectional area. The one with the keyhole notch fractures and absorbs only 43 ft-lb of energy, whereas the unnotched specimen resists fracture and absorbs 65 ft-lb during the impact.

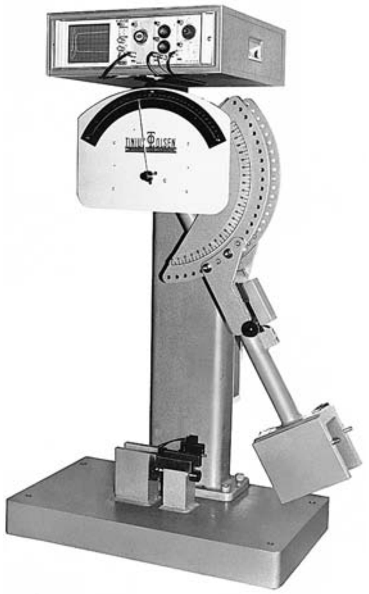

FIGURE 2-22 Impact testing machine. *(Courtesy of Tinius Olsen Inc., Horsham, PA.)*

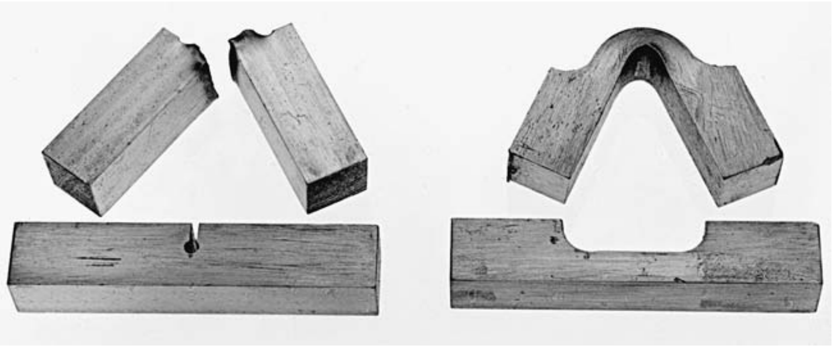

FIGURE 2-23 Notched and unnotched impact specimens before and after testing. Both specimens had the same cross-sectional area, but the notched specimen fractures while the other doesn't.

Caution should also be placed on the use of impact data for design purposes. The test results apply only to standard specimens containing a standard notch. Moreover, the tests evaluate material behavior under very specific conditions. Changes in the form of the notch, minor variations in the overall specimen geometry, or faster or slower rates of loading (speed of the pendulum) can all produce significant changes in the results. Under conditions of sharp notches, wide specimens, and rapid loading, many ductile materials lose their energy-absorbing capability and fail in a brittle manner. [For example, the standard impact test should not be used to evaluate materials for bullet-proof armor, since the velocities of loading are extremely different.]

The results of standard tests, however, can be quite valuable in assessing a material's sensitivity to notches and the multiaxial stresses that exist around a notch. Materials whose properties vary with notch geometry are termed *notch-sensitive*. Good surface finish and the absence of scratches, gouges, and defects in workmanship will be key to satisfactory performance. Materials that are *notch-insensitive* can often be used with as-cast or rough-machined surfaces with no risk of premature failure.

Impact testing can also be performed at a variety of temperatures. As will be seen later in this chapter, the evaluation of how fracture resistance changes with temperature can be crucial to success when selecting engineering materials for low-temperature service.

The *tensile impact test*, illustrated schematically in Figure 2-24, eliminates the use of a notched specimen and thereby avoids many of the objections inherent in the Charpy and Izod tests. Turned specimens are subjected to uniaxial impact loadings applied through drop weights, modified pendulums, or variable-speed flywheels.

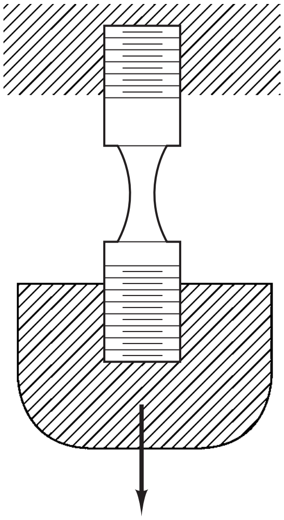

FIGURE 2-24 Tensile impact test.

FATIGUE AND THE ENDURANCE LIMIT

Materials can also fail by fracture if they are subjected to repeated applications of stress, even though the peak stresses have magnitudes less than the ultimate tensile strength and usually less than the yield strength. This phenomenon, known as *fatigue*, can result from either the cyclic repetition of a particular loading cycle or entirely random variations in stress. Almost 90% of all metallic fractures are in some degree attributed to fatigue.

For experimental simplicity, a periodic, sinusoidal loading is often utilized, and conditions of equal-magnitude tension–compression reversals provide further simplification. These conditions can be achieved by placing a cylindrical specimen in a rotating drive and hanging a weight so as to produce elastic bending along the axis, as shown in Figure 2-25. As a result of the elastic bending, material at the bottom of the specimen is stretched, or loaded in tension, while material on the top surface is compressed. As the specimen turns, the surface of the specimen experiences a sinusoidal application of tension and compression with each rotation.

By conducting multiple tests, subjecting identical specimens to different levels of maximum loading, and recording the number of cycles necessary to achieve fracture, curves such as that in Figure 2-26 can be produced. These curves are known as *stress versus number of cycles*, or *S–N, curves*. If the material being evaluated in Figure 2-26 were subjected to a standard tensile test, it would require a stress in excess of 480 MPa (70,000 psi) to induce failure. Under cyclic loading with a peak stress of only 380 MPa

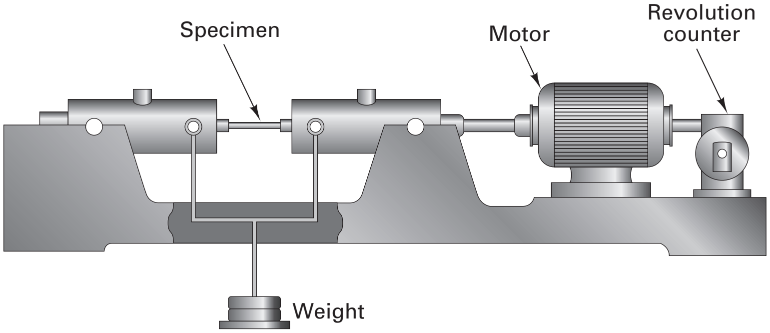

FIGURE 2-25 Schematic diagram of a Moore rotating-beam fatigue machine. *(Adapted from Hayden et al.,* "The Structure and Properties of Materials", *Vol 3, p. 15, Wiley, 1965.)*

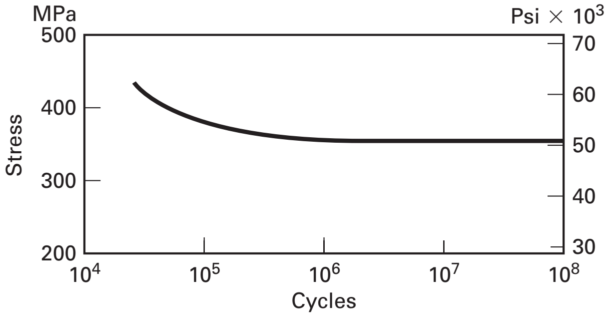

FIGURE 2-26 Typical $S-N$ curve for steel showing an endurance limit. Specific numbers will vary with the type of steel and treatment.

(55,000 psi), the specimen will fail after about 100,000 cycles. If the peak stress were further reduced to 350 MPa (51,000 psi), the fatigue lifetime would be extended by an order of magnitude to approximately 1,000,000 cycles. With a further reduction to any value below 340 MPa (49,000 psi), the specimen would not fail by fatigue, regardless of the number of stress application cycles.

The stress below which the material will not fail regardless of the number of load cycles is known as the *endurance limit* or *endurance strength*, and may be an important criterion in many designs. Above this value, any point on the curve is the *fatigue strength*, the maximum stress that can be sustained for a specified number of loading cycles.

A different number of loading cycles is generally required to determine the endurance limit for different materials. For steels, 10 million cycles are usually sufficient. For several of the nonferrous metals, 500 million cycles may be required. For aluminum, the curve continues to drop such that, if aluminum has an endurance limit, it is at such a low value that a cheaper and much weaker material could be used. In essence, if aluminum is used under realistic stresses and cyclic loading, it will fail by fatigue after a finite lifetime.

The fatigue resistance of an actual product is sensitive to a number of additional factors. One of the most important of these is the presence of stress raisers (or stress concentrators), such as sharp corners, small surface cracks, machining marks, or surface gouges. Data for the *S–N* curves are obtained from polished-surface, "flaw-free" specimens, and the reported lifetime is the cumulative number of cycles required to initiate a fatigue crack and then grow or propagate it to failure. If a part already contains a surface crack or flaw, the number of cycles required for crack initiation can be reduced significantly. In addition, the stress concentrator magnifies the stress experienced at the tip of the crack, accelerating the rate of subsequent crack growth. Great care should be taken to eliminate stress raisers and surface flaws on parts that will be subjected to cyclic loadings. Proper design and good manufacturing practices are often more important than material selection and heat treatment.

Operating temperature can also affect the fatigue performance of a material. Figure 2-27 shows *S–N* curves for Inconel 625 (a high-temperature Ni–Cr–Fe alloy) determined over a range of temperatures. As temperature is increased, the fatigue strength drops significantly. Since most test data are generated at room temperature, caution should be exercised when the product application involves elevated service temperatures.

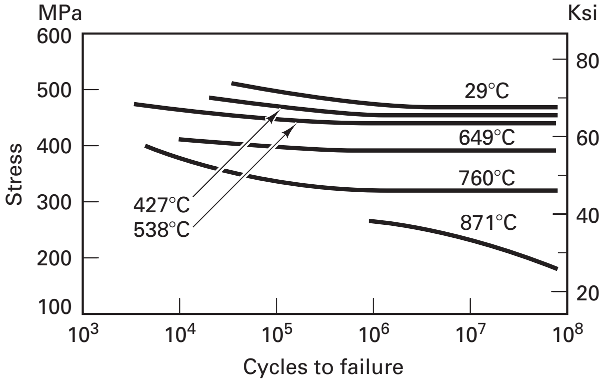

FIGURE 2-27 Fatigue strength of Inconel alloy 625 at various temperatures. *(Courtesy of Huntington Alloy Products Division, The International Nickel Company, Inc., Toronto, Canada.)*

Fatigue lifetime can also be affected by changes in the environment. When metals are subjected to corrosion during cyclic loadings, the condition is known as corrosion fatigue, and both specimen lifetime and the endurance limit can be significantly reduced. Moreover, the nature of the environmental attack need not be severe. For some materials, tests conducted in air have been shown to have shorter lifetimes than those run in a vacuum, and further lifetime reductions have been observed with increasing levels of humidity. The test results can also be dependent on the frequency of the loading cycles. For slower frequencies, the environment has a longer time to act between loadings. At high frequencies, the environmental effects may be somewhat masked. The application of test data to actual products, therefore, requires considerable caution.

Residual stresses can also alter fatigue behavior. If the specimen surface is in a state of compression, such as that produced from shot peening, carburizing, or burnishing, it is more difficult to initiate a fatigue crack, and lifetime is extended. Conversely, processes that produce residual tension on the surface, such as welding or machining, can significantly reduce the fatigue lifetime of a product.

If the magnitude of the load varies during service, the fatigue response can be extremely complex. For example, consider the wing of a commercial airplane. As the wing vibrates during flight, the wing–fuselage joint is subjected to a large number of low–stress loadings. The large number of these load applications may be far less damaging, however, than a few high-stress loadings, like those that occur when the plane contacts the runway during landing. From a different perspective, however, the heavy loads may be sufficient to stretch and blunt a sharp fatigue crack, requiring many additional small-load cycles to "reinitiate" it. Evaluating how materials respond to complex patterns of loading is an area of great importance to design engineers.

Since reliable fatigue data may take a considerable time to generate, we may prefer to estimate fatigue behavior from properties that can be determined more quickly. Table 2-3 shows the approximate ratio of the endurance limit to the ultimate tensile strength for several engineering metals. For many steels the endurance limit can be approximated by 0.5 times the ultimate tensile strength as determined by a standard tensile test. For the nonferrous metals, however, the ratio is significantly lower.

TABLE 2-3 Ratio of Endurance Limit to Tensile Strength for Various Materials

Material	Ratio
Aluminum	0.38
Beryllium copper (heat-treated)	0.29
Copper, hard	0.33
Magnesium	0.38
Steel	
AISI 1035	0.46
Screw stock	0.44
AISI 4140 normalized	0.54
Wrought iron	0.63

FATIGUE FAILURES

Components that fail as a result of repeated or cyclic loadings are commonly called *fatigue failures*. These fractures form a major part of a larger group known as progressive fractures. Consider the fracture surface shown in Figure 2-28. The two arrows identify the points of fracture initiation, which often correspond to discontinuities in the form of surface cracks, sharp corners, machining marks, or even "metallurgical notches," such as an abrupt change in metal structure. With each repeated application of load, the stress at the tip of the crack exceeds the strength of the material, and the crack grows a very small amount. Crack growth continues with each successive application of load until the remaining cross section is no longer sufficient to withstand the peak stresses. Sudden overload fracture then occurs through the remainder of the material. The overall fracture surface tends to exhibit two distinct regions: a smooth, relatively flat region where the crack was propagating by cyclic fatigue, and a coarse, ragged region, corresponding to the ductile overload tearing.

FIGURE 2-28 Progressive fracture of an axle within a ball-bearing ring, starting at two points (arrows).

The smooth areas of the fracture often contain a series of parallel ridges radiating outward from the origin of the crack. These ridges may not be visible under normal examination, however. They may be extremely fine; they may have been obliterated by a rubbing action during the compressive stage of repeated loading; or they may be very few in number if the failure occurred after only a few cycles of loading ("low-cycle fatigue"). Electron microscopy may be required to reveal the ridges, or *fatigue striations*, that are characteristic of fatigue failure. Figure 2-29 shows an example of these markings at high magnification.

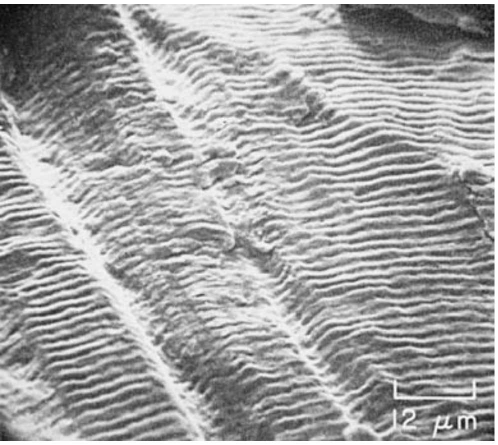

FIGURE 2-29 Fatigue fracture of AISI type 304 stainless steel viewed in a scanning electron microscope at 810X. Well-defined striations are visible. *(From "Interpretation of SEM Fractographs," Metals Handbook, Vol. 9, 8th ed., ASM International, Materials Park, OH, 1970, p. 70.)*

For some fatigue failures, the overload area may exhibit a crystalline appearance, and the failure is sometimes attributed to the metal having "crystallized." As will be noted in Chapter 3, engineering metals are almost always crystalline materials. The final overload fracture simply propagated along the intercrystalline surfaces (grain boundaries) and revealed the already-existing crystalline nature of the material. The conclusion that the material crystallized is totally erroneous, and the term is a definite misnomer.

Another common error is to classify all progressive-type failures as fatigue failures. Other progressive failure mechanisms, such as creep failure and stress–corrosion cracking, will also produce the characteristic two-region fracture. In addition, the same mechanism can produce fractures with different appearances depending on the magnitude of the load, type of loading (torsion, bending, or tension), temperature, and operating environment. Correct interpretation of a metal failure generally requires far more information than that acquired by a visual examination of the fracture surface.

A final misconception regarding fatigue failures is to assume that the failure is time dependent. The failure of materials under repeated loads below their static strength is primarily a function of the magnitude and number of loading cycles. If the frequency of loading is increased, the time to failure should decrease proportionately. If the time does not change, the failure is dominated by one or more environmental factors, and fatigue is a secondary component.

2.4 TEMPERATURE EFFECTS (BOTH HIGH AND LOW)

The test data used in design and engineering decisions should always be obtained under conditions that simulate those of actual service. A number of engineered structures, such as aircraft, space vehicles, gas turbines, and nuclear power plants, are required to operate under temperatures as low as −130°C (−200°F) or as high as 1250°C (2300°F). To cover these extremes, the designer must consider both the short- and long-range effects of temperature on the mechanical and physical properties of the material being considered. From a manufacturing viewpoint, the effects of temperature are equally important. Numerous manufacturing processes involve heat, and the elevated temperature and processing may alter the material properties in both favorable and unfavorable ways. A material can often be processed successfully, or economically, only because heating or cooling can be used to change its properties.

Elevated temperatures can be quite useful in modifying the strength and ductility of a material. Figure 2-30 summarizes the results of tensile tests conducted over a wide range of temperatures using a medium-carbon steel. Similar effects are presented for magnesium in Figure 2-31. As expected, an increase in temperature will typically induce a decrease in strength and hardness and an increase in elongation. For manufacturing operations such as metalforming, heating to elevated temperature may be extremely attractive because the material is now both weaker and more ductile.

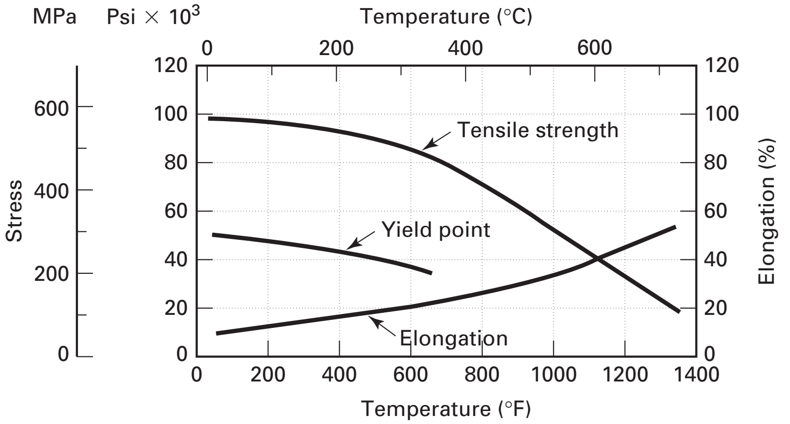

FIGURE 2-30 The effects of temperature on the tensile properties of a medium-carbon steel.

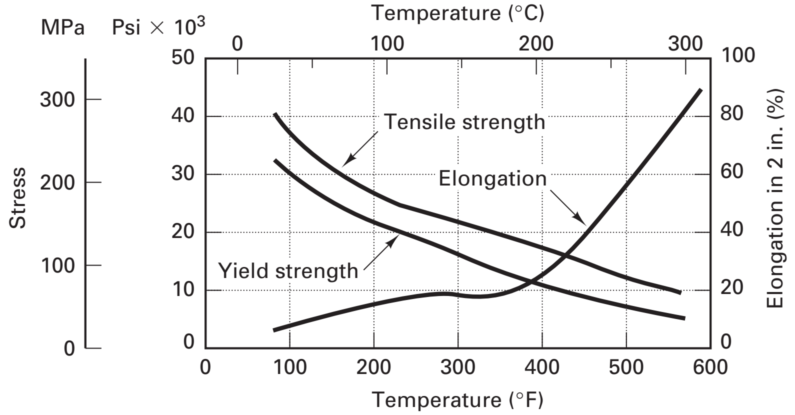

FIGURE 2-31 The effects of temperature on the tensile properties of magnesium.

Figure 2-32 shows the combined effects of temperature and strain rate (speed of testing) on the ultimate tensile strength of copper. For a given temperature, the *rate of deformation* can also have a strong influence on mechanical properties. Room-temperature standard-rate tensile test data will be of little value if the application involves a material being hot-rolled at speeds of 1300 m/min (5000 ft/min).

The effect of temperature on impact properties became the subject of intense study in the 1940s when the increased use of welded-steel construction led to catastrophic failures of ships and other structures while operating in cold environments. Welding produces a monolithic (single-piece) product where cracks can propagate through a joint and continue on to other sections of the structure! Figure 2-33 shows the effect of decreasing temperature on the impact properties of two low-carbon steels. Although similar in form, the two curves are significantly different. The steel indicated by the solid line becomes brittle (requires very little energy to fracture) at temperatures below −4°C (25°F) while the other steel retains good fracture resistance down to −26°C (−15°F). The temperature at which the response goes from high energy absorption to low energy absorption is known as the *ductile-to-brittle transition temperature*. While all steels tend to exhibit this transition, the temperature at which it occurs varies with carbon content and alloy. Special caution should be taken, therefore, when selecting steels for low-temperature applications.

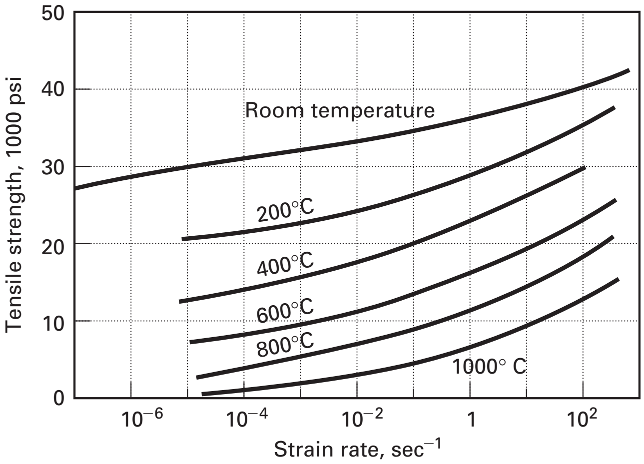

FIGURE 2-32 The effects of temperature and strain rate on the tensile strength of copper. *(From A. Nadai and M. J. Manjoine,* Journal of Applied Mechanics, *Vol. 8, 1941, p. A82, courtesy of ASME.)*

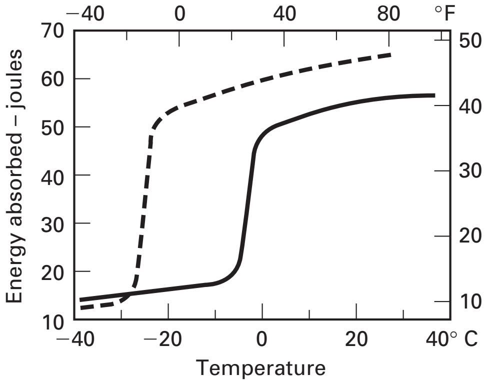

FIGURE 2-33 The effect of temperature on the impact properties of two low-carbon steels.

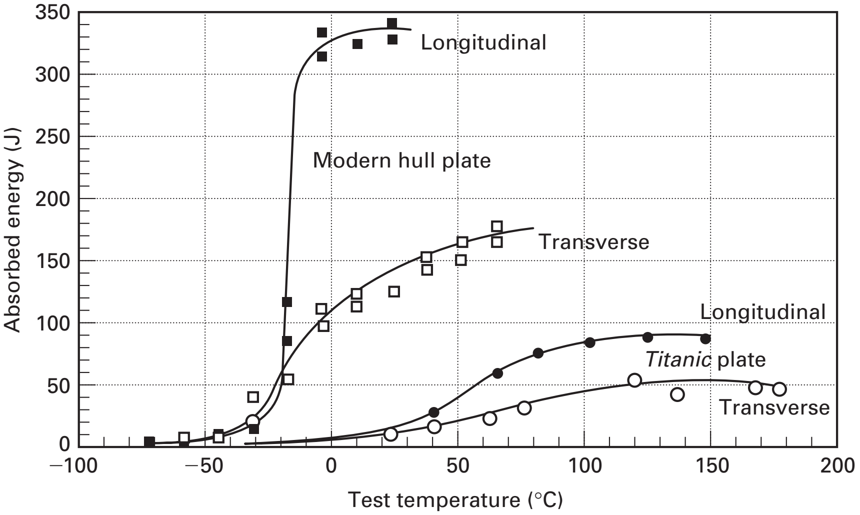

FIGURE 2-34 Longitudinal and transverse notch toughness impact data: steel from the *Titanic* versus modern steel plate, with both longitudinal and transverse specimens. *(Courtesy I&SM, September 1999, p. 33, Iron and Steel Society, Warrendale, PA.)*

Figure 2-34 shows the ductile-to-brittle transition temperature for steel salvaged from the *Titanic* compared to currently used ship plate material. While both are quality materials for their era, the *Titanic* steel has a much higher transition temperature and is generally more brittle. Recalling that the water temperature at the time the *Titanic* struck the iceberg was −2°C, the results show that the steel would have been quite brittle. Two curves are provided for each material, reflecting specimens in different orientation with respect to the direction of product rolling. Here we see that processing features can further affect the properties and performance of a material.

CREEP

Long-term exposure to elevated temperatures can also lead to failure by a phenomenon known as *creep*. If a tensile-type specimen is subjected to a constant load at elevated temperature, it will elongate continuously until rupture occurs, even though the applied stress is below the yield strength of the material at the temperature of testing. While the rate of elongation is often quite small, creep can be an important consideration when designing equipment such as steam or gas turbines, power plant boilers, and other devices that operate under loads or pressures for long periods of time at high temperature.

If a test specimen is subjected to conditions of fixed load and fixed elevated temperature, an elongation-versus-time plot can be generated, similar to the one shown in Figure 2-35. The curve contains three distinct stages: a short-lived initial stage, a rather long second stage where the elongation rate is somewhat linear, and a short-lived third stage leading to fracture. Two significant pieces of engineering data are obtained from this curve: the rate of elongation in the second stage, or *creep rate*, and the total elapsed

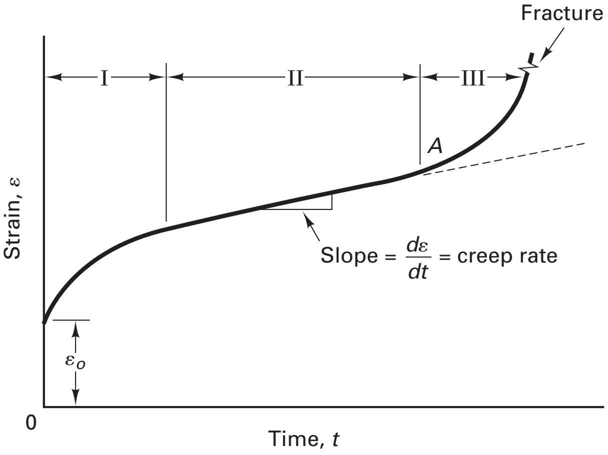

FIGURE 2-35 Creep curve for a single specimen at a fixed temperature, showing the three stages of creep and reported creep rate. Note the nonzero strain at time zero due to the initial application of the load.

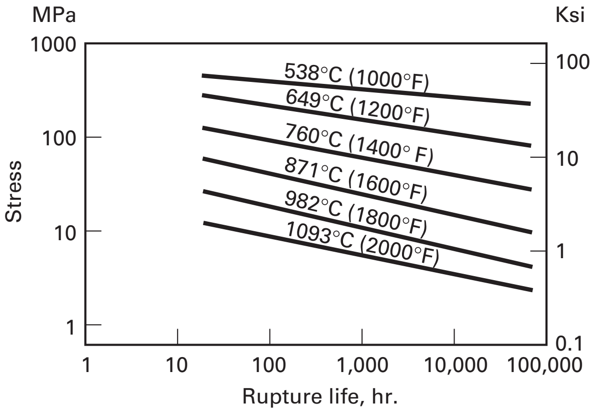

FIGURE 2-36 Stress–rupture diagram of solution-annealed Incoloy alloy 800 (Fe–Ni–Cr alloy). *(Courtesy of Huntington Alloy Products Division, The International Nickel Company, Inc., Toronto, Canada.)*

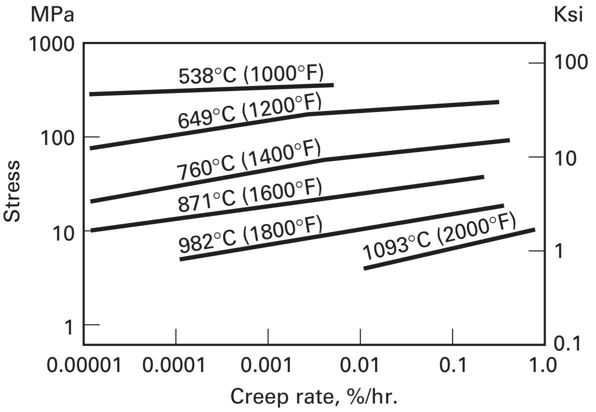

FIGURE 2-37 Creep-rate properties of solution-annealed Incoloy alloy 800. *(Courtesy of Huntington Alloy Products Division, The International Nickel Company, Inc., Toronto, Canada.)*

time to rupture. These results are unique to the material being tested and the specific conditions of the test. Tests conducted at higher temperatures or with higher applied loads would exhibit higher creep rates and shorter rupture times.

When creep behavior is a concern, multiple tests are conducted over a range of temperatures and stresses, and the rupture time data are collected into a single *stress–rupture diagram*, like the one shown in Figure 2-36. This simple engineering tool provides an overall picture of material performance at elevated temperature. In a similar manner, creep-rate data can also be plotted to show the effects of temperature and stress. Figure 2-37 presents a creep-rate diagram for a high-temperature nickel-based alloy.

■ 2.5 MACHINABILITY, FORMABILITY, AND WELDABILITY

While it is common to assume that the various "-ability" terms also refer to specific material properties, they actually refer to the way a material responds to specific processing techniques. As a result, they can be quite nebulous. *Machinability*, for example, depends not only on the material being machined but also on the specific machining process; the conditions of that process, such as cutting speed; and the aspects of that process that are of greatest interest. Machinability ratings are generally based on relative tool life. In certain applications, however, we may be more interested in how easy a metal is to cut, or how it performs under high-speed machining, and less interested in the tool life or the resulting surface finish. For other applications, surface finish or the formation of fine chips may be the most desirable feature. As a result, the term *machinability* may mean different things to different people, and it frequently involves multiple properties of a material interacting with the conditions of a process.

In a similar manner, *malleability*, *workability*, and *formability* all refer to a material's suitability for plastic deformation processing. Since a material often behaves differently at different temperatures, a material with good "hot formability" may have poor deformation characteristics at room temperature. Furthermore, materials that flow nicely at low deformation speeds may behave in a brittle manner when loaded at rapid rates. Formability, therefore, needs to be evaluated for a specific combination of material, process, and process conditions. The results cannot be extrapolated or transferred to other processes or process conditions. Likewise, the *weldability* of a material may also depend on the specific welding or joining process and the specific process parameters.

■ 2.6 FRACTURE TOUGHNESS AND THE FRACTURE MECHANICS APPROACH

A discussion of the mechanical properties of materials would not be complete without mention of the many tests and design concepts based on the fracture mechanics approach. Instead of treating test specimens as flaw-free materials, fracture mechanics begins with the premise that *all materials contain flaws or defects of some given size*. These may be *material defects*, such as pores, cracks, or inclusions; *manufacturing defects*, in the form of machining marks, arc strikes, or contact damage to external surfaces; or *design defects*, such as abrupt section changes, excessively small fillet radii, and holes. When the specimen is subjected to loads, the applied stresses are amplified or intensified in the vicinity of these defects, potentially causing accelerated failure or failure under unexpected conditions.

Fracture mechanics seeks to identify the conditions under which a defect will grow or propagate to failure and, if possible, the rate of crack or defect growth. The methods concentrate on three principal quantities: (1) the size of the largest or most critical flaw, usually denoted as a; (2) the applied stress, denoted by σ; and (3) the fracture toughness, a quantity that describes the resistance of a material to fracture or crack growth, which is usually denoted by K with subscripts to signify the conditions of testing. Equations have been developed that relate these three quantities (at the onset of crack growth or propagation) for various specimen geometries, flaw locations, and flaw orientations. If nondestructive testing or quality control methods have been applied, the size of the largest flaw that could go undetected is often known. By mathematically placing this worst possible flaw in the worst possible location and orientation, and coupling this with the largest applied stress for that location, a designer can determine the value of fracture toughness necessary to prevent that flaw from propagating during service. Specifying any two of the three parameters allows the computation of the third. If the material and stress conditions were defined, the size of the maximum permissible flaw could be computed. Inspection conditions could then be selected to ensure that flaws greater than this magnitude are cause for product rejection. Finally, if a component is found to have a significant flaw and the material is known, the maximum operating stress can be determined that will ensure no further growth of that flaw.

In the past, detection of a flaw or defect was usually cause for rejection of the part (detection = rejection). With enhanced methods and sensitivities of inspection, almost every product can now be shown to contain flaws. Fracture mechanics comes to the rescue. According to the philosophy of fracture mechanics, each of the flaws or defects in a material can be either *dormant* or *dynamic*. Dormant defects are those whose size remains unchanged through the lifetime of the part and are indeed permissible. A major goal of fracture mechanics, therefore, is to define the distinction between dormant and dynamic for the specific conditions of material, part geometry, and applied loading.[4] Alternative efforts to prevent material fracture generally involve overdesign, excessive inspection, or the use of premium-quality materials—all of which increase cost and possibly compromise performance.

Fracture mechanics can also be applied to fatigue, which has already been cited as causing as much as 90% of all dynamic failures. The standard method of fatigue testing applies cyclic loads to polished, flaw-free specimens, and the reported lifetime consists of both crack initiation and crack propagation. In contrast, fracture mechanics focuses on the growth of an already-existing flaw. Figure 2-38 shows the *crack growth rate* (change in size per loading cycle denoted as *da/dN*) plotted as a function of the fracture mechanics parameter, ΔK (where ΔK increases with an increase in either the flaw size and/or the magnitude of applied stress). Since the fracture mechanics approach begins with an existing flaw, it provides a far more realistic guarantee of minimum service life.

Fracture mechanics is a truly integrated blend of design (applied stresses), inspection (flaw-size determination), and materials (fracture toughness). The approach has proven valuable in many areas where fractures could be catastrophic.

---

[4] The basic equation of fracture mechanics assumes the form of $K \geq \alpha\, \sigma \sqrt{\pi a}$, where K is the *fracture toughness* of the material (a material property), σ is the maximum applied tensile stress, a is the size of the largest or most critical flaw, and α is a dimensionless factor that considers the flaw location and flaw shape. The left side of the equation considers the material and the right side describes the usage condition (a combination of flaw and loading). The relationship is usually described as a greater than or equal. When the material number is greater than the usage condition, the flaw is dormant. When equality is achieved, the flaw becomes dynamic, and crack growth or fracture occurs.

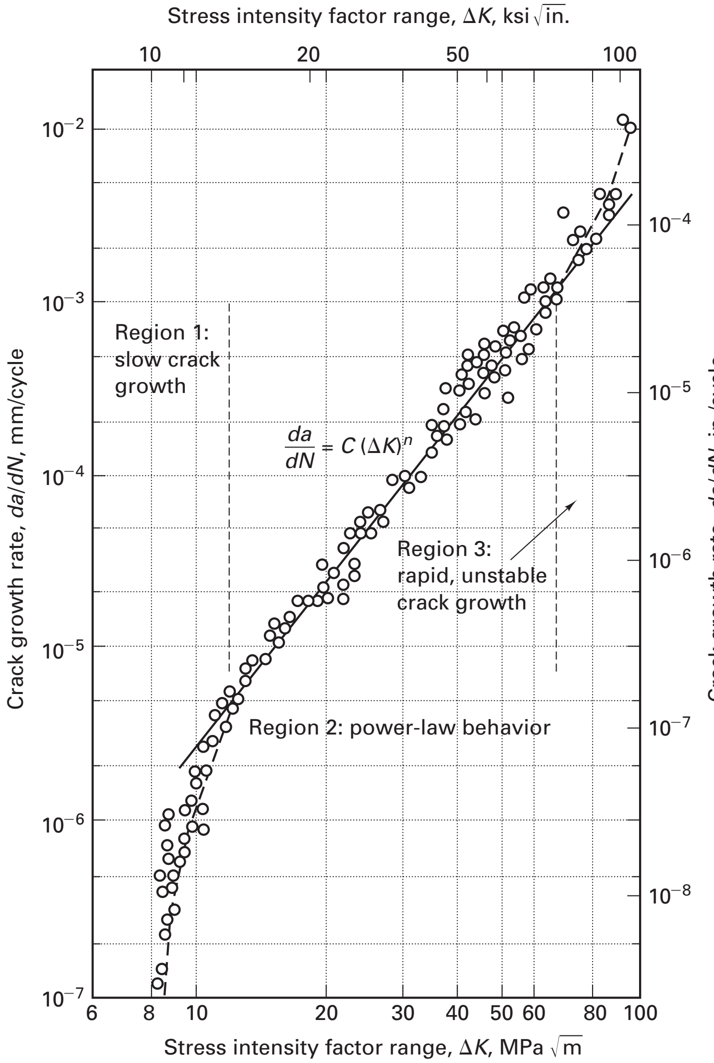

FIGURE 2-38 Plot of the fatigue crack growth rate vs. ΔK for a typical steel—the fracture mechanics approach. Similar-shaped curves are obtained for most engineering metals. *(Courtesy of ASM International.)*

2.7 PHYSICAL PROPERTIES

For certain applications, the *physical properties* of an engineering material may be even more important than the mechanical ones. These include the thermal, electrical, magnetic, and optical characteristics.

We have already seen several ways in which the mechanical properties of materials change with variations in temperature. In addition to these effects, there are some truly *thermal properties* that should be considered. The *heat capacity* or *specific heat* of a material is the amount of energy that must be added to or removed from a given mass of material to produce a 1° change in temperature. This property is extremely important in processes such as casting, where heat must be extracted rapidly to promote solidification, or heat treatment, where large quantities of material are heated and cooled. *Thermal conductivity* measures the rate at which heat can be transported through a material. While this may be tabulated separately in reference texts, it is helpful to remember that for metals, thermal conductivity is directly proportional to electrical conductivity. Metals such as copper, gold, and aluminum that possess good electrical conductivity are also good transporters of thermal energy. *Thermal expansion* is another important thermal property. Most materials expand upon heating and contract upon cooling, but the amount of expansion or contraction will vary with the material. For components that are machined at room temperature but put in service at elevated temperatures, or castings that solidify at elevated temperatures and then cool, the manufactured dimensions must be adjusted to compensate for the subsequent changes.

Electrical conductivity and *electrical resistivity* may also be important design considerations. These properties will vary not only with the material but also with the temperature and the way the material has been processed.

From the standpoint of *magnetic response*, materials are often classified as diamagnetic, paramagnetic, ferromagnetic, antiferromagnetic, and ferrimagnetic. These terms refer to the way in which the material responds to an applied magnetic field. Material properties, such as saturation strength, remanence, and magnetic hardness or softness, describe the strength, duration, and nature of this response.

Still other physical properties that may assume importance include *weight* or *density*, *melting* and *boiling points*, and the various *optical properties*, such as the ability to transmit, absorb, or reflect light or other electromagnetic radiation.

2.8 TESTING STANDARDS AND CONCERNS

When evaluating the mechanical and physical properties of materials, it is important that testing be conducted in a standardized and reproducible manner. ASTM International, formerly the American Society of Testing and Materials, maintains and updates many testing standards, and it is important to become familiar with their contents. For example, ASTM specification E370 describes the "Standard Test Methods and Definitions for Mechanical Testing of Steel Products." Tensile testing is described in specifications E8 and E83, impact testing in E23, creep in E139, and penetration hardness in E10. Other specifications describe fracture mechanics testing as well as the procedures to evaluate corrosion resistance, compressive strength, shear strength, torsional properties, and corrosion–fatigue.

In addition, it is important to note not only the material being tested but also the location from which the specimen was taken and its orientation. Rolled sheet, rolled plate, and rolled bars, for example, will have different properties when tested parallel to the direction of rolling (longitudinal) and perpendicular to the rolling direction (transverse). This variation of properties with direction, known as *anisotropy*, may be crucial to the success or failure of a product.

Key Words

ASTM
anisotropy
brale
breaking strength
Brinell hardness number
Brinell hardness test
brittle
Charpy test
compression
crack growth rate (da/dN)
creep
creep rate
damping
density
design defects
dormant flaw
ductile-to-brittle transition temperature
ductility
durometer
dynamic flaw
elastic limit
electrical conductivity
electrical resistivity
elongation
endurance limit
engineering strain
engineering stress
fatigue
fatigue strength
fatigue striations
formability
fracture toughness
gage length
hardness
heat capacity
Hooke's law
impact test
Izod test
Knoop hardness
machinability
manufacturing defects
material defects
mechanical properties
metal
microhardness
modulus of elasticity
modulus of resilience
necking
nonmetal
notch-sensitive
notch-insensitive
offset yield strength
percent elongation
percent reduction in area
performance
physical properties
plastic deformation
processing properties
proportional limit
resilience
Rockwell hardness test
S–N curve
scleroscope
shear
specific heat
static properties
stiffness
strain
strain hardening
strain–hardening exponent
strain rate
stress
stress–rupture diagram
structure
tensile strength
tensile impact test
tensile test
tension
thermal conductivity
thermal expansion
time to rupture (rupture time)
toughness
transition temperature
true strain
true stress
ultimate tensile strength
uniaxial tensile test
uniform elongation
Vickers hardness test
weldability
yield point
Young's modulus

Review Questions

1. A knowledge of what four aspects is critical to the successful application of a material in an engineering design?
2. What are some properties commonly associated with metallic materials?
3. What are some of the more common nonmetallic engineering materials?
4. What are some of the important physical properties of materials?
5. Why should caution be exercised when applying the results from any of the standard mechanical property tests?
6. What are the standard units used to report stress and strain in the English system? In the metric or SI system?
7. What are static properties?
8. What is the most common static test related to mechanical properties?
9. Why might Young's modulus or stiffness be an important material property?
10. What are some of the tensile test properties that are used to describe or define the elastic-to-plastic transition in a material?
11. Why is it important to specify the "offset" when providing yield strength data?
12. What are two tensile test properties that can be used to describe the ductility of a material?
13. Is a brittle material a weak material? What does "brittleness" mean?
14. What is the toughness of a material?
15. What is the difference between true stress and engineering stress? True strain and engineering strain?
16. What is strain hardening or work hardening? How might this phenomenon be measured or reported? How might it be used in manufacturing?
17. How might tensile test data be misleading for a "strain rate sensitive" material?
18. What are some of the different material characteristics or responses that have been associated with the term *hardness*?
19. What are the similarities and differences between the Brinell and Rockwell hardness tests?
20. Why are there different Rockwell hardness scales?
21. When might a microhardness test be preferred over the more standard Brinell or Rockwell tests?
22. Why might the various types of hardness tests fail to agree with one another?
23. What is the relationship between penetration hardness and the ultimate tensile strength for steel?
24. Describe several types of dynamic loading.
25. Why should the results of standardized dynamic tests be applied with considerable caution?
26. What are the two most common types of bending impact tests? How are the specimens supported and loaded in each?
27. What aspects or features can significantly alter impact data?
28. What is "notch-sensitivity" and how might it be important in the performance of a product?
29. What is the endurance limit? What occurs when stresses are above it? Below it?
30. Are the stresses applied during a fatigue test above or below the yield strength (as determined in a tensile test)?
31. What features may significantly alter the fatigue lifetime or fatigue behavior of a material?
32. What relationship can be used to estimate the endurance limit of a steel?
33. What material, design, or manufacturing features can contribute to the initiation of a fatigue crack?
34. What are fatigue striations and why do they form?
35. Why is it important for a designer or engineer to know a material's properties at all possible temperatures of operation?
36. Why should one use caution when using steel at low temperature?
37. How might we evaluate the long-term effect of elevated temperature on an engineering material?
38. What is a stress–rupture diagram, and how is one developed?
39. Why are terms such as *machinability, formability,* and *weldability* considered to be poorly defined and therefore quite nebulous?
40. What is the basic premise of the fracture mechanics approach to testing and design?
41. What three principal quantities does fracture mechanics attempt to relate?
42. What are the three most common thermal properties of a material, and what do they measure?
43. Describe an engineering application where the density of the selected material would be an important material consideration.
44. Why is it important that property testing be performed in a standardized and reproducible manner?
45. Why is it important to consider the orientation of a test specimen with respect to the overall piece of material?

Problems

1. Select a product or component for which physical properties are more important than mechanical properties.
    a. Describe the product or component and its function.
    b. What are the most important properties or characteristics?
    c. What are the secondary properties or characteristics that would also be desirable?
2. Repeat Problem 1 for a product or component whose dominant required properties are of a static mechanical nature.
3. Repeat Problem 1 for a product or component whose dominant requirements are dynamic mechanical properties.
4. One of the important considerations when selecting a material for an application is to determine the highest and lowest operating temperatures along with the companion properties that must be present at each extreme. The ductile-to-brittle transition temperature, discussed in Section 2.4, has been an important factor in a number of failures. An article that summarized the features of 56 catastrophic brittle fractures that made headline news between 1888 and 1956 noted that low temperatures were present in nearly every case. The water temperature at the time of the sinking of the *Titanic* was above

the freezing point for salt water but below the transition point for the steel used in construction of the hull of the ship.

a. Which of the common engineering materials exhibits a ductile-to-brittle transition?
b. For plain carbon and low-alloy steels, what is a typical value (or range of values) for the transition temperature?
c. What type of material would you recommend for construction of a small vessel to transport liquid nitrogen within a building or laboratory?
d. Figure 2-34 summarizes the results of impact testing performed on hull plate from the *Titanic* and similar material produced for modern steel-hulled ships. Why should there be a difference between specimens cut longitudinally (along the rolling direction) and transversely (across the rolling direction)? What advances in steel making have led to the significant improvement in low-temperature impact properties?

5. Several of the property tests described in this chapter produce results that are quite sensitive to the presence or absence of notches or other flaws. The fracture mechanics approach to materials testing incorporates flaws into the tests and evaluates their performance. The review article mentioned in Problem 4 cites the key role of a flaw or defect in nearly all of the headline-news fractures.
   a. What are some of the various "flaws or defects" that might be present in a product? Consider flaws that might be present in the starting material, flaws that might be introduced during manufacture, and flaws that might occur due to shipping, handling, use, maintenance, or repair.
   b. What particular properties might be most sensitive to flaws or defects?
   c. Discuss the relationship of flaws to the various types of loading (tension vs. compression, torsion, shear).
   d. Fracture mechanics considers both surface and interior flaws and assigns terms such as *crack initiator*, *crack propagator*, and *crack arrestor*. Briefly discuss why location and orientation may be as important as the physical size of a flaw.

www.wiley.com/college/degarmo

Chapter 2 CASE STUDY

Separation of Mixed Materials

Because of the amount of handling that occurs during material production, within warehouses, and during manufacturing operations, along with the handling of loading, unloading, and shipping, material mix-ups and mixed materials are not an uncommon occurrence. Mixed materials also occur when industrial scrap is collected or when discarded products are used as raw materials through recycling. Assume that you have equipment to perform each of the tests described in this chapter (as well as access to the full spectrum of household and department store items and even a small machine shop). For each of the following material combinations, determine a procedure that would permit separation of the mixed materials. Use standard data-source references to help identify distinguishable properties.

1. Steel and aluminum cans that have been submitted for recycling
2. Stainless steel sheets of Type 430 ferritic stainless and Type 316 austenitic stainless.
3. 6061-T6 aluminum and AZ91 magnesium that have become mixed in a batch of machine shop scrap.
4. Transparent bottles of polyethylene and polypropylene (both thermoplastic polymers) that have been collected for recycling.
5. Hot-rolled bars of AISI 1008 and 1040 steel.
6. Hot-rolled bars of AISI 1040 (plain-carbon) steel and 4140 steel (a molybdenum-containing alloy)

CHAPTER 3

NATURE OF METALS AND ALLOYS

3.1 STRUCTURE–PROPERTY–PROCESSING–PERFORMANCE RELATIONSHIPS

As discussed in Chapter 2, the success of many engineering activities depends on the selection of engineering materials whose properties match the requirements of the application. Primitive cultures were often limited to the naturally occurring materials in their environment. As civilization developed, the spectrum of engineering materials expanded. Materials could be processed and their properties altered and possibly enhanced. The alloying or heat treatment of metals and the firing of ceramics are examples of techniques that can substantially alter the properties of a material. Fewer compromises were required, and enhanced design possibilities emerged. Products, in turn, became more sophisticated. While the early successes in altering materials were largely the result of trial and error, we now recognize that the *properties* and *performance* of a material are a direct result of its *structure* and *processing*. If we want to change the properties, we will most likely have to induce changes in the material structure.

Since all materials are composed of the same basic components—particles that include *protons, neutrons*, and *electrons*—it is amazing that so many different materials exist with such widely varying properties. This variation can be explained, however, by the many possible combinations these units can assume in a macroscopic assembly. The subatomic particles combine in different arrangements to form the various elemental *atoms*, each having a nucleus of protons and neutrons surrounded by the proper number of electrons to maintain charge neutrality. The specific arrangement of the electrons surrounding the nucleus affects the electrical, magnetic, thermal, and optical properties as well as the way the atoms bond to one another. Atomic bonding then produces a higher level of structure, which may be in the form of a *molecule, crystal*, or *amorphous aggregate*. This structure, along with the imperfections that may be present, has a profound effect on the mechanical properties. The size, shape, and arrangement of multiple crystals, or the mixture of two or more different structures within a material, produces a higher level of structure, known as *microstructure*. Variations in microstructure further affect the material properties.

Because of the ability to control structures through processing and the ability to develop new structures through techniques such as composite materials, engineers now have at their disposal a wide variety of materials with an almost unlimited range of properties. The specific properties of these materials depend on all levels of structure, from subatomic to macroscopic (Figure 3-1). This chapter will attempt to develop an understanding of the basic structure of engineering materials and how changes in that structure affect their properties and performance.

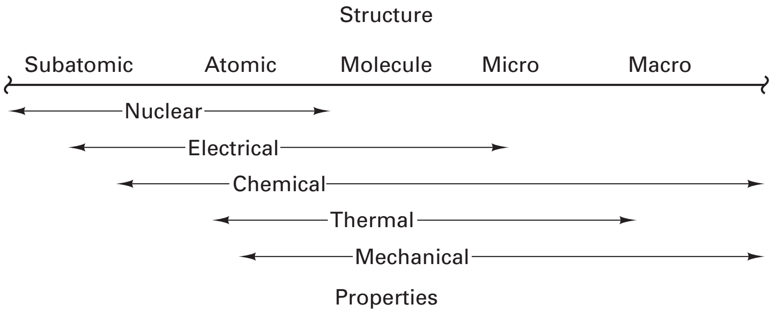

FIGURE 3-1 General relationship between structural level and the various types of engineering properties.

3.2 The Structure of Atoms

Experiments have revealed that atoms consist of a relatively dense nucleus composed of positively charged protons and neutral particles of nearly identical mass, known as neutrons. Surrounding the nucleus are the negatively charged electrons, which appear in numbers equal to the protons, so as to maintain a neutral charge balance. Distinct groupings of these basic particles produce the known elements, ranging from the relatively simple hydrogen atom to the unstable transuranium atoms over 250 times as heavy. Except for density and specific heat, however, the weight of atoms has very little influence on their engineering properties.

The light electrons that surround the nucleus play an extremely significant role in determining material properties. These electrons are arranged in a characteristic structure consisting of shells and subshells, each of which can contain only a limited number of electrons. The first shell, nearest the nucleus, can contain only two. The second shell can contain eight, and the third, 32. Each shell and subshell is most stable when it is completely filled. For atoms containing electrons in the third shell and beyond, however, relative stability is achieved with eight electrons in the outermost layer or subshell.

If an atom has slightly less than the number of outer-layer electrons required for stability, it will readily accept an electron from another source. It will then have one electron more than the number of protons and becomes a negatively charged atom, or *negative ion*. Depending on the number of additional electrons, ions can have negative charges of 1, 2, 3, or more. Conversely, if an atom has a slight excess of electrons beyond the number required for stability (such as sodium, with one electron in the third shell), it will readily give up the excess electron and become a *positive ion*. The remaining electrons become more strongly bound, so further removal of electrons becomes progressively more difficult.

The number of electrons surrounding the nucleus of a neutral atom is called the *atomic number*. More important, however, are those electrons in the outermost shell or subshell, which are known as *valence electrons*. These are influential in determining chemical properties, electrical conductivity, some mechanical properties, the nature of interatomic bonding, atom size, and optical characteristics. Elements with similar electron configurations in their outer shells tend to have similar properties.

3.3 Atomic Bonding

Atoms are rarely found as free and independent units; they are usually linked or bonded to other atoms in some manner as a result of interatomic attraction. The electron structure of the atoms plays the dominant role in determining the nature of the bond.

Three types of *primary bonds* are generally recognized, the simplest of which is the *ionic bond*. If more than one type of atom is present, the outermost electrons can break free from atoms with excesses in their valence shell, transforming them into positive ions. The electrons then transfer to atoms with deficiencies in their outer shell, converting them into negative ions. The positive and negative ions have an electrostatic attraction for each other, resulting in a strong bonding force. Figure 3-2 presents a crude schematic of the ionic bonding process for sodium and chlorine. Ionized atoms do not usually unite in

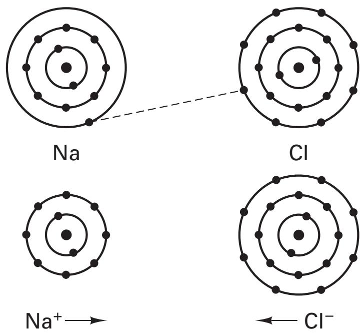

FIGURE 3-2 Ionization of sodium and chlorine, producing stable outer shells by electron transfer.

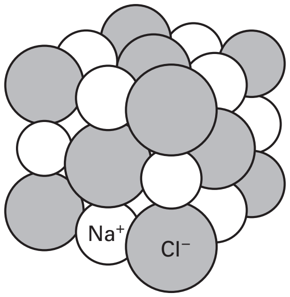

FIGURE 3-3 Three-dimensional structure of the sodium chloride crystal. Note how the various ions are surrounded by ions of the opposite charge.

simple pairs, however. All positively charged atoms attract all negatively charged atoms. Therefore, each sodium ion will attempt to surround itself with negative chlorine ions, and each chlorine ion will attempt to surround itself with positive sodium ions. Since the attraction is equal in all directions, the result will be a three-dimensional structure, like the one shown in Figure 3-3. Since charge neutrality must be maintained within the structure, equal numbers of positive and negative charges must be present in each neighborhood. General characteristics of materials joined by ionic bonds include moderate to high strength, high hardness, brittleness, high melting point, and low electrical conductivity (since electrons are captive to atoms, charge transport requires atom—or ion—movement).

A second type of primary bond is the *covalent* type. Here the atoms in the assembly find it impossible to produce completed shells by electron transfer but achieve the same goal through electron sharing. Adjacent atoms share outer-shell electrons so that each achieves a stable electron configuration. The shared (negatively charged) electrons locate between the positive nuclei, forming a positive–negative–positive bonding link. Figure 3-4 illustrates this type of bond for a pair of chlorine atoms, each of which contains seven electrons in the valence shell. The result is a stable two-atom molecule, Cl_2. Stable molecules can also form from the sharing of more than one electron from each atom, as in the case of nitrogen (Figure 3-5a). The atoms in the assembly need not be identical (as in HF, Figure 3-5b), the sharing does not have to be equal, and a single atom can share electrons with more than one other atom. For atoms such as carbon and silicon, with four electrons in the valence shell, one atom may share its valence electrons with each of four neighboring atoms. The resulting structure is a three-dimensional network of bonded atoms, like the one shown in Figure 3-5c. Like the ionic bond, the covalent bond tends to produce materials with high strength and high melting point. Since atom movement within the three-dimensional structure (plastic deformation) requires the breaking of discrete bonds, covalent materials are characteristically brittle. Electrical conductivity depends on bond strength, ranging from conductive tin (weak covalent bonding), through semiconductive silicon and germanium, to insulating diamond (carbon). Ionic or covalent bonds are commonly found in ceramic and polymeric materials.

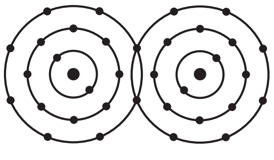

FIGURE 3-4 Formation of a chlorine molecule by the electron sharing of a covalent bond.

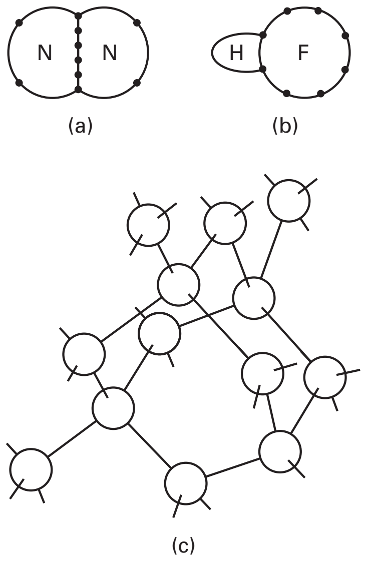

(a) (b)

(c)

FIGURE 3-5 Examples of covalent bonding in (a) nitrogen molecule, (b) HF, and (c) diamond.

A third type of primary bond is possible when a complete outer shell cannot be formed by either electron transfer or electron sharing. This bond is known as the *metallic bond* (Figure 3-6). If each of the atoms in an aggregate contains only a few valence electrons (one, two, or three), these electrons can be easily removed to produce “stable” ions. The positive ions (nucleus and inner, nonvalence electrons) then arrange in a three-dimensional periodic array and are surrounded by wandering, universally shared valence electrons, sometimes referred to as an electron cloud or electron gas. These highly mobile, free electrons account for the high electrical and thermal conductivity values as well as the opaque (nontransparent) characteristic observed in metals (the free electrons are able to absorb the various discrete energies of light radiation). They also provide the “cement” required for the positive–negative–positive attractions that result in bonding. Bond strength, and therefore material strength and melting temperature, varies over a wide range. More significant, however, is the observation that the positive ions can now move within the structure without the breaking of discrete bonds. Materials bonded by metallic bonds can be deformed by atom-movement mechanisms and produce an altered shape that is every bit as strong as the original. This phenomenon is the basis of metal plasticity, enabling the wide variety of forming processes used in the fabrication of metal products.

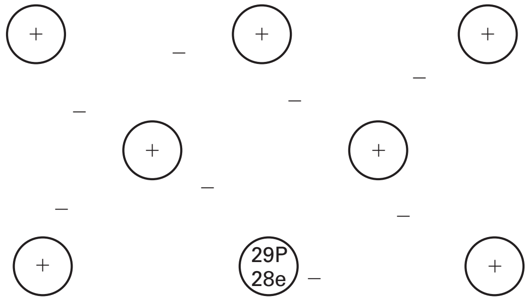

FIGURE 3-6 Schematic of the metallic bond showing the positive ions and free electrons for copper. Each positive-charged ion contains a nucleus with 29 protons and stable electron shells and subshells containing the remaining 28 electrons.

3.4 SECONDARY BONDS

Weak or secondary bonds, known as *van der Waals forces*, can form between molecules that possess a nonsymmetrical distribution of electrical charge. Some molecules, such as hydrogen fluoride and water,[1] can be viewed as electric dipoles. Certain portions of the molecule tend to be more positive or negative than others (an effect referred to as *polarization*). The negative part of one molecule tends to attract the positive region of another, forming a weak bond. Van der Waals forces contribute to the mechanical properties of a number of molecular polymers, such as polyethylene and polyvinyl chloride (PVC).

3.5 ATOM ARRANGEMENTS IN MATERIALS

As atoms bond together to form aggregates, we find that the particular arrangement of the atoms has a significant effect on the material properties. Depending on the manner of atomic grouping, materials are classified as having *molecular structures, crystal structures*, or *amorphous structures*.

Molecular structures have a distinct number of atoms that are held together by primary bonds. There is only a weak attraction, however, between a given molecule and other similar groupings. Typical examples of molecules include O_2, H_2O, and C_2H_4 (ethylene). Each molecule is free to act more or less independently, so these materials exhibit relatively low melting and boiling points. Molecular materials tend to be weak, since the molecules can move easily with respect to one another. Upon changes of state from solid to liquid or liquid to gas, the molecules remain as distinct entities.

Solid metals and most minerals have a crystalline structure. Here the atoms are arranged in a three-dimensional geometric array known as a *lattice*. Lattices are describable through a unit building block, or *unit cell*, that is essentially repeated throughout space. Crystalline structures will be discussed more fully in Section 3.6.

In an amorphous structure, such as glass, the atoms have a certain degree of local order (arrangement with respect to neighboring atoms), but when viewed as an aggregate, they lack the periodically ordered arrangement that is characteristic of a crystalline solid.

3.6 CRYSTAL STRUCTURES OF METALS

From a manufacturing viewpoint, metals are an extremely important class of materials. They are frequently the materials being processed and often form both the tool and the machinery performing the processing. More than 50 of the known chemical elements are classified as metals, and about 40 have commercial importance. They are characterized by the metallic bond and possess the distinguishing characteristics of strength, good electrical and thermal conductivity, luster, the ability to be plastically deformed to a fair degree without fracturing, and a relatively high specific gravity (density) compared to

---

[1] The H_2O molecule can be viewed as a 109° boomerang or elbow with oxygen in the middle and the two hydrogens on the extending arms. The eight valence electrons (six from oxygen and two from hydrogen) associate with oxygen, giving it a negative charge. The hydrogen arms are positive. Therefore, when two or more water molecules are present, the positive hydrogen locations of one molecule are attracted to the oxygen location of adjacent molecules.

nonmetals. The fact that some metals possess properties different from the general pattern simply expands their engineering utility.

When metals solidify, the atoms assume a crystalline structure; that is, they arrange themselves in a geometric lattice. Many metals exist in only one lattice form. Some, however, can exist in the solid state in two or more lattice forms, with the particular form depending on the conditions of temperature and pressure. These metals are said to be *allotropic* or *polymorphic* (poly means "more than one"; morph means "structure"), and the change from one lattice form to another is called an *allotropic transformation*. The most notable example of such a metal is iron, where the allotropic change makes possible heat-treating procedures that yield a wide range of final properties. It is largely because of its allotropy that iron has become the basis of our most important alloys.

TABLE 3-1 Types of Lattices for Common Metals at Room Temperature

Metal	Lattice Type
Aluminum	Face-centered cubic
Copper	Face-centered cubic
Gold	Face-centered cubic
Iron	Body-centered cubic
Lead	Face-centered cubic
Magnesium	Hexagonal
Silver	Face-centered cubic
Tin	Body-centered tetragonal
Titanium	Hexagonal

There are 14 basic types of crystal structures or lattices. Fortunately, however, nearly all of the commercially important metals solidify into one of three lattice types: body-centered cubic, face-centered cubic, or hexagonal close-packed. Table 3-1 lists the room-temperature structure for a number of common metals. Figure 3-7 compares the structures to one another as well as to the easily visualized, but rarely observed, simple cubic structure.

To begin our study of crystals, consider the *simple cubic* structure illustrated in Figure 3-7a. This crystal can be constructed by placing single atoms on all corners of a cube and then linking identical cube units together. Assuming that the atoms are rigid spheres with atomic radii touching one another, computation reveals that only 52% of available space is occupied. Each atom is in direct contact with only six neighbors (plus and minus directions along the x, y, and z axes). Both of these observations are unfavorable to the metallic bond, where atoms desire the greatest number of nearest neighbors and high-efficiency packing.

	Lattice structure	Unit cell schematic	Ping-Pong ball model	Number of nearest neighbors	Packing efficiency	Typical metals
a	Simple cubic	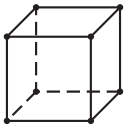		6	52%	None
b	Body-centered cubic	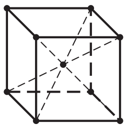		8	68%	Fe, Cr, Mn, Cb, W, Ta, Ti, V, Na, K
c	Face-centered cubic	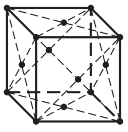		12	74%	Fe, Al, Cu, Ni, Ca, Au, Ag, Pb, Pt
d	Hexagonal close-packed	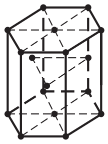		12	74%	Be, Cd, Mg, Zn, Zr

FIGURE 3-7 Comparison of crystal structures: simple cubic, body-centered cubic, face-centered cubic, and hexagonal close-packed.

The largest region of unoccupied space is in the geometric center of the cube, where a sphere of 0.732 times the atom diameter could be inserted.[2] If the cube is expanded to permit the insertion of an entire atom, the *body-centered-cubic (BCC)* structure results (Figure 3-7b). Each atom now has eight nearest neighbors, and 68% of the space is occupied. This structure is more favorable to metals and is observed in room-temperature iron, chromium, manganese, and the other metals listed in Figure 3-7b. Compared to materials with other structures, body-centered-cubic metals tend to be high strength.

In seeking efficient packing and a large number of adjacent neighbors, consider maximizing the number of spheres in a single layer and then stacking those layers. The layer of maximized packing is known as a *close-packed plane* and exhibits the hexagonal symmetry shown in Figure 3-8. The next layer is positioned with spheres occupying either the "point-up" or "point-down" recesses in the original layer. Depending on the sequence in which the various layers are stacked, two distinctly different structures can be produced. Both have twelve nearest neighbors (six within the original plane and three from each of the layers above and below) and a 74% efficiency of occupying space.

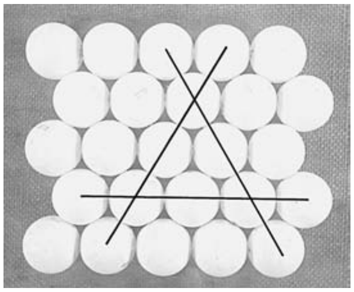

FIGURE 3-8 Close-packed atomic plane showing three directions of atom touching or close packing.

If the layers are stacked in sets of three (original location, point-up recess of the original layer, and point-down recess of the original layer), the resulting structure can also be viewed as an expanded cube with an atom inserted in the center of each of the six cube faces. This is the *face-centered-cubic (FCC)* structure shown in Figure 3-7c. It is the preferred structure for many of the engineering metals and tends to provide the exceptionally high ductility (ability to be plastically deformed without fracture) that is characteristic of aluminum, copper, silver, gold, and elevated-temperature iron.

A stacking sequence of any two alternating layers results in a structure known as *hexagonal close-packed (HCP)*, where the individual close-packed planes can be clearly identified (Figure 3-7d). Metals having this structure, such as magnesium and zinc, tend to have poor ductility, fail in a brittle manner, and often require special processing procedures.

3.7 DEVELOPMENT OF A GRAIN STRUCTURE

When a metal solidifies, a small particle of solid forms from the liquid with a lattice structure characteristic of the given material. This particle then acts like a seed or nucleus and grows as other atoms attach themselves. The basic crystalline unit, or unit cell, is repeated, as illustrated in the examples of Figure 3-9.

In actual solidification, many nuclei form independently throughout the liquid and have random orientations with respect to one another. Each then grows until it begins to interfere with its neighbors. Since the adjacent lattice structures have different alignments or orientations, growth cannot produce a single continuous structure, and a polycrystalline solid is produced. Figure 3-10 provides a two-dimensional illustration of this phenomenon. The small, continuous volumes of solid are known as crystals or *grains*, and the surfaces that divide them (i.e., the surfaces of crystalline discontinuity) are known as *grain boundaries*. The process of solidification is one of crystal *nucleation and growth*.

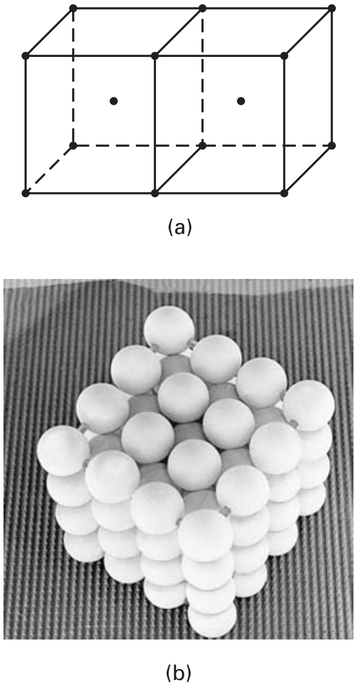

(a)

(b)

FIGURE 3-9 Growth of crystals to produce an extended lattice: (a) line schematic; (b) Ping-Pong ball model.

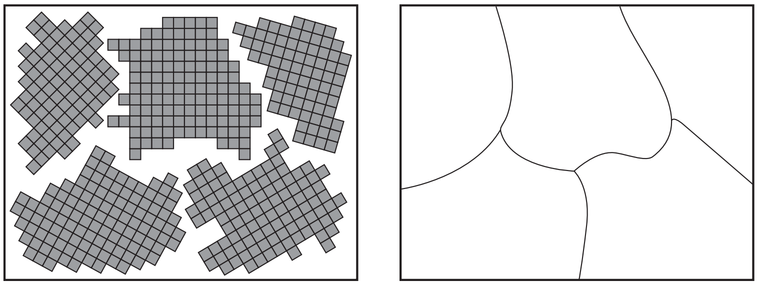

FIGURE 3-10 Schematic representation of the growth of crystals to produce a polycrystalline material.

---

[2] The diagonal of a cube is equal to $\sqrt{3}$ times the length of the cube edge, and the cube edge is here equal to two atomic radii or one atomic diameter. Thus the diagonal is equal to 1.732 times the atom diameter and is made up of an atomic radius, open space, and another atomic radius. Since two radii equal one diameter, the open space must be equal in size to 0.732 times the atomic diameter.

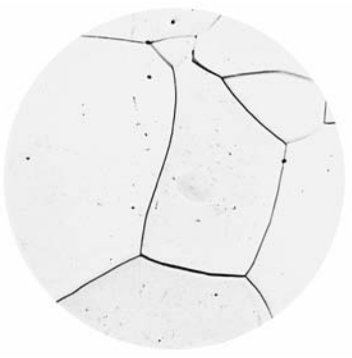

FIGURE 3-11 Photomicrograph of alpha ferrite (essentially pure iron) showing grains and grain boundaries; *(Courtesy of United States Steel Corp., Pittsburgh, PA.)*

Grains are the smallest unit of structure in a metal that can be observed with an ordinary light microscope. If a piece of metal is polished to mirror finish with a series of abrasives and then exposed to an attacking chemical for a short time (etched), the grain structure can be revealed. The atoms along the grain boundaries are more loosely bonded and tend to react with the chemical more readily than those that are part of the grain interior. When viewed under reflected light, the attacked boundaries scatter light and appear dark compared to the relatively unaffected (still flat) grains (Figure 3-11). In some cases, the individual grains may be large enough to be seen by the unaided eye, as with some galvanized steels, but usually magnification is required.

The number and size of the grains in a metal vary with the rate of nucleation and the rate of growth. The greater the nucleation rate, the smaller the resulting grains. Conversely, the greater the rate of growth, the larger the grains. Because the resulting *grain structure* will influence certain mechanical and physical properties, it is an important property for an engineer to control and specify. One means of specification is through the *ASTM grain size number*, defined in ASTM specification E112 as

$$N = 2^{n-1}$$

where N is the number of grains per square inch visible in a prepared specimen at 100X magnification, and n is the ASTM grain size number. Low ASTM numbers mean a few massive grains, while high numbers refer to materials with many small grains.

3.8 ELASTIC DEFORMATION

The mechanical properties of a material are highly dependent on its crystal structure. An understanding of mechanical behavior, therefore, begins with an understanding of the way crystals react to mechanical loads. Most studies begin with carefully prepared single crystals. Through them, we learn that the mechanical behavior is dependent on (1) the type of lattice, (2) the interatomic forces (i.e., bond strength), (3) the spacing between adjacent planes of atoms, and (4) the density of the atoms on the various planes.

If the applied loads are relatively low, the crystals respond by simply stretching or compressing the distance between atoms (Figure 3-12). The basic lattice unit does not change, and all of the atoms remain in their original positions relative to one another. The applied load serves only to alter the force balance of the atomic bonds, and the atoms assume new equilibrium positions with the applied load as an additional component of force. If the load is removed, the atoms return to their original positions and the crystal resumes its original size and shape. The mechanical response is *elastic* in nature, and the amount of stretch or compression is directly proportional to the applied load or stress.

Elongation or compression in the direction of loading results in an opposite change of dimensions at right angles to that direction. The ratio of lateral contraction to axial tensile strain is known as *Poisson's ratio*. This value is always less than 0.5 and is usually about 0.3.

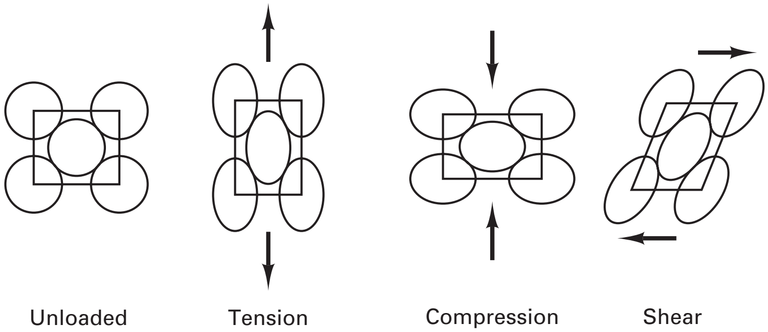

FIGURE 3-12 Distortion of a crystal lattice in response to various elastic loadings.

3.9 PLASTIC DEFORMATION

As the magnitude of applied load becomes greater, distortion (or elastic strain) continues to increase, and a point is reached where the atoms either (1) break bonds to produce a fracture or (2) slide over one another in a way that would reduce the load. For metallic materials, the second phenomenon generally requires lower loads and occurs preferentially. The atomic planes shear over one another to produce a net displacement or permanent shift of atom positions, known as *plastic deformation*. Conceptually, this is similar to the distortion of a deck of playing cards when one card slides over another. The actual mechanism, however, is really a progressive one rather than one in which all of the atoms in a plane shift simultaneously. More significantly, however, the result is a permanent change in shape that occurs without a concurrent deterioration in properties.

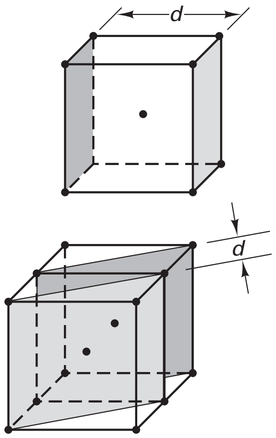

FIGURE 3-13 Schematic diagram showing crystalline planes with different atomic densities and interplanar spacings.

Recalling that a crystal structure is a regular and periodic arrangement of atoms in space, we see that it becomes possible to link the atoms into flat planes in an almost infinite number of ways. Planes having different orientations with respect to the surfaces of the unit cell will have different atomic densities and different spacing between adjacent, parallel planes, as shown in Figure 3-13. Given the choice of all possibilities, plastic deformation tends to occur along planes having the highest atomic density and greatest separation. The rationale for this can be seen in the simplified two-dimensional array of Figure 3-14. Planes A and A′ have higher density and greater separation than planes B and B′. In visualizing relative motion, we see that the atoms of B and B′ would interfere significantly with one another, whereas planes A and A′ do not experience this difficulty.

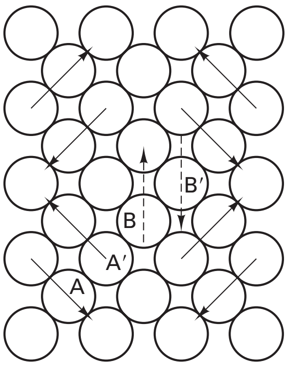

FIGURE 3-14 Simple schematic illustrating the lower deformation resistance of planes with higher atomic density and larger interplanar spacing.

Although Figure 3-14 represents the planes of sliding as lines, crystal structures are actually three-dimensional. Within the preferred planes are also preferred directions. If sliding occurs in a direction that corresponds to one of the close-packed directions (shown as dark lines in Figure 3-8), atoms can simply follow one another rather than each having to negotiate its own path. Plastic deformation, therefore, tends to occur by the preferential sliding of maximum-density planes (close-packed planes if present) in directions of closest packing. The specific combination of plane and direction is called a *slip system*, and the resulting shear deformation or sliding is known as *slip*.

The ability to deform a given metal depends on the ease of shearing one atomic plane over an adjacent one and the orientation of the plane with respect to the applied load. Consider, for example, the deck of playing cards. The deck will not "deform" when laid flat on the table and pressed from the top or when stacked on edge and pressed uniformly. The cards will slide over one another, however, if the deck is skewed with respect to the applied load so as to induce a shear stress along the plane of sliding.

With this understanding, consider the deformation properties of the three most common crystal structures:

1. *Body-centered cubic.* In the BCC structure, there are no close-packed planes. Slip occurs on the most favorable alternatives, which are those planes with the greatest interplanar spacing (six of which are illustrated in Figure 3-15). Within these planes, slip occurs along the directions of closest packing, which are the cube diagonals. If each specific combination of plane and direction is considered as a separate slip system, we find that the BCC materials contain 48 attractive ways to slip (plastically deform). The probability that one or more of these systems will be oriented in a favorable manner is great, but the force required to produce deformation is extremely large since there are no

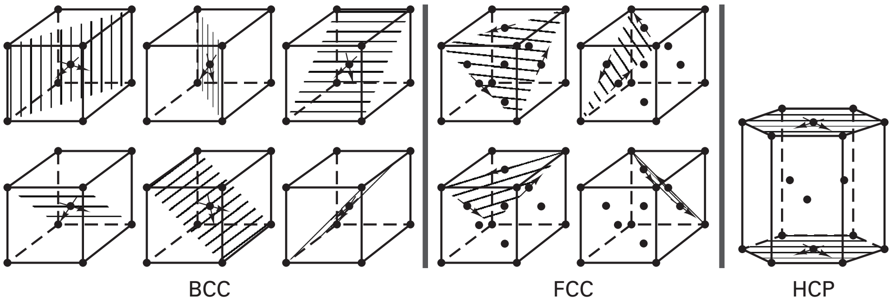

FIGURE 3-15 Slip planes within the BCC, FCC, and HCP crystal structures.

close-packed planes. Materials with this structure generally possess high strength with moderate ductility. (Refer to the typical BCC metals in Figure 3-7.)

2. *Face-centered cubic.* In the FCC structure, each unit cell contains four close-packed planes, as illustrated in Figure 3-15. Each of those planes contains three close-packed directions, or face diagonals, giving 12 possible means of slip. Again, the probability that one or more of these will be favorably oriented is great, and this time, the force required to induce slip is quite low. Metals with the FCC structure are relatively weak and possess excellent ductility, as can be confirmed by a check of the metals listed in Figure 3-7.

3. *Hexagonal close-packed.* The hexagonal lattice also contains close-packed planes, but only one such plane exists within the lattice. Although this plane contains three close-packed directions and the force required to produce slip is again rather low, the probability of favorable orientation to the applied load is small (especially if one considers a polycrystalline aggregate). As a result, metals with the HCP structure tend to have low ductility and are often classified as brittle.

3.10 DISLOCATION THEORY OF SLIPPAGE

A theoretical calculation of the strength of metals based on the sliding of entire atomic planes over one another predicts yield strengths on the order of 3 million pounds per square inch, or 20,000 MPa. The observed strengths in actual testing are typically 100 to 150 times less than this value. Extremely small laboratory-grown crystals, however, have been shown to exhibit the full theoretical strength.

An explanation can be provided by the fact that plastic deformation does not occur by all of the atoms in one plane slipping simultaneously over all the atoms of an adjacent plane. Instead, deformation is the result of the progressive slippage of a localized disruption known as a *dislocation*. Consider a simple analogy. A carpet has been rolled onto a floor, and we now want to move it a short distance in a given direction. One approach would be to pull on one end and try to "shear the carpet across the floor," simultaneously overcoming the frictional resistance of the entire area of contact. This would require a large force acting over a small distance. An alternative approach might be to form a wrinkle at one end of the carpet and walk the wrinkle across the floor to produce a net shift in the carpet as a whole—a low-force-over-large-distance approach to the same task. In the region of the wrinkle, there is an excess of carpet with respect to the floor beneath it, and the movement of this excess is relatively easy.

Electron microscopes have revealed that metal crystals do not have all of their atoms in perfect arrangement but rather contain a variety of localized imperfections. Two such imperfections are the *edge dislocation* and *screw dislocation* (Figure 3-16). Edge dislocations are the edges of extra half-planes of atoms. Screw dislocations correspond to partial tearing of the crystal plane. In each case the dislocation is a disruption to the regular, periodic arrangement of atoms and can be moved about with a rather low applied force. It is the motion of these atomic-scale dislocations under applied load that is responsible for the observed macroscopic plastic deformation.

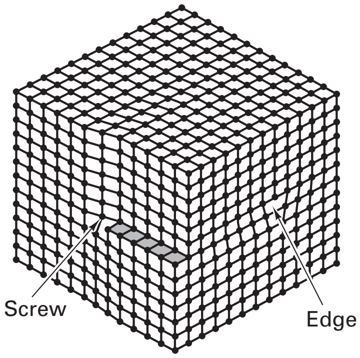

FIGURE 3-16 Schematic representation of screw and edge dislocations.

All engineering metals contain dislocations, usually in abundant quantities. The ease of deformation depends on the ease of inducing dislocation movement. Barriers to dislocation motion tend to increase the overall strength of a metal. These barriers take the form of other crystal imperfections and may be of the point type (missing atoms or *vacancies*, extra atoms or *interstitials*, or *substitution atoms* of a different variety, as may occur in an alloy), line type (another *dislocation*), or surface type (*crystal grain boundary* or *free surface*). To increase the strength of a material, we can either remove all defects to create a perfect crystal (extremely difficult) or work to impede the movement of existing dislocations by adding other crystalline defects.

3.11 STRAIN HARDENING OR WORK HARDENING

As noted in our discussion of the tensile test in Chapter 2, most metals become stronger when they are plastically deformed, a phenomenon known as *strain hardening* or *work hardening*. Understanding of this phenomenon can now come from our knowledge of dislocations and a further extension of the carpet analogy. Suppose that this time our goal is to move the carpet diagonally. The best way would be to move a wrinkle in one direction, and then move a second one perpendicular to the first. But suppose that both wrinkles were started simultaneously. We would find that wrinkle 1 would impede the motion of wrinkle 2, and vice versa. In essence, the feature that makes deformation easy can also serve to impede the motion of other, similar dislocations.

In metals, plastic deformation occurs through dislocation movement. As dislocations move, they are more likely to encounter and interact with other dislocations or crystalline defects, thereby producing resistance to further motion. In addition, mechanisms exist that markedly increase the number of dislocations in a metal during deformation (usually by several orders of magnitude), thereby enhancing the probability of interaction.

The effects of strain hardening become attractive when one considers that mechanical working (metalforming) is frequently used in the production of metal products. Since strength can be increased substantially during deformation, a strain-hardened (deformed), inexpensive metal can often be substituted for a more costly, stronger one that is machined to shape. As the product shape is being formed, the material is simultaneously becoming stronger.

Experimental evidence has confirmed the dislocation and slippage theory of deformation. A transmission electron microscope can reveal images of the individual dislocations in a thin metal section, and studies confirm both the increase in number and the interaction during deformation. Macroscopic observations also lend support. When a load is applied to a single metal crystal, deformation begins on the slip system that is most favorably oriented. The net result is often an observable slip and rotation, like that of a skewed deck of cards (Figure 3-17). Dislocation motion becomes more difficult as strain hardening produces increased resistance and rotation makes the slip system orientation less favorable. Further deformation may then occur on alternative systems that now offer less resistance, a phenomenon known as *cross slip*.

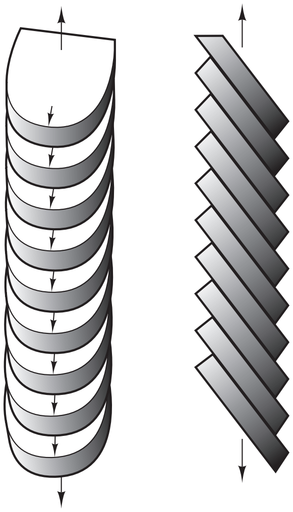

FIGURE 3-17 Schematic representation of slip and crystal rotation resulting from deformation.

3.12 PLASTIC DEFORMATION IN POLYCRYSTALLINE METALS

Commercial metals are not single crystals but usually take the form of polycrystalline aggregates. Within each crystal, deformation proceeds in the manner previously described. Since the various grains have different orientations, an applied load will produce different deformations within each of the crystals. This can be seen in Figure 3-18, where a metal has been polished and then deformed. The relief of the polished surface reveals the different slip planes for each of the grains.

One should note that the slip lines do not cross from one grain to another. The grain boundaries act as barriers to the dislocation motion (i.e., the defect is confined to the crystal in which it occurs). As a result, metals with a finer grain structure—more grains per unit area—tend to exhibit greater strength and hardness, coupled with increased impact resistance. This near-universal enhancement of properties is an attractive motivation for grain size control during processing.

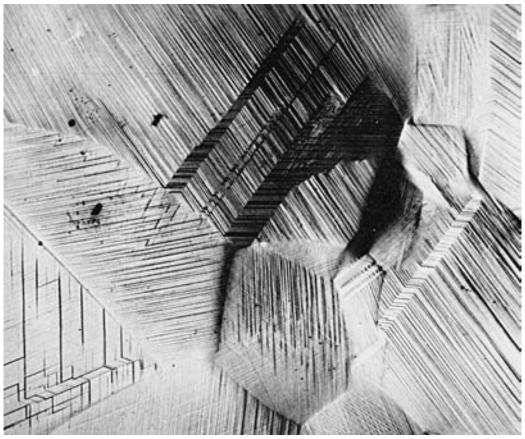

FIGURE 3-18 Slip lines in a polycrystalline material. *(From Richard Hertzberg,* Deformation and Fracture Mechanics of Engineering Materials; *courtesy of John Wiley & Sons, Inc.)*

3.13 GRAIN SHAPE AND ANISOTROPIC PROPERTIES

When a metal is deformed, the grains tend to elongate in the direction of metal flow (Figure 3-19). Accompanying the nonsymmetric structure are nonsymmetric or directionally varying properties. Mechanical properties (such as strength and ductility), as well as physical properties (such as electrical and magnetic characteristics), may all exhibit directional differences. Properties that vary with direction are said to be *anisotropic*. Properties that are uniform in all directions are *isotropic*.

The directional variation of properties can be harmful or beneficial, and therefore such variation assumes importance to both the part designer and the part manufacturer. If the metal flow is controlled in processes such as forging, enhanced strength or fracture resistance can be imparted to certain locations. Caution should be exercised, however, since an improvement in one direction is generally accompanied by a decline in another. Moreover, directional variation in properties may create problems during further processing operations, such as the further forming of rolled metal sheets.

FIGURE 3-19 Deformed grains in a cold-worked 1008 steel after 50% reduction by rolling. *(From* Metals Handbook*, 8th ed. ASM International, Materials Park, OH, 1972.)*

3.14 FRACTURE OF METALS

If too much plastic deformation is attempted, the metal may respond by fracture. When plastic deformation precedes the break, the fracture is known as a *ductile fracture*. Fractures can also occur before the onset of plastic deformation. These sudden, catastrophic failures, known as *brittle fractures*, are more common in metals having the BCC or HCP crystal structures. Whether the fracture is ductile or brittle, however, often depends on the specific conditions of material, temperature, state of stress, and rate of loading.

3.15 COLD WORKING, RECRYSTALLIZATION, AND HOT WORKING

During plastic deformation, a portion of the deformation energy is stored within the material in the form of additional dislocations and increased grain boundary surface area.[3] If a deformed polycrystalline metal is subsequently heated to a high enough temperature, the material will seek to lower its energy. New crystals nucleate and grow to consume and replace the original structure (Figure 3-20). This process of reducing the internal energy through the formation of new crystals is known as *recrystallization*. The temperature at which recrystallization occurs is different for each metal and also varies with the amount of prior deformation. The greater the amount of prior deformation,

---

[3] A sphere has the least amount of surface area of any shape to contain a given volume of material. When the shape becomes altered from that of a sphere, the surface area must increase. Consider a round balloon filled with air. If the balloon is stretched or flattened into another shape, the rubber balloon is stretched further. When the applied load is removed, the balloon snaps back to its original shape, the one involving the least surface energy. Metals behave in an analogous manner. During deformation, the distortion of the crystals increases the energy of the material. Given the opportunity, the material will try to lower its energy by returning to spherical grains.

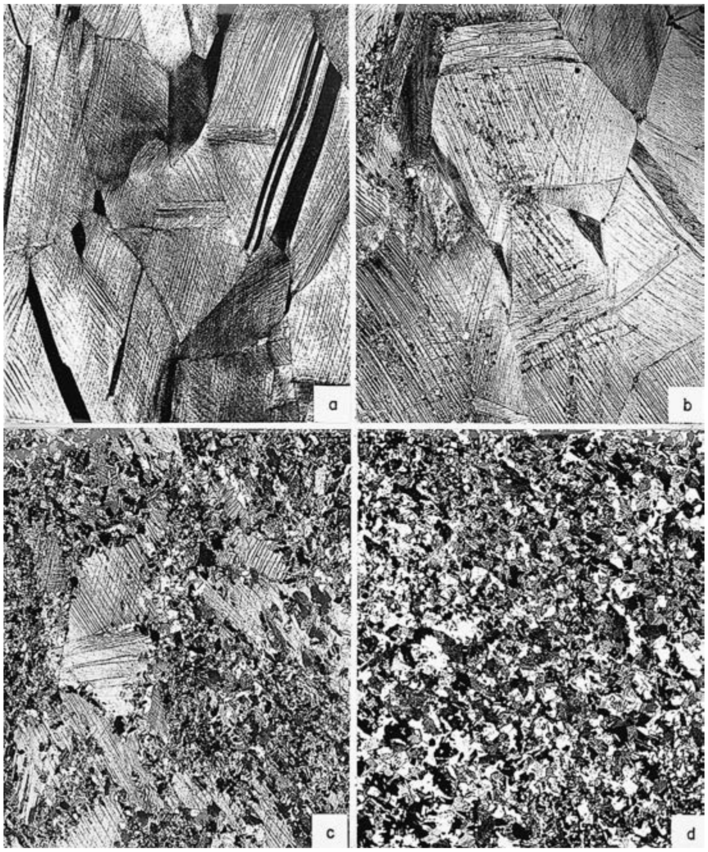

FIGURE 3-20 Recrystallization of 70–30 cartridge brass: (a) cold-worked 33%; (b) heated at 580°C (1075°F) for three seconds, (c) four seconds, and (d) eight seconds; 45X. *(Courtesy of J.E. Burke, General Electric Company, Fairfield, CT.)*

the more stored energy and the lower the recrystallization temperature. There is a lower limit, however, below which recrystallization will not take place in a reasonable amount of time. Table 3-2 gives the lowest practical recrystallization temperatures for several materials. This temperature can often be estimated by taking 0.4 times the melting point of the metal when the melting point is expressed as an absolute temperature (Kelvin or Rankine). This is also the temperature at which atomic diffusion (atom movement within the solid) becomes significant, indicating that diffusion is an important mechanism in recrystallization.

When metals are plastically deformed at temperatures below their recrystallization temperature, the process is called *cold working*. The metal strengthens by strain hardening, and the resultant structure consists of distorted grains. As deformation continues, the metal decreases in ductility and may ultimately fracture. It is a common practice, therefore, to recrystallize the material after a certain amount of cold work. Through this *recrystallization anneal*, the structure is replaced by one of new crystals that have never experienced deformation. All strain hardening is lost, but ductility is restored, and the material is now capable of further deformation without the danger of fracture.

If the temperature of deformation is sufficiently above the recrystallization temperature, the deformation process becomes *hot working*. Recrystallization begins as soon as sufficient driving energy is created, (i.e., deformation and recrystallization take place simultaneously), and extremely large deformations are now possible. Since a recrystallized grain structure is constantly forming, the final product will not exhibit strain hardening.

Recrystallization can also be used to control or improve the grain structure of a material. A coarse grain structure can be converted to a more attractive fine grain structure through recrystallization. The material must first be plastically deformed to store sufficient energy to provide the driving force. Subsequent control of the recrystallization process then establishes the final grain size.

TABLE 3-2 The Lowest Recrystallization Temperature of Common Metals

Metal	Temperature [°F(°C)]
Aluminum	300 (150)
Copper	390 (200)
Gold	390 (200)
Iron	840 (450)
Lead	Below room temperature
Magnesium	300 (150)
Nickel	1100 (590)
Silver	390 (200)
Tin	Below room temperature
Zinc	Room temperature

3.16 GRAIN GROWTH

Recrystallization is a continuous process in which a material seeks to lower its overall energy. Ideally, recrystallization will result in a structure of uniform crystals with a comparatively small grain size. If a metal is held at or above its recrystallization temperature for any appreciable time, however, the grains in the recrystallized structure will continue to increase in size. In effect, some of the grains become larger at the expense of their smaller neighbors as the material seeks to further lower its energy by decreasing the amount of grain boundary surface area. Since engineering properties tend to diminish as the size of the grains increase, control of recrystallization is of prime importance. A deformed material should be held at elevated temperature just long enough to complete the recrystallization process. The temperature should then be decreased to stop the process and avoid the property changes that accompany *grain growth*.

3.17 ALLOYS AND ALLOY TYPES

Our discussion thus far has been directed toward the nature and behavior of pure metals. For most manufacturing applications, however, metals are not used in their pure form. Instead, engineering metals tend to be *alloys*, materials composed of two or more different elements, and they tend to exhibit their own characteristic properties.

There are three ways in which a metal might respond to the addition of another element. The first, and probably the simplest, response occurs when the *two materials are insoluble in one another in the solid state*. In this case the base metal and the alloying addition each maintains its individual identity, structure, and properties. The alloy in effect becomes a composite structure, consisting of two types of building blocks in an intimate mechanical mixture.

The second possibility occurs when the *two elements exhibit some degree of solubility in the solid state*. The two materials form a *solid solution*, where the alloy element dissolves in the base metal. The solutions can be (1) *substitutional* or (2) *interstitial*. In the substitutional solution, atoms of the alloy element occupy lattice sites normally filled by atoms of the base metal. In an interstitial solution, the alloy element atoms squeeze into the open spaces between the atoms of the base metal lattice.

A third possibility exists where the *elements combine to form intermetallic compounds*. In this case, the atoms of the alloying element interact with the atoms of the base metal in definite proportions and in definite geometric relationships. The bonding is primarily of the nonmetallic variety (i.e., ionic or covalent), and the lattice structures are often quite complex. Because of the type of bonding, intermetallic compounds tend to be hard, but brittle, high-strength materials.

Even though alloys are composed of more than one type of atom, their structure is still one of crystalline lattices and grains. Their behavior in response to applied loadings is similar to that of pure metals, with some features reflecting the increased level of structural complexity. Dislocation movement can be further impeded by the presence of unlike atoms. If neighboring grains have different chemistries and/or structures, they may respond differently to the same type and magnitude of load.

3.18 ATOMIC STRUCTURE AND ELECTRICAL PROPERTIES

In addition to mechanical properties, the structure of a material also influences its physical properties, such as its electrical behavior. *Electrical conductivity* refers to the net movement of charge through a material. In metals, the charge carriers are the valence electrons. The more perfect the atomic arrangement, the greater the freedom of electron movement and the higher the electrical conductivity. Lattice imperfections or irregularities provide impediments to electron transport, and lower conductivity.

The electrical resistance of a metal, therefore, depends largely on two factors: (1) lattice imperfections and (2) temperature. Vacant atomic sites, interstitial atoms, substitutional atoms, dislocations, and grain boundaries all act as disruptions to the regularity of a crystalline lattice. Thermal energy causes the atoms to vibrate about their equilibrium position. These vibrations cause the atoms to be out of position, which further interferes with electron travel. For a metal, electrical conductivity will decrease with an increase in temperature. As the temperature drops, the number and type of crystalline imperfections become more of a factor. The best metallic conductors, therefore, are pure metals with large grain size, at low temperature.

The electrical conductivity of a metal is due to the movement of the free electrons in the metallic bond. For covalently bonded materials, however, bonds must be broken to provide the electrons for charge transport. Therefore, the electrical properties of these materials is a function of bond strength. Diamond, for instance, has strong bonds and is a strong insulator. Silicon and germanium have weaker bonds that are more easily broken by thermal energy. These materials are known as *intrinsic semiconductors*, since moderate amounts of thermal energy enable them to conduct small amounts of electricity. Continuing down Group IV of the periodic table of elements, we find that tin has such weak bonding that a high number of bonds are broken at room temperature, and the electrical behavior resembles that of a metal.

The electrical conductivity of intrinsic semiconductors can be substantially improved by a process known as *doping*. Silicon and germanium each have four valence electrons and form four covalent bonds. If one of the bonding atoms were replaced with an atom containing five valence electrons, such as phosphorus or arsenic, four covalent bonds would form, leaving an additional valence electron that is not involved in the bonding process. This extra electron would be free to move about and provide additional conductivity. Materials doped in this manner are known as *n-type extrinsic semiconductors*.

A similar effect can be created by substituting an atom with only three valence electrons, such as aluminum. An electron will be missing from one of the bonds, creating an *electron hole*. When a voltage is applied, a nearby electron can jump into this hole, creating a hole in the location that it vacated. Movement of electron holes is equivalent to a countermovement of electrons and thus provides additional conductivity. Materials containing dopants with three valence electrons are known as *p-type semiconductors*. The ability to control the electrical conductivity of semiconductor material is the functional basis of solid-state electronics and circuitry.

In ionically bonded materials, all electrons are captive to atoms (ions). Charge transport, therefore, requires the movement of entire atoms, not electrons. Consider a large block of salt (sodium chloride). It is a good electrical insulator until it becomes wet, whereupon the ions are free to move in the liquid solution and conductivity is observed.

■ Key Words

allotropic
alloy
amorphous structure
anisotropic
ASTM grain size number
body-centered cubic
brittle fracture
close-packed planes
cold work
covalent bond
cross slip
crystal structure
dislocation
doping
ductile fracture
edge dislocation
elastic deformation
electrical conductivity
extrinsic semiconductor
face-centered cubic
grain
grain boundary
grain growth
grain size
hexagonal close-packed
hot work
intermetallic compound
interstitial
intrinsic semiconductor
ion
ionic bond
isotropic
lattice
metallic bond
microstructure
molecular structure
negative ion
nucleation and growth
plastic deformation
Poisson's ratio
polarization
polymorphic
positive ion
primary bond
recrystallization
screw dislocation
secondary bonds
simple cubic
slip
slip system
solid solution
strain hardening
structure
substitutional atom
unit cell
vacancy
valence electrons
van der Waals forces
work hardening

Review Questions

1. Why might an engineer be concerned with controlling or altering the structure of a material?
2. What are the next levels of structure that are greater than the atom?
3. What is meant by the term *microstructure*?
4. What is an ion and what are the two varieties?
5. What properties or characteristics of a material are influenced by the valence electrons?
6. What are the three types of primary bonds, and what types of atoms do they unite?
7. What are some general characteristics of ionically bonded materials?
8. What are some general properties and characteristics of covalently bonded materials?
9. What are some unique property features of materials bonded by metallic bonds?
10. For what common engineering materials are van der Waals forces important?
11. What is the difference between a crystalline material and one with an amorphous structure?
12. What is a lattice? A unit cell?
13. What are some of the general characteristics of metallic materials?
14. What is an allotropic material?
15. Why is the simple cubic crystal structure not observed in the engineering metals?
16. What are the three most common crystal structures found in metals?
17. What is the efficiency of filling space with spheres in the simple cubic structure? Body-centered-cubic structure? Face-centered-cubic structure? Hexagonal-close-packed structure?
18. What is the dominant characteristic of body-centered-cubic metals? Face-centered-cubic metals? Hexagonal-close-packed metals?
19. What is a grain boundary?
20. What is the most common means of describing or quantifying the grain size of a solid metal?
21. What is implied by a low ASTM grain size number? A large ASTM grain size number?
22. How does a metallic crystal respond to low applied loads?
23. What is plastic deformation?
24. What is a slip system in a material? What types of planes and directions tend to be preferred?
25. What structural features account for each of the dominant properties cited in Question 18?
26. What is a dislocation? What role do dislocations play in determining the mechanical properties of a metal?
27. What are some of the common barriers to dislocation movement that can be used to strengthen metals?
28. What are the three major types of point defects in crystalline materials?
29. What is the mechanism (or mechanisms) responsible for the observed deformation strengthening or strain hardening of a metal?
30. Why is a fine grain size often desired in an engineering metal?
31. What is an anisotropic property? Why might anisotropy be a concern?
32. What is the difference between brittle fracture and ductile fracture?
33. How does a metal increase its internal energy during plastic deformation?
34. In what ways can recrystallization be used to enable large amounts of deformation without fear of fracture?
35. What is the major distinguishing feature between hot and cold working?
36. Why is grain growth usually undesirable?
37. What types of structures can be produced when an alloy element is added to a base metal?
38. As a result of ionic or covalent bonding, what types of mechanical properties are characteristic of intermetallic compounds?
39. How is electrical charge transported in a metal (electrical conductivity)?
40. What features in a metal structure tend to impede or reduce electrical conductivity?
41. What is the difference between an intrinsic semiconductor and an extrinsic semiconductor?

Problems

1. It is not uncommon for subsequent processing to expose manufactured products to extremely elevated temperatures. Zinc coatings can be applied by immersion into a bath of molten zinc (hot-dip galvanizing). Welding actually melts and resolidifies the crystalline metals. Brazing deposits molten filler metal. How might each of the structural features listed below, and their associated properties, be altered by an exposure to elevated temperature?
    a. A recrystallized polycrystalline metal
    b. A cold-worked metal
    c. A solid-solution alloy such as brass, where zinc atoms dissolve and disperse throughout copper
2. Polyethylene consists of fibrous molecules of covalently bonded atoms tangled and interacting like the fibers of a cotton ball. Weaker van der Waals forces act between the molecules with a strength that is inversely related to separation distance.
    a. What properties of polyethylene can be attributed to the covalent bonding?
    b. What properties are most likely the result of the weaker van der Waals forces?
    c. If we pull on the ends of a cotton ball, the cotton fibers go from a random arrangement to an array of somewhat aligned fibers. Assuming we get a similar response from deformed polyethylene, how might properties change? Why?

CHAPTER 4

EQUILIBRIUM PHASE DIAGRAMS AND THE IRON–CARBON SYSTEM

■ 4.1 INTRODUCTION

As our study of engineering materials becomes more focused on specific metals and alloys, it is increasingly important that we acquire an understanding of their natural characteristics and properties. What is the basic structure of the material? Is the material uniform throughout, or is it a mixture of two or more distinct components? If there are multiple components, how much of each is present, and what are the different chemistries? Is there a component that may impart undesired properties or characteristics? What will happen if temperature is increased or decreased, pressure is changed, or chemistry is varied? The answers to these and other important questions can be obtained through the use of *equilibrium phase diagrams*.

■ 4.2 PHASES

Before we move to a discussion of equilibrium phase diagrams, it is important that we first develop a working definition of the term *phase*. As a starting definition, a phase is simply a form of material possessing a characteristic structure and characteristic properties. Uniformity of chemistry, structure, and properties is assumed throughout a phase. More rigorously, a phase has *a definable structure, a uniform and identifiable chemistry* (also known as *composition*), and distinct *boundaries* or *interfaces* that separate it from other different phases.

A phase can be continuous (like the air in a room) or discontinuous (like grains of salt in a shaker). A phase can be solid, liquid, or gas. In addition, a phase can be a pure substance or a solution, provided that the structure and composition are uniform throughout. Alcohol and water mix in all proportions and will therefore form a single phase when combined. There are no boundaries across which structure and/or chemistry changes. Oil and water, on the other hand, tend to form isolated regions with distinct boundaries and must be regarded as two distinct phases. Ice cubes in water are another two-phase system, since there are two distinct structures with interfaces between them.

■ 4.3 EQUILIBRIUM PHASE DIAGRAMS

An *equilibrium phase diagram* is a graphic mapping of the natural tendencies of a material or a material system, assuming that equilibrium has been attained for all possible conditions. There are three primary variables to be considered: *temperature, pressure*,

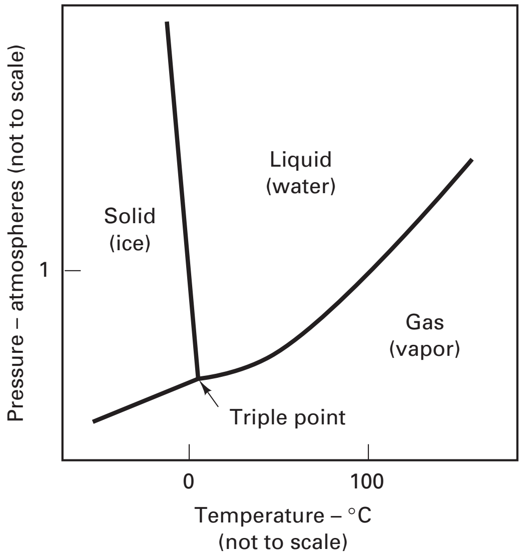

FIGURE 4-1 Pressure–temperature equilibrium phase diagram for water.

and *composition*. The simplest phase diagram is a pressure–temperature (*P–T*) diagram for a fixed-composition material. Areas of the diagram are assigned to the various phases, with the boundaries indicating the equilibrium conditions of transition.

As an introduction, consider the pressure–temperature diagram for water, presented as Figure 4-1. With the composition fixed as H_2O, the diagram maps the stable form of water for various conditions of temperature and pressure. If the pressure is held constant and temperature is varied, the region boundaries denote the melting and boiling points. For example, at 1 atmosphere pressure, the diagram shows that water melts at 0°C and boils at 100°C. Still other uses are possible. Locate a temperature where the stable phase is liquid at atmospheric pressure. Maintaining the pressure at 1 atmosphere, drop the temperature until the material goes from liquid to solid (i.e., ice). Now, maintain that new temperature and begin to decrease the pressure. A transition will be encountered where solid goes directly to gas without melting (sublimation). The combined process just described, known as *freeze drying*, is employed in the manufacture of numerous dehydrated products. With an appropriate phase diagram, process conditions can be determined that might reduce the amount of required cooling and the magnitude of pressure drop required for sublimation. A process operating about the triple point would be most efficient.

TEMPERATURE–COMPOSITION DIAGRAMS

While the *P–T* diagram for water is an excellent introduction to phase diagrams, *P–T* phase diagrams are rarely used for engineering applications. Most engineering processes are conducted at atmospheric pressure, and variations are more likely to occur in temperature and composition. The most useful mapping, therefore, is usually a *temperature–composition phase diagram* at 1 atmosphere pressure. For the remainder of the chapter, this will be the form of phase diagram that will be considered.

For mapping purposes, temperature is placed on the vertical axis and composition on the horizontal. Figure 4-2 shows the axes for mapping the A–B system, where the left-hand vertical corresponds to pure material A, and the percentage of B (usually expressed in weight percent) increases as we move toward pure material B at the right side of the diagram. The temperature range often includes only solids and liquids, since few processes involve engineering materials in the gaseous state. Experimental investigations that provide the details of the diagram take the form of either vertical or horizontal scans that seek to locate the transitions between phases.

COOLING CURVES

Considerable information can be obtained from vertical scans through the diagram where a fixed-composition material is heated and slowly cooled. If the cooling history

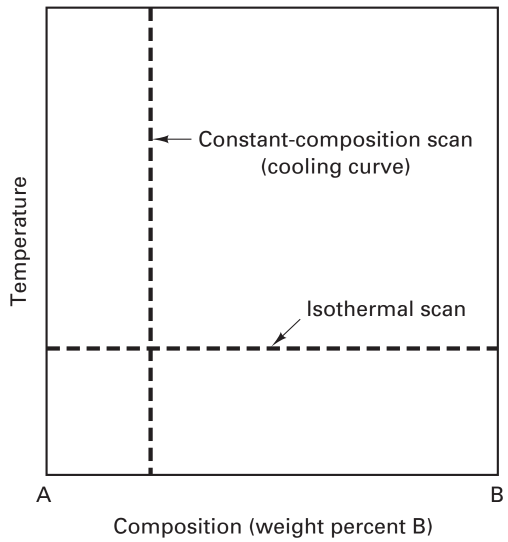

FIGURE 4-2 Mapping axes for a temperature–composition equilibrium phase diagram.

is plotted in the form of a temperature-versus-time plot, known as a *cooling curve*, the transitions in structure will appear as characteristic points, such as slope changes or isothermal (constant-temperature) holds.

Consider the system composed of sodium chloride (common table salt) and water. Five different cooling curves are presented in Figure 4-3. Curve (a) is for pure water being cooled from the liquid state. A decreasing-temperature line is observed for the liquid where the removal of heat produces a concurrent drop in temperature. When the freezing point of 0°C is reached (point *a*), the material begins to change state and releases heat energy as part of the liquid-to-solid transition. Heat is being continuously extracted from the system, but since its source is now the change in state, there is no companion decrease in temperature. An isothermal or constant-temperature hold (*a*–*b*) is observed until the solidification is complete. From this point, as heat extraction continues, the newly formed solid experiences a steady drop in temperature. This type of curve is characteristic of pure metals and other substances with a distinct melting point.

Curve (b) in Figure 4-3 presents the cooling curve for a solution of 10% salt in water. The liquid region undergoes continuous cooling down to point *c*, where the slope abruptly decreases. At this temperature, small particles of ice (i.e., solid) begin to form

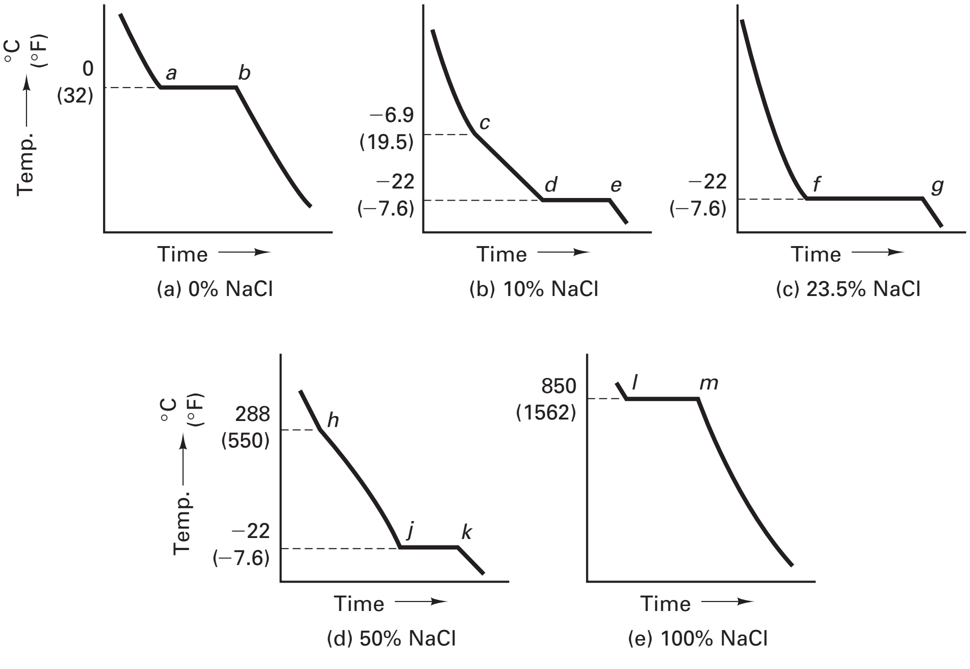

(a) 0% NaCl
(b) 10% NaCl
(c) 23.5% NaCl
(d) 50% NaCl
(e) 100% NaCl

FIGURE 4-3 Cooling curves for five different solutions of salt and water: (a) 0% NaCl; (b) 10% NaCl; (c) 23.5% NaCl; (d) 50% NaCl; (e) 100% NaCl.

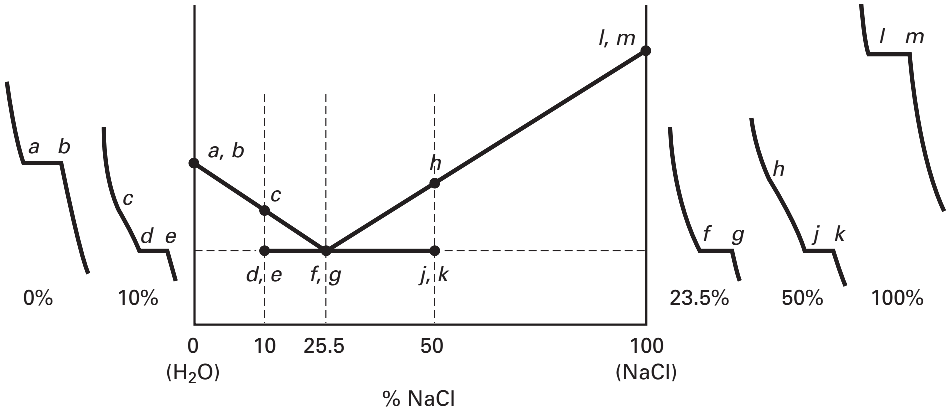

FIGURE 4-4 Partial equilibrium diagram for NaCl and H_2O derived from cooling-curve information.

and the reduced slope is attributed to the energy released in this transition. The formation of these ice particles leaves the remaining solution richer in salt and imparts a lower freezing temperature. Further cooling results in the formation of additional solid, which continues to enrich the solution and further lowers the freezing point of the remaining liquid. Instead of possessing a distinct melting point or freezing point, this material is said to have a *freezing range*. When the temperature of point *d* is reached, the remaining liquid undergoes an abrupt reaction and solidifies into an intimate mixture of solid salt and solid water (discussed later), and an isothermal hold is observed. Further extraction of heat produces a drop in the temperature of the fully solidified material.

For a solution of 23.5% salt in water, a distinct freezing point is again observed, as shown in curve (c). Compositions with richer salt concentration, such as curve (d), show phenomena similar to those in curve (b), but with salt being the first solid to form from the liquid. Finally, the curve for pure salt, curve (e), exhibits behavior similar to that of pure water.

If the observed transition points are now transferred to a temperature–composition diagram, such as Figure 4-4, we have the beginnings of a map that summarizes the behavior of the system. Line *a–c–f–h–l*, denoting the lowest temperature at which the material is totally liquid, is known as the *liquidus* line. Line *d–f–j* denotes a particular three-phase reaction and will be discussed later. Between the lines, two phases coexist, one being a liquid and the other a solid. The equilibrium phase diagram, therefore, can be viewed as a collective presentation of cooling-curve data for an entire range of alloy compositions.

Our cooling-curve studies have provided some key information regarding the salt–water system, including some insight into the use of salt on highways in the winter. With the addition of salt, the freezing point of water can be lowered from 0°C (32°F) to as low as −22°C (−7.6°F).

SOLUBILITY STUDIES

The observant reader will note that the ends of the diagram still remain undetermined. Both pure materials have a distinct melting point, below which they appear as a pure solid. Can ice retain some salt in a single-phase solid solution? Can solid salt hold some water and remain a single phase? If so, how much, and does the amount vary with temperature? Completion of the diagram, therefore, requires several horizontal scans to determine any *solubility limits* and their possible variation with temperature.

These isothermal (constant-temperature) scans usually require the preparation of specimens over a range of composition and their subsequent examination by X-ray techniques, microscopy, or other methods to determine whether the structure and chemistry are uniform or indicate a two-phase mixture. As we move away from a pure material, we often encounter a single-phase solid solution, in which a small amount of one component is dissolved and dispersed throughout the other. If there is a limit to this solubility, there will be a line in the phase diagram, known as a *solvus* line, denoting the conditions where the single-phase solid solution becomes a two-phase mixture. Figure 4-5 presents the equilibrium phase diagram for the lead–tin system, using the conventional notation in

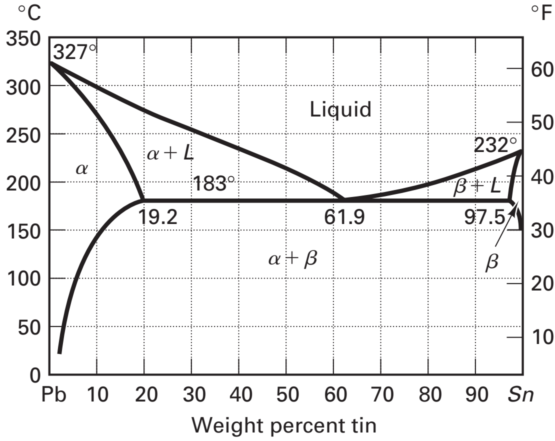

FIGURE 4-5 Lead–tin equilibrium phase diagram.

which Greek letters are used to denote the various single-phase solids. The upper portion of the diagram closely resembles the salt–water diagram, but the partial solubility of one material in the other can be observed on both ends of the diagram.[1]

COMPLETE SOLUBILITY IN BOTH LIQUID AND SOLID STATES

Having developed the basic concepts of equilibrium phase diagrams, we now consider a series of examples in which solubility changes. If two materials are completely soluble in each other in both the liquid and solid states, a rather simple diagram results, like the copper–nickel diagram of Figure 4-6. The upper line is the *liquidus* line, the lowest temperature for which the material is 100% liquid. Above the liquidus, the two materials form a uniform-chemistry liquid solution. The lower line, denoting the highest temperature at which the material is completely solid, is known as a *solidus* line. Below the solidus, the materials form a solid-state solution in which the two types of atoms are uniformly distributed throughout a single crystalline lattice. Between the liquidus and solidus is a *freezing range*, a two-phase region where liquid and solid solutions coexist.

PARTIAL SOLID SOLUBILITY

Many materials do not exhibit complete solubility in the solid state. Each is often soluble in the other up to a certain limit or saturation point, which varies with temperature. Such a diagram has already been observed for the lead–tin system in Figure 4-5.

At the point of maximum solubility, 183°C, lead can hold up to 19.2 wt% tin in a single-phase solution and tin can hold up to 2.5% lead within its structure and still be a single phase. If the temperature is decreased, however, the amount of *solute* that can be held in solution decreases in a continuous manner. If a saturated solution of tin in lead

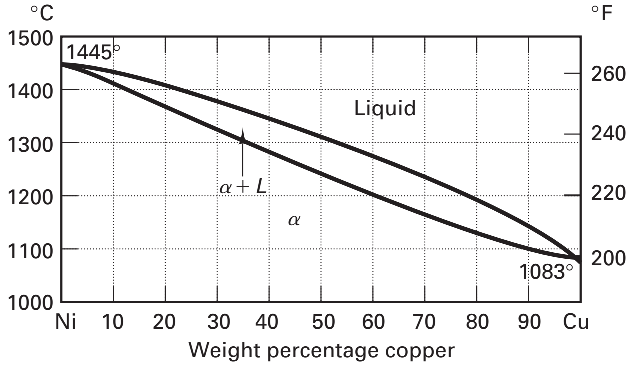

FIGURE 4-6 Copper–nickel equilibrium phase diagram, showing complete solubility in both liquid and solid states.

---

[1] Lead–tin solders have had a long history in joining electronic components. With the miniaturization of components and the evolution of the circuit board to multitudes of circuits on single chips, exposure to the potentially damaging temperatures of the soldering operation became an increasing concern. Figure 4-5 reveals why 60–40 solder (60 wt% tin) became the primary joining material in the lead–tin system. Of all possible alloys, it has the lowest (all-liquid) melting temperature.

is cooled from 183°C, the material will go from a single-phase solution to a two-phase mixture as a tin-rich second phase precipitates from solution. This change in structure can be used to alter and control the properties in a number of engineering alloys.

INSOLUBILITY

If one or both of the components are totally insoluble in the other, the diagrams will also reflect this phenomenon. Figure 4-7 illustrates the case where component A is completely insoluble in component B in both the liquid and solid states.

UTILIZATION OF DIAGRAMS

Before moving to more complex diagrams, let us first return to a simple phase diagram, such as the one in Figure 4-8, and develop several useful tools. For each point of temperature and composition, we would like to obtain three pieces of information:

1. *The phases present.* The stable phases can be determined by simply locating the point of consideration on the temperature–composition mapping and identifying the region of the diagram in which the point appears.

2. *The composition of each phase.* If the point lies in a single-phase region, there is only one component present, and the composition (or chemistry) of the phase is simply the composition of the alloy being considered. If the point lies in a two-phase region, a *tie-line* must be constructed. A tie-line is simply an isothermal (constant-temperature) line drawn through the point of consideration, terminating at the boundaries of the single-phase regions on either side. The compositions where the tie-line intersects the neighboring single-phase regions will be the compositions of those respective phases in the two-phase mixture. For example, consider point *a* in Figure 4-8. The tie-line for this temperature runs from S_2 to L_2. The tie-line intersects the solid-phase region at point S_2. Therefore, the solid in the two-phase mixture at point *a* has the composition of point S_2. Since the other end of the tie-line intersects the liquid region at L_2, the liquid phase that is present at point *a* will have the composition of point L_2.

3. *The amount of each phase present.* If the point lies in a single-phase region, all of the material, or 100%, must be of that phase. If the point lies in a two-phase region, the relative amounts of the two components can be determined by a *lever-law* calculation using the previously drawn tie-line. Consider the cooling of alloy X in Figure 4-8 in a manner sufficiently slow so as to preserve equilibrium. At temperatures above t_1 the material is in a single-phase liquid state. Temperature t_1, therefore, is the lowest temperature at which the alloy is 100% liquid. If we draw a tie-line at this temperature, it runs from S_1 to L_1 and lies entirely to the left of composition X. At temperature t_3, the alloy is

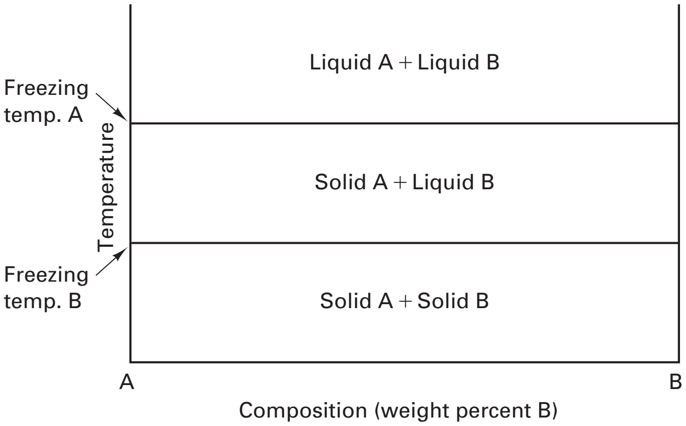

FIGURE 4-7 Equilibrium diagram of two materials that are completely insoluble in each other in both the liquid and solid states.

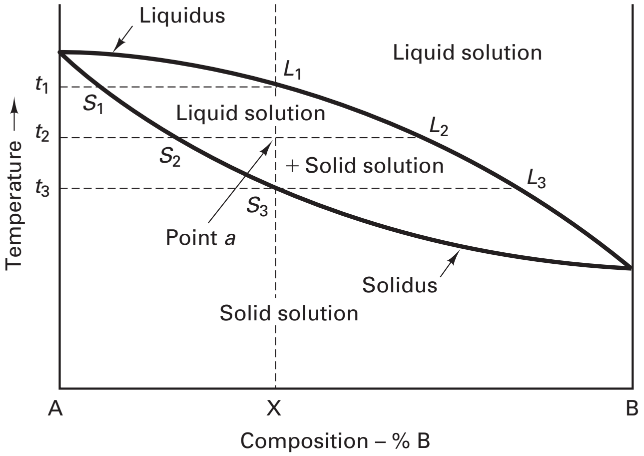

FIGURE 4-8 Equilibrium diagram showing the changes that occur during the cooling of alloy X.

completely solid, and the tie-line lies completely to the right of composition X. As the alloy cools from temperature t_1 to temperature t_3, the amount of solid goes from zero to 100% while the segment of the tie-line that lies to the right of composition X also goes from zero to 100%. Similarly, the amount of liquid goes from 100% to zero as the segment of the tie-line lying to the left of composition X undergoes a similar change. Extrapolating these observations to intermediate temperatures, such as temperature t_2, we predict that the fraction of the tie-line that lies to the left of point *a* corresponds to the fraction of the material that is liquid. This fraction can be computed as:

$$\frac{a - S_2}{L_2 - S_2} \times 100\%$$

where the values of a, S_2, and L_2 are their composition values in weight percent B. In a similar manner, the fraction of solid corresponds to the fraction of the tie-line that lies to the right of point *a*. (*Note*: These mathematical relations could be rigorously derived from the conservation of either A or B atoms, as the material divides into the two different compositions of S_2 and L_2.) Since the calculations consider the tie-line as a lever with the phases at each end and the fulcrum at the composition line, they are called *lever-law* calculations.

Equilibrium phase diagrams can also be used to provide an overall picture of an alloy system or to identify the transition points for phase changes in a given alloy. For example, the temperature required to redissolve a second phase or melt an alloy can be easily determined. The various changes that will occur during the slow heating or slow cooling of a material can now be predicted. In fact, most of the questions posed at the beginning of this chapter can be answered.

SOLIDIFICATION OF ALLOY X

Let us now apply the tools that we have just developed, tie-lines and lever laws, to follow the solidification of alloy X in Figure 4-8. At temperature t_1, the first minute amount of solid forms with the chemistry of point S_1. As the temperature drops, more solid forms, but the chemistries of both the solid and liquid phases shift to follow the tie-line endpoints. The chemistry of the liquid follows the liquidus line, and the chemistry of the solid follows the solidus. Finally, at temperature t_3, solidification is complete, and the composition of the single-phase solid is now that of alloy X, as required.

The composition of the first solid to form is different from that of the final solid. If the cooling is sufficiently slow, such that equilibrium is maintained or approximated, the composition of the entire mass of solid changes during cooling and follows the endpoint of the tie-line. These chemistry changes are made possible by diffusion, the process in which atoms migrate through the crystal lattice given sufficient time at elevated temperature. If the cooling rate is too rapid, however, the temperature may drop before sufficient diffusion occurs. The resultant material will have a nonuniform chemistry. The initial solid that formed will retain a chemistry that is different from the solid regions that form later. When these nonequilibrium variations occur on a microscopic level, the resultant structure is referred to as being *cored*. Variation on a larger scale is called *macrosegregation*.

THREE-PHASE REACTIONS

Several of the phase diagrams that were presented earlier contain a feature in which phase regions are separated by a horizontal (or constant-temperature) line. These lines are further characterized by either a V intersecting from above or an inverted-V intersecting from below. The intersection of the V and the line denotes the location of a *three-phase equilibrium reaction*.

One common type of three-phase reaction, known as a *eutectic*, has already been observed in Figures 4-4 and 4-5. It is possible to understand these reactions through use of the tie-line and lever-law concepts that have been developed. Refer to the lead–tin diagram of Figure 4-5 and consider any alloy containing between 19.2 and 97.5 wt% tin at a temperature just above the 183°C horizontal line. Tie-line and lever-law computations reveal that the material contains either a lead-rich or tin-rich solid and remaining liquid. At this temperature, any liquid that is present will have a composition of 61.9 wt% tin, regardless of the overall composition of the alloy. If we now focus on this liquid and allow it to cool to just below 183°C, a transition occurs in which the liquid of composition 61.9% tin transforms to a mixture of lead-rich solid with 19.2% tin and tin-rich solid containing 97.5% tin. The three-phase reaction that occurs upon cooling through 183°C can be written as:

$$\text{liquid}_{61.9\%\ \text{Sn}} \xrightarrow{183^\circ\text{C}} \alpha_{19.2\%\ \text{Sn}} + \beta_{97.5\%\ \text{Sn}}$$

Note the similarity to the very simple chemical reaction in which water dissociates, or separates, into hydrogen and oxygen: $H_2O \longrightarrow H_2 + \frac{1}{2}O_2$. Since the two solids in the lead–tin eutectic reaction have chemistries on either side of the original liquid, a similar separation must have occurred. Any chemical separation requires atom movement, but the distances involved in a eutectic reaction cannot be great. The resulting structure, known as *eutectic structure*, will be an intimate mixture of the two single-phase solids, with a multitude of interphase boundaries.

For a given reaction, the eutectic structure always forms from the same chemistry at the same temperature and therefore has its own characteristic set of physical and mechanical properties. Alloys with the eutectic composition have the lowest melting point of all neighboring alloys and generally possess relatively high strength. For these reasons, they are often used as casting alloys or as filler material in soldering or brazing operations.

The eutectic reaction can be written in the general form of:

$$\text{liquid} \longrightarrow \text{solid}_1 + \text{solid}_2$$

Figure 4-9 summarizes the various forms of three-phase reactions that may occur in engineering systems, along with the generic description of the reaction shown below the figures.[2] These include the *peritectic*, *monotectic*, and *syntectic* reactions, where the suffix *-ic* denotes that at least one of the three phases in the reaction is a liquid. If the same prefix appears with an *-oid* suffix, the reaction is of a similar form but all phases involved are solids. Two such reactions are the *eutectoid* and the *peritectoid*. The separation eutectoid produces an extremely fine two-phase mixture, and the combination peritectoid reaction is very sluggish since all of the chemistry changes must occur within (usually crystalline) solids.

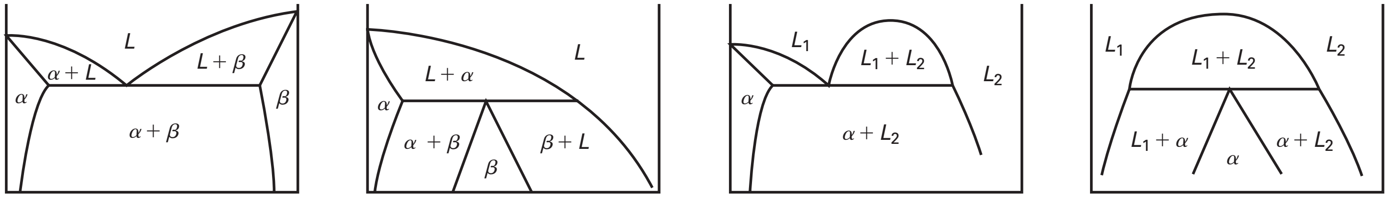

Eutectic ($L \rightarrow S_1 + S_2$)

Peritectic ($L + S_1 \rightarrow S_2$)

Monotectic ($L_1 \rightarrow S_1 + L_2$)

Syntectic ($L_1 + L_2 \rightarrow S_1$)

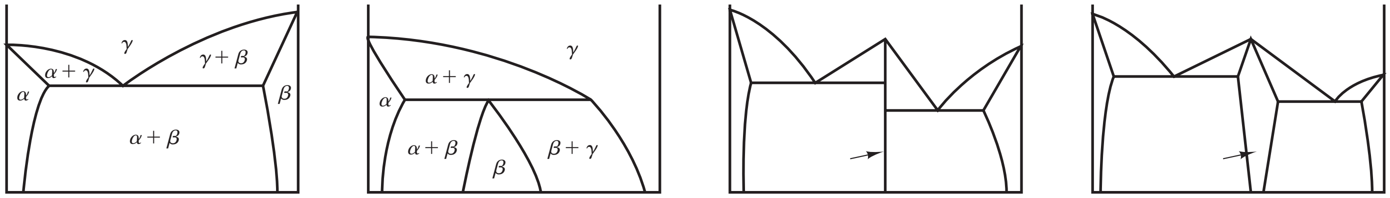

Eutectoid ($S_1 \rightarrow S_2 + S_3$)

Peritectoid ($S_1 + S_2 \rightarrow S_3$)

Stoichiometric intermetallic compound

Nonstoichiometric intermetallic compound

FIGURE 4-9 Schematic summary of three-phase reactions and intermetallic compounds.

---

[2] To determine the specific form of a three-phase reaction, locate its horizontal line and the V intersecting from either above or below the line. Go above the point of the V and write the phases that are present. Then go below and identify the equilibrium phases. Write the reaction as the phases above the line transform to those below. Apply this method to the diagrams in Figure 4-9 to identify the specific reactions, and compare them to their generic forms presented below the figures, remembering that Greek letters denote single-phase solids.

INTERMETALLIC COMPOUNDS

A final phase diagram feature occurs in alloy systems where the bonding attraction between the component materials is strong enough to form stable compounds. These compounds are single-phase solids and tend to break the diagram into recognizable subareas. If components A and B form a compound, and the compound cannot tolerate any deviation from its fixed atomic ratio, the product is known as a *stoichiometric intermetallic compound* and it appears as a single vertical line in the diagram. (*Note*: This will be seen for the Fe_3C iron carbide at 6.67 wt.% carbon in the upcoming iron–carbon equilibrium diagram.) If some degree of chemical deviation is tolerable, the vertical line expands into a single-phase region, and the compound is known as a *nonstoichiometric intermetallic compound*. Figure 4-9 shows schematic representations of both stoichiometric and nonstoichiometric compounds.

Intermetallic compounds appear as single phases in the middle of equilibrium diagrams, with locations consistent with whole-number atomic ratios, such as AB, A_2B, AB_2, A_3B, AB_3, and so on.[3] In general, they tend to be hard, brittle materials, since these properties are a consequence of their ionic or covalent bonding. If they are present in large quantities or lie along grain boundaries in the form of a continuous film, the overall alloy can be extremely brittle. If the same compound is dispersed throughout the alloy in the form of small discrete particles, the result can be a considerable strengthening of the base metal.

COMPLEX DIAGRAMS

The equilibrium diagrams for actual alloy systems may be one of the basic types just discussed or some combination of them. In some cases the diagrams appear to be quite complex and formidable. However, by focusing on a particular composition and analyzing specific points using the tie-line and lever-law concepts, even the most complex diagram can be interpreted and understood. If the properties of the various components are known, phase diagrams can be used to predict the behavior of resultant structures.

4.4 IRON–CARBON EQUILIBRIUM DIAGRAM

Steel, composed primarily of iron and carbon, is clearly the most important of the engineering metals. For this reason, the iron–carbon equilibrium diagram assumes special importance. The diagram most frequently encountered, however, is not the full iron–carbon diagram but the iron–iron carbide diagram shown in Figure 4-10. Here, a

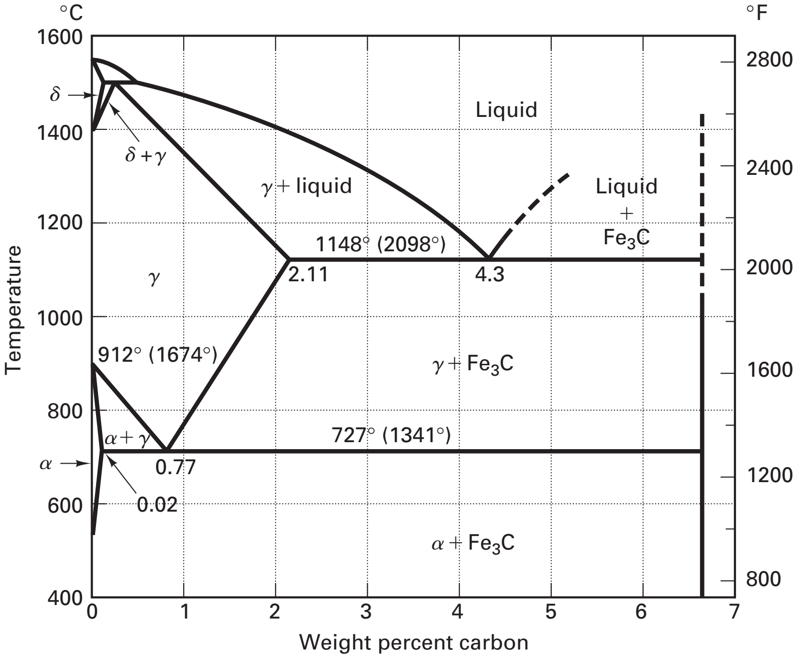

FIGURE 4-10 The iron–carbon equilibrium phase diagram. Single phases are α, ferrite; γ, austenite; δ, δ–ferrite; Fe_3C, cementite.

---

[3] The use of "weight percent" along the horizontal axis tends to mask the whole-number atomic ratio of intermetallic compounds. Many equilibrium phase diagrams now include a second horizontal scale to reflect "atomic percent." Intermetallic compounds then appear at atomic percents of 25, 33, 50, 67, 75, and similar values that reflect whole-number atomic ratios.

stoichiometric intermetallic compound, Fe_3C, is used to terminate the carbon range at 6.67 wt% carbon. The names of key phases and structures, and the specific notations used on the diagram, have evolved historically and will be used in their generally accepted form.

There are four single-phase solids within the diagram. Three of these occur in pure iron, and the fourth is the iron carbide intermetallic that forms at 6.67% carbon. Upon cooling, pure iron solidifies into a body-centered-cubic solid that is stable down to 1394°C (2541°F). Known as *delta-ferrite*, this phase is present only at extremely elevated temperatures and has little engineering importance. From 1394° to 912°C (2541° to 1674°F) pure iron assumes a face-centered-cubic structure known as *austenite* in honor of the famed metallurgist Roberts-Austen of England. Designated by the Greek letter γ, austenite exhibits the high formability that is characteristic of the face-centered-cubic structure and is capable of dissolving over 2% carbon in single-phase solid solution. Hot forming of steel takes advantage of the low strength, high ductility, and chemical uniformity of austenite. Most of the heat treatments of steel begin by forming the high-temperature austenite structure. Alpha-ferrite, or more commonly just *ferrite*, is the stable form of iron at temperatures below 912°C (1674°C). This body-centered-cubic structure can hold only 0.02 wt% carbon in solid solution and forces the creation of a two-phase mixture in most steels. Upon further cooling to 770°C (1418°F), iron undergoes a transition from nonmagnetic to magnetic. The temperature of this transition is known as the Curie point, but because it is not associated with any change in phase (but is an atomic-level transition), it does not appear on the equilibrium phase diagram.

The fourth single phase is the stoichiometric intermetallic compound Fe_3C, which goes by the name *cementite*, or iron–carbide. Like most intermetallics, it is quite hard and brittle, and care should be exercised in controlling the structures in which it occurs. Alloys with excessive amounts of cementite, or cementite in undesirable form, tend to have brittle characteristics. Because cementite dissociates prior to melting, its exact melting point is unknown, and the liquidus line remains undetermined in the high-carbon region of the diagram.

Three distinct three-phase reactions can also be identified. At 1495°C (2723°F), a *peritectic* reaction occurs for alloys with a low weight percentage of carbon. Because of its high temperature and the extensive single-phase austenite region immediately below it, the peritectic reaction rarely assumes any engineering significance. A *eutectic* is observed at 1148°C (2098°F), with the eutectic composition of 4.3% carbon. All alloys containing more than 2.11% carbon will experience the eutectic reaction and are classified by the general term *cast irons*. The final three-phase reaction is a *eutectoid* at 727°C (1341°F) with a eutectoid composition of 0.77 wt% carbon. Alloys with less than 2.11% carbon miss the eutectic reaction and form a two-phase mixture when they cool through the eutectoid. These alloys are known as *steels*. The point of maximum solubility of carbon in iron, 2.11 wt%, therefore, forms an arbitrary separation between steels and cast irons.

4.5 STEELS AND THE SIMPLIFIED IRON–CARBON DIAGRAM

If we focus on the materials normally known as steel, the phase diagram of Figure 4-10 can be simplified considerably. Those portions near the delta phase (or peritectic) region are of little significance, and the higher-carbon region of the eutectic reaction only applies to cast irons. By deleting these segments and focusing on the eutectoid reaction, we can use the simplified diagram of Figure 4-11 to provide an understanding of the properties and processing of steel.

Rather than beginning with liquid, our considerations generally begin with high-temperature, face-centered-cubic, single-phase austenite. The key transition will be the conversion of austenite to the two-phase ferrite plus carbide mixture as the temperature drops. Control of this reaction, which arises as a result of the drastically different carbon solubilities of the face-centered and body-centered structures, enables a wide range of properties to be achieved through heat treatment.

To begin to understand these processes, consider a steel of the eutectoid composition, 0.77% carbon, being slow cooled along line x–x' in Figure 4-11. At the upper

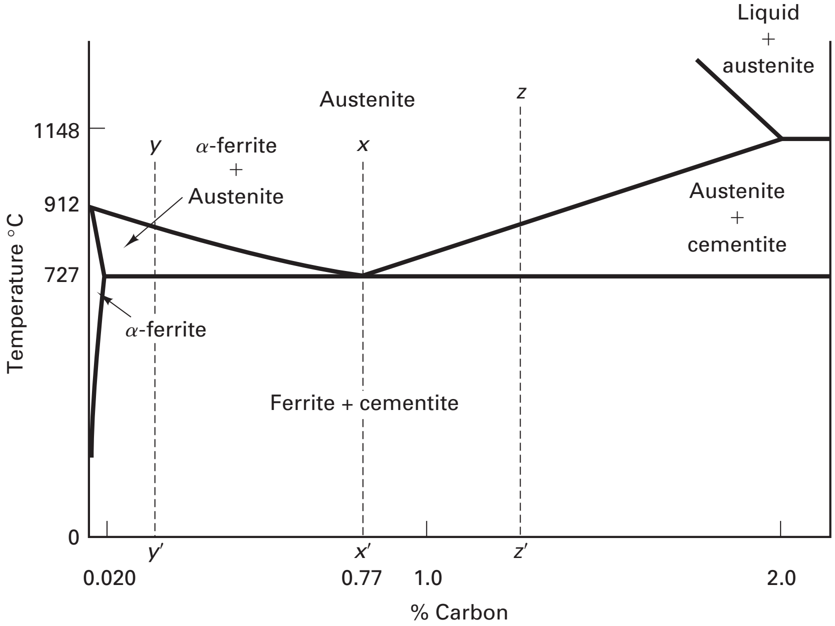

FIGURE 4-11 Simplified iron–carbon phase diagram with labeled regions. Figure 4-10 shows the more standard Greek letter notation.

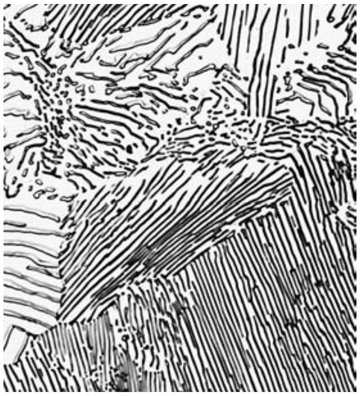

FIGURE 4-12 Pearlite; 1000X. *(Courtesy of United States Steel Corp., Pittsburgh, PA.)*

temperatures, only austenite is present, with the 0.77% carbon being dissolved in solid solution within the face-centered structure. When the steel cools through 727°C (1341°F), several changes occur simultaneously. The iron wants to change crystal structure from the face-centered-cubic austenite to the body-centered-cubic ferrite, but the ferrite can only contain 0.02% carbon in solid solution. The excess carbon is rejected and forms the carbon-rich intermetallic known as cementite. The net reaction at the eutectoid, therefore, is:

$$\text{austenite}_{0.77\%\ \text{C; FCC}} \longrightarrow \text{ferrite}_{0.02\%\ \text{C; BCC}} + \text{cementite}_{6.67\%\ \text{C}}$$

Since the chemical separation occurs entirely within crystalline solids, the resultant structure is a fine mixture of ferrite and cementite. Specimens prepared by polishing and etching in a weak solution of nitric acid and alcohol reveal a lamellar structure composed of alternating layers or plates, as shown in Figure 4-12. Since it always forms from a fixed composition at a fixed temperature, this structure has its own set of characteristic properties (even though it is composed of two distinct phases) and goes by the name *pearlite* because of its metallic luster and resemblance to mother-of-pearl when viewed at low magnification.

Steels having less than the eutectoid amount of carbon (less than 0.77%) are called *hypoeutectoid steels* (*hypo* means "less than"). Consider the cooling of a typical hypoeutectoid alloy along line y–y' in Figure 4-11. At high temperatures the material is entirely austenite. Upon cooling, however, it enters a region where the stable phases are ferrite and austenite. Tie-line and lever-law calculations show that the low-carbon ferrite nucleates and grows, leaving the remaining austenite richer in carbon. At 727°C (1341°F), the remaining austenite will have assumed the eutectoid composition (0.77% carbon), and further cooling transforms it to pearlite. The resulting structure, therefore, is a mixture of *primary* or *proeutectoid ferrite* (ferrite that forms before the eutectoid reaction) and regions of pearlite as shown in Figure 4-13.

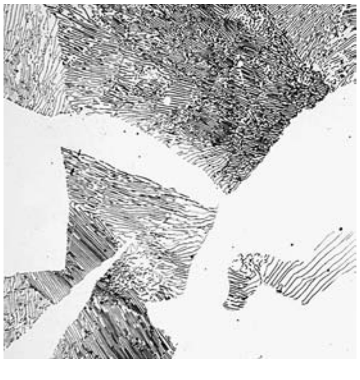

FIGURE 4-13 Photomicrograph of a hypoeutectoid steel showing regions of primary ferrite (white) and pearlite; 500X. *(Courtesy of United States Steel Corp., Pittsburgh, PA.)*

Hypereutectoid steels (*hyper* means "greater than") are those that contain more than the eutectoid amount of carbon. When such a steel cools, as along line z–z' in Figure 4-11, the process is similar to the hypoeutectoid case, except that the primary or proeutectoid phase is now cementite instead of ferrite. As the carbon-rich phase nucleates and grows, the remaining austenite decreases in carbon content, again reaching the

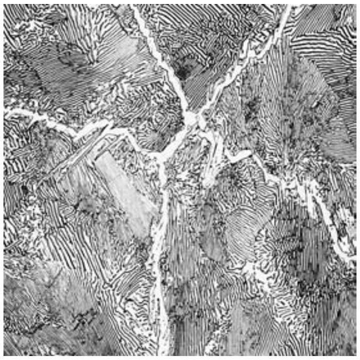

FIGURE 4-14 Photomicrograph of a hypereutectoid steel showing primary cementite along grain boundaries; 500X. *(Courtesy of United States Steel Corp., Pittsburgh, PA.)*

eutectoid composition at 727°C (1341°F). As before, this austenite transforms to pearlite upon slow cooling through the eutectoid temperature. Figure 4-14 is a photomicrograph of the resulting structure, which consists of primary cementite and pearlite. In this case the continuous network of primary cementite (an intermetallic) will cause the material to be extremely brittle.

It should be noted that the transitions just described are for equilibrium conditions, which can be approximated by slow cooling. Upon slow heating, the transitions will occur in the reverse manner. When the alloys are cooled rapidly, however, entirely different results may be obtained, since sufficient time may not be provided for the normal phase reactions to occur. In these cases, the equilibrium phase diagram is no longer a valid tool for engineering analysis. Since the rapid-cool processes are important in the heat treatment of steels and other metals, their characteristics will be discussed in Chapter 5, and new tools will be introduced to aid our understanding. Steels and other ferrous metals, including stainless steels and tool steels, will be further developed in Chapter 6.

■ 4.6 CAST IRONS

Iron–carbon alloys with more than 2.11% carbon experience the eutectic reaction during cooling and are known as *cast irons*. The term *cast iron* applies to an entire family of metals with a wide variety of properties. Being relatively inexpensive, with good fluidity and rather low liquidus temperatures, they are readily cast and occupy an important place in engineering applications.

Most commercial cast irons also contain a significant amount of silicon. A typical cast iron contains 2.0 to 4.0% carbon, 0.5 to 3.0% silicon, less than 1.0% manganese, and less than 0.2% sulfur. Silicon produces several major effects. First, it partially substitutes for carbon, so that use of the equilibrium phase diagram requires replacing the weight percent carbon scale with a *carbon equivalent*. Several formulations exist to compute the carbon equivalent, with the simplest being the weight percent carbon plus one-third the weight percent silicon:

$$\text{carbon equivalent (CE)} = (\text{wt \% carbon}) + \tfrac{1}{3}(\text{wt \% silicon})$$

The high silicon enhances the oxidation and corrosion resistance of cast irons by promoting the formation of a tightly adhering surface oxide. Silicon also tends to promote the formation of graphite as the carbon-rich single phase instead of the Fe_3C intermetallic. The eutectic reaction now has two distinct possibilities, as indicated in the modified phase diagram of Figure 4-15:

$$\text{liquid} \longrightarrow \text{austenite} + Fe_3C$$
$$\text{liquid} \longrightarrow \text{austenite} + \text{graphite}$$

The final microstructure of cast iron, therefore, has two possible extremes: (1) all of the carbon-rich phase being intermetallic Fe_3C and (2) all of the carbon-rich phase being *graphite*. In practice, both of these extremes can be approached by controlling the chemistry and other process variables. Graphite formation is promoted by slow cooling, high carbon and silicon contents, heavy or thick section sizes, *inoculation* practices, and the presence of sulfur, phosphorus, aluminum, magnesium, antimony, tin, copper, nickel, and cobalt. Cementite (Fe_3C) formation is favored by fast cooling, low carbon and silicon levels, thin sections, and alloy additions of titanium, vanadium, zirconium, chromium, manganese, and molybdenum.

TYPES OF CAST IRON

Various types of cast iron can be produced, depending on the chemical composition, cooling rate, and the type and amount of inoculants that are used. (Inoculants and

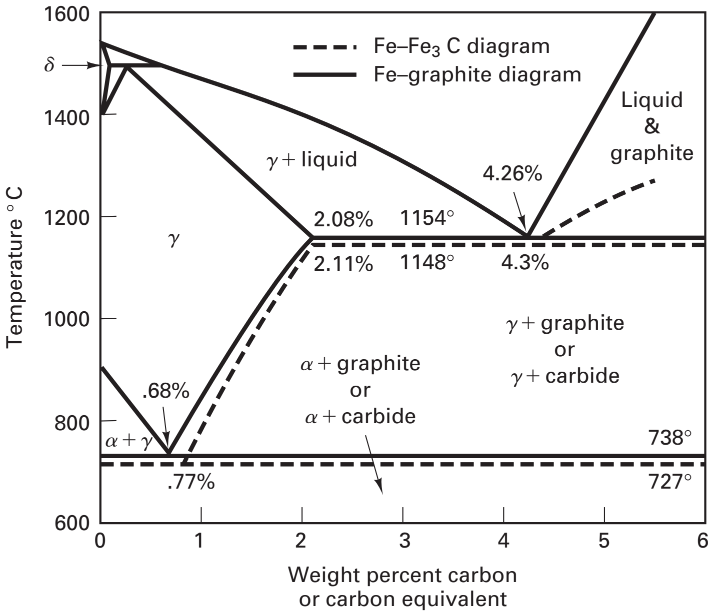

FIGURE 4-15 An iron–carbon diagram showing two possible high-carbon phases. Solid lines denote the iron–graphite system; dashed lines denote iron–cementite (or iron–carbide).

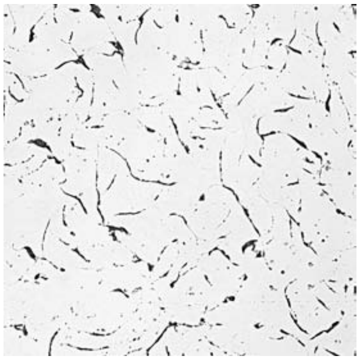

FIGURE 4-16 Photomicrograph of typical gray cast iron; 1000X. *(Courtesy of Bethlehem Steel Corporation, Bethlehem, PA.)*

inoculation practice will be discussed shortly.) *Gray cast iron*, the least expensive and most common variety, is characterized by those features that promote the formation of graphite. Typical compositions range from 2.5 to 4.0% carbon, 1.0 to 3.0% silicon, and 0.4 to 1.0% manganese. The microstructure consists of three-dimensional graphite flakes (which form during the eutectic reaction) dispersed in a matrix of ferrite, pearlite, or other iron-based structure that forms from the cooling of austenite. Figure 4-16 presents a typical section through gray cast iron, showing the graphite flakes dispersed throughout the metal matrix. Because the graphite flakes have no appreciable strength, they act essentially as voids in the structure. The pointed edges of the flakes act as preexisting notches or crack initiation sites, giving the material a characteristic brittle nature. Since a large portion of any fracture follows the graphite flakes, the freshly exposed fracture surfaces have a characteristic gray appearance, and a graphite smudge can usually be obtained if one rubs a finger across the fracture. On a more positive note, the formation of the lower-density graphite reduces the amount of shrinkage that occurs when the liquid goes to solid, making possible the production of more complex iron castings.

The size, shape, and distribution of the graphite flakes have a considerable effect on the overall properties of gray cast iron. When maximum strength is desired, small, uniformly distributed flakes with a minimum amount of intersection are preferred. A more effective means of controlling strength, however, is through control of the metal matrix structure, which is in turn controlled by the carbon and silicon contents and the cooling rate of the casting. Gray cast iron is normally sold by *class*, with the class number corresponding to the minimum tensile strength in thousands of pounds per square inch. Class 20 iron (minimum tensile strength of 20,000 psi) consists of high-carbon-equivalent metal with a ferrite matrix. Higher strengths, up to class 40, can be obtained with lower carbon equivalents and a pearlite matrix. To go above class 40, alloying is required to provide solid solution strengthening, and heat-treatment practices must be performed to modify the matrix. Gray cast irons can be obtained up through class 80, but regardless of strength the presence of the graphite flakes results in extremely low ductility.

Gray cast irons offer excellent compressive strength (compressive forces do not promote crack propagation, so compressive strength is typically 3–4 times tensile strength), excellent machinability (graphite acts to break up the chips and lubricate contact surfaces), good resistance to adhesive wear and galling (graphite flakes self-lubricate), and outstanding sound- and vibration-damping characteristics (graphite flakes absorb transmitted energy). Table 4-1 compares the relative damping capacities of various engineering metals, and clearly shows the unique characteristic of the high-carbon-equivalent gray cast

TABLE 4-1 Relative Damping Capacity of Various Metals

Material	Damping Capacity[a]
Gray iron (high carbon equivalent)	100–500
Gray iron (low carbon equivalent)	20–100
Ductile iron	5–20
Malleable iron	8–15
White iron	2–4
Steel	4
Aluminum	0.4

[a] Natural log of the ratio of successive amplitudes

irons (20–25 times better than steel and 250 times better than aluminum!). High silicon contents promote good corrosion resistance and the enhanced fluidity desired for casting operations. For these reasons, coupled with low cost, high thermal conductivity, low rate of thermal expansion, good stiffness, resistance to thermal fatigue, and 100% recyclability, gray cast iron is specified for a number of applications, including automotive engine blocks, heads, and cylinder liners; transmission housings; machine tool bases; and large equipment parts that are subjected to compressive loads and vibrations.

White cast iron has all of its excess carbon in the form of iron carbide and receives its name from the white surface that appears when the material is fractured. Features promoting its formation are those that favor cementite over graphite: a low carbon equivalent (1.8 to 3.6% carbon, 0.5 to 1.9% silicon, and 0.25 to 0.8% manganese) and rapid cooling.

Because the large amount of iron carbide dominates the microstructure, white cast iron is very hard and brittle, and finds applications where high abrasion resistance is the dominant requirement. For these uses it is also common to pursue the hard, wear-resistant *martensite* structure as the metal matrix. (*Note:* This structure will be described in Chapter 5.) In this way, both the metal matrix and the high-carbon second phase contribute to the wear-resistant characteristics of the material.

White cast iron surfaces can also be formed over a base of another material. For example, mill rolls that require extreme wear resistance may have a white cast iron surface over a steel interior. Accelerated cooling rates produced by tapered sections or metal chill bars placed in the molding sand can be used to produce white iron surfaces at selected locations of a gray iron casting. Where regions of white and gray cast iron occur in the same component, there is generally a transition region comprised of both white and gray irons, known as the *mottled zone*.

When white cast iron is exposed to an extended heat treatment at temperatures in the range of 900°C (1650°F), the cementite will dissociate into its component elements, and some or all of the carbon will be converted into irregularly-shaped nodules of graphite (also referred to as clump or popcorn graphite). The product, known as *malleable cast iron*, has significantly greater ductility than that of gray cast iron because the more favorable graphite shape removes the internal notches. The rapid cooling required to produce the starting white iron structure restricts the size and thickness of malleable iron products such that most weigh less than 5 kg (10 lb).

Various types of malleable iron can be produced, depending on the type of heat treatment that is employed. If the white iron is heated and held for a prolonged time just below the melting point, the carbon in the cementite converts to graphite (first-stage graphitization). Subsequent slow cooling through the eutectoid reaction causes the carbon-containing austenite to transform to ferrite and more graphite (second-stage graphitization). The resulting product, known as *ferritic malleable cast iron*, has a structure of irregular particles of graphite dispersed in a ferrite matrix (Figure 4-17). Typical properties would be: 10% elongation; 35-ksi (240-MPa) yield strength; 50-ksi (345-MPa) tensile strength; and excellent impact strength, corrosion resistance, and machinability. The heat-treatment times, however, are quite lengthy, often involving over 100 hours at elevated temperature.

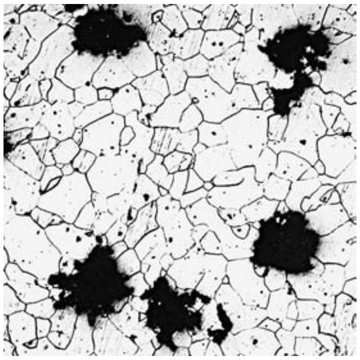

FIGURE 4-17 Photomicrograph of malleable iron showing the irregular graphite spheroids, here in a ferrite matrix. *(Courtesy of Iron Castings Society, Rocky River, OH.)*

If the material is cooled more rapidly through the eutectoid transformation, the carbon in the austenite does not form additional graphite but is retained in a pearlite or martensite matrix. The resulting *pearlitic malleable cast iron* is characterized by higher strength and lower ductility than its ferritic counterpart. Properties range from 1 to 4% elongation, 45- to 85-ksi (310- to 590-MPa) yield strength, and 65- to 105-ksi (450- to 725-MPa) tensile strength, with reduced machinability compared to the ferritic material.

The modified graphite structure of malleable iron provided quite an improvement in properties compared to gray cast iron, but it would be even more attractive if it could be obtained directly upon solidification rather than through a prolonged heat treatment at highly elevated temperature. If a high-carbon-equivalent cast iron is sufficiently low in sulfur (either by original chemistry or by desulfurization), the addition of certain materials can promote graphite formation and change the morphology (shape) of the graphite product. If ferrosilicon is injected into the melt (*inoculation*), it will promote the formation of graphite. If magnesium (in the form of an MgFeSi or MgNi alloy) is also added just prior to solidification, the graphite will form as smooth-surface spheres. The latter addition is known as a *nodulizer*, and the product becomes *ductile* or *nodular cast iron*. Subsequent control of cooling can produce a variety of matrix structures, with ferrite or pearlite being the most common (Figure 4-18). By controlling the matrix structure, properties can be produced that span a wide range from 2 to 18% elongation, 40- to 90-ksi (275- to 620-MPa) yield strength, and 60- to 120-ksi (415- to 825-MPa) tensile strength. The combination of good ductility, high strength, toughness, wear resistance, machinability, low-melting-point castability, and up to a 10% weight reduction compared to steel makes ductile iron an attractive engineering material. High silicon–molybdenum ductile irons offer excellent high-temperature strength and good corrosion resistance. Unfortunately, the costs of a nodulizer, higher-grade melting stock, better furnaces, and the improved process control required for its manufacture combine to place it among the most expensive of the cast irons.

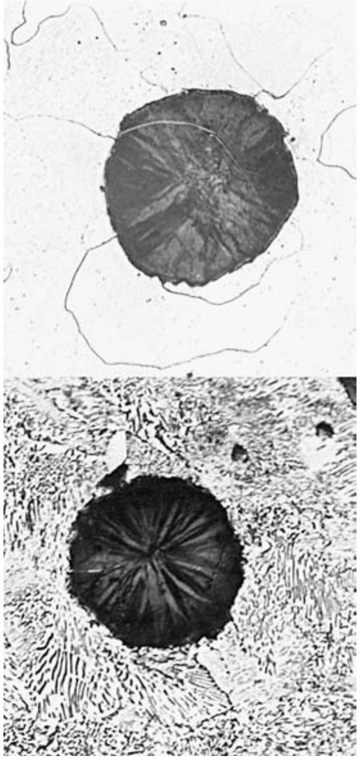

FIGURE 4-18 Ductile cast iron with (a) ferrite matrix and (b) pearlite matrix; 500X. Note the spheroidal shape of the graphite nodule in each photo.

Austempered ductile iron (ADI), ductile iron that has undergone a special austempering heat treatment to modify and enhance its properties,[4] has emerged as a significant engineering material. It combines the ability to cast intricate shapes with strength, fatigue, and wear-resistance properties that are similar to those of heat-treated steel. Compared to conventional as-cast ductile iron, it offers nearly double the strength at the same level of ductility. Compared to steel, it also offers an 8 to 10% reduction in density (so strength-to-weight ratio is excellent) and enhanced damping capability, both due to the graphite nodules, but generally poorer machinability and with about a 20% lower elastic modulus. Table 4-2 compares some typical mechanical properties of malleable and ductile irons with the five grades of austempered ductile cast iron that are specified in ASTM Standard A-897.

Compacted graphite cast iron (CGI) is also attracting considerable attention. Produced by a method similar to that used to make ductile iron (an Mg–Ce–Ti addition is made), compacted graphite iron is characterized by a graphite structure that is intermediate to the flake graphite of gray iron and the nodular graphite of ductile iron, and it tends to possess some of the desirable properties and characteristics of each. Table 4-3 shows how the properties of compacted graphite iron bridge the gap between gray and ductile. Strength, stiffness, and ductility are greater than those of gray iron, while castability, machinability, thermal conductivity, and damping capacity all exceed those of ductile. Impact and fatigue properties are good.

ASTM Specification A842 identifies five grades of CGI—250, 300, 350, 400, and 450—where the numbers correspond to tensile strength in megapascals. Areas of application tend to be those where the mechanical properties of gray iron are insufficient and those of ductile iron, along with its higher cost, are considered to be overkill. More specific, compacted graphite iron is attractive when the desired properties include high strength, castability, machinability, thermal conductivity, and thermal shock resistance.

---

[4] The austempering process begins by heating the metal to a temperature between 1500° and 1750°F (815° to 955°C) and holding for sufficient time to saturate the austenite with carbon. The metal is then rapidly cooled to an austempering temperature between 450° and 750°F (230°–400°C), where it is held until all crystal structure changes have completed, and then cooled to room temperature. High austempering temperatures give good toughness and fatigue properties, while lower austempering temperatures give better strength and wear resistance.

TABLE 4-2 Typical Mechanical Properties of Malleable, Ductile, and Austempered Ductile Cast Irons

Class or Grade	Minimum Yield Strength		Minimum Tensile Strength		Minimum Percentage Elongation	Brinell Hardness Number
	ksi	MPa	ksi	MPa		
Malleable Iron[a]						
M3210	32	224	50	345	10	156 max
M4504	45	310	65	448	4	163–217
M5003	50	345	75	517	3	187–241
M5503	55	379	75	517	3	187–241
M7002	70	483	90	621	2	229–269
M8501	85	586	105	724	1	269–302
Ductile Iron[b]						
60–40–18	40	276	60	414	18	149–187
65–45–12	45	310	65	448	12	170–207
80–50–06	55	379	80	552	6	187–248
100–70–03	70	483	100	689	3	217–269
120–90–02	90	621	120	827	2	240–300
Austempered Ductile Iron[c]						
1	80	550	125	850	10	269–321
2	100	700	150	1050	7	302–363
3	125	850	175	1200	4	341–444
4	155	1100	200	1400	1	388–477
5	185	1300	230	1600	–	444–555

[a] ASTM Specification A602 (Also SAE J 158).
[b] ASTM Specification A536.
[c] ASTM Specification A897.

TABLE 4-3 Typical Properties of Pearlitic Gray, Compacted Graphite, and Ductile Cast Irons

Property	Gray	CGI	Ductile
Tensile strength (MPa)	250	450	750
Elastic modulus (Gpa)	105	145	160
Elongation (%)	0	1.5	5
Thermal conductivity (w/mk)	48	37	28
Relative damping capacity (Gray = 1)	1	0.35	0.22

THE ROLE OF PROCESSING ON PROPERTIES

While typical properties have been presented for the various types of cast iron, it should be noted that the properties of all metals are influenced by how they are processed. For cast materials, properties will vary with the manner of solidification and cooling. Because cast components often have complex geometries, the cooling rate may vary from location to location, with companion variation in properties. To assure compliance with industry specifications, standard geometry test bars are often cast along with manufactured products so the material can be evaluated and properties ensured independent of product geometry.

Key Words

austempered ductile iron
austenite
carbon equivalent
cast iron
cementite
class
compacted graphite
complete solubility
composition
cooling curve
cored structure
ductile cast iron
equilibrium
eutectic
eutectic structure
eutectoid
ferrite
freezing range
graphite
gray cast iron
hypereutectoid
hypoeutectoid
inoculation
interfaces
intermetallic compound
lever law
liquidus
macrosegregation
malleable cast iron
martensite
monotectic
mottled zone
nodular cast iron
nodulizer
nonstoichiometric
pearlite
peritectic
peritectoid
phase
phase diagram
primary phase
solidus
solubility limit
solute
solvus
steel
stoichiometric
syntectic
three-phase reaction
tie-line
white cast iron

Review Questions

1. What are some features that are useful in defining a phase?
2. Supplement the examples provided in the text with another example of a single phase that is each of the following: continuous, discontinuous, gaseous, and a liquid solution.
3. What is an equilibrium phase diagram?
4. What three primary variables are generally considered in equilibrium phase diagrams?
5. Why is a pressure–temperature phase diagram not that useful for most engineering applications?
6. What is a cooling curve?
7. What features in a cooling curve indicate some form of change in a material's structure?
8. What is a solubility limit, and how might it be determined?
9. In general, how does the solubility of one material in another change as temperature is increased?
10. Describe the conditions of complete solubility, partial solubility, and insolubility.
11. What types of changes occur upon cooling through a liquidus line? A solidus line? A solvus line?
12. What three pieces of information can be obtained for each point in an equilibrium phase diagram?
13. What is a tie-line? For what types of phase diagram regions would it be useful?
14. What points on a tie-line are used to determine the chemistry (or composition) of the component phases?
15. What tool can be used to compute the relative amounts of the component phases in a two-phase mixture? How does this tool work?
16. What is a cored structure? Under what conditions is it produced?
17. What features in a phase diagram can be used to identify three-phase reactions?
18. What is the general form of a eutectic reaction?
19. What is the general form of the eutectic structure?
20. Why are alloys of eutectic composition attractive for casting and as filler metals in soldering and brazing?
21. What is a stoichiometric intermetallic compound, and how would it appear in a temperature–composition phase diagram? How would a nonstoichiometric intermetallic compound appear?
22. What type of mechanical properties would be expected for intermetallic compounds?
23. In what form(s) might intermetallic compounds be undesirable in an engineering material? In what form(s) might they be attractive?
24. What are the four single phases in the iron–iron carbide diagram? Provide both the phase diagram notation and the assigned name.
25. What feature in the iron–carbon diagram is used to distinguish between cast irons and steels?
26. What features of austenite make it attractive for forming operations? What features make it attractive as a starting structure for many heat treatments?
27. Which of the three-phase reactions in the iron–carbon diagram is most important in understanding the behavior of steels? Write this reaction in terms of the interacting phases and their composition.
28. Describe the relative ability of iron to dissolve carbon in solution when in the form of austenite (the elevated temperature phase) and when in the form of ferrite at room temperature.
29. What is pearlite? Describe its structure.
30. What is a hypoeutectoid steel, and what structure will it assume upon slow cooling? What is a hypereutectoid steel and how will its structure differ from that of a hypoeutectoid?
31. In addition to iron and carbon, what other element is present in rather large amounts in cast iron?
32. What is a carbon equivalent and how is it computed?
33. What are the two possible high-carbon phases in cast irons? What features tend to favor the formation of each?
34. Describe the microstructure of gray cast iron.
35. Which of the structural units is generally altered to increase the strength of a gray cast iron?
36. What are some of the attractive engineering properties of gray cast iron?
37. What are some of the key limitations to the engineering use of gray cast iron?
38. What is the dominant mechanical property of white cast iron?
39. What structural feature is responsible for the increased ductility and fracture resistance of malleable cast iron?
40. How is malleable cast iron produced?
41. What is unique about the graphite that forms in ductile cast iron?
42. What requirements of ductile iron manufacture are responsible for its increased cost over materials such as gray cast iron?
43. What are some of the attractive features of austempered ductile cast iron?
44. Compacted graphite iron has a structure and properties intermediate to what two other types of cast irons?

Problems

1. Obtain a binary (two-component) phase diagram for a system not discussed in this chapter. Identify each:
   a. Single Phase
   b. Three-phase reaction
   c. Intermetallic compound
2. Identify at least one easily identified product or component that is currently being produced from each of the following types of cast irons:
   a. Gray cast iron
   b. White cast iron
   c. Malleable cast iron
   d. Ductile cast iron
   e. Compacted graphite cast iron
3. Find an example where one of the types of cast iron has been used in place of a previous material. What feature or features might have prompted the substitution?

www.wiley.com/college/degarmo

Chapter 4 CASE STUDY

The Blacksmith Anvils

As an officer in the Western-America Blacksmith Association, you have determined that a number of your members would like to have a modern equivalent of an 1870-vintage blacksmith anvil. Your objective is to replicate the design but utilize the advantageous features of today's engineering materials. You hope ultimately to identify a producer who will make a limited number of these items for sale and distribution through your monthly magazine. The proposed design is a large forging anvil that has a total length of 20 inches. The top surfaces must be resistant to wear, deformation, and chipping. Estimated mechanical properties call for a yield strength in excess of 70 ksi, an elongation greater than 2%, and a Brinell hardness of 200 or more on the top surface. You feel confident that you will be able to secure a minimum of 500 orders.

1. Discuss the various properties that this part must possess to adequately perform its intended task.

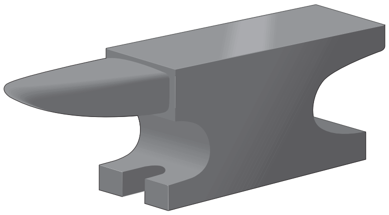

2. Discuss the various concerns that would influence the proposed method of fabricating the anvils.
3. Assuming that the anvils will be made from some form of ferrous metal, consider the properties of the various types of cast irons and steels with regard to this application. Which material would you recommend? Why?
4. How would you propose that a production run of 500 replica anvils be produced?

CHAPTER 5

HEAT TREATMENT

5.1 INTRODUCTION

In the previous chapters, you have been introduced to the interrelationship among the structure, properties, processing, and performance of engineering materials. Chapters 3 and 4 considered aspects of structure, while Chapter 2 focused on properties. In this chapter, we begin to expand on and incorporate processing so that the structure and companion properties can be manipulated and controlled.

Many engineering materials can be characterized not by a single set of properties but by an entire spectrum of possibilities that can be selected and varied at will. *Heat treatment* is the term used to describe *the controlled heating and cooling of materials for the purpose of altering their structures and properties.* The same material can be made weak and ductile for ease in manufacture, and then retreated to provide high strength and good fracture resistance for use and application. Because both physical and mechanical properties (such as strength, toughness, machinability, wear resistance, and corrosion resistance) can be altered by heat treatment and these changes can be induced with no concurrent change in product shape, heat treatment is one of the most important and widely used manufacturing processes.

Technically, the term *heat treatment* applies only to processes where the heating and cooling are performed for the specific purpose of altering properties, but heating and cooling often occur as incidental phases of other manufacturing processes, such as hot forming or welding. The material properties will be altered, however, just as though an intentional heat treatment had been performed, and the results can be either beneficial or harmful. For this reason, both the individual who selects material and the person who specifies its processing must be fully aware of the possible changes that can occur during heating or cooling activities. Heat treatment should be fully integrated with other manufacturing processes if effective results are to be obtained. To provide a basic understanding, this chapter will present both the theory of heat-treatment and a survey of the more common heat-treatment processes. Since more than 90% of all heat treatment is performed on steel and other ferrous metals, these materials will receive the bulk of our attention.

5.2 PROCESSING HEAT TREATMENTS

The term *heat treatment* is often associated with those thermal processes that increase the strength of a material, but the broader definition permits inclusion of another set of processes that we will call *processing heat treatments*. These are often performed as a means of preparing the material for fabrication. Specific objectives may be the improvement of machining characteristics, the reduction of forming forces, or the restoration of ductility to enable further processing.

EQUILIBRIUM DIAGRAMS AS AIDS

Most of the processing heat treatments involve rather slow cooling or extended times at elevated temperatures. These conditions tend to approximate equilibrium, and the resulting structures, therefore, can be reasonably predicted through the use of an *equilibrium phase diagram* (presented in Chapter 4). These diagrams can be used to determine the temperatures that must be attained to produce a desired starting structure, and to describe the changes that will then occur upon subsequent cooling. It should be noted, however, that these diagrams are for true equilibrium conditions, and any departure from equilibrium may lead to substantially different results.

PROCESSING HEAT TREATMENTS FOR STEEL

Because many of the processing heat treatments are applied to plain-carbon and low-alloy steels, they will be presented here with the simplified iron–carbon equilibrium diagram of Figure 4-11 serving as a reference guide. Figure 5-1 shows this diagram with the key transition lines labeled in standard notation. The eutectoid line is designated by the symbol A_1, and A_3 designates the boundary between austenite and ferrite + austenite.[1] The transition from austenite to austenite + cementite is designated as the A_{cm} line.

A number of process heat-treating operations have been classified under the general term of *annealing*. These may be employed to reduce strength or hardness, remove residual stresses, improve toughness, restore ductility, refine grain size, reduce segregation, or alter the electrical or magnetic properties of the material. By producing a certain desired structure, characteristics can be imparted that will be favorable to subsequent operations (such as machining or forming) or applications. Because of the variety of anneals, it is important to designate the specific treatment, which is usually indicated by a preceding adjective. The specific temperatures, cooling rate, and details of the process will depend on the material being treated and the objectives of the treatment.

In the process of *full annealing*, hypoeutectoid steels (less than 0.77% carbon) are heated to 30° to 60°C (50° to 100°F) above the A_3 temperature, held for sufficient time to convert the structure to homogeneous single-phase austenite of uniform composition and temperature, and then slowly cooled at a controlled rate through the A_1 temperature. Cooling is usually done in the furnace by decreasing the temperature by 10° to 30°C (20° to 50°F) per hour to at least 30°C (50°F) below the A_1 temperature.

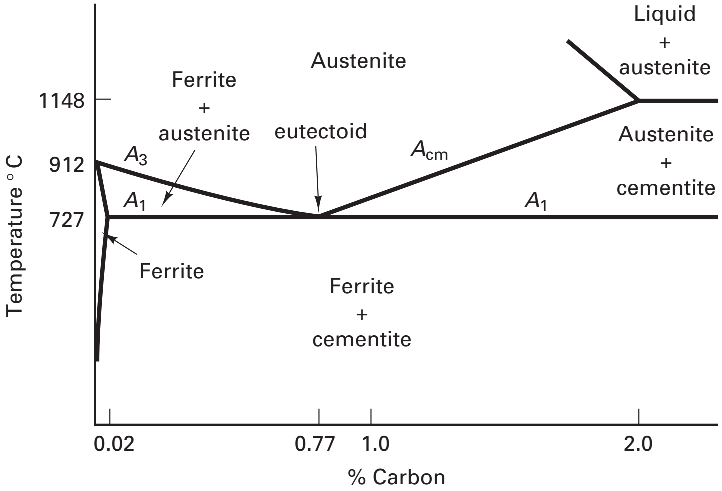

FIGURE 5-1 Simplified iron–carbon phase diagram for steels with transition lines labeled in standard notation as A_1, A_3, and A_{cm}.

---

[1] Historically, an A_2 line once appeared between the A_1 and A_3. This line designated the magnetic property change known as the Curie point. Since this transition was later shown to be an atomic change, not a change in phase, the line was deleted from the equilibrium phase diagram without a companion relabeling.

At this point all structural changes are complete, and the metal can be removed from the furnace and air cooled to room temperature. The resulting structure is one of coarse pearlite (widely spaced layers or lamellae) with excess ferrite in amounts predicted by the equilibrium phase diagram. In this condition, the steel is quite soft and ductile.

The procedure to full-anneal a hypereutectoid alloy (greater than 0.77% carbon) is basically the same, except that the original heating is only into the austenite plus cementite region (30° to 60°C above the A_1). If the material is slow cooled from the all-austenite region, a continuous network of cementite may form on the grain boundaries and make the entire material brittle. When properly annealed, a hypereutectoid steel will have a structure of coarse pearlite with excess cementite in dispersed spheroidal form.

While full anneals produce the softest and weakest properties, they are quite time consuming, and considerable amounts of energy must be spent to maintain the elevated temperatures required during soaking and furnace cooling. When maximum softness and ductility are not required and cost savings are desirable, *normalizing* may be specified. In this process, the steel is heated to 60°C (100°F) above the A_3 (hypoeutectoid) or A_{cm} (hypereutectoid) temperature, held at this temperature to produce uniform austenite, and then removed from the furnace and allowed to cool in still air. The resultant structures and properties will depend on the subsequent cooling rate. Wide variations are possible, depending on the size and geometry of the product, but fine pearlite with excess ferrite or cementite is generally produced.

One should note a key difference between full annealing and normalizing. In the full anneal, the furnace imposes identical cooling conditions at all locations within the metal, which results in identical structures and properties. With normalizing, the cooling will be different at different locations. Properties will vary between surface and interior, and different thickness regions will also have different properties. When subsequent processing involves a substantial amount of machining that may be automated, the added cost of a full anneal may be justified, since it produces a product with uniform machining characteristics at all locations.

If cold working has severely strain-hardened a metal, it is often desirable to restore the ductility, either for service or to permit further processing without danger of fracture. This is often achieved through the *recrystallization* process described in Chapter 3. When the material is a low-carbon steel ($<0.25\%$ carbon), the specific procedure is known as a *process anneal*. The steel is heated to a temperature slightly below the A_1, held long enough to induce recrystallization of the dominant ferrite phase, and then cooled at a desired rate (usually in still air). Since the entire process is performed at temperatures within the same phase region, the process simply induces a change in phase morphology (size, shape, and distribution). The material is not heated to as high a temperature as in the full-anneal or normalizing process, so a process anneal is somewhat cheaper and tends to produce less scaling.

A *stress-relief anneal* may be employed to reduce the *residual stresses* in large steel castings, welded assemblies, and cold-formed products. Parts are heated to temperatures below the A_1 (between 550° and 650°C or 1000° and 1200°F), held for a period of time, and then slow cooled to prevent the creation of additional stresses. Times and temperatures vary with the condition of the component, but the basic microstructure and associated mechanical properties generally remain unchanged.

When high-carbon steels ($>0.60\%$ carbon) are to undergo extensive machining or cold forming, a process known as *spheroidization* is often employed. Here the objective is to produce a structure in which all of the cementite is in the form of small spheroids or globules dispersed throughout a ferrite matrix. This can be accomplished by a variety of techniques, including (1) prolonged heating at a temperature just below the A_1 followed by relatively slow cooling, (2) prolonged cycling between temperatures slightly above and slightly below the A_1, or (3) in the case of tool or high-alloy steels, heating to 750° to 800°C (1400° to 1500°F) or higher and holding at this temperature for several hours, followed by slow cooling.

Although the selection of a processing heat treatment often depends on the desired objectives, steel composition strongly influences the choice. Process anneals are restricted to low-carbon steels, and spheroidization is a treatment for high-carbon material.

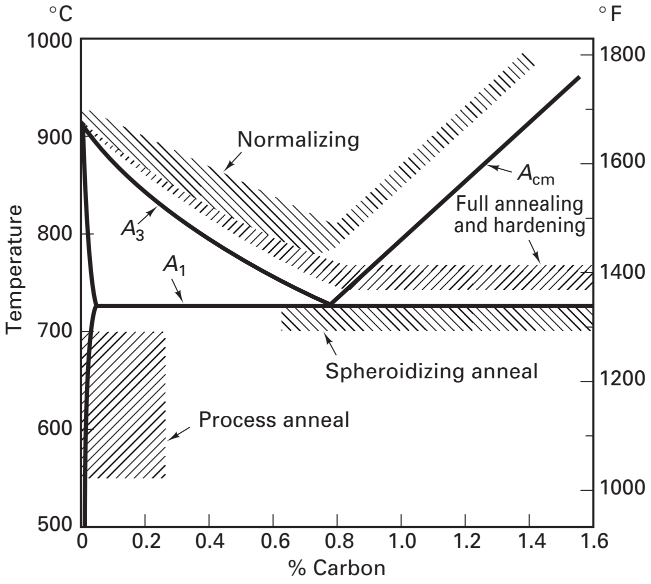

FIGURE 5-2 Graphical summary of the process heat treatments for steels on an equilibrium diagram.

Normalizing and full annealing can be applied to all carbon contents, but even here, preferences are noted. Since different cooling rates do not produce a wide variation of properties in low-carbon steels, the air cool of a normalizing treatment often produces acceptable uniformity. For higher carbon contents, such as the 0.4 to 0.6% range, different cooling rates can produce wider property variations, and the uniform furnace cooling of a full anneal is often preferred. Figure 5-2 provides a graphical summary of the process heat treatments.

HEAT TREATMENTS FOR NONFERROUS METALS

Most of the nonferrous metals do not have the significant phase transitions observed in the iron–carbon system, and for them, the process heat treatments do not play such a significant role. Aside from the strengthening treatment of precipitation hardening, which is discussed later, the nonferrous metals are usually heat treated for three purposes: (1) to produce a uniform, homogeneous structure, (2) to provide stress relief, or (3) to bring about recrystallization. Castings that have been cooled too rapidly can possess a segregated solidification structure known as coring (discussed more fully in Chapter 4). *Homogenization* can be achieved by heating to moderate temperatures and then holding for a sufficient time to allow thorough diffusion to take place. Similarly, heating for several hours at relatively low temperatures can reduce the internal stresses that are often produced by forming, welding, or brazing. *Recrystallization* (discussed in Chapter 3) is a function of the particular metal, the amount of prior straining, and the desired recrystallization time. In general, the more a metal has been strained, the lower the recrystallization temperature or the shorter the time. Without prior straining, however, recrystallization will not occur and heating will only produce undesirable grain growth.

■ 5.3 HEAT TREATMENTS USED TO INCREASE STRENGTH

Six major mechanisms are available to increase the strength of metals:

1. Solid-solution strengthening
2. Strain hardening
3. Grain size refinement
4. Precipitation hardening
5. Dispersion hardening
6. Phase transformations

All of these can be induced or altered by heat treatment, but all may not be applicable to a specific metal or alloy.

In *solid-solution strengthening*, a base metal dissolves other atoms, either as *substitutional solutions*, where the new atoms occupy sites in the host crystal lattice, or as *interstitial solutions*, where the new atoms squeeze into "holes" between the atoms of the base lattice. The amount of strengthening depends on the amount of dissolved solute and the size difference of the atoms involved. Since distortion of the host structure makes dislocation movement more difficult, the greater the size difference, the more effective the addition.

Strain hardening (discussed in Chapter 3) produces an increase in strength by means of plastic deformation under cold-working conditions.

Because grain boundaries act as barriers to dislocation motion, a metal with small grains tends to be stronger than the same metal with larger grains. Thus *grain size refinement* can be used to increase strength, except at elevated temperatures, where grain growth can occur and grain boundary diffusion contributes to creep and failure. It is important to note that grain size refinement is one of the few processes that can improve strength without a companion loss of ductility and toughness.

In *precipitation hardening*, or *age hardening*, strength is obtained from a nonequilibrium structure that is produced by a three-step heat treatment. Details of this method will be provided in Section 5.4.

Strength obtained by dispersing second-phase particles throughout a base material is known as *dispersion hardening*. To be effective, the dispersed particles should be stronger than the matrix, adding strength through both their reinforcing action and the additional interfacial surfaces that present barriers to dislocation movement.

Phase transformation strengthening involves those alloys that can be heated to form a single phase at elevated temperature and subsequently transform to one or more low-temperature phases upon cooling. When this feature is used to increase strength, the cooling is usually rapid and the phases that are produced are usually of a nonequilibrium nature.

5.4 STRENGTHENING HEAT TREATMENTS FOR NONFERROUS METALS

All six of the mechanisms just described can be used to increase the strength of nonferrous metals. Solid-solution strengthening can impart strength to single-phase materials. Strain hardening can be quite useful if sufficient ductility is present. Alloys containing eutectic structure exhibit considerable dispersion hardening. Among all of the possibilities, however, the most effective strengthening mechanism for the nonferrous metals tends to be precipitation hardening.

PRECIPITATION OR AGE HARDENING

To be a candidate for precipitation hardening, an alloy system must exhibit solubility that decreases with decreasing temperature, such as the aluminum-rich portion of the aluminum–copper system shown in Figure 5-3 and enlarged in Figure 5-4. Consider the alloy with 4% copper, and use the phase diagram to determine its equilibrium structure. Liquid metal solidifies into a single-phase solid (α phase). At 1000°F, the full 4% of copper is dissolved and distributed throughout the alpha crystals. As the temperature drops, the maximum solubility of copper in aluminum decreases from 5.65% at 1018°F to less than 0.2% at room temperature. Upon cooling through the solvus (or solubility limit) line at 930°F, the 4% copper alloy enters a two-phase region, and copper-rich theta-phase precipitates form and grow. (*Note*: Theta-phase is actually a hard, brittle intermetallic compound with the chemical formula of $CuAl_2$.) The equilibrium structure, therefore, would be an aluminum-rich alpha-phase structure with coarse theta-phase precipitates, generally lying along alpha-phase grain boundaries where the nucleation of second-phase particles can benefit from the existing interfacial surface.

Whenever two or more phases are present, the material exhibits dispersion strengthening. Dislocations are confined to their own crystal and cannot cross interfacial

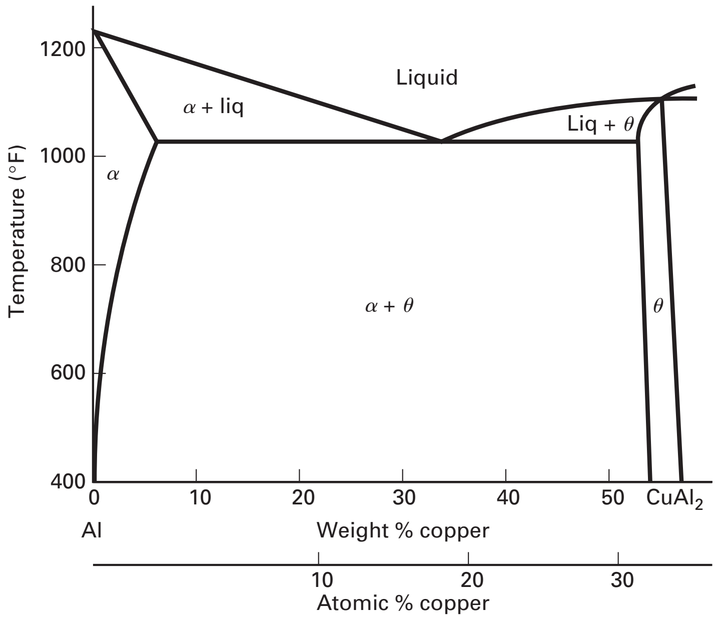

FIGURE 5-3 High-aluminum section of the aluminum–copper equilibrium phase diagram.

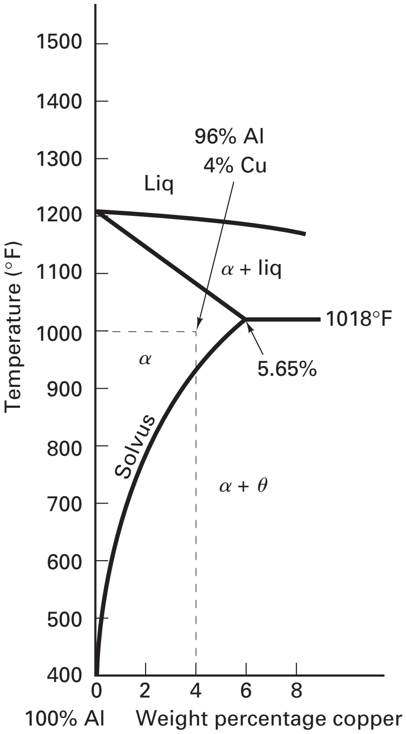

FIGURE 5-4 Enlargement of the solvus-line region of the aluminum–copper equilibrium diagram of Figure 5-3.

boundaries. Therefore, each interface between alpha-phase and the theta-phase precipitate is a strengthening boundary. Take a particle of theta precipitate and cut it into two halves. Forming the two half-size precipitates has just added two additional interfaces, corresponding to both sides of the cut. If the particle were to be further cut into quarters, eighths, and sixteenths, we would expect strength to increase as we continually add interfacial surface. Ideally, we would like to have millions of ultra-small particles dispersed throughout the alpha-phase structure. When we try to form this more desirable nonequilibrium configuration, however, we gain an unexpected benefit that adds significant strength. This new nonequilibrium treatment is known as *age hardening* or *precipitation hardening*.

The process of precipitation hardening is actually a three-step sequence. The first step, known as *solution treatment*, erases the room-temperature structure and redissolves any existing precipitate. The metal is heated to a temperature above the solvus and held in the single-phase region for sufficient time to redissolve the second phase and uniformly distribute the solute atoms (in this case, copper).

If the alloy were slow cooled, the second-phase precipitate would nucleate and the material would revert back to a structure similar to equilibrium. To prevent this from happening, age-hardening alloys are *quenched* from their solution treatment temperature. The rapid-cool quenching, usually in water, suppresses diffusion, trapping atoms in place. The result is a room-temperature *supersaturated* solid solution. In the alloy discussed above, the alpha phase would now be holding 4% copper in solution at room temperature—far in excess of its equilibrium maximum of $<0.2\%$. In this nonequilibrium quenched condition, the material is often soft and can be easily straightened, formed, or machined.

If the supersaturated material were now reheated to a temperature where atom movement (diffusion) could occur, the alloy would attempt to form its equilibrium structure. If the reheating temperature remained within the two-phase region, the excess solute atoms would precipitate out of the supersaturated matrix. This stage of the process, known as *aging*, is actually a continuous transition. Solute atoms begin to cluster at

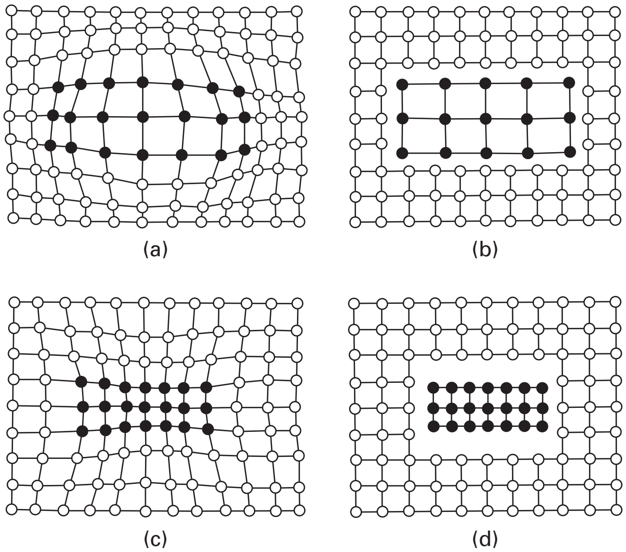

FIGURE 5-5 Two-dimensional illustrations depicting (a) a coherent precipitate cluster where the precipitate atoms are larger than those in the host structure, and (b) its companion overaged or discrete second-phase precipitate particle. Parts (c) and (d) show equivalent sketches where the precipitate atoms are smaller than the host.

locations within the parent crystal, still occupying atom sites within the original lattice. Various transitions may then occur, leading ultimately to the formation of distinct second-phase particles with their own characteristic chemistry and crystal structure.

A key concept in the aging sequence is that of *coherency* or crystalline continuity. If the clustered solute atoms continue to occupy lattice sites within the parent structure, the crystal planes remain continuous in all directions, and the clusters of solute atoms (which are of different size and possibly different valence from the host material) tend to distort or strain the adjacent lattice for a sizable distance in all directions, as illustrated in Figures 5-5a and 5-5c. For this reason, each small cluster appears to be much larger with respect to its ability to interfere with dislocation motion (i.e., impart strength). When the clusters reach a certain size, however, the associated strain becomes so great that the clusters can lower their energy by breaking free from the parent structure to form distinct second-phase particles with their own crystal structure and well-defined interphase boundaries, as shown in Figures 5-5b and 5-5d. Coherency is lost and the strengthening reverts to *dispersion hardening*, where dislocation interference is limited to the actual size of the particle. Strength and hardness decrease, and the material is said to be *overaged*.

Figure 5-6 presents a family of aging curves for the 4% copper–96% aluminum alloy. For higher aging temperatures, the peak properties are achieved in a shorter time,

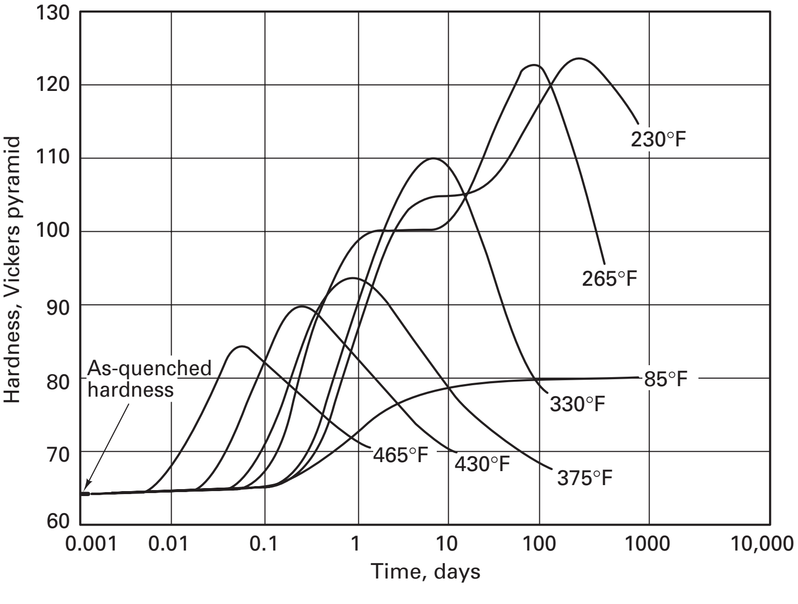

FIGURE 5-6 Aging curves for the Al–4%Cu alloy at various temperatures showing peak strengths and times of attainment. *(Adapted from* Journal of the Institute for Metals, *Vol. 79, p. 321, 1951.)*

but the peak hardness (or strength) is not as great as can be achieved with the finer precipitates and larger amounts that form at lower aging temperatures. Selection of the aging conditions (temperature and time) is a decision that is made on the basis of desired strength, available equipment, and production constraints.

The aging step can be used to divide precipitation-hardening materials into two types: (1) *naturally aging* materials, where room temperature is sufficient to move the unstable supersaturated solution toward the stable two-phase structure, and (2) *artificially aging* materials, where elevated temperatures are required to provide the necessary diffusion. With natural aging materials, such as aluminum alloy rivets, some form of refrigeration may be required to retain the after-quench condition of softness. Upon removal from the refrigeration, the rivets are easily headed but progress to full strength after several days at room temperature.

Since artificial aging requires elevated temperature to provide diffusion, the aging process can be stopped at any time by simply dropping the temperature (quenching). Diffusion is halted, and the current structure and properties are "locked-in," provided that the material is not subsequently exposed to elevated temperatures that would reactivate diffusion. When diffusion is possible, the material will always attempt to revert to its equilibrium structure! According to Figure 5-6, if the 4% copper alloy were aged for one day at 375°F and then quenched to prevent overaging, the metal would attain a hardness of 94 Vickers (and the associated strength) and retain these properties throughout its useful lifetime provided subsequent diffusion did not occur. If a higher strength is required, a lower temperature and longer time could be selected.

Precipitation hardening is an extremely effective strengthening mechanism and is responsible for the attractive engineering properties of many aluminum, copper, magnesium, and titanium alloys. In many cases, the strength can more than double that observed upon conventional cooling. While other strengthening methods are traditionally used with steels and cast irons, those methods have been combined with age hardening to produce some of the highest-strength ferrous alloys, such as the maraging steels and precipitation hardenable stainless.

■ 5.5 STRENGTHENING HEAT TREATMENTS FOR STEEL

Iron-based metals have been heat treated for centuries, and today over 90% of all heat-treatment operations are performed on steel. The striking changes that resulted from plunging red-hot metal into cold water or some other quenching medium were awe-inspiring to the ancients. Those who performed these acts in the making of swords and armor were looked upon as possessing unusual powers, and much superstition arose regarding the process. Because quality was directly related to the act of quenching, great importance was placed on the quenching medium that was used. Urine, for example, was found to be a superior quenching medium, and that from a red-haired boy was deemed particularly effective, as was that from a 3-year-old goat fed only ferns.

ISOTHERMAL TRANSFORMATION DIAGRAM

It has only been within the last century that the art of heat treating has begun to turn into a science. One of the major barriers to understanding was the fact that the strengthening treatments were nonequilibrium in nature. Minor variations in cooling often produced major variations in structure and properties.

A useful aid to understanding nonequilibrium heat treatment processes is the *isothermal-transformation* (I-T) or *time-temperature-transformation* (T-T-T) *diagram*. The information in this diagram is obtained by heating thin specimens of a particular steel to produce elevated-temperature uniform-chemistry austenite, "instantaneously" quenching to a temperature where austenite is no longer the stable phase, holding for variable periods of time at this new temperature, and observing the resultant structures via metallographic photomicrographs (i.e., optical microscope examination).

For simplicity, consider a carbon steel of eutectoid composition (0.77% carbon) and its T-T-T diagram shown as Figure 5-7. Above the A_1 temperature of 1341°F (727°C), austenite is the stable phase and will persist regardless of the time. Below this temper-

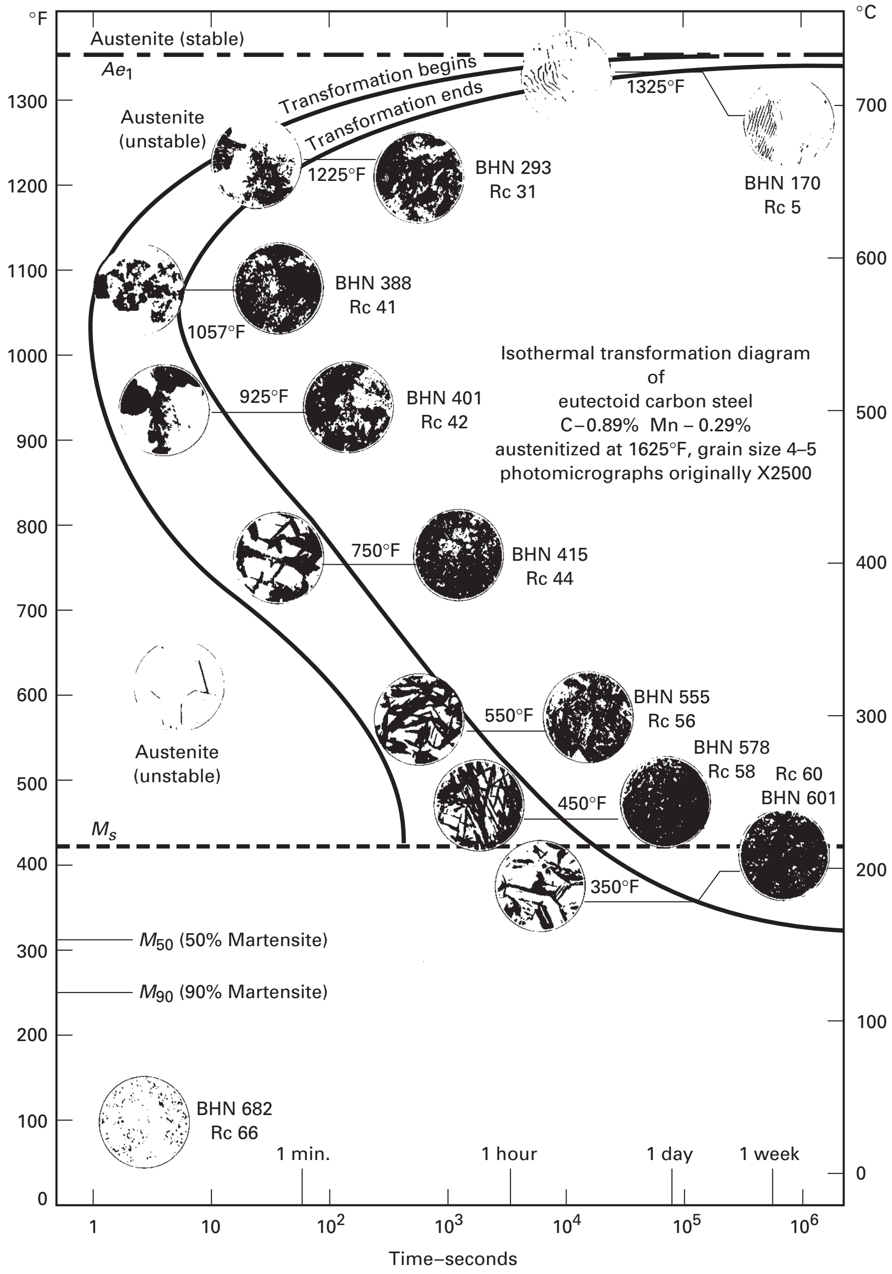

FIGURE 5-7 Isothermal-transformation diagram (T-T-T diagram) for eutectoid composition steel. Structures resulting from transformation at various temperatures are shown as insets. *(Courtesy of United States Steel Corp., Pittsburgh, PA.)*

ature, the face-centered austenite would like to transform to body-centered ferrite and carbon-rich cementite. Two factors control the rate of transition: (1) the motivation or driving force for the change and (2) the ability to form the desired products (i.e., the ability to rearrange the atoms through diffusion). The region below 1341°F in Figure 5-7 can be interpreted as follows. Zero time corresponds to a sample "instantaneously" quenched to its new, lower temperature. The structure is usually unstable austenite. As time passes (moving horizontally across the diagram), a line is encountered representing the start of transformation and a second line indicating completion of the phase change. At elevated temperatures (just below 1341°F), atom movement within the solid (diffusion) is rapid, but the rather sluggish driving force dominates the kinetics. At a low temperature, the driving force is high but diffusion is quite limited. The kinetics of phase transformation are most rapid at a compromise intermediate temperature, resulting in the characteristic C-curve shape. The portion of the C that extends farthest to the left is known as the *nose* of the T-T-T or I-T diagram.

If the transformation occurs between the A_1 temperature and the nose of the curve, the departure from equilibrium is not very great. The austenite transforms into alternating layers of ferrite and cementite, producing the *pearlite* structure that was introduced with the equilibrium phase diagram description in Chapter 4. Since the diffusion rate is greater at higher temperatures, pearlite produced under those conditions has a larger lamellar spacing (separation distance between similar layers). The pearlite formed near the A_1 temperature is known as *coarse pearlite*, while the closer-spaced structures formed near the nose are called *fine pearlite*. Since the resulting structures and properties are similar to those of the near-equilibrium process heat treatments, the procedure just described is called an *isothermal anneal*.

If the austenite is quenched to a temperature between the nose and the temperature designated as M_s, a different structure is produced. These transformation conditions are a significant departure from equilibrium, and the amount of diffusion required to form the continuous layers within pearlite is no longer available. The metal still has the goal of changing crystal structure from face-centered austenite to body-centered ferrite, with the excess carbon being accommodated in the form of cementite. The resulting structure, however, does not contain cementite layers but rather a dispersion of discrete cementite particles dispersed throughout a matrix of ferrite. Electron microscopy may be required to resolve the carbides in this structure, which is known as *bainite*. Because of the fine dispersion of carbide, it is stronger than fine pearlite, and ductility is retained because the soft ferrite is the continuous matrix.

If austenite is quenched to a temperature below the M_s line, a different type of transformation occurs. The steel still wants to change its crystal structure from face-centered cubic to body-centered cubic, but it can no longer expel the amount of carbon necessary to form ferrite. Responding to the severe nonequilibrium conditions, it simply undergoes an abrupt change in crystal structure with no significant movement of carbon. The excess carbon becomes trapped, distorting the structure into a body-centered tetragonal crystal lattice (distorted body-centered cubic), with the amount of distortion being proportional to the amount of excess carbon. The new structure, shown in Figure 5-8, is known as *martensite*, and, with sufficient carbon, it is exceptionally strong, hard, and brittle. The highly distorted lattice effectively blocks the dislocation motion that is necessary for metal deformation.

As shown in Figure 5-9, the hardness and strength of steel with the martensitic structure are strong functions of the carbon content. Below 0.10% carbon, martensite is not very strong. Since no diffusion occurs during the transformation, higher-carbon steels form higher-carbon martensite, with an increase in strength and hardness and a concurrent decrease in toughness and ductility. From 0.3 to 0.7% carbon, strength and hardness increase rapidly. Above 0.7% carbon, however, the rise is far less dramatic and

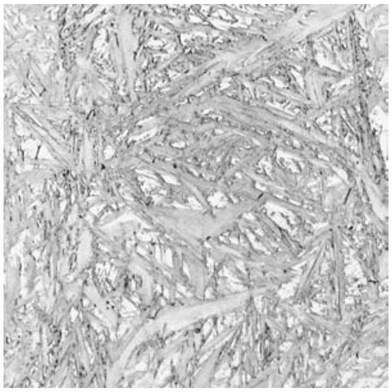

FIGURE 5-8 Photomicrograph of martensite; 1000X. *(Courtesy of United States Steel Corp., Pittsburgh, PA.)*

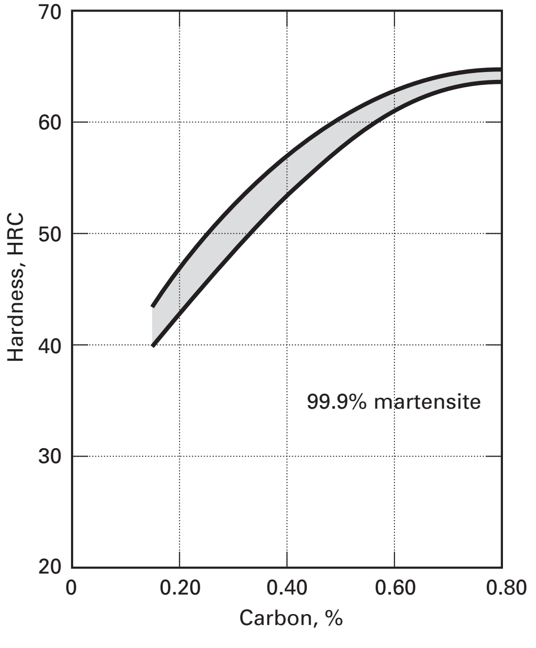

FIGURE 5-9 Effect of carbon on the hardness of martensite.

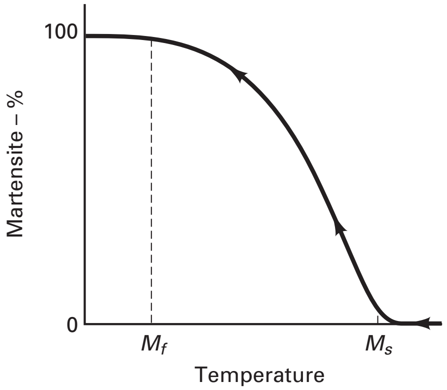

FIGURE 5-10 Schematic representation depicting the amount of martensite formed upon quenching to various temperatures from M_s through M_f.

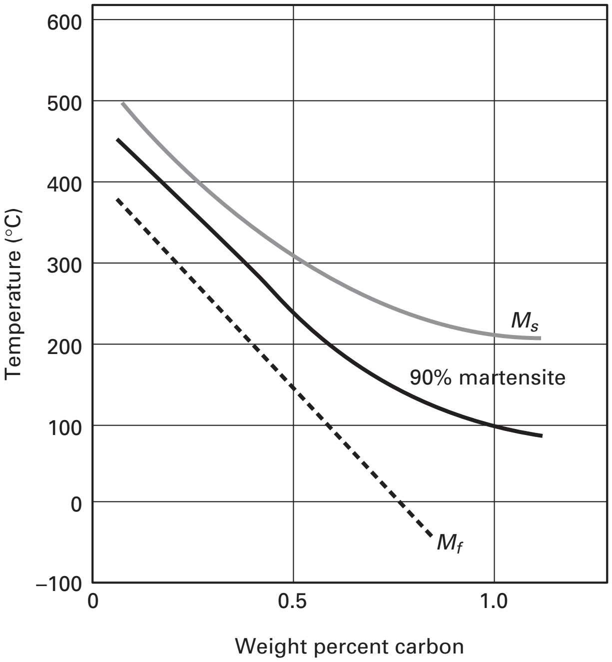

FIGURE 5-11 Variation of M_s and M_f temperatures with carbon content. Note that for high-carbon steels, completion of the martensite transformation requires cooling to below room temperature.

may actually be a decline, a feature related to the presence of retained austenite (to be described below).

Unlike the other structure transformations, the *amount* of martensite that forms is not a function of time, but rather depends only on the lowest temperature that is encountered during the quench. This feature is shown in Figure 5-10, where the amount of martensite is recorded as a function of temperature. Returning to the C curve of Figure 5-7, there is a temperature designated as M_{50}, where the structure is 50% martensite and 50% untransformed austenite. At the lower M_{90} temperature, the structure has become 90% martensite. If no further cooling were to occur, the untransformed austenite could remain within the structure. This *retained austenite* can cause loss of strength or hardness, dimensional instability, and cracking or brittleness. Since many quenches are to room temperature, retained austenite becomes a significant problem when the martensite finish, or 100% martensite, temperature lies below room temperature. Figure 5-11 presents the martensite start and martensite finish temperatures for a range of carbon contents. Higher carbon contents, as well as most alloy additions, decrease all martensite-related temperatures, and materials with these chemistries may require refrigeration or a quench in dry ice or liquid nitrogen to produce full hardness.

It is important to note that all of the transformations that occur below the A_1 temperature are one-way transitions (austenite to something). The steel is simply seeking to change its crystal structure, and the various products are the result of this change. It is impossible, therefore, to convert one transformation product to another without first reheating to above the A_1 temperature to again form the face-centered-cubic austenite.

T-T-T diagrams can be quite useful in determining the kinetics of transformation and the nature of the products. The left-hand curve shows the elapsed time (at constant temperature) before the transformation begins, and the right-hand curve shows the time required to complete the transformation. If hypo- or hypereutectoid steels were considered, additional regions would have to be added to the diagram to incorporate the primary equilibrium phases that form below the A_3 or A_{cm} temperatures. These regions would not extend below the nose, however, since the nonequilibrium bainite and martensite structures can exist with variable amounts of carbon, unlike the near-equilibrium pearlite. Figure 5-12 shows the T-T-T curve for a 0.5%-carbon hypoeutectoid steel, showing the additional region for the primary ferrite.

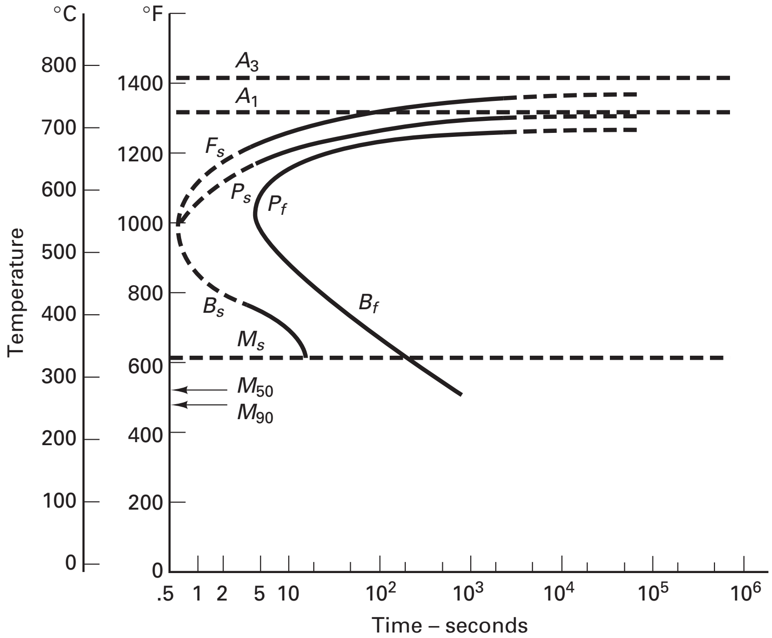

FIGURE 5-12 Isothermal-transformation diagram for a hypoeutectoid steel (1050) showing the additional region for primary ferrite.

TEMPERING OF MARTENSITE

Despite its great strength, medium- or high-carbon martensite in its as-quenched form lacks sufficient toughness and ductility to be a useful engineering structure. A subsequent heating, known as *tempering*, is usually required to impart the necessary ductility and fracture resistance, and relax undesirable residual stresses. As with most property-changing processes, there is a concurrent drop in other features, most notably strength and hardness.

Martensite is a supersaturated solid solution of carbon in alpha-ferrite and, therefore, is a metastable structure. When heated into the range of 100° to 700°C (200° to 1300°F), the excess carbon atoms are rejected from solution, and the structure moves toward a mixture of the stable phases of ferrite and cementite. This decomposition of martensite into ferrite and cementite is a time- and temperature-dependent, diffusion-controlled phenomenon with a continuous spectrum of intermediate and transitory structures.

Table 5-1 presents a chart-type comparison of the previously discussed precipitation-hardening process and the austenitize-quench-and-temper sequence. Both are non-equilibrium heat treatments that involve three distinct stages. In both, the first step is an elevated temperature soaking designed to erase the prior structure, redissolving material to produce a uniform-chemistry, single-phase starting condition. Both treatments follow this soak with a rapid-cool quench. In precipitation hardening, the purpose of the quench is to prevent nucleation of the second phase, thereby producing a supersaturated solid solution. This material is usually soft, weak, and ductile, with good toughness. Subsequent aging (reheating within the temperatures of the stable two-phase region) allows the material to move toward the formation of the stable two-phase structure and sacrifices toughness and ductility for an increase in strength. When the proper balance is achieved, the temperature is dropped, diffusion ceases, and the current structure and properties are preserved, provided that the material is never subsequently exposed to any elevated temperature that would reactivate diffusion and permit the structure to move further toward equilibrium.

For steels, the quench induces a phase transformation as the material changes from the face-centered-cubic austenite to the distorted body-centered structure known as martensite. The quench product is again a supersaturated, single-phase solid solution, this time of carbon in iron, but the associated properties are the reverse of precipitation hardening. Martensite is strong and hard but relatively brittle. When the material is

TABLE 5-1 Comparison of Age Hardening with the Quench-and-Temper Process

Heat Treatment	Step 1	Step 2	Step 3
Age hardening	*Solution treatment.* Heat into the stable single-phase region (above the solvus) and hold to form a uniform-chemistry single-phase solid solution.	*Quench.* Rapid cool to form a nonequilibrium supersaturated single-phase solid solution (crystal structure remains unchanged, material is soft and ductile).	*Age.* A controlled reheat in the stable two-phase region (below the solvus). The material moves toward the formation of the stable two-phase structure, becoming stronger and harder. The properties can be "frozen in" by dropping the temperature to stop further diffusion.
Quench and temper for steel	*Austenitize.* Heat into the stable single-phase region (above the A_3 or A_{cm}) and hold to form a uniform-chemistry single-phase solid solution (austenite).	*Quench.* Rapid cool to form a nonequilibrium supersaturated single-phase solid solution (crystal structure changes to body-centered martensite, which is hard but brittle).	*Temper.* A controlled reheat in the stable two-phase region (below the A_1). The material moves toward the formation of the stable two-phase structure, becoming weaker but tougher. The properties can be "frozen in" by dropping the temperature to stop further diffusion.

tempered (reheated to a temperature within the stable two-phase region), strength and hardness are sacrificed for an increase in ductility and toughness. Figure 5-13 shows the final properties of a steel that has been tempered at a variety of temperatures. During tempering, diffusion enables movement *toward* the stable two-phase structure, and a drop in temperature can again halt diffusion and lock in properties. By quenching steel to form martensite and then tempering it at various temperatures, an infinite range of structures and corresponding properties can be produced. This procedure is known as the *quench-and-temper process* and the product, which offers an outstanding combination of strength and toughness, is called *tempered martensite*.

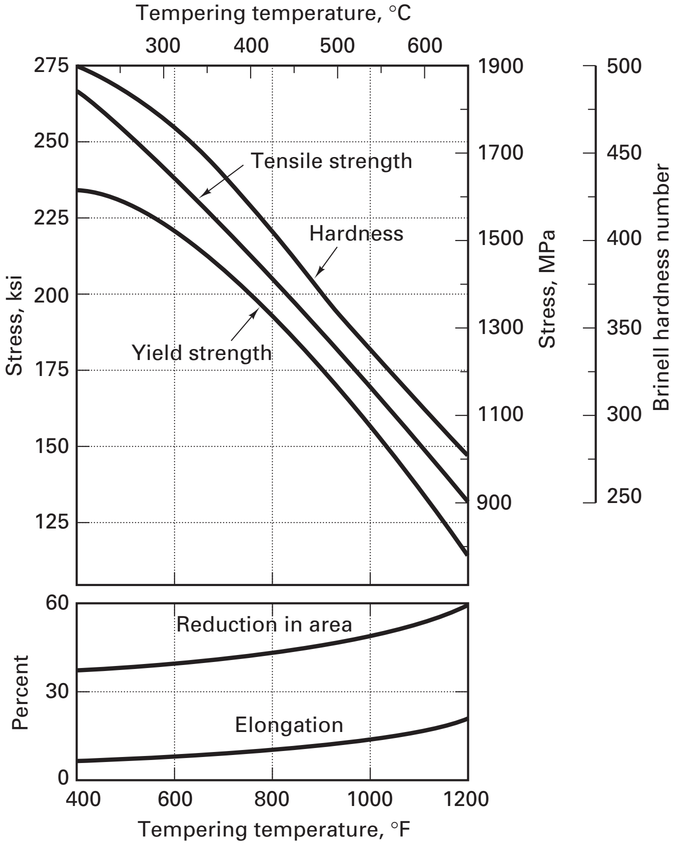

FIGURE 5-13 Properties of an AISI 4140 steel that has been austenitized, oil-quenched, and tempered at various temperatures. (Adapted from Engineering Properties of Steel, *ASM International, Materials Park, OH., 1982.)*

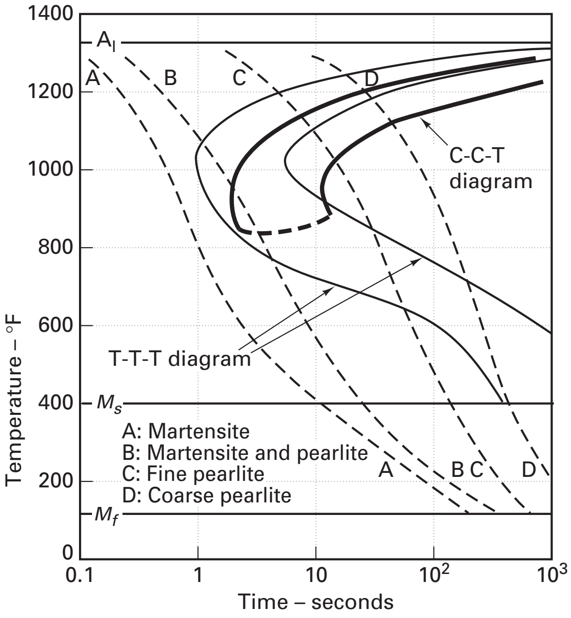

FIGURE 5-14 C-C-T diagram for a eutectoid composition steel (bold), with several superimposed cooling curves and the resultant structures. The lighter curves are the T-T-T transitions for the same steel. *(Courtesy of United States Steel Corp., Pittsburgh, PA.)*

CONTINUOUS COOLING TRANSFORMATIONS

While the T-T-T diagrams provide considerable information about the structures obtained through nonequilibrium thermal processing, the assumptions of instantaneous cooling followed by constant temperature transformation rarely match reality. Actual parts generally experience continuous cooling from elevated temperature, and a diagram showing the results of this type of cooling at various rates would be far more useful. What would be the result if the temperature were to be decreased at a rate of 500°F per second, 50°F per second, or 5°F per second?

A *continuous-cooling-transformation* (C-C-T) *diagram*, like the one shown in Figure 5-14, can provide answers to these questions and numerous others. If the cooling is sufficiently fast (dashed curve A), the structure will be martensite. The slowest cooling rate that will produce a fully martensitic structure is referred to as the *critical cooling rate*. Slow cooling (curve D) generally produces coarse pearlite along with a possible primary phase. Intermediate rates usually result in mixed structures, since the time at any one temperature is usually insufficient to complete the transformation. If each structure is regarded as providing a companion set of properties, the wide range of possibilities obtainable through the controlled heating and cooling of steel becomes even more evident.

JOMINY TEST FOR HARDENABILITY

The C-C-T diagram shows that different cooling rates produce different structures with different associated properties. Since the C-C-T diagram will change with material chemistry, we have a general relation of the form:

$$\text{material} + \text{cooling rate} \longrightarrow \text{structure} \longrightarrow \text{properties}$$

For a given material, its C-C-T diagram provides the link between cooling rate and structure. Engineers who focus on use and application, however, are often more interested in material properties and how they may be achieved. The *Jominy end-quench hardenability test*[2] and associated diagrams provide a useful tool and expand our understanding of nonequilibrium heat treatment. In this test, depicted schematically in Figure 5-15, an entire spectrum of cooling rates are produced on a single four-inch-long specimen by quenching a heated (i.e., austenitized) cylindrical bar from one end. The quench is standardized by specifying the quench medium (water at 75°F), the internal nozzle diameter ($\frac{1}{2}$ inch), the

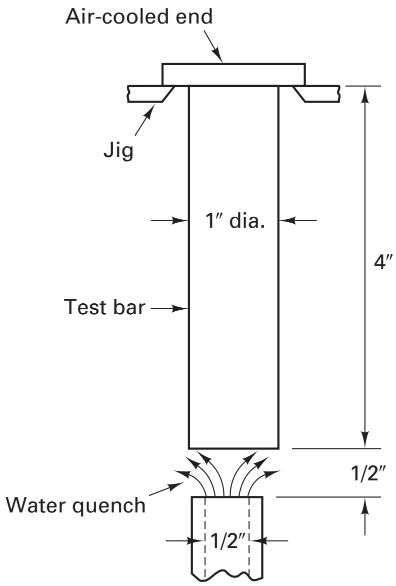

FIGURE 5-15 Schematic diagram of the Jominy hardenability test.

---

[2] This test is described in detail in the following standards: ASTM A255, SAE J406, DIN 50191, and ISO 642.

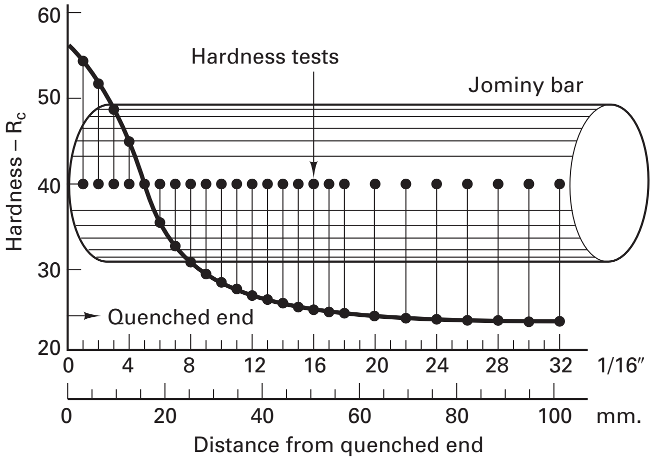

FIGURE 5-16 Typical hardness distribution along a Jominy test specimen.

water pressure (that producing a $2\frac{1}{2}$-inch vertical fountain), and the gap between the nozzle and the specimen ($\frac{1}{2}$ inch). Since none of the water contacts the side of the specimen, all cooling is directional along the axis of the bar. One end sees rapid cooling, while the other is essentially air-cooled. Since the thermal conductivity of steel does not change over the normal ranges of carbon and alloy additions, a characteristic cooling rate can be assigned to each location along the length of the standard-geometry specimen.

After the test bar has cooled to room temperature, a flat region is ground along opposite sides and Rockwell C hardness readings are taken every $\frac{1}{16}$ inch along the bar. The resulting data are then plotted as shown in Figure 5-16. The hardness values are correlated with position, and since the cooling rate is known for each location within the bar, the hardnesses are indirectly correlated with the cooling rate that produced them. Since hardness is also an indicator of strength, we have experimentally linked cooling rate to resultant strength in a simple and efficient manner.

For any given material, application of the test assumes that equivalent cooling conditions will produce equivalent results. If the cooling rate is known for a specific location within a part (from experimentation or theory), the properties at that location can be predicted to be those at the Jominy test bar location with the same cooling rate. Conversely, if specific properties are required, the necessary cooling rate can be determined. Should the cooling rates be restricted by either geometry or processing limitations, various materials can be compared and a satisfactory alloy selected. Figure 5-17 shows the Jominy curves for several engineering steels. Since differences in chemical composition can exist between heats of the same grade of steel, hardenability data are

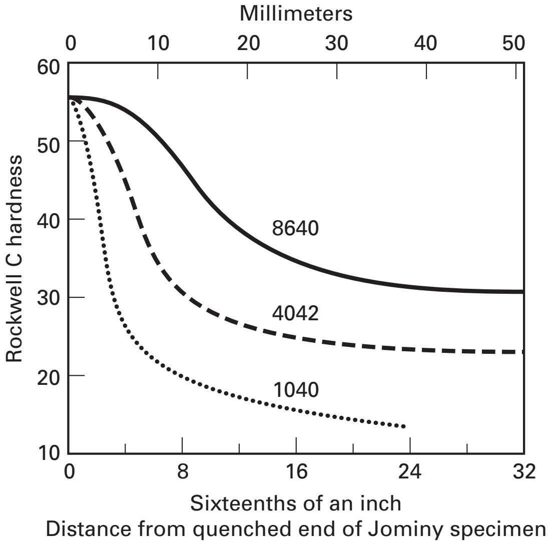

FIGURE 5-17 Jominy hardness curves for engineering steels with the same carbon content but varying types and amounts of alloy elements.

often presented in the form of bands, where the upper curve corresponds to the maximum expected hardness and the lower curve to the minimum. The data for actual heats should then fall between these two extremes.

HARDENABILITY CONSIDERATIONS

Several key effects must be considered if we are to understand the heat treatment of steel: (1) the effect of carbon content, (2) the effect of alloy additions, and (3) the effect of various quenching conditions. The first two relate to the material being treated and the third to the heat-treatment process.

Hardness is a mechanical property related to strength and is a strong function of the carbon content of a steel and the particular microstructure. With different heat treatments, the same steel can have different hardness values. *Hardenability* is a measure of the depth to which full hardness can be obtained under a normal hardening cycle and is related primarily to the amounts and types of alloying elements. Hardenability, therefore, is a material property dependent upon chemical composition. In Figure 5-17, all of the steels have the same carbon content, but they differ in the type and amounts of alloy elements. The maximum hardness is the same in all cases, but the depth of hardening (or the way hardness varies with distance from the quenched end) varies considerably. Figure 5-18 shows Jominy test results for steels containing the same alloying elements but variable amounts of carbon. Note the change in peak hardness as carbon content is increased.

The results of a heat-treat operation depend on both the hardenability of the metal and the rate of heat extraction. The primary reason for adding alloy elements to commercial steels is to increase their hardenability, not to improve their strength. Steels with greater hardenability can achieve a desired level of strength or hardness with slower rates of cooling and, for this reason, can be completely hardened in thicker sections. Slower cooling also serves to reduce the amount of quench-induced distortion and the likelihood of *quench cracking*.

An accurate determination of need is required if steels are to be selected for specific applications. Strength tends to be associated with carbon content, and a general rule is to select the lowest possible level that will meet the specifications. Because heat can be extracted only from the surface of a metal, the size of the piece and the depth of required hardening set the conditions for hardenability and quench. For a given quench condition, different alloys will produce different results. Because alloy additions increase the cost of a material, it is best to select only what is required to ensure compliance with specifications. Money is often wasted by specifying an alloy steel

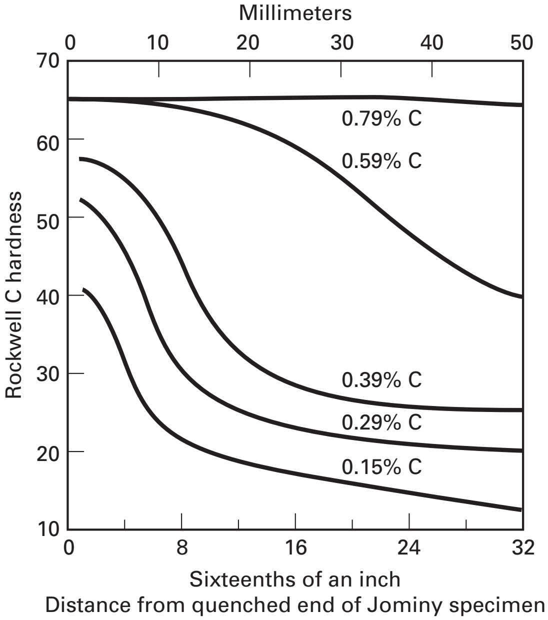

FIGURE 5-18 Jominy hardness curves for engineering steels with identical alloy conditions but variable carbon content.

for an application where a plain-carbon steel, or a steel with lower alloy content (less costly), would be satisfactory. When greater depth of hardness is required, another alternative is to modify the quench conditions so that a faster cooling rate is achieved. Quench changes may be limited, however, by cracking or warping problems as well as other considerations relating to the size, shape, complexity, and desired precision of the part being treated.

QUENCH MEDIA

Quenchants are selected to provide the cooling rates required to produce the desired structure and properties in the size and shape part being treated. Quench media vary in their effectiveness, and one can best understand the variation by considering the three stages of quenching. Let's begin with a piece of hot metal being inserted into a tank of liquid quenchant. If the temperature of the metal is above the boiling point of the quenchant, the liquid adjacent to the metal will vaporize and form a thin gaseous layer between the metal and the liquid. Cooling is slow through this *vapor jacket* (first stage) since the gas has an insulating effect, and heat transfer is largely through radiation. Bubbles soon nucleate, however, and break the jacket. New liquid contacts the hot metal, vaporizes (removing its heat of vaporization from the metal), forms another bubble, and the process continues. Because large quantities of heat are required to vaporize a liquid, this *second stage of quenching* (or nucleate boiling phase) produces rapid rates of cooling down to the boiling point of the quenchant. At this point, vaporization can no longer occur. Heat transfer must now take place by conduction across the solid–liquid interface, aided by convection or stirring within the liquid. In this *third stage of quenching*, the slower cooling by conduction and convection continues from the boiling point to room temperature. Breakdown of the vapor jacket, bubble removal, and convection cooling can all be aided by moving the metal through the liquid or flowing the liquid over the metal surface. Various liquids offer different heats of vaporization, viscosities, and boiling points. Quenches can be further tailored by varying the temperature of the liquid and the degree of flow or agitation.

Water is a fairly effective quenching medium because of its high heat of vaporization and the fact that the second stage of quenching extends down to 100°C (212°F), usually well into the temperatures for martensite formation. Water is also cheap, readily available, easily stored, nontoxic, nonflammable, smokeless, and easy to filter and pump. Agitation is usually recommended with a water quench, however, since the clinging tendency of the bubbles may cause soft spots on the metal. Other problems associated with a water quench include its oxidizing nature (i.e., its corrosiveness) and the tendency to produce excessive distortion and possible cracking.

While *brine* (salt water) has a similar heat of vaporization and boiling point to water, it produces more rapid cooling because the salt nucleates bubbles, forcing a quick transition through the vapor jacket stage. Unfortunately, the salt in a brine quench also tends to accelerate corrosion problems unless all residues are completely removed by a subsequent rinse. Different types of salts can be used, including sodium or potassium hydroxide, and various degrees of agitation or spraying can be used to adjust the effectiveness of the quench. (*Note:* Because of all of the dissolved salts, the urines cited in quenching folklore are actually quite similar to the brines of today.)

If a slower cooling rate is desired, *oil* quenches are often utilized. Various oils are available that have high flash points and different degrees of quenching effectiveness. Since the boiling points can be quite high, the transition to third-stage cooling usually precedes the martensite start temperature. The slower cooling through the M_s-to-M_f martensite transformation leads to a milder temperature gradient within the piece, reduced distortion, and reduced likelihood of cracking. Heating the oil actually increases its cooling ability, since the reduced viscosity assists bubble formation and removal. Problems associated with oil quenchants include water contamination, smoke, fumes, spill and disposal problems, and fire hazard. In addition, quench oils tend to be somewhat expensive.

Quite often, there is a need for a quenchant that will cool more rapidly than the oils but slower than water or brine. To fill this gap, a number of water-based *polymer* *quench* solutions (also called *synthetic quenchants*) have been developed. Tailored quenchants can be produced by varying the concentrations of the components (such as liquid organic polymers, corrosion inhibitors, and water) and adjusting the operating temperature and amount of agitation. The polymer quenchants provide extremely uniform and reproducible results, are less corrosive than water and brine, and are less of a fire hazard than oils (no fires, fumes, smoke, or need for air pollution control apparatus). Distortion and cracking are less of a problem since the boiling point can be adjusted to be above the martensite start temperature. In addition, the polymer-rich film that forms initially on the hot metal part serves to modify the cooling rate.

If slow cooling is required, molten salt baths can be employed to provide a medium where the quench goes directly to the third stage of cooling. Still slower cooling can be obtained by cooling in still air, burying the hot material in sand, or a variety of other methods.

High-pressure gas quenching uses a stream of flowing gas to extract heat, and the cooling rates can be adjusted by controlling the gas velocity and pressure. Results are comparable to oil quenching, with far fewer environmental and safety concerns. From an environmental perspective, *vegetable oils* may also be an attractive quenchant. They are biodegradable, offer low toxicity, and are a renewable resource.

DESIGN CONCERNS, RESIDUAL STRESSES, DISTORTION, AND CRACKING

Product design and material selection play important roles in the satisfactory and economical heat treatment of parts. Proper consideration of these factors usually leads to simpler, more economical, and more reliable products. Failure to relate design and materials to heat-treatment procedures usually produces disappointing or variable results and may lead to a variety of service failures.

From the viewpoint of heat treatment, undesirable design features include (1) nonuniform sections or thicknesses, (2) sharp interior corners, and (3) sharp exterior corners. Since these features often find their way into the design of parts, the designer should be aware of their effect on heat treatment. Undesirable results may include nonuniform structure and properties, undesirable residual stresses, cracking, warping, and dimensional changes.

Heat can only be extracted from a piece through its exposed surfaces. Therefore, if the piece to be hardened has a nonuniform cross section, any thin region will cool rapidly and may fully harden, while thick regions may harden only on the surface, if at all. The shape that might be closest to ideal from the viewpoint of quenching would be a doughnut. The uniform cross section with high exposed surface area and absence of sharp corners would be quite attractive. Since most shapes are designed to perform a function, however, compromises are usually necessary.

Residual stresses are the often-complex stresses that are present within a body, independent of any applied load. They can be induced in a number of ways, but the complex dimensional changes that can occur during heat treatment are a primary cause. Thermal expansion during heating and thermal contraction during cooling are well-understood phenomena, but when these occur in a nonuniform manner, the results can be extremely complex. In addition, the various phases and structures that can exist within a material usually possess different densities. Volume expansions or contractions accompany any phase transformation. For example, when austenite transforms to martensite, there is a volume expansion of up to 4%. Transformations to ferrite, pearlite, or other room-temperature structures also involve volume expansions but of a smaller magnitude.

If all of the temperature changes occurred uniformly throughout a part, all of the associated dimensional changes would occur simultaneously and the resultant product would be free of residual stresses. Most of the parts being heat treated, however, experience nonuniform temperatures during the cooling or quenching operation. Consider a block of hot aluminum being cooled by water sprays from top and bottom. For simplicity, let us model the block as a three-layer sandwich, as in the top sequence of Figure 5-19. At the start of the quench, all layers are uniformly hot. As the water spray begins, the surface layers cool and contract, but the center layer does not experience the quench and remains hot. Since the part is actually one piece, however, the various

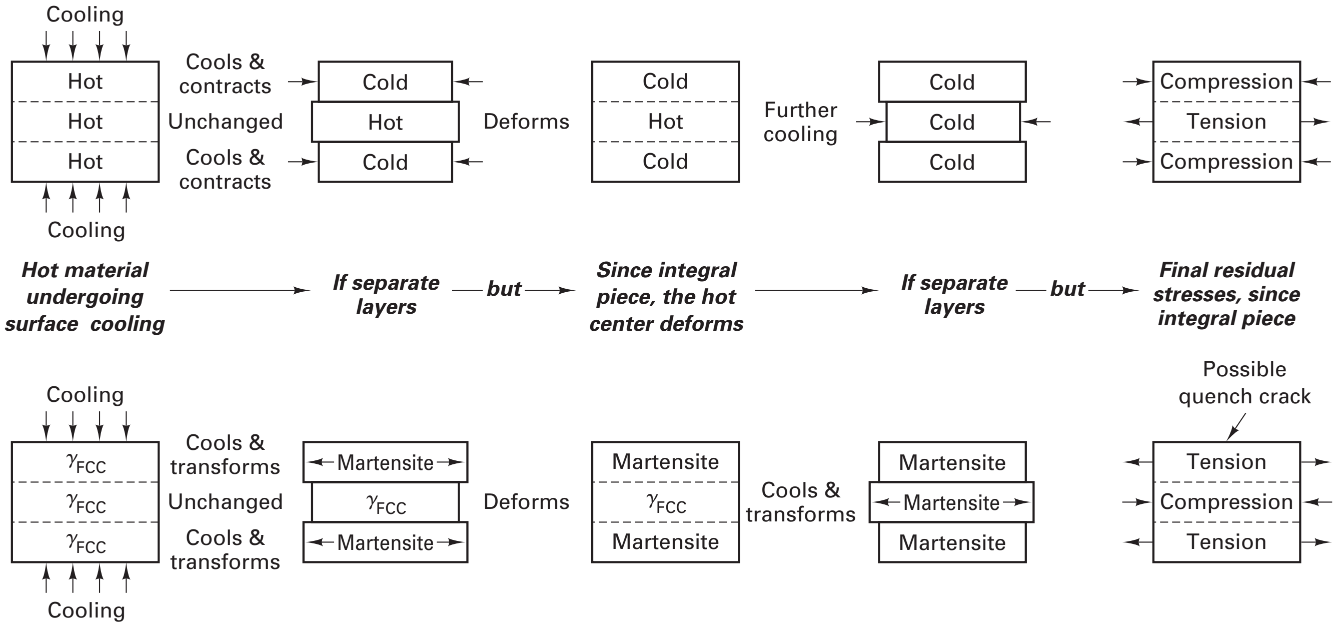

FIGURE 5-19 Three-layer model of a plate undergoing cooling. The upper sequence depicts a material such as aluminum that contracts upon cooling while the bottom sequence depicts steel, which expands during the cooling-induced phase transformation.

layers must accommodate each other. The contracting surface layers exert compressive forces on the hot, weak interior, causing it to also contract,—but by plastic deformation, not thermal contraction. As time passes, the interior now cools and wants to contract but finds itself sandwiched between the cold, strong surface layers. It pulls on the surface layers, placing them in compression, while the surface layers restrict its movement, creating tension in the interior. While the net force is zero (since there is no applied load), counterbalancing tension and compression stresses exist within the product.

Let us now change the material to steel and repeat the sequence. When heated, all three layers are hot, face-centered-cubic austenite, as shown in the bottom sequence of Figure 5-19. Upon quenching, the surface layers transform to martensite (the structure changes to body-centered tetragonal) and *expand*! The expanding surfaces deform the soft, weak, (and still hot) austenite center, which then cools and wants to expand as it undergoes the crystal structure change to martensite or another body-centered, room-temperature product. The hard, strong surface layers hold it back, placing the center in compression, while the expanding center tries to stretch the surface layers, producing surface tension. If the tension at the surface becomes great enough, cracking can result, a phenomenon known as *quench cracking*. One should note that for the rapid-quench conditions just described, aluminum will never quench crack, because the surface is in compression, but the steel might, since the residual stresses are reversed. If the cooling conditions were not symmetrical, there might be more contraction or expansion on one side, and the block might warp. With more complex shapes and the accompanying nonuniform cooling, the residual stresses induced by heat treatment can be extremely complex.

Various techniques can be employed to minimize or reduce the problems associated with residual stresses. If product cross sections can be made more uniform, temperature differences can be minimized and will not be concentrated at any specific location. If this is not possible, slower cooling may be recommended, coupled with a material that will provide the desired properties after a slower oil or air quench. Since materials with greater hardenability are more expensive, design alternatives should generally precede quench modifications.

When temperature differences and the resultant residual stresses become severe or localized, cracking or distortion problems can be expected. Figure 5-20a shows an example where a sharp interior corner has been placed at a change in cross section. Upon quenching, stresses will concentrate along line A–B, and a crack is almost certain

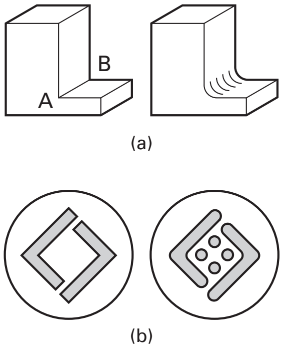

FIGURE 5-20 (a) Shape containing nonuniform sections and a sharp interior corner that may crack during quenching. This is improved by using a large radius to join the sections. (b) Original design containing sharp corner holes, which can be further modified to produce more uniform sections.

to result. If changes in cross section are required, they should be gradual, as in the redesigned version of Figure 5-20a. Generous fillets at interior corners, radiused exterior corners, and smooth transitions all reduce problems. A material with greater hardenability and a less severe quench would also help. Figure 5-20b shows the cross section of a blanking die that consistently cracked during hardening. Rounding the sharp corners and adding additional holes to provide a more uniform cross section during quenching eliminated the problem.

One of the ominous features of poor product and process design is the fact that the residual stresses may not produce immediate failure but may contribute to failure at a later time. Applied stresses add to the residual stresses already present within the part. Therefore, it is possible for applied stresses that are well within the "safe" designed limit to couple with residual stresses and produce a value sufficient to induce failure. Residual stresses can also accelerate corrosion reactions. Dimensional changes or warping can occur when subsequent machining or grinding operations upset the equilibrium balance of the residual stresses. After the removal of some material, the remaining piece adjusts its shape to produce a new (sum of forces equal zero) equilibrium balance. When we consider all of the possible difficulties, it is apparent that considerable time and money can be saved if good design, material selection, and heat-treatment practices are employed.

TECHNIQUES TO REDUCE CRACKING AND DISTORTION

The steel segment of Figure 5-19 has already introduced the phenomena of quench cracking, and Figure 5-21a further illustrates its cause using a T-T-T diagram (a misuse of the diagram, since continuous cooling is employed, but helpful for visualization). The surface and center of a quenched product generally have different cooling rates. As a result, when the surface has cooled and is transforming to martensite with its companion expansion, the center is still hot and remains soft, untransformed austenite. At a later time, the center cools to the martensite transformation, and it expands. The result is significant tension in the cold, hard surface and possible cracking.

Figure 5-21b depicts two variations of rapid quenching that have been developed to produce strong structures while reducing the likelihood of cracking. A rapid cool must still be employed to prevent transformation to the softer, weaker pearlitic structure, but instead of quenching through the martensite transformation, the component is rapidly quenched into a liquid medium that is now several degrees above the martensite start (M_s) temperature, such as hot oil or molten salt. Holding for a period of time in this bath allows the entire piece to return to a nearly uniform temperature.

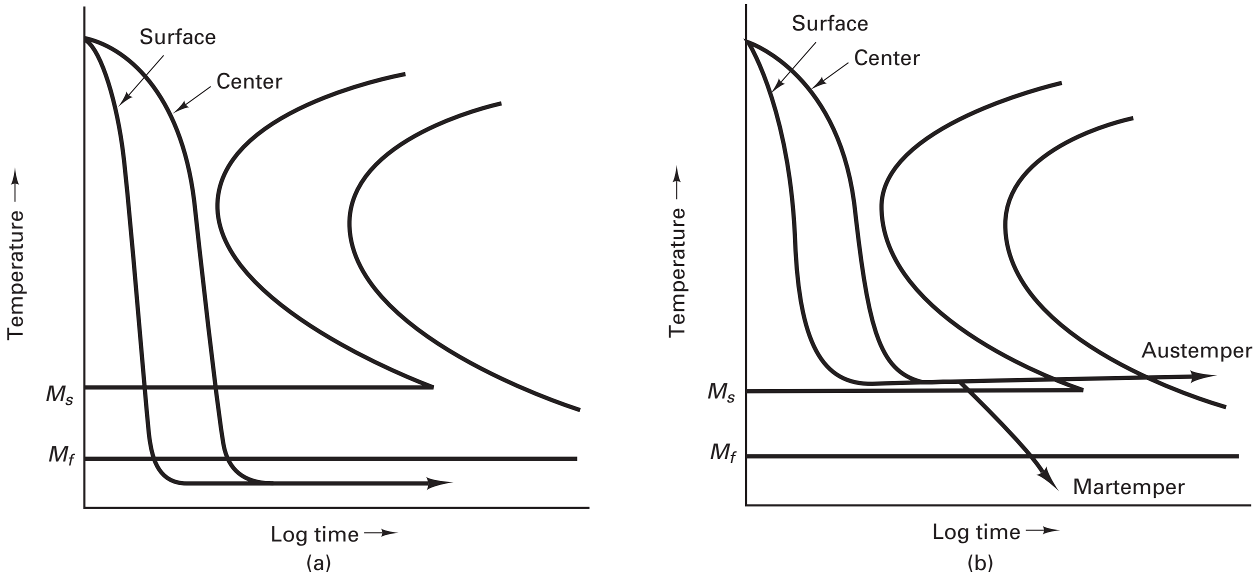

FIGURE 5-21 (a) Schematic representation of the cooling paths of surface and center during a direct quench; (b) The modified cooling paths experienced during the austempering and martempering processes.

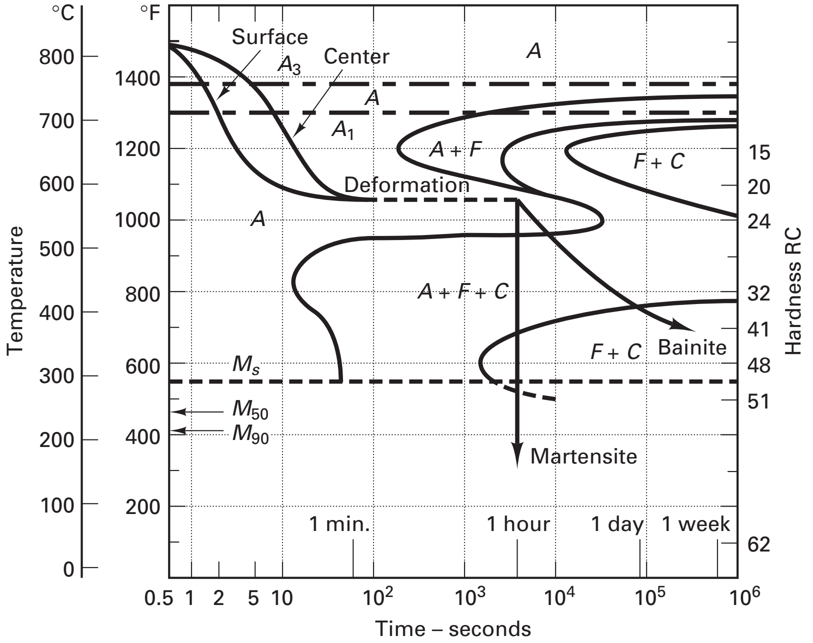

FIGURE 5-22 T-T-T diagram for 4340 steel, showing the "bay," along with a schematic of the ausforming process. *(Courtesy of United States Steel Corp., Pittsburgh, PA.)*

If the material is simply held at this temperature for sufficient time, the austenite will transform to bainite, which usually has sufficient toughness that a subsequent temper is not required. This process is known as *austempering*. If the material is brought to a uniform temperature and then slow cooled through the martensite transformation, the process is known as *martempering*, or *marquenching*. The resulting structure is martensite, which must be tempered the same as the martensite that forms directly upon quenching. In both of these processes, all transformations (and related volume expansions) occur at the same time, thereby eliminating the residual stresses and tendency to crack.

AUSFORMING

A process that is often confused with austempering is *ausforming*. Certain alloys tend to retard the pearlite transformation more than the bainite reaction and produce a T-T-T curve of the shape shown in Figure 5-22. If this material is heated to form austenite and then quenched to the temperature of the "bay" between the pearlite and bainite reactions, it can retain its austenite structure for a useful period of time. Deformation can be performed on an austenite structure at a temperature where it technically should not exist. Benefits include the increased ductility of the face-centered-cubic crystal structure, the finer grain size that forms upon recrystallization at the lower temperature, and the possibility of some degree of strain hardening. Following the deformation, the metal can be slowly cooled to produce bainite or rapidly quenched to martensite, which must then be tempered. The resulting product has exceptional strength and ductility, coupled with good toughness, creep resistance, and fatigue life—properties that are superior to those produced if the deformation and transformation processes are conducted in their normal separated sequence. Ausforming is an example of a growing class of *thermomechanical processes* in which deformation and heat treatment are intimately combined.

5.6 SURFACE HARDENING OF STEEL

Many products require different properties at different locations. Quite frequently, this variation takes the form of a hard, wear-resistant surface coupled with a tough, fracture-resistant core. The methods developed to produce the varied properties can be classified into three basic groups: (1) selective heating of the surface, (2) altered surface chemistry, and (3) deposition of an additional surface layer. The first two approaches will be discussed in the next sections, while platings and coatings will be described in Chapter 36.

SELECTIVE HEATING TECHNIQUES

If a steel has sufficient carbon to attain the desired surface hardness, generally greater than 0.3%, the different properties can often be obtained simply by varying the thermal histories of the various regions. Core properties are set by a bulk treatment, with the surface properties being established by a subsequent surface treatment. Maximum hardness depends on the carbon content of the material, while the depth of that hardness depends on both the depth of heating and the material's hardenability. The various methods generally differ in the way the surface is brought to elevated temperature.

Flame hardening uses an oxy-acetylene flame to raise the surface temperature high enough to reform austenite. The surface is then water quenched[3] to produce martensite and tempered to the desired level of toughness. Heat input is quite rapid, leaving the interior at low temperature and free from any significant change. Considerable flexibility is provided since the rate and depth of heating can be easily varied. Depth of hardening can range from thin skins to over 6 mm. ($\frac{1}{4}$ inch). Flame hardening is often used on large objects, since alternative methods tend to be limited by both size and shape. Equipment varies from crude handheld torches to fully automated and computerized units.

When using *induction hardening*, the steel part is placed inside a conductor coil, which is then energized with alternating current. The changing magnetic field induces surface currents in the steel, which heat by electrical resistance. The heating rates can be extremely rapid, and energy efficiency is high. Rapid cooling is then provided by either an immersion quench or water spray using a quench ring that follows the induction coil.

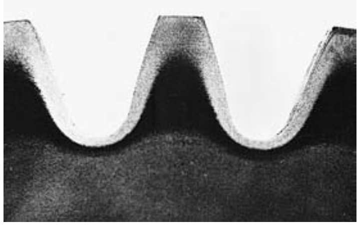

FIGURE 5-23 Section of gear teeth showing induction-hardened surfaces. *(Courtesy of Ajax Tocco Magnathermic Corp., Warren, OH.)*

Induction heating is particularly well suited to surface hardening since the rate and depth of heating can be controlled directly through the amperage and frequency of the generator. Induction hardening is ideal for round bars and cylindrical parts but can also be adapted to more complex geometries. The process offers high quality, good reproducibility, and the possibility of automation. Figure 5-23 shows a partial cross section of an induction-hardened gear, where hardening has been applied to those areas expected to see high wear. Distortion during hardening is negligible since the dark areas remain cool and rigid throughout the entire process.

Laser-beam hardening has been used to produce hardened surfaces on a wide variety of geometries. An absorptive coating such as zinc or manganese phosphate is often applied to the steel to improve the efficiency of converting light energy into heat. The surface is then scanned with the laser, where beam size, beam intensity, and scanning speed have been selected to obtain the desired amount of heat input and depth of heating. Because of the localized heating of the beam, it is possible for the process to be *autoquenching* (cooled simply by conductive transfer into the underlying metal), but a water or oil quench can also be used. Through laser-beam hardening, a 0.4% carbon steel can attain surface hardnesses as high as Rockwell C 65. Typical depth of hardening is between 0.5 and 1 mm (0.02 to 0.04 inches). The process operates at high speeds, produces little distortion, induces residual compressive stresses on the surface, and can be used to harden selected surface areas while leaving the remaining surfaces unaffected. Computer software and automation can be used to control the process parameters, and conventional mirrors and optics can be used to shape and manipulate the beam.

Electron-beam hardening is similar to laser-beam hardening. Here the heat source is a beam of high-energy electrons rather than a beam of light, with the charged particles being focused and directed by electromagnetic controls. Like laser-beam treating, the process can be readily automated, and production equipment can perform a variety of operations with efficiencies often greater than 90%. Electrons cannot travel in air, however, so the entire operation must be performed in a hard vacuum, which is the major limitation of this process. More information on laser- and electron-beam techniques, as well as other means of heating material, is provided in Chapters 31 through 34.

---

[3] There is no real danger of surface cracking during the water quench. When the surface is reaustenitized, the soft austenite adjusts to the colder, stronger underlying material. Upon quenching, the surface austenite expands during transformation. The interior is still cold and restrains the expansion, producing a surface in compression with no tendency toward cracking. This is just the opposite of the conditions that occur during the through-hardening of a furnace-soaked workpiece!

Still other surface-heating techniques employ immersion in a pool of molten lead or molten salt (*lead pot* or *salt bath* heating). These processes are attractive for treating complex-shaped products and hardening relatively inaccessible surfaces.

TECHNIQUES INVOLVING ALTERED SURFACE CHEMISTRY

If the steels contain insufficient carbon to achieve the desired surface properties, or the difference in surface and interior properties is too great for a single chemistry material, an alternative approach is to alter the surface chemistry. The most common technique within this category, *carburizing*, involves the diffusion of carbon into the elevated-temperature, face-centered-cubic, austenite structure, at temperatures between 800° and 1050°C (1450° and 1950°F). When sufficient carbon has diffused to the desired depth, the parts are then thermally processed. Direct quenching from the carburization treatment is the simplest alternative, and the different carbon contents and cooling rates can often produce the desired variation in properties. Alternative processes include a slow cool from the high-temperature carburizing treatment, followed by a lower-temperature reaustenitizing and quenching, or a duplex process involving a bulk treatment and a separate surface heat treatment. These latter processes are more involved and more costly but produce improved product properties. The carbon content of the surface usually varies from 0.7 to 1.2% depending on the material, the process, and the desired results. Case depth may range from a few thousandths of an inch to over $\frac{3}{8}$ inch.

The various carburizing processes differ in the source of the carbon. The most common is *gas carburizing*, where a hot, carbon-containing gas surrounds the parts. The process is fast, is easily controlled, and produces accurate and uniformly modified surfaces. In *pack-carburizing*, the steel components are surrounded by a high-carbon solid material (such as carbon powder, charcoal, or cast iron turnings) and heated in a furnace. The hot carburizing compound produces CO gas, which reacts with the metal, releasing carbon, which is readily absorbed by the hot austenite. A molten bath supplies the carbon in *liquid carburizing.* At one time, liquid-carburizing baths contained cyanide, which supplied both carbon and nitrogen to the surface. Safety and environmental concerns now dictate the use of non-cyanide liquid compounds that are generally used to produce thin cases on small parts.

Nitriding hardens the surface by producing alloy nitrides in special steels that contain nitride-forming elements like aluminum, chromium, molybdenum, or vanadium. The parts are first heat treated and tempered at 525° to 675°C (1000° to 1250°F). After cleaning and removal of any decarburized surface material, they are heated in an atmosphere containing dissociated ammonia (nitrogen and hydrogen) for 10 to 40 hours at 500° to 625°C (950° to 1150°F). Since the temperatures are below the A_1 temperature, the nitrogen is diffusing into ferrite, not austenite, and subsequent cooling will not induce a phase transformation. The diffused nitrogen forms alloy nitrides, hardening the metal to a depth of about 0.65 mm (0.025 in.). Extremely hard cases are formed and distortion is low. No subsequent thermal processing is required. In fact, subsequent heating should be avoided because the thermal expansions and contractions will crack the hard nitrided case. Finish grinding should also be avoided because the nitrided layer is exceptionally thin.

Ionitriding is a plasma process that has emerged as an attractive alternative to the conventional method of nitriding. Parts to be treated are placed in an evacuated "furnace" and a direct current potential of 500 to 1000 volts is applied between the parts and the furnace walls. Low-pressure nitrogen gas is introduced into the chamber and becomes ionized. The ions are accelerated toward the negatively charged product surface, where they impact and generate sufficient heat to promote inward diffusion. This is the only heat associated with the process; the "furnace" acts only as a vacuum container and electrode. Advantages of the process include shorter cycle times, reduced consumption of gases, significantly reduced energy costs, and reduced space requirements. Product quality is improved over that of conventional nitriding, and the process is applicable to a wider range of materials. *Ion carburizing* is a parallel process in which low-pressure methane is substituted for the low-pressure nitrogen, and carbon diffuses into the surface.

Carbon and nitrogen can be added simultaneously. If ammonia is added to a standard carburizing atmosphere, and the steel is heated to a temperature where the structure is austenite, the process becomes one of *carbonitriding*. The temperature is usually lower than for standard carburizing, and the treatment time is somewhat shorter. If CO_2 is added to the ammonia of nitriding and the process is carried out at a temperature below the A_1, the process is known as *nitrocarburizing*. The resulting surface resists scuffing, and fatigue resistance is improved.

Ion plating and *ion implantation* are other technologies that permit modification of the surface chemistry. In Chapter 35 we will expand on the surface treatment of materials and compare the processes discussed in the preceding sections to various platings, coatings, and other techniques.

5.7 FURNACES

FURNACE TYPES AND FURNACE ATMOSPHERES

To facilitate production heat treatment, many styles of furnaces have been developed in a wide range of sizes, each having its characteristic advantages and disadvantages. These furnaces are generally classified as batch or continuous type. *Batch furnaces*, in which the workpiece remains stationary throughout its treatment, are preferred for large parts or small lots of a particular part or grade of steel. *Continuous furnaces* move the components through the heat-treatment operation at rates selected to be compatible with the other manufacturing operations. Continuous furnaces are used for large production runs where the same or similar parts undergo the same thermal processing. The workpieces are moved through the furnace by some type of transfer mechanism (conveyor belt, walking beam, pusher, roller, or monorail) and often fall into a quench tank to complete the treatment. By incorporating various zones, complex cycles of heating, holding, and quenching/cooling can be conducted in an exact and repeatable manner with low labor cost.

Horizontal batch furnaces, often called *box furnaces* because of their overall shape, generally use gas or electricity as their source of heat. As shown in Figure 5-24, a door is provided on one end to allow the work to be inserted and removed. When large or very long workpieces are to be heated, a *car-bottom box furnace* may be employed, like the one shown in Figure 5-25. Here the work is loaded onto a refractory-topped flatcar, which can be rolled into and out of the furnace on railway rails.

In a *bell furnace*, the heating elements are contained within a bottomless "bell" that is lowered over the work. An airtight inner shell is often placed over the workpieces to

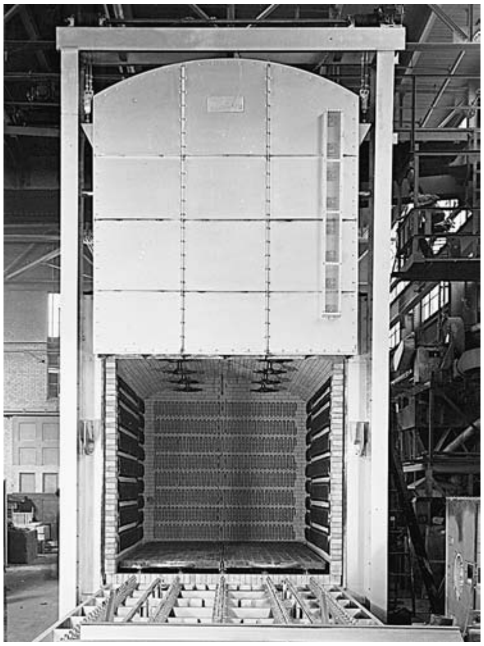

FIGURE 5-24 Box-type electric heat-treating furnace. *(Courtesy of Lindberg, a Division of TPS/SPX, Watsontown, PA.)*

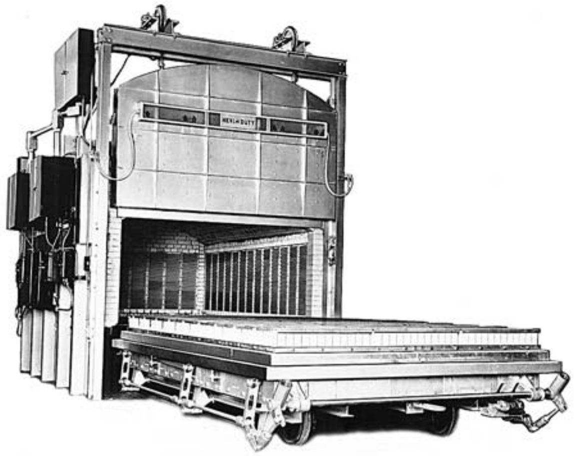

FIGURE 5-25 Car-bottom box furnace. *(Courtesy of Sola/Hevi-Duty, Rosemont, IL.)*

contain a protective atmosphere during the heating and cooling operations. After the work is heated, the furnace unit can be lifted off and transferred to another batch, while the inner shell maintains a protective atmosphere during cooling. If extremely slow cooling is desired, an insulated cover can be placed over the heated shell. An interesting modification of the bell design is the *elevator furnace*, where the bell remains stationary and the workpieces are raised into it on a movable platform that then forms the bottom of the furnace. By placing a quench tank below the furnace, this design enables the workpieces to first be raised into the furnace and then lowered into the quench tank. It is extremely attractive for applications where the work must be quenched as soon as possible after being removed from the heat.

When long, slender parts are positioned horizontally, there is little resistance to sagging or warping. For these types of workpieces, a *vertical pit furnace* is preferred. These furnaces are usually cylindrical chambers sunk into the floor with a door on top that can be swung aside to allow suspended workpieces to be lowered into the furnace. They can also be used to heat large quantities of small parts by loading them into wire-mesh baskets that are then stacked within the column.

While all of the furnaces that have been described can heat in air, most commercial furnaces can also employ *artificial gas atmospheres*. These are selected to prevent scaling or tarnishing, to prevent decarburization, or even to provide carbon or nitrogen for surface modification. Many of the artificial atmospheres are generated from either the combustion or decomposition of natural gas, but nitrogen-based atmospheres frequently offer reduced cost, energy savings, increased safety, and environmental attractiveness. Other common atmospheres include argon, dissociated ammonia, dry hydrogen, helium, steam, and vacuum.

The heating rates of gas atmosphere furnaces can be significantly increased by incorporating the *fluidized-bed* concept. These furnaces consist of a bed of dry, inert particles, such as aluminum oxide (a ceramic), which are heated and fluidized (suspended) in a stream of upward-flowing gas. Products introduced into the bed become engulfed in the particles, which then radiate uniform heat. Temperature and atmosphere can be altered quickly, and high heat-transfer rates, high thermal efficiency, and low fuel consumption have been observed. Since atmosphere changes can be performed in minutes, a single furnace can be used for nitriding, stress relieving, carburizing, carbonitriding, annealing, and hardening.

When a liquid heating medium is preferred, *salt bath furnaces* are a popular choice. Electrically conductive salt can be heated by passing a current between two electrodes suspended in the bath. The electrical currents also cause the bath to circulate and thereby maintain uniform temperature. Nonconductive salts can be heated by some form of immersion heater, or the containment vessels can be externally fired. In these furnaces, the molten salt not only serves as a uniform source of heat but also can be selected to prevent scaling or decarburization. A *lead pot* is a similar device, where molten lead replaces salt as the heat-transfer medium.

Electrical induction heating is another popular means of heating conductive materials, such as metal. Small parts can be through-heated and hardened. Long products can be heated and quenched in a continuous manner by passing them through a stationary heating coil or by having a moving coil traverse a stationary part. Localized or selective heating can also be performed at rapid production rates. Flexibility is another attractive feature, since a standard induction unit can be adapted to a wide variety of products simply by changing the induction coil and adjusting the equipment settings.

FURNACE CONTROL

All heat-treatment operations should be conducted with rigid control if the desired results are to be obtained in a consistent fashion. Most furnaces are equipped with one or more temperature sensors, which can be coupled to a controller or computer to regulate the temperature and the rate of heating or cooling. It should be remembered, however, that it is the temperature of the workpiece, not the temperature of the furnace, that controls the result, and it is this temperature that should be monitored.

5.8 HEAT TREATMENT AND ENERGY

Because of the elevated temperatures and the time required at those temperatures, heat treatments can consume considerable amounts of energy. However, if one considers the broader picture, heat treatment may actually prove to be an energy conservation measure. The manufacture of higher-quality, more durable products can often eliminate the need for frequent replacements. Higher strengths may also permit the use of less material in the manufacture of a product, thereby saving additional energy.

Further savings can often be obtained by integrating the manufacturing operations. For example, a direct quench and temper from hot forging may be used to replace the conventional sequence of forge, conventional air cool, reheat, quench, and temper. One should note, however, that the integrated procedure quenches from the conditions of forging, which generally have greater variability in temperature, uniformity of that temperature, and austenite grain size. If these variations are too great, the additional energy for the reheat and soak may be well justified.

Heat treatment, a business worth \$15–20 billion a year in the United States, impacts nearly every industrial market sector. It is both capital intensive (specialized and dedicated equipment) and energy intensive. Industry goals currently include reducing energy consumption, reducing processing times, reducing emissions, increasing furnace life, improving heat transfer during heating and cooling, reducing distortion, and improving uniformity of structure and properties, both within a given part and throughout an entire production quantity.

Key Words

A_1
A_3
A_{cm}
age hardening
aging
annealing
artificial aging
artificial gas atmospheres
ausforming
austempering
autoquenching
bainite
batch furnaces
C-C-T diagram
carburizing
coherency
continuous furnaces
critical cooling rate
dispersion hardening
electron-beam hardening
equilibrium phase diagram
flame hardening
fluidized-bed furnaces
full anneal
grain size refinement
hardenability
hardness
heat treatment
homogenization
induction hardening
interstitial solution
ionitriding
isothermal anneal
isothermal-transformation diagram
Jominy test
laser-beam hardening
martempering
martensite
natural aging
nitriding
normalize
overaged
pearlite
phase transformation strengthening
polymer quench
precipitation hardening
process anneal
processing heat treatments
quench and temper
quench cracking
quenchant
quenching
recrystallization
residual stresses
retained austenite
solid-solution strengthening
solution treatment
spheroidization
strain hardening
stress-relief anneal
substitutional solution
surface hardening
synthetic quenchant
T-T-T diagram
tempered martensite
tempering
thermomechanical processing
vapor jacket

Review Questions

1. What is heat treatment?
2. What types of properties can be altered through heat treatment?
3. Why should people performing hot forming or welding be aware of the effects of heat treatment?
4. What is the broad goal of the processing heat treatments? Cite some of the specific objectives that may be sought.
5. Why might equilibrium phase diagrams be useful aids in designing and understanding the processing heat treatments?
6. What are the A_1, A_3, and A_{cm} lines?
7. What are some possible objectives of annealing operations?
8. While full anneals often produce the softest and most ductile structures, what may be some of the objections or undesirable features of these treatments?
9. Why are the hypereutectoid steels not furnace cooled from the all-austenite region?
10. What is the major process difference between full annealing and normalizing?
11. While normalizing is less expensive than a full anneal, some manufacturers cite cost saving through the use of a full anneal. How is this achieved?
12. What are some of the process heat treatments that can be performed without reaustenitizing the material (heating above the A_1 temperature)?
13. What types of steel would be candidates for a process anneal? Spheroidization?

14. How might steel composition influence the selection of a processing heat treatment?
15. Other than increasing strength, for what three purposes are nonferrous metals often heat treated?
16. What are the six major mechanisms that can be used to increase the strength of a metal?
17. What is the most effective strengthening mechanism for the nonferrous metals?
18. What are the three steps in an age-hardening treatment?
19. What is the difference between a coherent precipitate and a distinct second-phase particle? Why does coherency offer significant strengthening?
20. What is overaging?
21. What is the difference between natural and artificial aging? Which offers more flexibility? Over which does the engineer have more control?
22. Why is it more difficult to understand the nonequilibrium strengthening treatments?
23. What types of heating and cooling conditions are imposed in an I-T or T-T-T diagram? Are they realistic for the processing of commercial items?
24. What are the stable equilibrium phases for steels at temperatures below the A_1 temperature?
25. What are some nonequilibrium structures that appear in the T-T-T diagram for a eutectoid composition steel?
26. Which steel structure is produced by a diffusionless phase change?
27. What is the major factor that influences the strength and hardness of martensite?
28. Most structure changes proceed to completion over time. The martensite transformation is different. What must be done to produce more martensite in a partially transformed structure?
29. Why is retained austenite an undesirable structure in heat-treated steels?
30. What types of steels are more prone to retained austenite?
31. Why are martensitic structures usually tempered before being put into use? What properties increase during tempering? Which ones decrease?
32. In what ways is the quench-and-temper heat treatment similar to age hardening? How are the property changes different in the two processes?
33. What is a C-C-T diagram? Why is it more useful than a T-T-T diagram?
34. What two features combine to determine the structure and properties of a heat-treated steel?
35. How do the various locations of a Jominy test specimen correlate with cooling rate?
36. What conditions are used to standardize the quench in the Jominy test?
37. What is the assumption that allows the data from a Jominy test to be used to predict the properties of various locations on a manufactured product?
38. What is hardenability? What capabilities are provided by high-hardenability materials?
39. What are the three stages of liquid quenching?
40. What are some of the major advantages and disadvantages of a water quench?
41. Why is an oil quench less likely to produce quench cracks than water or brine?
42. What are some of the attractive qualities of a polymer or synthetic quench?
43. What are some undesirable design features that may be present in parts that are to be heat treated?
44. Why would the residual stresses in steel be different from the residual stresses in an identically processed aluminum part?
45. What are some of the potentially undesirable effects of residual stresses?
46. What causes quench cracking to occur when steel is rapidly cooled?
47. Describe several techniques that utilize simultaneous transformation to reduce residual stresses in steel products.
48. What is thermomechanical processing?
49. What are some of the methods that can be used to selectively alter the surface properties of metal parts?
50. What are some of the attractive features of surface hardening with a laser beam?
51. How can a laser beam be manipulated and focused? How are these operations performed with an electron beam?
52. What is carburizing?
53. Why does a carburized part have to be further heat treated after the carbon is diffused into the surface? What are the various options?
54. In what ways might ionitriding be more attractive than conventional nitriding or carburizing?
55. For what type of products or product mixes might a batch furnace be preferred to a continuous furnace?
56. What are some possible functions of artificial atmospheres in a heat-treating furnace?
57. How are parts heated in a fluidized-bed furnace? What are some of the attractive features?
58. In what ways might the heat treatment of metals actually be an energy conservation measure?

Problems

1. A number of heat treatments have been devised to harden the surfaces of steel and other engineering metals. Consider the following processes:
    a. Flame hardening
    b. Induction hardening
    c. Laser-beam hardening
    d. Carburizing
    e. Nitriding
    f. Ionitriding

    For each of these processes, provide information relating to:
    (1) A basic description of how the process works
    (2) Typical materials on which the process is performed
    (3) Type of equipment required
    (4) Typical times, temperatures, and atmospheres required
    (5) Typical depth of hardening and reasonable limits
    (6) Hardness achievable
    (7) Subsequent treatments or processes that might be required
    (8) Information relating to distortion and/or stresses
    (9) Ability to use the process to harden selective areas
2. Investigate the nine areas in Problem 1 for one of the lesser known surface-modification treatments, such as ion implantation, boriding, chromizing, or other similar techniques.
3. This chapter presented four processing-type heat treatments whose primary objective is to soften, weaken, enhance

ductility, or promote machinability. Consider each of the following processes as they are applied to steels:

a. Full annealing
b. Normalizing
c. Process annealing
d. Spheroidizing

Provide information relating to:

1. A basic description of how the process works and what its primary objectives are
2. Typical materials on which the process is performed
3. Type of equipment used
4. Typical times, temperatures, and atmospheres required
5. Recommended rates of heating and cooling
6. Typical properties achieved

4. A number of different quenchants were discussed in the chapter, including brine, water, oil, synthetic polymer mixes, and even high-pressure gas flow. Select two of these and investigate the environmental concerns that may accompany their use.
5. Traditional manufacturing generally separates mechanical processing (such as forging, extrusion, presswork, or machining) and thermal processing (heat treatment), and applies them as sequential operations. Ausforming was presented as an example of a thermomechanical process where the mechanical and thermal processes are performed concurrently. When this is done, the resulting structures and properties are often quite different from the traditional. Identify another thermomechanical process and discuss its use and attributes.
6. It has been noted that *hot oil* is often a more effective quench than *cold oil*. Can you explain this apparent contradiction?

www.wiley.com/college/degarmo

Chapter 5 CASE STUDY

A Carpenter's Claw Hammer

Carpenter claw hammers are actually a rather sophisticated metallurgical product, since the loadings differ for the various locations. The claw sees static bending, while the eye sustains impacts, and the striking face sees impact contact with potentially hard surfaces.

As one might expect, the optimum properties and microstructures vary with location. While hammer handles have been made from a variety of materials, including heat-treated tubular 4140 steel, our problem will focus on the head.

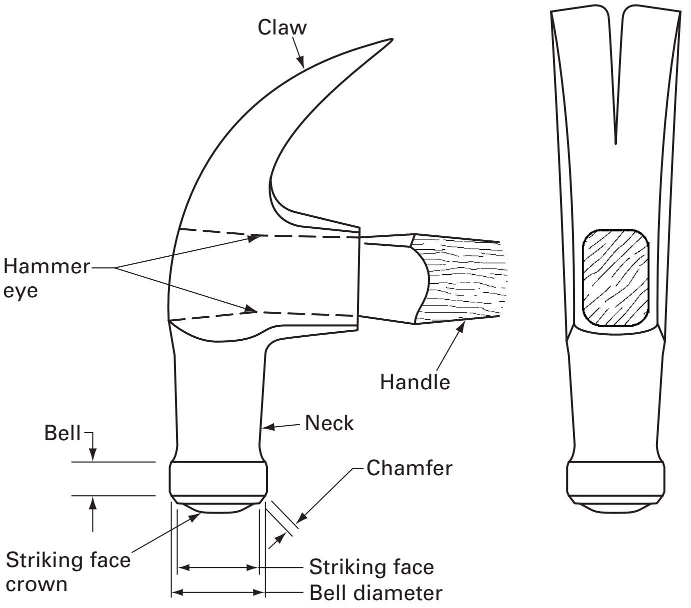

The following information was obtained from the American National Standards Institute (ANSI) Standard B173.1, "American National Standard Safety Requirements for Nail Hammers." This is a voluntary specification (recommendation only) developed as a "guide to aid the manufacturer, the consumer, and the general public."

According to the ANSI specification:

"Hammerheads shall be forged in one piece from special quality hot rolled carbon steel bars." While the specification allows for steels ranging from 1045 to 1088, two major manufacturers of high-quality tools have used 1078 steel as their material of choice, so we will go with their selection.

The hammer striking face "shall be hardened and tempered to a Rockwell hardness of not less than C 40 or more than C 60, and the steel directly behind the striking face shall be a toughened supporting core gradually decreasing in hardness."

"Hammer claws shall be hardened to a Rockwell hardness of not less than C 40 or more than C 55 for a minimum length of $\frac{3}{4}$-inch from the tip end; the remaining length to the base of the V-slot shall be of the same through hardness, or shall contain a toughened core gradually decreasing in hardness to the core center."

While there is no specification for the eye region, many manufacturers prefer for this area to have the greatest toughness (i.e., even softer still—as low as R_C 25!).

In essence, we are looking at a single piece of heat-treated steel that preferably exhibits different properties at different locations. For example, one top-quality hammer has a striking face of R_C 55 to 58, coupled with a claw of R_C 46 to 48. Another top-quality hammer has a striking face hardness of R_C 50 to 58, claw tip hardness of R_C 47 to 55, and a hardness in the crotch of the V of R_C 44 to 52. The rim of the striking face is softened to a lower hardness (R_C 41 to 48) to prevent chipping—a characteristic feature of this particular manufacturer.

Fixing our material as the above-used 1078 hot-rolled steel bar, and using forging as our shaping process:

1. What problems might be expected if the material on the striking face were too hard? Too soft? Consider each with respect to possible liability.
2. Describe some heat-treatment processes or sequences that could be used to produce a quality product like those described above.
3. Discuss the methods of heating, cooling or quenching, target temperatures, and so on that you are proposing to accomplish this task.
4. Finally, how might you duplicate the rim softening being achieved by the cited manufacturer?
5. Inexpensive hammers frequently use a single material and single heat treatment, rendering the properties similar for all locations. What are the major compromises? If these hammers were to be used by a professional carpenter, how might they be deficient?

CHAPTER 6

FERROUS METALS AND ALLOYS

6.1 INTRODUCTION TO HISTORY-DEPENDENT MATERIALS

Engineering materials are available with a wide range of useful properties and characteristics. Some of these are inherent to the particular material, but many others can be varied by controlling the manner of production and the details of processing. Metals are classic examples of such "history-dependent" materials. Their final properties are clearly affected by their past processing history. The particular details of the smelting and refining process control the resulting purity and the type and nature of any influential contaminants. The solidification process imparts structural features that may be transmitted to the final product. Preliminary operations such as the rolling of sheet or plate often impart directional variations to properties, and their impact should be considered during subsequent processing and use. Thus, while it is easy to take the attitude that "metals come from warehouses," it is important to recognize that aspects of prior processing can significantly influence further operations as well as the final properties of the product. The breadth of this book does not permit full coverage of the processes and methods involved in the production of engineering metals, but certain aspects will be presented because of their role in affecting subsequent performance.

6.2 FERROUS METALS

In this chapter we will introduce the major *ferrous* (iron-based) *metals* and *alloys*, summarized in Figure 6-1. These materials made possible the Industrial Revolution and have been the backbone of modern civilization. We see them everywhere in our lives—in the cars we drive, the homes in which we live, the cans we open, and the appliances that enhance our standard of living. Numerous varieties have been developed over the years to meet the specific needs of various industries. The developments and improvements have continued, with recent decades seeing the introduction of a number of new varieties and even classes of ferrous metals. According to the American Iron and Steel Institute, over 50% of the steels made today did not exist 10 years ago and over 70% of the steel used in automotive production meets this criteria. The newer steels are stronger than ever, easier to shape, and more corrosion resistant.

In addition, all steel is recyclable, and this recycling does not involve any loss in material quality. In fact, more steel is recycled each year than all other materials combined, including aluminum, glass, and paper. Because steel is magnetic, it is easily separated and recovered from demolished buildings, junked automobiles, and discarded

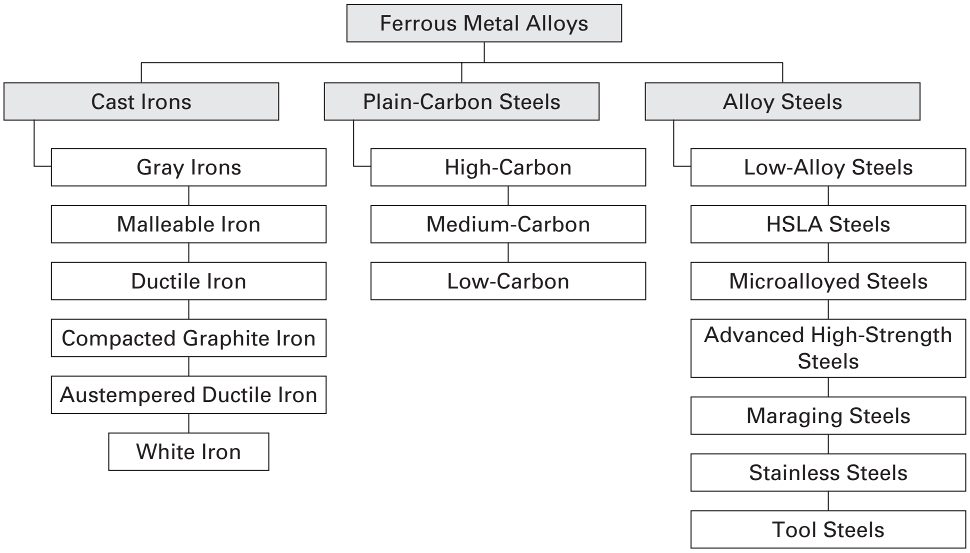

FIGURE 6-1 Classification of common ferrous metals and alloys.

appliances. In 2003, nearly 70 million tons of steel were recycled in the United States, for an overall recycling rate of nearly 71%. The recycling rate for steel cans was 60.2%, 89.7% for large appliances, and 102.9% for automobiles. That's correct—more steel was recovered from scrap cars than was used in the production of new vehicles! Each ton of recycled steel saves over 4000 pounds of raw materials and 74% of the energy required to make a ton of new steel.

6.3 IRON

For centuries, *iron* has been the most important of the engineering metals. While iron is the fourth most plentiful element in the earth's crust, it is rarely found in the metallic state. Instead, it occurs in a variety of mineral compounds, known as ores, the most attractive of which are iron oxides coupled with companion impurities. To produce metallic iron, the ores are processed in a manner that breaks the iron–oxygen bonds (chemical reducing reactions). Ore, limestone, coke (carbon), and air are continuously introduced into specifically designed furnaces and molten metal is periodically withdrawn.

Within the furnace, other oxides (which were impurities in the original ore) will also be reduced. All of the phosphorus and most of the manganese will enter the molten iron. Oxides of silicon and sulfur compounds are partially reduced, and these elements also become part of the resulting metal. Other contaminant elements, such as calcium, magnesium, and aluminum, are collected in the limestone-based slag and are largely removed from the system. The resulting *pig iron* tends to have roughly the following composition:

Carbon	3.0–4.5%
Manganese	0.15–2.5%
Phosphorus	0.1–2.0%
Silicon	1.0–3.0%
Sulfur	0.05–0.1%

A small portion of this iron is cast directly into final shape and is classified as cast iron. Most commercial cast irons, however, are produced by recycling scrap iron and steel, with the possible addition of some newly produced pig iron. The metallurgical properties of cast iron have been presented in Chapter 4, and its melting and utilization in the casting process will be developed in Chapters 11 through 13. Most pig iron, however, is further processed into steel.

6.4 STEEL

Steel is an extremely useful engineering material. It offers strength, rigidity, and durability. From a manufacturing perspective, its formability, joinability, and paintability, as well as repairability, are all attractive. For the past 20 years, steel has accounted for about 55% of the weight of a typical passenger car and is expected to continue at this level. While the automotive and construction industries are major consumers of steel, the material is also used extensively in containers, appliances, and machinery as well as the infrastructure of such industries as oil and gas.

The manufacture of *steel* is essentially an oxidation process that decreases the amount of carbon, silicon, manganese, phosphorus, and sulfur in a molten mixture of pig iron and/or steel scrap. In 1856, the Kelly–Bessemer process opened up the industry by enabling the manufacture of commercial quantities of steel. The open-hearth process surpassed the Bessemer process in tonnage produced in 1908 and was producing over 90% of all steel in 1960. Currently, most of our commercial steels are produced by a variety of oxygen and electric-arc furnaces.

In many of the current processes, air or oxygen passes over or through the molten metal to drive a variety of exothermic refining reactions. Carbon oxidizes to form gaseous CO or CO_2, which then exits the melt. Other elements, such as silicon and phosphorus, are similarly oxidized and, being lighter than the metal, rise to be collected in a removable slag. At the same time, oxygen and other elements from the reaction gases dissolve in the molten metal and may later become a cause for concern.

SOLIDIFICATION CONCERNS

Regardless of the method by which the steel is made, it must undergo a change from liquid to solid before it can become a usable product. The liquid can be converted directly into finish-shape steel castings or solidified into a form suitable for further processing. In most cases, some form of continuous casting produces the feedstock material for subsequent forging or rolling operations.

Prior to solidification, we want to remove as much contamination as possible. The molten metal is poured from the steelmaking furnaces into containment vessels, known as *ladles*. Historically, the ladles simply served as transfer and pouring containers, but they have recently emerged as the site for additional processing. *Ladle metallurgy* refers to a variety of processes designed to provide final purification and to fine-tune both the chemistry and temperature of the melt. Alloy additions can be made; carbon can be further reduced; dissolved gases can be reduced or removed; and steps can be taken to control subsequent grain size, limit inclusion content, reduce sulfur, and control the shape of any included sulfides. Stirring, degassing, reheating, and the injection of powdered alloys or cored wire can all be performed to increase the cleanliness of the steel and provide for tighter control of the chemistry and properties.

The processed liquid is then poured from these ladles into molds or some form of *continuous caster*, usually through a bottom-pouring process such as the one shown schematically in Figure 6-2. By extracting the metal from the bottom of the ladle, slag and floating matter are not transferred, and a cleaner product results. Figure 6-3a illus-

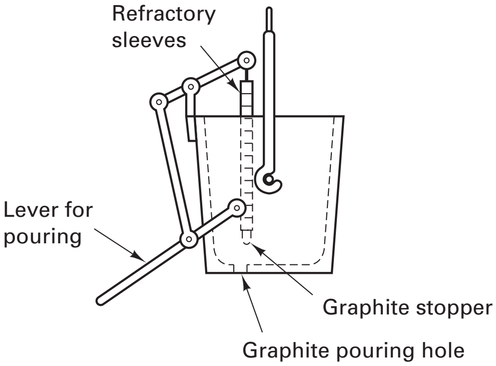

FIGURE 6-2 Diagram of a bottom-pouring ladle.

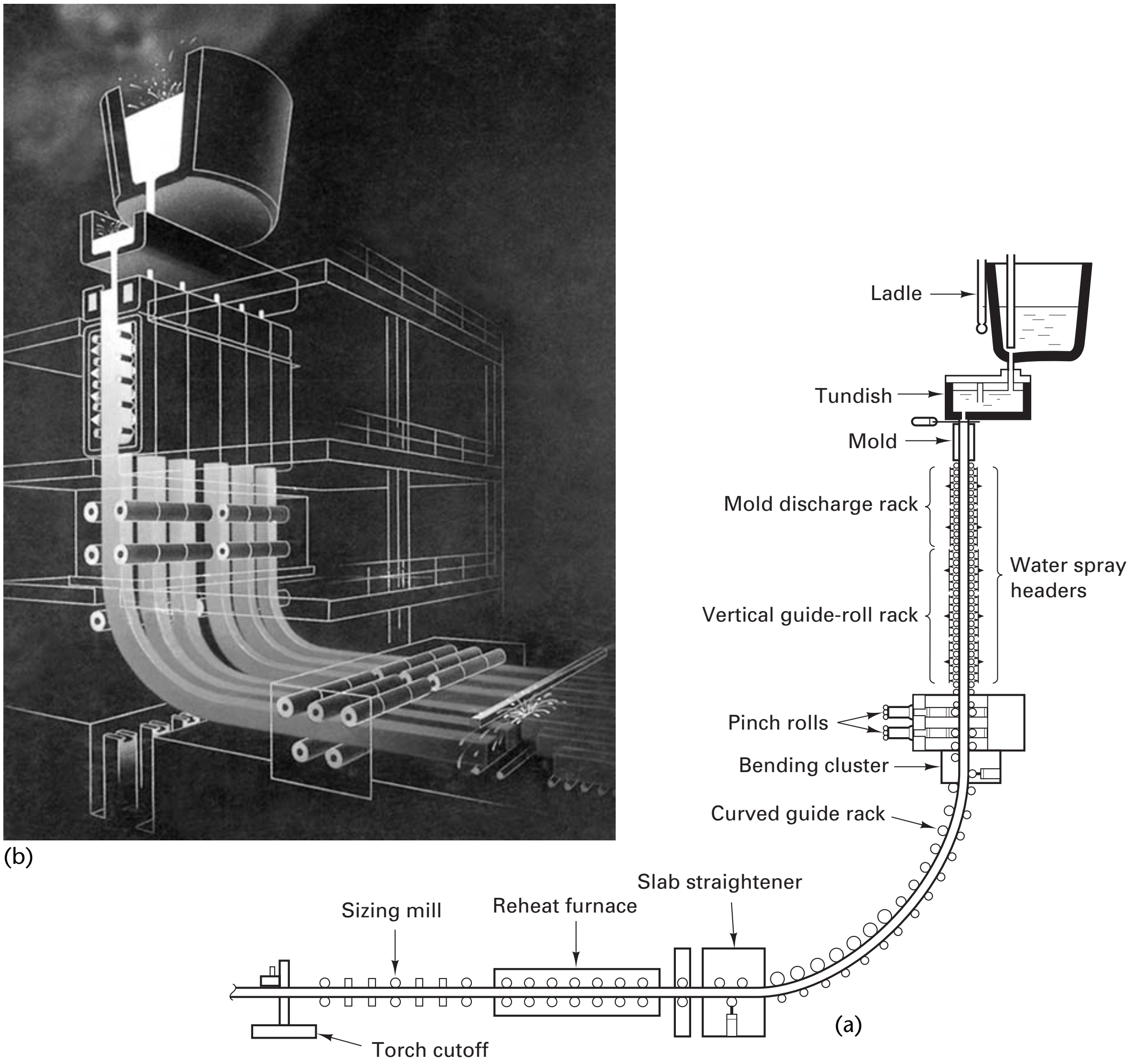

FIGURE 6-3 (a) Schematic representation of the continuous casting process for producing billets, slabs, and bars. (b) Simultaneous continuous casting of multiple strands. *(a) (Courtesy of Materials Engineering, Penton Publishing, New York, NY.)*

trates a typical continuous caster, in which molten metal flows from a ladle, through a tundish, and into a bottomless, water-cooled mold, usually made of copper. Cooling is controlled so that the outside has solidified before the metal exits the mold. Direct water sprays further cool the emerging metal to complete the solidification. The solid metal can then be cut to desired length, or, since the cast solid is still hot, it can be bent and fed horizontally through a short reheat furnace or directly to a rolling operation. If the size and shape of the mold are varied, products can be cast with a variety of cross sections with names such as slab, bloom, billet, and strand. Figure 6-3b depicts the simultaneous casting of multiple strands. Compared to the casting of discrete ingots, continuous casting offers significant reduction in cost, energy, and scrap. In addition, the products have improved surfaces, more uniform chemical composition, and fewer oxide inclusions.

DEOXIDATION AND DEGASSIFICATION

As a result of the steelmaking process, large amounts of oxygen can be dissolved in the molten metal. During the subsequent cooling and solidification, the solubility levels decrease significantly, as shown in Figure 6-4, and the oxygen and other gases are rejected. The rejected oxygen frequently links with carbon to produce carbon monoxide

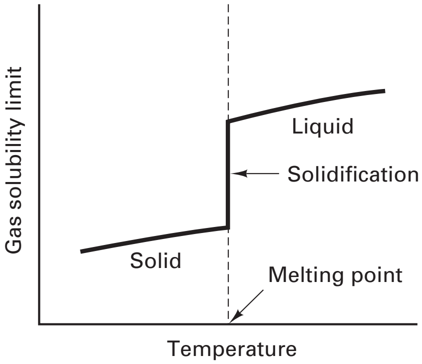

FIGURE 6-4 Solubility of gas in a metal as a function of temperature showing significant decrease upon solidification.

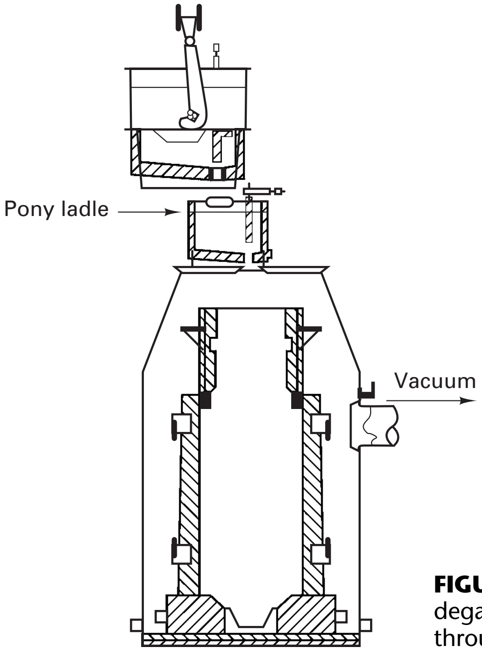

FIGURE 6-5 Method of degassing steel by pouring through a vacuum.

gas, which may escape through the liquid or become trapped to produce a porous solid. The bubble-induced porosity may take various forms ranging from small, dispersed voids to large blowholes. While these pores can often be welded shut during subsequent hot forming, some may not be fully closed, and others may not weld upon closure. Cracks and internal voids can persist into a finished product.

Porosity problems can often be avoided by either removing the oxygen prior to solidification or by making sure it does not reemerge as a gas. Aluminum, ferromanganese, or ferrosilicon can be added to molten steel to provide a material whose affinity for oxygen is higher than that of carbon. The rejected oxygen then reacts with these *deoxidizer* additions to produce solid metal oxides that are either removed from the molten metal or become dispersed throughout the structure.

While deoxidizer additions can effectively tie up dissolved oxygen, small amounts of other gases, such as hydrogen and nitrogen, can also have deleterious effects on the performance of steels. This is particularly important for alloy steels because the solubility of these gases tends to be increased by alloy additions, such as vanadium, niobium, and chromium. Alternative degassing processes have been devised that reduce the amounts of all dissolved gases. Figure 6-5 illustrates one form of *vacuum degassing*, in which an ingot mold is placed in an evacuated chamber, and a stream of molten metal passes through a vacuum during pouring. Because a large amount of exposed surface is created during the pouring operation, the vacuum is able to extract most of the dissolved gas.

An alternative to vacuum degassing is the *consumable-electrode remelting* process, where an already-solidified metal electrode replaces the ladle of molten metal. As the electrode is progressively remelted, molten droplets pass through a vacuum, and the extremely high surface area again provides an effective means of gas removal. If the melting is done by an electric arc, the process is known as *vacuum arc remelting* (VAR). If induction heating is used, the process becomes *vacuum induction melting* (VIM). Both are highly effective in removing dissolved gases, but they fail to remove any nonmetallic impurities that may be present in the metal.

The *electroslag remelting* process (ESR), shown in Figure 6-6, can be used to produce extremely clean, gas-free metal. A solid electrode is again melted and recast using an electric current, but the entire remelting is conducted under a blanket of molten flux. Nonmetallic impurities float and are collected in the flux, leaving a newly solidified metal structure with greatly improved quality. No vacuum is required, since the molten material is confined beneath the flux and the progressive freezing permits easy escape for the rejected gas. This process is simply a large-scale version of the electroslag welding process that will be discussed in Chapter 34.

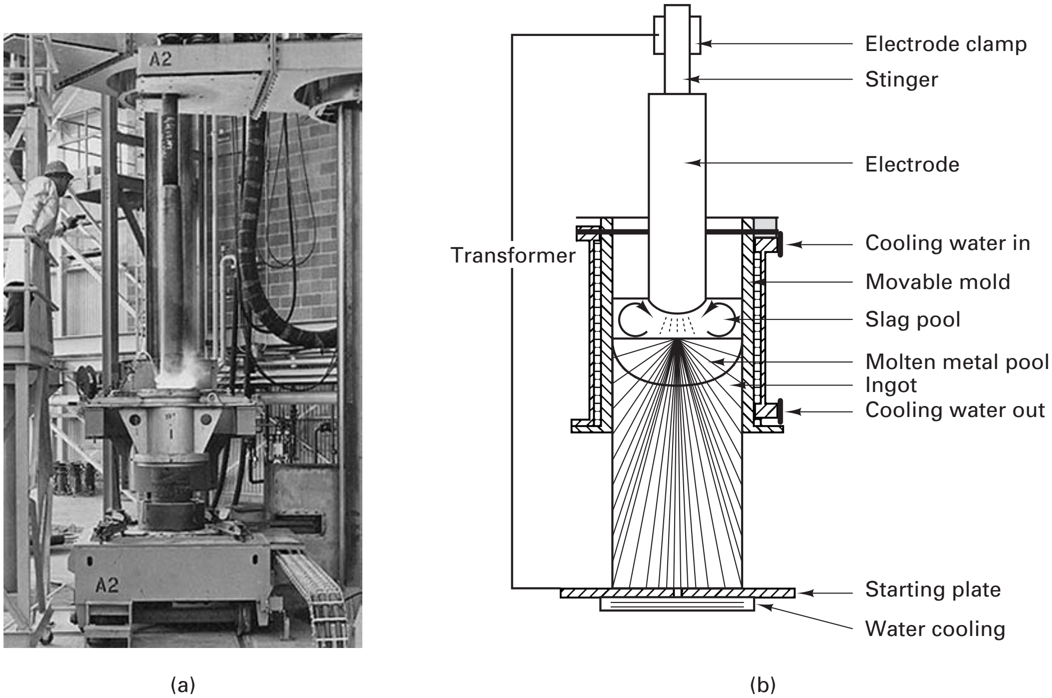

FIGURE 6-6 (a) Production of an ingot by the electroslag remelting process; (b) schematic representation of this process showing the starting electrode, melting arc, and resolidified ingot. *(Courtesy of Carpenter Technology Corporation, Reading, PA.)*

PLAIN-CARBON STEEL

While theoretically an alloy of only iron and carbon, commercial steel actually contains manganese, phosphorus, sulfur, and silicon in significant and detectable amounts. When these four additional elements are present in their normal percentages and no minimum amount is specified for any other constituent, the product is referred to as *plain-carbon steel*. Strength is primarily a function of carbon content, increasing with increasing carbon, as shown in Table 6-1. Unfortunately, the ductility, toughness, and weldability of plain-carbon steels decrease as the carbon content is increased, and hardenability is quite low. In addition, the properties of ordinary carbon steels are impaired by both high and low temperatures (loss of strength and embrittlement, respectively), and they are subject to corrosion in most environments.

Plain-carbon steels are generally classed into three subgroups based on their carbon content. *Low-carbon steels* have less than 0.20% carbon and possess good formability (can be strengthened by cold work) and weldability. Their structures are usually ferrite and pearlite, and the material is generally used as it comes from the hot-forming or cold-forming processes, or in the as-welded condition. *Medium-carbon steels* have between 0.20 and 0.50% carbon, and they can be quenched to form martensite or bainite if the section size is small and a severe water or brine quench is used. The best balance of properties is obtained at these carbon levels, where the high toughness and ductility of the low-carbon material is in good compromise with the strength and hardness that come with higher carbon contents. These steels are extremely popular and find numerous mechanical applications. *High-carbon steels* have more than 0.50% carbon. Toughness and formability are quite low, but hardness and wear resistance are high. Severe quenches can form martensite, but hardenability is still poor. Quench cracking is often a problem when the material is pushed to its limit. Figure 6-7 depicts the characteristic properties of low-, medium-, and high-carbon steels using a

TABLE 6-1 Effect of Carbon on the Strength of Annealed Pain-Carbon Steels[a]

		Minimum Tensile Strength	
Type of Steel	Carbon Content	Mpa	ksi
1020	0.20%	414	60
1030	0.30%	448	65
1040	0.40%	517	75
1050	0.50%	621	90

[a] Data are from ASTM Specification A732.

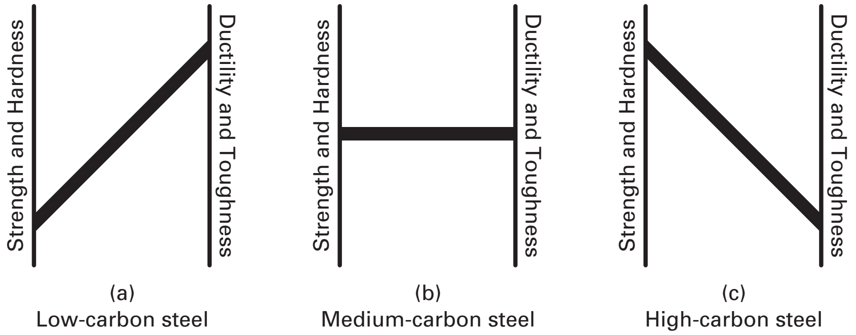

FIGURE 6-7 A comparison of low-carbon, medium-carbon, and high-carbon steels in terms of their relative balance of properties. (a) Low-carbon steel has excellent ductility and fracture resistance, but lower strength; (b) medium-carbon steel has balanced properties; (c) high-carbon steel has high strength and hardness at the expense of ductility and fracture resistance.

balance of properties that shows the offsetting characteristics of "strength and hardness" and "ductility and toughness."

Compared to other engineering materials, the carbon steels offer high strength and high stiffness, coupled with reasonable toughness. Unfortunately, they also rust easily and generally require some form of surface protection, such as paint, galvanizing, or other coating. The plain-carbon steels are generally the lowest-cost steel material and should be given first consideration for many applications. Their limitations, however, may become restrictive. When improved performance is required, these steels can often be upgraded by the addition of one or more alloying elements.

ALLOY STEELS

The differentiation between plain-carbon and alloy steel is often somewhat arbitrary. Both contain carbon, manganese, and usually silicon. Copper and boron are possible additions to both classes. Steels containing more than 1.65% manganese, 0.60% silicon, or 0.60% copper are usually designated as *alloy steels*. Also, a steel is considered to be an alloy steel if a definite or minimum amount of other alloying element is specified. The most common alloy elements are chromium, nickel, molybdenum, vanadium, tungsten, cobalt, boron, and copper, as well as manganese, silicon, phosphorus, and sulfur in amounts greater than are normally present. If the steel contains less than 8% of total alloy addition, it is considered to be a *low-alloy steel*. Steels with more than 8% alloying elements are *high-alloy steels*.

In general, alloying elements are added to steels in small percentages (usually less than 5%) to improve strength or hardenability, or in much larger amounts (often up to 20%) to produce special properties such as corrosion resistance or stability at high or low temperatures. Additions of manganese, silicon, or aluminum may be made during the steelmaking process to remove dissolved oxygen from the melt. Manganese, silicon, nickel, and copper add strength by forming solid solutions in ferrite. Chromium, vanadium, molybdenum, tungsten, and other elements increase strength by forming dispersed second-phase carbides. Nickel and copper can be added in small amounts to improve corrosion resistance. Nickel has been shown to impart increased toughness and impact resistance, and molybdenum helps resist embrittlement. Zirconium, cerium, and calcium can also promote increased toughness by controlling the shape of inclusions. Machinability can be enhanced through the formation of manganese sulfides or by additions of lead, bismuth, selenium, or tellurium. Still other additions can be used to provide ferrite or austenite grain size control.

Selection of an alloy steel still begins with identifying the proper carbon content. Table 6-2 shows the effect of carbon on the strength of quenched-and-tempered alloy steels. The strength values are significantly higher than those of Table 6-1, reflecting the difference between the annealed and quenched-and-tempered microstructures. The 4130 steel has about 1.2% total alloying elements, 4330 has 3.0%, and 8630 has about 1.3%, yet all have the same quenched-and-tempered tensile strength. Strength and hardness depend primarily on carbon content. The primary

TABLE 6-2 Effect of Carbon on the Strength of Quenched-and-Tempered Alloy Steels[a]

		Minimum Tensile Strength	
Type of Steel	Carbon Content	Mpa	ksi
4130	0.30%	1030	150
4330	0.30%	1030	150
8630	0.30%	1030	150
4140	0.40%	1241	180
4340	0.40%	1241	180

[a] Data from ASTM Specification A732.

TABLE 6-3 Principal Effects of Major Alloying Elements in Steel

Element	Percentage	Primary Function
Aluminum	0.95–1.30	Alloying element in nitriding steels
Bismuth	—	Improves machinability
Boron	0.001–0.003	Powerful hardenability agent
Chromium	0.5–2	Increase of hardenability
	4–18	Corrosion resistance
Copper	0.1–0.4	Corrosion resistance
Lead	—	Improved machinability
Manganese	0.25–0.40	Combines with sulfur to prevent brittleness
	>1	Increases hardenability by lowering transformation points and causing transformations to be sluggish
Molybdenum	0.2–5	Stable carbides; inhibits grain growth
Nickel	2–5	Toughener
	12–20	Corrosion resistance
Silicon	0.2–0.7	Increases strength
	2	Spring steels
	Higher percentages	Improves magnetic properties
Sulfur	0.08–0.15	Free-machining properties
Titanium	—	Fixes carbon in inert particles
		Reduces martensitic hardness in chromium steels
Tungsten	—	Hardness at high temperatures
Vanadium	0.15	Stable carbides; increases strength while retaining ductility, Promotes fine grain structure

role of an alloy addition is usually to increase *hardenability*, but other effects are also possible, such as modified toughness or machinability. The most common hardenability-enhancing elements (in order of decreasing effectiveness) are manganese, molybdenum, chromium, silicon, and nickel. Boron is an extremely powerful hardenability agent. Only a few thousandths of a percent are sufficient to produce a significant effect in low-carbon steels, but the results diminish rapidly with increasing carbon content. Since no carbide formation or ferrite strengthening accompanies the addition, improved machinability and cold-forming characteristics may favor the use of boron in place of other hardenability additions. Small amounts of vanadium can also be quite effective, but the response drops off as the quantity is increased.

Table 6-3 summarizes the primary effects of the common alloying elements in steel. A working knowledge of this information may be useful in selecting an alloy steel to meet a given set of requirements. Alloying elements are often used in combination, however, resulting in the immense variety of alloy steels that are commercially available. To provide some degree of simplification, a classification system has been developed and has achieved general acceptance in a variety of industries.

AISI–SAE CLASSIFICATION SYSTEM

The most common classification scheme for alloy steels is the *AISI–SAE identification system*. This system, which classifies alloys by chemistry, was started by the Society of Automotive Engineers (SAE) to provide some standardization for the steels used in the automotive industry. It was later adopted and expanded by the American Iron and Steel Institute (AISI) and has been incorporated into the Universal Numbering System that was developed to include all engineering metals. Both plain-carbon and low-alloy steels are identified by a four-digit number, where the first number indicates the major alloying elements and the second number designates a subgrouping within the major alloy system. These first two digits can be interpreted by looking them up on a list, such as the one presented in Table 6-4. The last two digits of the number indicate the approximate amount of carbon, expressed as "points," where one point is equal to 0.01%. Thus, a 1080 steel would be a plain-carbon steel with 0.80% carbon. Similarly, a 4340 steel

TABLE 6-4 AISI–SAE Standard Steel Designations and Associated Chemistries

AISI Number	Type	Alloying Elements (%)					
		Mn	Ni	Cr	Mo	V	Other
1xxx	Carbon steels						
10xx	Plain carbon						
11xx	Free cutting (S)						
12xx	Free cutting (S) and (P)						
15xx	High manganese						
13xx	High manganese	1.60–1.90					
2xxx	Nickel steels		3.5–5.0				
3xxx	Nockel–chromium		1.0–3.5	0.5–1.75			
4xxx	Molybdenum						
40xx	Mo				0.15–0.30		
41xx	Mo, Cr			0.40–1.10	0.08–0.35		
43xx	Mo, Cr, Ni		1.65–2.00	0.40–0.90	0.20–0.30		
44xx	Mo				0.35–0.60		
46xx	Mo, Ni (low)		0.70–2.00		0.15–0.30		
47xx	Mo, Cr, Ni		0.90–1.20	0.35–0.55	0.15–0.40		
48xx	Mo, Ni (high)		3.25–3.75		0.20–0.30		
5xxx	Chromium						
50xx				0.20–0.60			
51xx				0.70–1.15			
6xxx	Chromum–vanadium						
61xx				0.50–1.10		0.10–0.15	
8xxx	Ni, Cr, Mo						
81xx			0.20–0.40	0.30–0.55	0.08–0.15		
86xx			0.40–0.70	0.40–0.60	0.15–0.25		
87xx			0.40–0.70	0.40–0.60	0.20–0.30		
88xx			0.40–0.70	0.40–0.60	0.30–0.40		
9xxx	Other						
92xx	High silicon						1.20–2.20Si
93xx	Ni, Cr, Mo		3.00–3.50	1.00–1.40	0.08–0.15		
94xx	Ni, Cr, Mo		0.30–0.60	0.30–0.50	0.08–0.15		

would be a Mo–Cr–Ni alloy with 0.40% carbon. Because of the double-digit groupings, these steels are identified as a "ten eighty" and a "forty-three forty."

Letters may also be incorporated into the designation. The letter *B* between the second and third digits indicates that the base metal has been supplemented by the addition of boron. Similarly, an *L* in this position indicates a lead addition for enhanced machinability. A letter prefix may also be employed to designate the process used to produce the steel, such as *E* for electric furnace.

When hardenability is a major requirement, one might consider the H grades of AISI steels, designated by an *H* suffix attached to the standard designation. The chemistry specifications are somewhat less stringent, but the steel must now meet a hardenability standard. The hardness values obtained for each point of a Jominy test specimen (see Chapter 5) must lie within a predetermined band for that particular type of steel.

Other designation organizations, such as the American Society for Testing and Materials (ASTM) and the U.S. government ("Military" specifications and federal), have specification systems based more on specific applications. Acceptance into a given classification is generally determined by physical or mechanical properties rather than the chemistry of the metal. ASTM designations are often used when specifying structural steels.

SELECTING ALLOY STEELS

From the previous discussion it is apparent that two or more alloying elements can often produce similar effects. Thus, when properly heat treated, steels with substantially different chemical compositions can possess almost identical mechanical properties. Figure 6-8 clearly demonstrates this fact, which becomes particularly important when one realizes that some alloying elements can be very costly and others may be in short supply due to emergencies or political constraints. Overspecification has often been employed to guarantee success despite sloppy manufacturing and heat-treatment practice. The correct steel, however, is usually the least expensive one that can be consistently processed to achieve the desired properties. This usually involves taking advantage of the effects provided by all of the alloy elements.

When selecting alloy steels, it is also important to consider both use and fabrication. For one product, it might be permissible to increase the carbon content to obtain greater strength. For another application, such as one involving assembly by welding, it might be best to keep the carbon content low and use a balanced amount of alloy elements, obtaining the desired strength while minimizing the risk of weld cracking. Steel selection involves defining the required properties, determining the best microstructure to provide those properties (strength can be achieved through alloying, cold work, and heat treatment, as well as combinations thereof), determining the method of part or product manufacture (casting, machining, metalforming, etc.), and selecting the steel with the best carbon content and hardenability characteristics to achieve those goals.

HIGH-STRENGTH LOW-ALLOY STRUCTURAL STEELS

Among the general categories of alloy steels are: (1) the *constructional alloys*, where the desired properties are typically developed by a separate thermal treatment and the specific alloy elements tend to be selected for their effect on hardenability, and (2) the *high-strength low-alloy* (HSLA) or microalloyed types, which rely largely on chemical composition to develop the desired properties in the as-rolled or normalized condition. The constructional alloys are usually purchased by AISI–SAE identification, which

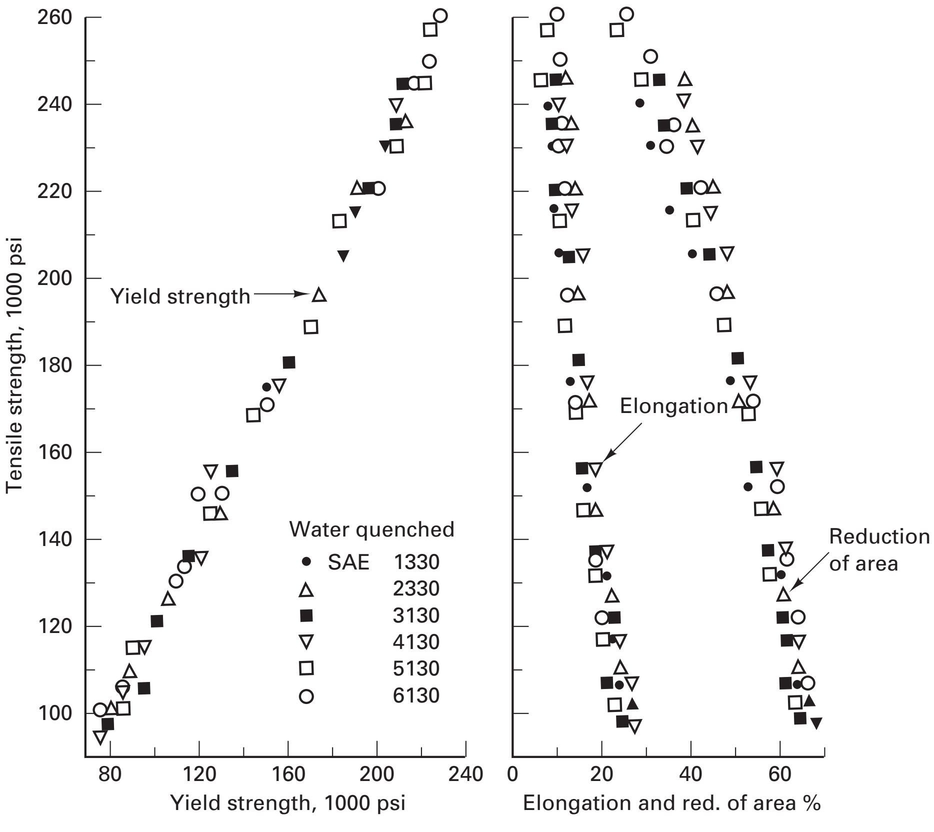

FIGURE 6-8 Relationships between the mechanical properties of a variety of properly heat-treated AISI–SAE alloy steels. *(Courtesy of ASM International, Materials Park, OH.)*

TABLE 6-5 Typical Compositions and Strength Properties of Several Groups of High-Strength Low-Alloy Structural Steels

	Chemical Compositions[a] (%)					Strength Properties				
						Yield		Tensile		Elongation in 2 in.
Group	C	Mn	Si	Cb	V	ksi	MPa	ksi	MPa	(%)
Columbium or vanadium	0.20	1.25	0.30	0.01	0.01	55	379	70	483	20
Low manganese–vanadium	0.10	0.50	0.10		0.02	40	276	60	414	35
Manganese–copper	0.25	1.20	0.30			50	345	75	517	20
Manganese–vanadium–copper	0.22	1.25	0.30		0.02	50	345	70	483	22

[a] All have 0.04% P, 0.05% S, and 0.20% Cu.

effectively specifies chemistry. The HSLA materials generally focus on product (size and shape) and desired properties. When steels are specified by mechanical properties, the supplier or producer is free to adjust the chemistry (within limits), and substantial cost savings may result. To assure success, however, it is important that all of the necessary properties be specified.

The HSLA materials provide increased strength-to-weight compared to conventional carbon steels for only a modest increase in cost. They are available in a variety of forms, including sheet, strip, plate, structural shapes, and bars. The dominant property requirements generally are high yield strength, good weldability, and acceptable corrosion resistance. Ductility and hardenability may be somewhat limited, however. The increase in strength, and the resistance to martensite formation in a weld zone, is obtained by controlling the amounts of carbon, manganese, and silicon, with the addition of small amounts of niobium, vanadium, titanium, or other alloys. About 0.2% copper can be added to improve corrosion resistance.

Because of their higher yield strength, weight savings of 20 to 30% can often be achieved with no sacrifice to strength or safety. Rolled and welded HSLA steels are being used in automobiles, trains, bridges, and buildings. Because of their low alloy content and high-volume application, their cost is often little more than that of the ordinary plain-carbon steels. Table 6-5 presents the chemistries and properties of several of the more common types.

MICROALLOYED STEELS IN MANUFACTURED PRODUCTS

In terms of both cost and performance, *microalloyed steels* occupy a position between carbon steels and the alloy grades, and they are being used increasingly as substitutes for heat-treated steels in the manufacture of small- to medium-sized discrete parts. These low- and medium-carbon steels contain small amounts (0.05 to 0.15%) of alloying elements, such as niobium, vanadium, titanium, molybdenum, zirconium, boron, rare earth elements, or combinations thereof. The primary effect of the alloy addition is to provide grain refinement and/or precipitation strengthening. Yield strengths between 500 and 750 MPa (70 and 110 ksi) can be obtained without heat treatment. Weldability can be retained or even improved if the carbon content is simultaneously decreased. In essence, these steels offer maximum strength with minimum carbon, while simultaneously preserving weldability, machinability, and formability. Compared to a quenched-and-tempered alternative, however, ductility and toughness are generally somewhat inferior.

Cold-formed microalloyed steels require less cold work to achieve a desired level of strength, so they tend to have greater residual ductility. Hot-formed products, such as forgings, can often be used in the air-cooled condition. By means of accurate temperature control and controlled-rate cooling directly from the forming operation, mechanical properties can be produced that approximate those of quenched-and-tempered material. Machinability can be enhanced because of the more uniform hardness and the fact that the ferrite–pearlite structure of the microalloyed steel is often more machinable than the ferrite–carbide structure of the quenched-and-tempered variety. Fatigue life and wear resistance can also be superior to those of the heat-treated counterparts.

In applications where the properties are adequate, microalloyed steels can often provide attractive cost savings. Energy savings can be substantial, straightening or stress relieving after heat treatment is no longer necessary, and quench cracking is not a problem. Due to the increase in material strength, the size and weight of finished products can often be reduced. As a result, the cost of a finished forging could be reduced by 5 to 25%.

If these materials are to attain their optimum properties, certain precautions must be observed. During the elevated-temperature segments of processing, the material must be heated high enough to place all of the alloys into solution. After forming, the products should be rapidly air cooled to 540° to 600°C (1000° to 1100°F) before dropping into collector boxes. In addition, microalloyed steels tend to through-harden upon air cooling, so products fail to exhibit the lower-strength, higher-toughness interiors that are typical of the quenched-and-tempered materials.

BAKE-HARDENABLE STEEL SHEET

Bake-hardenable steel has assumed a significant role in automotive sheet applications. These low-carbon steels are processed in such a way that they are resistant to aging during normal storage but begin to age during sheet metal forming. A subsequent exposure to heat during the paint-baking operation completes the aging process and adds an additional 35 to 70 MPa (5 to 10 ksi), raising the final yield strength to approximately 275 MPa (40 ksi). Since the increase in strength occurs after the forming operation, the material offers good formability coupled with improved dent resistance in the final product. In addition, it allows weight savings to be achieved without compromising the attractive features of steel sheet, which include spot weldability, good crash energy absorption, low cost, and full recyclability.

ADVANCED HIGH-STRENGTH STEELS (AHSS)

Since 2000, there have been significant developments in automotive materials, with large amounts of low-carbon and HSLA steels likely to be replaced by the advanced high-strength steels (AHSS). The AHSS steels are primarily ferrite-phase, soft steels with varying amounts of martensite, bainite, and retained austenite, which offer high strength with enhanced ductility. While previous high-strength grades, such as HSLA, suffered from reduced formability, the AHSS materials enable the stamping or hydroforming of more complex parts. Parts can often be integrated into single pieces, eliminating the cost and time associated with assembly, and the higher strength provides improved fatigue and crash performance, along with the possibility of weight reduction.

Dual-phase steels form when we quench material from a temperature that is above the A_1 but below the A_3, where the structure consists of ferrite and high-carbon austenite. During the quench, the ferrite remains unaffected, while the high-carbon austenite transforms to high-carbon martensite. A low- or medium-carbon steel now has a mixed microstructure of weak, ductile ferrite combined with high-strength, high-hardness, high-carbon martensite. The dual-phase structure offers strengths that are comparable to HSLA materials, coupled with improved forming characteristics and no loss in weldability. The high work-hardening rates and excellent elongation lead to a high ultimate tensile strength coupled with a low initial yield strength. The high strain rate sensitivity means that the faster the steel is crushed, the more energy it absorbs—a feature that further enhances the crash resistance of automotive structures.

While the dual-phase steels have structures of ferrite and martensite, *transformation-induced plasticity* (TRIP) steels contain ferrite with a combination of martensite, bainite, and retained austenite. Since the retained austenite transforms progressively to martensite as the steel is deformed, the high work-hardening rates of the TRIP steels persist to high strains, offering significant advantages in operations such as stretch forming and deep drawing. Alternatively, the transformation to martensite and high rate of work hardening can also be used to provide excellent energy absorption during crash deformation.

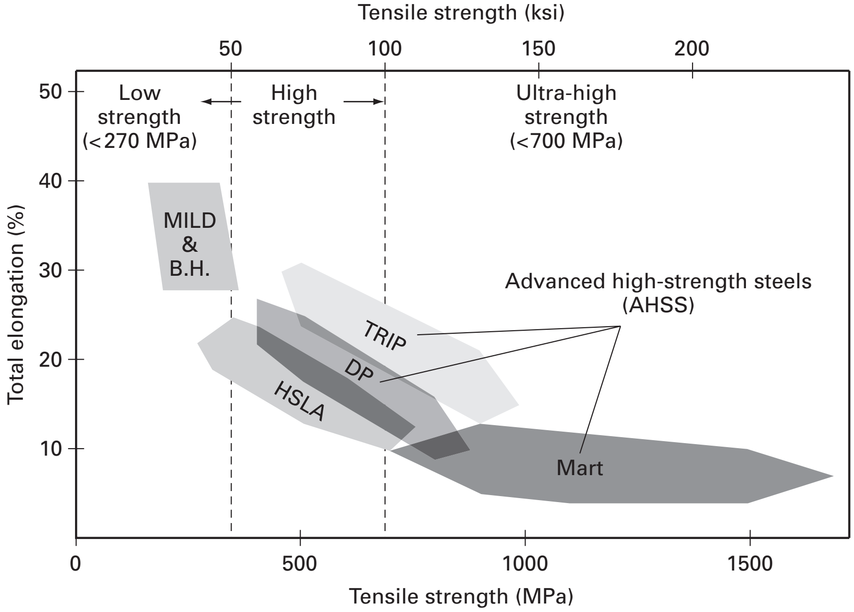

FIGURE 6-9 Relative strength and formability (elongation) of conventional, high-strength low-alloy, and advanced high-strength steels. B.H. = bake hardenable; DP = dual phase; and Mart = martensitic.

Complex-phase (CP) steels and martensitic (Mart) steels offer even higher strengths with useful capacity for deformation and energy absorption. The CP steels have a microstructure of ferrite and a higher volume fraction of hard phases (martensite and bainite), strengthened further by a fine precipitate of niobium, titanium, or vanadium carbides or nitrides. The Mart steels are almost entirely martensite and can have tensile strengths up to 1700 MPa (245 ksi).

Figure 6-9 shows the relative strengths and formability (elongation) of the conventional steels (including mild steels and bake-hardenable steels), HSLA steels, and the newer AHSS materials. The carbon–manganese steels would bridge the gap between the mild and bake-hardenable and the HSLA steels. Also included in this figure are some useful distinctions between low-strength steels (ultimate tensile strength below 270 MPa or 40 ksi), high-strength steel, and ultra-high-strength steels (ultimate tensile strength above 700 MPa or 100 ksi).

FREE-MACHINING STEELS

The increased use of high-speed, automated machining has spurred the use and development of several varieties of *free-machining steels*. These steels machine readily and form small chips when cut. The smaller chips reduce the length of contact between the chip and cutting tool, thereby reducing the associated friction and heat, as well as required power and wear on the cutting tool. The formation of small chips also reduces the likelihood of chip entanglement in the machine and makes chip removal much easier. On the negative side, free-machining steels often carry a cost premium of 15 to 20% over conventional alloys, but this increase may be easily recovered through higher machining speeds, larger depths of cut, and extended tool life.

Free-machining steels are basically carbon steels that have been modified by an addition of sulfur, lead, bismuth, selenium, tellurium, or phosphorus plus sulfur to enhance machinability. Sulfur combines with manganese to form soft manganese sulfide inclusions. These, in turn, serve as chip-breaking discontinuities within the structure. The inclusions also provide a built-in lubricant that prevents formation of a built-up edge on the cutting tool and imparts an improved cutting geometry (see Chapter 21). In leaded materials, the insoluble lead particles work in much the same way.

The bismuth free-machining steels are an attractive alternative to the previous varieties. Bismuth is more environmentally acceptable (compared to lead), has a reduced tendency to form stringers, and can be more uniformly dispersed since its density is a better match to that of iron. Machinability is improved because the heat generated by cutting is sufficient to form a thin film of liquid bismuth that lasts for only fractions of a microsecond. Tool life is noticeably extended and the machined product is still weldable.

The use of free-machining steels is not without compromise, however. Ductility and impact properties are somewhat reduced compared to the unmodified steels. Copper-based braze joints tend to embrittle when used to join bismuth free-machining steels, and the machining additions reduce the strength of shrink-fit assemblies. If these compromises are objectionable, other methods may be used to enhance machinability. For example, the machinability of steels can be improved by cold working the metal. As the strength and hardness of the metal increase, the metal loses ductility, and subsequent machining produces chips that tear away more readily and fracture into smaller segments.

PRECOATED STEEL SHEET

Traditional sheet metal fabrication involves the shaping of components from bare steel, followed by the finishing (or coating) of these products on a piece-by-piece basis. In this sequence, it is not uncommon for the finishing processes to be the most expensive and time-consuming stages of manufacture, since it involves handling, manipulation, and possible curing or drying, as well as adherence to the various EPA (environmental) and OSHA (safety and health) requirements.

An alternative to this procedure is to purchase mill-coated steel sheet, where the steel supplier applies the coating when the material is still in the form of a long, continuous strip. Cleaning, pretreatment, coating, and curing can all be performed in a continuous manner, producing a coating that is uniform in thickness and offers improved adhesion. Numerous coatings can be specified, including the entire spectrum of dipped and plated metals (including aluminum, zinc, and chromium), vinyls, paints, primers, and other polymers or organics. Many of these coatings are specially formulated to endure the rigors of subsequent forming and bending. The continuous sheets can also be printed, striped, or embossed to provide a number of visual effects. Extra caution must be exercised during handling and fabrication to prevent damage to the coating, but the additional effort and expense are often less than the cost of finishing individual pieces.

STEELS FOR ELECTRICAL AND MAGNETIC APPLICATIONS

Soft magnetic materials can be magnetized by relatively low-strength magnetic fields but lose almost all of their magnetism when the applied field is removed. They are widely used in products such as solenoids, transformers, motors, and generators. The most common soft magnetic materials are high-purity iron, low-carbon steels, iron–silicon electrical steels, amorphous ferromagnetic alloys, iron–nickel alloys, and soft ferrites (ceramic material).

In recent years, the *amorphous metals* have shown attractive electrical and magnetic properties. Since the material has no crystal structure, grains, or grain boundaries, (1) the magnetic domains can move freely in response to magnetic fields, (2) the properties are the same in all directions, and (3) corrosion resistance is improved. The high magnetic strength and low hysteresis losses offer the possibility of smaller, lighter-weight magnets. When used to replace silicon steel in power transformer cores, this material has the potential of reducing core losses by as much as 50%.

To exhibit permanent magnetism, materials must remain magnetized when removed from the applied field. While most permanent magnets are ceramic materials or complex metal alloys, cobalt alloy steels (containing up to 36% cobalt) may be specified for electrical equipment where high magnetic densities are required.

MARAGING STEELS

When superhigh strength is required from a steel, the *maraging* grades become a very attractive option. These alloys contain between 15 and 25% nickel, plus significant amounts of cobalt, molybdenum, and titanium, all added to a very low-carbon steel. They can be hot worked at elevated temperatures, machined, or cold worked in the air-cooled condition, and then aged to yield strengths in excess of 1725 MPa (250 ksi), with good residual elongation.

Maraging alloys are very useful in applications where ultra-high strength and good toughness are important. They can be welded, provided the welding is followed by the full solution and aging treatment. As might be expected from the large amount of alloy additions (over 30%) and multistep thermal processing, maraging steels are quite expensive and should be specified only when their outstanding properties are absolutely required.

STEELS FOR HIGH-TEMPERATURE SERVICE

As a general rule of thumb, plain-carbon steels should not be used at temperatures in excess of about 250°C (500°F). Conventional alloy steels extend this upper limit to around 350°C (650°F). Continued developments in areas such as missiles and jet aircraft, however, have increased the demand for metals that offer good strength characteristics, corrosion resistance, and creep resistance at operating temperatures in excess of 550°C (1000°F).

The high-temperature ferrous alloys tend to be low-carbon materials with less than 0.1% carbon. At their peak operating temperatures, 1000-hour rupture stresses tend to be quite low, often in the neighborhood of 50 MPa (7 ksi). While iron is also a major component of other high-temperature alloys, when the amounts fall below 50%, the metal is not generally classified as a ferrous material. High strength at high temperature usually requires the more expensive nonferrous materials that will be discussed in Chapter 7.

6.5 STAINLESS STEELS

Low-carbon steel with the addition of 4 to 6% chromium acquires good resistance to many of the corrosive media encountered in the chemical industry. This behavior is attributed to the formation of a strongly adherent iron chromium oxide on the surface. If more improved corrosion resistance and outstanding appearance are required, materials should be specified that use a superior oxide that forms when the amount of chromium in solution (excluding chromium carbides and other forms where the chromium is no longer available to react with oxygen) exceeds 12%. When damaged, this tough, adherent, corrosion-resistant oxide (which is only 1–2 nanometers thick) actually heals itself, provided oxygen is present, even in very small amounts. Materials that form this superior protective oxide are known as the *true stainless steels*.

Several classification schemes have been devised to categorize these alloys. The American Iron and Steel Institute groups the metals by chemistry and assigns a three-digit number that identifies the basic family and the particular alloy within that family. In this text, however, we will group these alloys into microstructural families, since it is the basic structure that controls the engineering properties of the metal. Table 6-6 presents the AISI designation scheme for stainless steels and correlates it with the microstructural families.

TABLE 6-6 AISI Designation Scheme for Stainless Steels

Series	Alloys	Structure
200	Chromium, nickel, manganese, or nitrogen	Austenitic
300	Chromium and nickel	Austenitic
400	Chromium and possibly carbon	Ferritic or martensitic
500	Low chromium (<12%) and possibly carbon	Martensitic

Chromium is a ferrite stabilizer; that is, the addition of chromium tends to increase the temperature range over which ferrite is the stable structure. With sufficient chromium and a low level of carbon, a corrosion-resistant iron alloy can be produced that is ferrite at all temperatures below solidification. These alloys are known as the *ferritic stainless steels*. They possess rather limited ductility and poor toughness but are readily weldable. No martensite can form in the welds because there is no possibility of forming the face-centered-cubic (FCC) austenite structure that can then transform during cooling. These alloys cannot be heat treated, and poor ductility limits the amount of strengthening by cold work. The primary source of strength is the body-centered-cubic (BCC) crystal structure combined with the effects of solid solution strengthening. Characteristic of BCC metals, the ferritic stainless steels exhibit a ductile-to-brittle transition as the temperature is reduced. The ferritic alloys are the cheapest type of stainless steel, however, and, as such, they should be given first consideration when a stainless alloy is required.

If increased strength is needed, the *martensitic stainless steels* should be considered. For these alloys, carbon is added and the chromium content is reduced to a level where the material can be austenite (FCC) at high temperature and ferrite (BCC) at low. The carbon can be dissolved in the face-centered-cubic austenite, which can then be quenched to trap it in a body-centered martensitic structure. The carbon contents can be varied up to 1.2% to provide a range of strengths and hardnesses. Caution should be taken, however, to ensure more than 12% chromium remains in solution. Slow cools may allow the carbon and chromium to react and form chromium carbides. When this occurs, the chromium is not available to react with oxygen and form the protective oxide. As a result, the martensitic stainless steels may only exhibit good corrosion resistance when in the martensitic condition (when the chromium is trapped in atomic solution) and may be susceptible to red rust when annealed or normalized for machining or fabrication. The martensitic stainless steels cost about $1\frac{1}{2}$ times as much as the ferritic alloys, with part of the increase being due to the additional heat treatment, which generally consists of an austenitization, quench, stress relief, and temper. They are less corrosion resistant than the other varieties and tend to be used when strength and hardness are the dominant requirements.

Nickel is an austenite stabilizer; with sufficient amounts of both chromium and nickel (and low carbon), it is possible to produce a stainless steel in which austenite is the stable structure from elevated to cryogenic temperatures. Known as *austenitic stainless steels*, these alloys may cost two to three times as much as the ferritic variety, but here the added expense is attributed to the cost of the nickel and chromium alloys. Manganese and nitrogen are also austenite stabilizers and may be substituted for some of the nickel to produce a lower-cost, somewhat lower-quality austenitic stainless steel (the AISI 200-series).

Austenitic stainless steels are easily identified by their nonmagnetic characteristic (the ferritic and martensitic stainlesses are attracted to a magnet). They are highly resistant to corrosion in almost all media (except hydrochloric acid and other halide acids and salts) and may be polished to a mirror finish, thereby combining attractive appearance and corrosion resistance. Formability is outstanding (characteristic of the FCC crystal structure), and these steels strengthen significantly when cold worked. The following table shows the response of the popular 304 alloy (also known as 18-8 because of the composition of 18% chromium and 8% nickel) to a small amount of cold work:

	Water Quench	Cold Rolled 15%
Yield strength [MPa (ksi)]	260 (38)	805 (117)
Tensile strength [MPa (ksi)]	620 (90)	965 (140)
Elongation in 2 in. (%)	68	11

The austenitic stainless steels offer the best combination of corrosion resistance and toughness of the stainless varieties. Since they are also some of the most costly, they should not be specified where the less expensive ferritic or martensitic alloys would be adequate or where a true stainless steel is not required. Figure 6-10 lists some of the popular alloys from each of the three major structural classifications and schematically denotes some of their key properties. Table 6-7 shows the basic types and the primary mechanism of strengthening.

TABLE 6-7 Primary Strengthening Mechanism for the Various Types of Stainless Steel

Type of Stainless Steel	Primary Strengthening Mechanism
Ferritic	Solid-solution strengthening
Martensitic	Phase transformation strengthening (martensite)
Austenitic	Cold work (deformation strengthening)

A fourth and special class of stainless steels is the *precipitation-hardening* variety. These alloys are basically martensitic or austenitic types, modified by the addition of alloying elements such as aluminum that permit the precipitation of hard intermetallic compounds at the temperatures used to temper martensite. With the addition of age hardening, these materials are capable of attaining high-strength properties such as a 1790-MPa (260-ksi) yield strength, 1825-MPa (265-ksi) tensile strength, and a 2% elongation. Since the additional alloys and extra processing make the precipitation-hardening alloys some of the most expensive stainless steels, they should be used only when their high-strength feature is absolutely required.

While the four structures described above constitute the bulk of stainless steels, there are also some additional variants. *Duplex stainless steels* contain between 18 and 25% chromium, 4 to 7% nickel, and up to 4% molybdenum; they can be water quenched

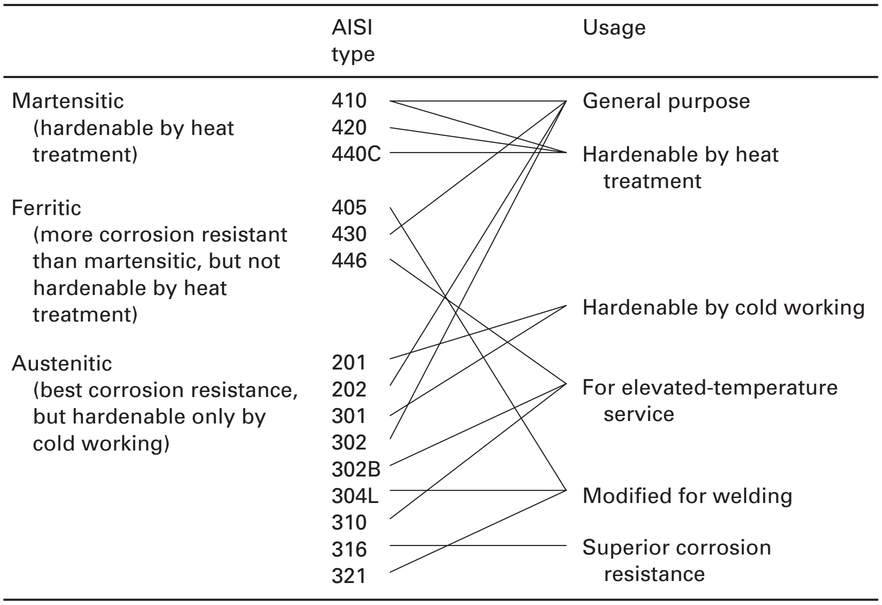

FIGURE 6-10 Popular alloys and key properties for different types of stainless steels.

from a hot-working temperature to produce a microstructure that is approximately half ferrite and half austenite. This mixed structure offers a higher yield strength and greater resistance to stress corrosion cracking and pitting corrosion than either the full-austenitic or full-ferritic grades.

Since stainless steels are difficult to machine because of their work-hardening properties and their tendency to seize during cutting, special *free-machining alloys* have been produced within each family. Additions of sulfur or selenium can raise machinability to approximately that of a medium-carbon steel.

Cast stainless steels have structures and properties that are similar to the wrought grades but are specified by the designations of the Alloy Casting Institute. The C series, used primarily to impart corrosion resistance, are used in valves, pumps, and fittings. The H grades (heat-resistant), designed to provide useful properties at elevated temperature, are used for furnace parts and turbine components.

Several potential problems are unique to the family of stainless steels. Since the protective oxide provides the excellent corrosion resistance, this feature can be lost whenever the amount of chromium in solution drops below 12%. A localized depletion of chromium can occur when elevated temperatures allow chromium carbides to form along grain boundaries (*sensitization*). To prevent their formation, one can keep the carbon content of stainless steels as low as possible, usually below 0.10%. Another method is to tie up existing carbon with small amounts of stabilizing elements, such as titanium or niobium, that have a stronger affinity for carbon than does chromium. Rapidly cooling these metals through the carbide-forming range of 480° to 820°C (900° to 1500°F) also works to prevent carbide formation.

Another problem with high-chromium stainless steels is an embrittlement that can occur after long times at elevated temperatures. This is attributed to the formation of a brittle compound that forms at elevated temperature and coats grain boundaries. Known as *sigma phase*, this material then provides a brittle crack path through the metal. Stainless steels used in high-temperature service should be checked periodically to detect and monitor sigma-phase formation.

6.6 TOOL STEELS

Tool steels are high-carbon, high-strength, ferrous alloys that have been modified by alloy additions to provide a desired balance of strength, toughness, and wear resistance when properly heat treated. Several classification systems have been developed, some using chemistry as a basis and others employing hardening method or major mechanical property. The AISI system uses a letter designation to identify basic features such as quenching method, primary application, special alloy or characteristic, or specific industry

TABLE 6-8 Basic Types of Tool Steel and Corresponding AISI Grades

Type	AISI Grade	Significant Characteristic
1. Water-Hardening	W	
2. Cold-work	O	Oil-hardening
	A	Air-hardening medium alloy
	D	High-carbon–high-chromium
3. Shock-resisting	S	
4. High-speed	T	Tungsten alloy
	M	Molybdenum alloy
5.Hot-work	H	H1–H19: chromium alloy H20–H39: tungsten alloy H40–H59: molybdenum alloy
6. Plastic-mold	P	
7. Special-purpose	L	Low alloy
	F	Carbon–tungsten

involved. Table 6-8 lists seven basic families of tool steels, the corresponding AISI letter grades, and the associated feature or characteristic. Individual alloys within the letter grades are then listed numerically to produce a letter–number identification system.

Water-hardening tool steels (W grade) are essentially high-carbon plain-carbon steels. They are the least expensive variety and are used for a wide range of parts that are usually quite small and not subject to severe usage or elevated temperature. Because strength and hardness are functions of the carbon content, a wide range of properties can be achieved through composition variation. Hardenability is low, so these steels must be quenched in water to attain high hardness. They can be used only for relatively thin sections if the full depth of hardness is desired. They are also rather brittle, particularly at higher hardness.

Typical uses of the various plain-carbon steels are as follows:

0.60–0.75% carbon: machine parts, chisels, setscrews, and similar products where medium hardness is required, coupled with good toughness and shock resistance

0.75–0.90% carbon: forging dies, hammers, and sledges

0.90–1.10% carbon: general-purpose tooling applications that require a good balance of wear resistance and toughness, such as drills, cutters, shear blades, and other heavy-duty cutting edges

1.10–1.30% carbon: small drills, lathe tools, razor blades, and other light-duty applications in which extreme hardness is required without great toughness

In applications where improved toughness is required, small amounts of manganese, silicon, and molybdenum are often added. Vanadium additions of about 0.20% are used to form strong, stable carbides that retain fine grain size during heat treatment. One of the main weaknesses of the plain-carbon tool steels is their loss of hardness at elevated temperature, which can occur with prolonged exposure to temperatures over 150°C (300°F).

When larger parts must be hardened or distortion must be minimized, the *cold-work tool steels* are usually recommended. The alloy additions and higher hardenability of the *oil-* or *air-hardening grades* (O and A designations, respectively) enable hardening by less severe quenches. Tighter dimensional tolerances can be maintained during heat treatment, and the cracking tendency is reduced. The *high-chromium tool steels,* designated by the letter *D*, contain between 10 and 18% chromium, and are also air-hardening and offer outstanding deep-hardening wear resistance. Blanking, stamping, and cold-forming dies, punches, and other tools for large production runs are all common applications for this class. Because these steels do not have the alloy content necessary to resist softening at elevated temperatures, they should not be used for applications that involve prolonged service at temperatures in excess of 250°C (500°F).

Shock-resisting tool steels (S designation) offer the high toughness needed for impact applications. Low carbon content (approximately 0.5% carbon) is usually specified to assure the necessary toughness, with carbide-forming alloys providing the necessary abrasion resistance, hardenability, and hot-work characteristics. Applications include parts for pneumatic tooling, chisels, punches, and shear blades.

High-speed tool steels are used for cutting tools and other applications where strength and hardness must be retained at temperatures up to or exceeding red-heat (about 760°C or 1400°F). One popular member of the tungsten high-speed tool steels (T designation) is the T1 alloy, which contains 0.7% carbon, 18% tungsten, 4% chromium, and 1% vanadium. It offers a balanced combination of shock resistance and abrasion resistance and is used for a wide variety of cutting applications. The molybdenum high-speed steels (M designation) were developed to reduce the amount of tungsten and chromium required to produce the high-speed properties.

Hot-work tool steels (H designation) were developed to provide strength and hardness during prolonged exposure to elevated temperature. All employ substantial additions of carbide-forming alloys. H1 to H19 are chromium-based alloys with about 5.0% chromium; H20 to H39 are tungsten-based types with 9 to 18% tungsten coupled with 3 to 4% chromium; and H20 to H59 are molybdenum-based. The chromium types tend to be less expensive than the tungsten or molybdenum alloys.

Other types of tool steels include (1) the *plastic mold steels* (P designation), designed to meet the requirements of zinc die casting and plastic injection molding dies; (2) the *low-alloy special-purpose tool steels* (L designation), such as the L6 extreme toughness variety; and (3) the *carbon–tungsten type* of special-purpose tool steels (F designation), which are water hardening but substantially more wear-resistant than the plain-carbon tool steels.

Most tool steels are wrought materials, but some are designed specifically for fabrication by casting. Powder metallurgy processing has also been used to produce special compositions that are difficult or impossible to produce by wrought or cast methods or provide key structural enhancements. By subjecting the water-atomized powders to hot-isostatic pressing (HIP), 100%-dense billets can be produced with fine grain size and small, uniformly distributed carbide particles. These materials offer superior wear resistance compared to conventional tool steels, combined with useful levels of toughness.

6.7 ALLOY CAST STEELS AND IRONS

The effects of alloying elements are the same regardless of the process used to produce the final shape. When the desired shape is to be made by casting, some alloys can be used to enhance process-specific features, such as fluidity and as-solidified properties. If a ferrous casting alloy contains less than about 2.0% carbon, it is considered to be a *cast steel*. Alloys with more than 2% carbon are *cast irons*.

Most cast irons are used in the as-cast condition, with the only heat treatment being a stress relief or annealing. For these applications, the alloy elements are selected for their ability to alter properties by (1) affecting the formation of graphite or cementite, (2) modifying the morphology of the carbon-rich phase, (3) strengthening the matrix material, or (4) enhancing wear resistance through the formation of alloy carbides. Nickel, for example, promotes graphite formation and tends to promote finer graphite structures. Chromium retards graphite formation and stabilizes cementite. These alloys are frequently used together in a ratio of two or three parts of nickel to one part of chromium. Between 0.5 and 1.0% molybdenum is often added to gray cast iron to impart additional strength, form alloy carbides, and help to control the size of the graphite flakes.

High-alloy cast irons have been designed to provide enhanced corrosion resistance and/or good elevated-temperature service. Within this family, the austenitic gray cast irons, which contain about 14% nickel, 5% copper, and 2.5% chromium, offer good corrosion resistance to many acids and alkalis at temperatures up to about 800°C (1500°F). Alloy cast irons and cast steels are usually specified by their ASTM designation numbers, which relate the materials to their mechanical properties and intended service applications. The Society of Automotive Engineers also has specifications for cast steels used in the automotive industry.

Cast steels are generally used whenever a cast iron is not adequate for the application. Compared to cast irons, the cast steels offer enhanced stiffness, toughness, and ductility over a wide range of operating temperatures and can be readily welded. They are usually heat treated to produce a final quenched-and-tempered structure, and the alloy additions are selected to provide the desired hardenability and balance of properties. The enhanced properties come with a price, however, since the cast steels have a higher melting point (more energy to melt and higher cost refractories are necessary), less fluidity (leading to increased probability of incomplete die or mold filling), and increased shrinkage (since graphite is not formed during solidification). The diverse applications take advantage of the material's structural strength and its ability to contain pressure, resist impacts, withstand elevated temperatures, and resist wear.

■ Key Words

- advanced high-strength steel (AHSS)
- air-hardenable tool steel
- AISI–SAE designation
- alloy steel
- amorphous metals
- austenitic stainless steel
- bake-hardenable steel
- cast iron
- cast steel
- cold-work tool steel
- continuous casting
- degassification
- deoxidation
- dual-phase steels
- duplex stainless steel
- electroslag remelting
- ferritic stainless steel
- ferrous metals
- free-machining steel
- high-carbon steel
- high-speed tool steel
- high-strength low-alloy steel (HSLA)
- hot-work tool steel
- iron
- ladle metallurgy
- ladles
- low-carbon steel
- maraging steel
- martensitic stainless steel
- medium-carbon steel
- microalloyed steel
- oil-hardenable tool steel
- pig iron
- plain-carbon steel
- precipitation-hardenable stainless steel
- precoated steel
- sensitization
- shock-resisting tool steel
- sigma phase
- solidification shrinkage
- stainless steel
- steel
- tool steel
- TRIP steels (transformation-induced plasticity)
- vacuum arc remelting
- vacuum degassing
- vacuum induction melting
- water-hardenable tool steel

■ Review Questions

1. Why might it be important to know the prior processing history of an engineering material?
2. What is a ferrous material?
3. How does the recycling of steel compare with the recycling of aluminum?
4. What properties or characteristics have made steel such an attractive engineering material?
5. When iron ore is reduced to metallic iron, what other elements are generally present in the metal?
6. How does steel differ from pig iron?
7. What are some of the modification processes that can be performed on a steel during ladle metallurgy operations?
8. What is the advantage of pouring molten metal from the bottom of a ladle?
9. What are some of the attractive economic and processing advantages of continuous casting?
10. What are some of the techniques used to reduce the amount of dissolved oxygen in molten steel?
11. How might other gases, such as nitrogen and hydrogen, be reduced?
12. What are some of the attractive features of electroslag remelting?
13. What is plain-carbon steel?
14. What is considered a low-carbon steel? Medium-carbon? High-carbon?
15. What properties account for the high-volume use of medium-carbon steels?
16. Why should plain-carbon steels be given first consideration for applications requiring steel?
17. What are some of the common alloy elements added to steel?
18. For what different reasons might alloying elements be added to steel?
19. What are some of the alloy elements that tend to form stable carbides within a steel?
20. What alloys are particularly effective in increasing the hardenability of steel?
21. What is the significance of the last two digits in a typical four-digit AISI–SAE steel designation?
22. How are letters incorporated into the AISI–SAE designation system for steel, and what do some of the more common ones mean?
23. What is an H-grade steel, and when should it be considered in a material specification?
24. Why should the proposed fabrication processes enter into consideration when selecting a steel?
25. How are the final properties usually obtained in the constructional alloy steels? In the HSLA steels?
26. How are HSLA steels specified?
27. What are microalloyed steels?
28. What are some of the potential benefits that may be obtained through the use of microalloyed steels?
29. What is the primary attraction of the bake-hardenable steels?
30. What are advanced high-strength steels (AHSS)?
31. What are the two phases that are present in dual-phase steels?
32. What is the "transformation" that occurs during the deformation of the "transformation-induced plasticity (TRIP) steels?
33. What are some of the various alloy additions that have been used to improve the machinability of steels?
34. What are some of the compromises associated with the use of free-machining steels?
35. What factors might be used to justify the added expense of precoated steel sheet?
36. Why have the amorphous metals attracted attention as potential materials for magnetic applications?

37. What are maraging steels, and for what conditions might they be required?
38. What are the typical elevated temperature limits of plain-carbon and alloy steels?
39. What is a stainless steel?
40. What feature is responsible for the observed corrosion resistance of stainless steels?
41. Why should ferritic stainless steels be given first consideration when selecting a stainless steel?
42. Which of the major types of stainless steel is likely to contain significant amounts of carbon? Why?
43. Under what conditions might a martensitic stainless steel "rust" when exposed to a hostile environment?
44. What are some of the unique properties of austenitic stainless steels?
45. How can an austenitic stainless steel be easily identified?
46. What two structures are present in a duplex stainless steel?
47. What is sensitization of a stainless steel, and how can it be prevented?
48. What is a tool steel?
49. How does the AISI–SAE designation system for tool steels differ from that for plain-carbon and alloy steels?
50. For what types of applications might an air-hardenable tool steel be attractive?
51. What alloying elements are used to produce the hot-worked tool steels?
52. What are some of the reasons that alloy additions are made to cast irons that will be used in their as-cast condition?
53. When should a cast steel be used instead of a cast iron?

www.wiley.com/college/degarmo

Chapter 6 CASE STUDY

Interior Tub of a Top-Loading Washing Machine

The interior tub of a washing machine is the container that holds the clothes during the washing and rinsing cycles, but it also contains the perforations that permit removal of the water by draining and spinning. The component will see mechanical loadings from the weight of the clothes and water, and also the dynamic action of spinning water-laden fabrics. There will be exposure to a wide range of water quality, as well as the full spectrum of soaps, detergents, bleaches, and other laundry additives. The surfaces should also be resistant to the impact and abrasion of buttons, zippers, and snaps.

This part has traditionally been manufactured by the sequential deep drawing, perforating, and trimming of metal sheet, followed by some form of surface-coating treatment. For a long time, the standard material was "enameling iron"—a steel sheet with less than 0.03% carbon that was then coated with a fired porcelain enamel. Due to the difficulties of producing ultra-low-carbon material in today's steelmaking operations, enameling iron became increasingly scarce, and manufacturers were forced to substitute the lowest-carbon, most readily available material, namely 1008 steel. This substitution further required modification of the enameling process to prevent defects and blistering from CO evolution.

Your employer is presently manufacturing these tubs from 1008 steel sheet with a subsequent coating of fired porcelain enamel. Your marketing staff, however, reports that consumers tend to view a stainless steel tub to be of higher quality. As a result, your supervisor has asked you to evaluate the merits of converting to this material. You must first familiarize yourself with the current product (the base material, the forming process, and the porcelain enameling), and then determine what might be involved in converting to stainless steel. Consider the following specific questions:

1. What are the obvious pros and cons of the present product and process? Where would you expect most problems to occur in the current manufacturing process? Which aspects of fabrication are likely to be the most costly?
2. What would be the pros and cons of converting to stainless steel? In what ways would the product be superior? Are there any assets or liabilities associated with product fabrication from stainless material?
3. Which stainless steel would you recommend? Begin by considering the basic types (ferritic, austenitic, and martensitic) and then refine your selection to a specific alloy if possible. Discuss the rationale for your selection.
4. Since deep drawing is a metal deformation process, we could use cold working (strain hardening) as a strengthening mechanism. Would you find this to be attractive, or would you prefer to use a recrystallization anneal after drawing and prior to use? Why? If you elect to use cold work, might you want to at least perform a stress-relief heat treatment prior to use? Could this be done and still preserve the deformation strengthening? In deep drawing, the deformation is not uniform (increasing as we move up the sidewalls of the container), and the bottom of the tub simply retains the properties of the starting sheet. In order to ensure a minimum amount of strength at all locations, it may be desirable to begin the drawing with a partially cold-rolled sheet. Do you find this suggestion to be desirable? Why or why not?
5. After drawing and perforating, the residual drawing lubricant is removed from the part. Would any additional surface treatment be required? What would be your recommendation?

CHAPTER 7

Nonferrous Metals and Alloys

7.1 Introduction

Nonferrous metals and alloys have assumed increasingly important roles in modern technology. Because of their number and the fact that their properties vary widely, they provide an almost limitless range of properties for the design engineer. While they tend to be more costly than iron or steel, these metals often possess certain properties or combinations of properties that are not available in the ferrous metals, such as:

1. Resistance to corrosion
2. Ease of fabrication
3. High electrical and thermal conductivity
4. Light weight
5. Strength at elevated temperatures
6. Color

Nearly all the nonferrous alloys possess at least two of the qualities listed above, and some possess nearly all. For many applications, specific combinations of these properties are highly desirable. Each year, the average American requires about 65 pounds of aluminum, 21 pounds of copper, 12 pounds of lead, 11 pounds of zinc, and 25 pounds of various other nonferrous metals. Figure 7-1 classifies some of the nonferrous metals by advantageous engineering properties, and Table 7-1 shows the increasing role of the nonferrous metals in a typical family vehicle.

TABLE 7-1 The Material Content of a Typical Family Vehicle (in pounds)

Material	1978	1990	2002
Steel	2103	1682.5	1757
Stainless steel	26	34	56.5
Cast iron	512	454	328
Plastics	180	229	255
Aluminum	112.5	158.5	279.5
Copper	37	48.5	50
Zinc	31	18.5	8.5
Magnesium	1	3	9.5
Powder metal	15.5	24	40.5
Other materials	551.5	488.5	573
Total	3569.5	3140.5	3357.5

As a whole, the strength of the nonferrous alloys is generally inferior to that of steel. Also, the modulus of elasticity is usually lower, a fact that places them at a distinct disadvantage when stiffness is a required characteristic. Ease of fabrication is often attractive. Those alloys with low melting points are easy to cast in sand molds, permanent molds, or dies. Many alloys have high ductility coupled with low yield points, the ideal combination for cold working. Good machinability is also characteristic of many nonferrous

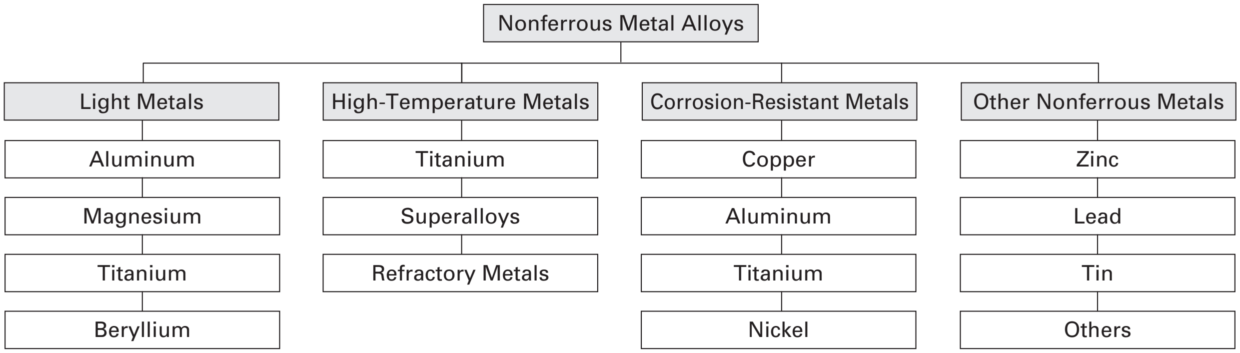

FIGURE 7-1 Some common nonferrous metals and alloys, classified by attractive engineering property.

alloys. The savings obtained through ease of fabrication can often overcome the higher cost of the nonferrous material and justify its use in place of steel. Weldability is the one fabrication area where the nonferrous alloys tend to be somewhat inferior to steel. With modern joining techniques, however, it is generally possible to produce satisfactory weldments in all of the nonferrous metals.

■ 7.2 COPPER AND COPPER ALLOYS

GENERAL PROPERTIES AND CHARACTERISTICS

Copper has been an important engineering metal for over 6000 years. As a pure metal, it has been the backbone of the electrical industry. It is also the base metal of a number of alloys, generically known as brasses and bronzes. Compared to other engineering materials, copper and copper alloys offer three important properties: (1) *high electrical and thermal conductivity*, (2) *useful strength with high ductility*, and (3) *corrosion resistance* to a wide range of media. Because of its excellent conductivity, about one-third of all copper produced is used in some form of electrical application, such as the commutators shown in Figure 7-2. Other large areas of use include plumbing, heating, and air conditioning.

FIGURE 7-2 Copper and copper alloys are used for a variety of electrical applications, such as these electrical commutators. *(Courtesy of The Electric Materials Company, North East, PA.)*

Pure copper in its annealed state has a tensile strength of only about 200 MPa (30 ksi), with an elongation of nearly 60%. Through cold working, the tensile strength can be more than doubled to over 450 MPa (65 ksi), with a decrease in elongation to about 5%. Because of its relatively low strength and high ductility, copper is a very desirable metal for applications where extensive forming is required. Since the recrystallization temperature for copper is less than 260°C (500°F), the hardening effects of cold working can also be easily removed. Copper and copper alloys lend themselves nicely to the whole spectrum of fabrication processes, including casting, machining, joining, and surface finishing by either plating or polishing.

Unfortunately, copper is *heavier than iron*. While strength can be quite high, the strength-to-weight ratio for copper alloys is usually less than that for the weaker aluminum and magnesium materials. In addition, problems can occur when copper is used at elevated temperature. Copper alloys tend to soften when heated above 220°C (400°F), and if copper is stressed for a long period of time at high temperature, intercrystalline failure can occur at about half of its normal room-temperature strength. While offering good resistance to adhesive wear, copper and copper alloys have poor abrasive wear characteristics.

The low-temperature properties of copper are quite attractive, however. Strength tends to increase as temperatures drop, and the material does not embrittle, retaining attractive ductility even under cryogenic conditions. Conductivity also tends to increase with a drop in temperature.

Copper and copper alloys respond well to strengthening methods, with the strongest alloy being 15 to 20 times stronger than the weakest. Because of the wide range of properties, the material can often be tailored to the specific needs of a design. Elastic stiffness is between 50 and 60% of steel. Additional features include being nonmagnetic, nonpyrophoric (slivers or particles do not burn in air — i.e., nonsparking), and nonbiofouling (inhibits marine organism growth), as well as offering a wide spectrum of colors, including yellow, red, brown, and silver.

COMMERCIALLY PURE COPPER

Refined copper containing between 0.02 and 0.05% oxygen is called *electrolytic tough-pitch* (ETP) copper. It is often used as a base for copper alloys and may be used for electrical applications, such as wire and cable, when the highest conductivity is not required. For superior conductivity, additional refining can reduce the oxygen content and produce *oxygen-free high-conductivity* (OFHC) copper. The better grades of conductor copper now have a conductivity rating of about 102% IACS, reflecting metallurgical improvements made since 1913, when the International Annealed Copper Standard (IACS) was established and the conductivity of pure copper was set at 100% IACS.

COPPER-BASED ALLOYS

As a pure metal, copper is not used extensively in manufactured products, except in electrical applications, and even here alloy additions of silver, arsenic, cadmium, and zirconium are used to enhance various properties without significantly impairing conductivity. More often, copper is the base metal for an alloy, where it imparts its good ductility, corrosion resistance, and electrical and thermal conductivity. A full spectrum of mechanical properties is available, ranging from pure copper, which is soft and ductile, through alloys whose properties can rival those of quenched-and-tempered steel.

Copper-based alloys are commonly designated using a system of numbers standardized by the Copper Development Association (CDA). Table 7-2 presents a breakdown of this system, which has been further adopted by the American Society for Testing and Materials (ASTM), the Society of Automotive Engineers (SAE), and the U.S. government. Alloys numbered from 100 to 199 are mostly copper with less than 2% alloy addition. Numbers 200 to 799 are *wrought*[1] alloys, and the 800 and 900 series are *casting alloys*. When converted to the Unified Numbering System for metals and alloys, the three-digit numbers are converted to five digits by placing two zeros at the end, and the letter *C* is used as a prefix to denote the copper base.

COPPER–ZINC ALLOYS

Zinc is by far the most popular alloying addition, and the resulting alloys are generally known as some form of *brass*. If the zinc content is less than 36%, the brass is a single-phase solid solution. Since this structure is identified as the alpha phase, these alloys are

TABLE 7-2 Designation System for Copper and Copper Alloys (Copper Development Association System)

	Wrought Alloys		Cast Alloys
100–155	Commercial coppers	833–838	Red brasses and leaded red brasses
162–199	High-copper alloys	842–848	Semired brasses and leaded semired brasses
200–299	Copper–zinc alloys (brasses)	852–858	Yellow brasses and leaded yellow brasses
300–399	Copper–zinc–lead alloys (leaded brasses)	861–868	Manganese and leaded manganese bronzes
400–499	Copper–zinc–tin alloys (tin brasses)	872–879	Silicon bronzes and silicon brasses
500–529	Copper–tin alloys (phosphor bronzes)	902–917	Tin bronzes
532–548	Copper–tin–lead alloys (leaded phosphor bronzes)	922–929	Leaded tin bronzes
600–642	Copper–aluminum alloys (aluminum bronzes)	932–945	High-leaded tin bronzes
647–661	Copper–silicon alloys (silicon bronzes)	947–949	Nickel–tin bronzes
667–699	Miscellaneous copper–zinc alloys	952–958	Aluminum bronzes
700–725	Copper–nickel alloys	962–966	Copper nickels
732–799	Copper–nickel–zinc alloys (nickel silvers)	973–978	Leaded nickel bronzes

---

[1] The term *wrought* means “shaped or fabricated in the solid state.” Key properties for wrought material generally relate to ductility. *Cast* alloys are shaped as a liquid, where the attractive features include low melting point, high fluidity, and good as-solidified strength.

often called *alpha brasses*. They are quite ductile and formable, with both strength and ductility increasing with the zinc content up to about 36%. The alpha brasses can be strengthened significantly by cold working and are commercially available in various degrees of cold-worked strength and hardness. Cartridge brass, the 70% copper–30% zinc alloy, offers the best overall combination of strength and ductility. As its name implies, it has become a popular material for sheet-forming operations like deep drawing.

With more than 36% zinc, the copper–zinc alloys enter a two-phase region involving a brittle, zinc-rich phase, and ductility drops markedly. While cold-working properties are rather poor for these high-zinc brasses, deformation can be performed easily at elevated temperature.

Many applications of these alloys result from the high electrical and thermal conductivity coupled with useful engineering strength. The wide range of colors (red, orange, yellow, silver, and white), enhanced by further variations that can be produced through the addition of a third alloy element, account for a number of decorative uses. Since the plating characteristics are excellent, the material is also a frequently used base for decorative chrome or similar coatings. Another attractive property of alpha brass is its ability to have rubber vulcanized to it without any special treatment except thorough cleaning. As a result, brass is widely used in mechanical rubber goods.

Most brasses have good corrosion resistance. In the range of 0 to 40% zinc, the addition of a small amount of tin imparts improved resistance to seawater corrosion. Cartridge brass with tin becomes admiralty brass, and the 40% zinc Muntz metal with a tin addition is called naval brass. Brasses with 20 to 36% zinc, however, are subject to a selective corrosion, known as *dezincification*, when exposed to acidic or salt solutions. Brasses with more than 15% zinc often experience *season cracking* or *stress–corrosion cracking*. Both stress and exposure to corrosive media are required for this failure to occur (but residual stresses and atmospheric moisture may be sufficient!). As a result, cold-worked brass is usually stress relieved (to remove the residual stresses) before being placed in service.

When high machinability is required, as with automatic screw-machine stock, 2 to 3% lead can be added to the brass to ensure the formation of free-breaking chips. Brass casting alloys are quite popular for use in plumbing fixtures and fittings, low-pressure valves, and a variety of decorative hardware. They have good fluidity during pouring and attractive low melting points. An alloy containing between 50 and 55% copper and the remainder zinc is often used as a filler metal in brazing. It is an effective material for joining steel, cast iron, brasses, and copper, producing joints that are nearly as strong as those obtained by welding.

Table 7-3 lists some of the more common copper–zinc alloys and their composition, properties, and typical uses.

COPPER–TIN ALLOYS

Since tin is more costly than zinc, alloys of copper and tin, commonly called *tin bronzes*, are usually specified when they offer some form of special property or characteristic. The term *bronze* is often confusing, however, since it can be used to designate any copper alloy where the major alloy addition is not zinc or nickel. To provide clarification, the major alloy addition is usually included in the designation name.

The tin bronzes usually contain less than 12% tin. (Strength continues to increase as tin is added up to about 20%, but the high-tin alloys tend to be brittle.) Tin bronzes offer good strength, toughness, wear resistance, and corrosion resistance. They are often used for bearings, gears, and fittings that are subjected to heavy compressive loads. When the copper–tin alloys are used for bearing applications, up to 10% lead is frequently added.

The most popular wrought alloy is phosphor bronze, which usually contains from 1 to 11% tin. Alloy 521 (CDA), with 8% tin, is typical of this class. Hard sheet has a tensile strength of 760 MPa (110 ksi) and an elongation of 3%. Soft sheet has a tensile strength of 380 MPa (55 ksi) and 65% elongation. The material is often specified for pump parts, gears, springs, and bearings.

TABLE 7-3 Composition, Properties, and Uses of Some Common Copper–Zinc Alloys

		Composition(%)						Tensile Strength			
CDA Number	Common Name	Cu	Zn	Sn	Pb	Mn	Condition	ksi	MPa	Elongation in 2 in. (%)	Typical Uses
220	Commercial bronze	90	10				Soft sheet	38	262	45	Screen wire, hardware, screws. jewelry
							Hard sheet	64	441	4	
							Spring	73	503	3	Drawing, architectural work, ornamental
240	Low brass	80	20				Annealed sheet	47	324	47	
							Hard	75	517	7	
							Spring	91	627	3	Munitions, hardware, musical instruments, tubing
260	Cartridge brass	70	30				Annealed sheet	53	365	54	
							Hard	76	524	7	
							Spring	92	634	3	Cold forming, radiator cores, springs, screws
270	Yellow brass	65	35				Annealed sheet	46	317	64	
							Hard	76	524	7	
280	Muntz metal	60	40				Hot-rolled	54	372	45	Architectural work; condenser tube
							Cold-rolled	80	551	5	
443–445	Admiralty metal	71	28	1			Soft	45	310	60	Condenser tube (salt water), heat exchangers
							Hard	95	655	5	
360	Free-cutting brass	61.5	35.3		3		Soft	47	324	60	Screw-machine parts
							Hard	62	427	20	
675	Manganese bronze	58.5	39	1		0.1	Soft	65	448	33	Clutch disks, pump rods, valve stems, high-strength propellers
							Bars, half hard	84	579	19	

Alloy 905 is a bronze casting alloy containing 10% tin and 2% zinc. In the as-cast condition, the tensile strength is about 310 MPa (45 ksi), with an elongation of 45%. It has very good resistance to seawater corrosion and is used on ships for pipe fittings, gears, pump parts, bushings, and bearings.

Bronzes can also be made by mixing powders of copper and tin, followed by low-density powder metallurgy processing (described in Chapter 19). The porous product can be used as a filter for high-temperature or corrosive media, or it can be infiltrated with oil to produce self-lubricating bearings.

COPPER–NICKEL ALLOYS

Copper and nickel exhibit complete solubility (as shown previously in Figure 4-6), and a wide range of useful alloys have been developed. Key features include high thermal conductivity, high-temperature strength, and corrosion resistance to a range of materials, including seawater. These properties, coupled with a high resistance to stress–corrosion cracking, make the copper–nickel alloys a good choice for heat exchangers, cookware, desalination apparatus, and a wide variety of coinage. *Cupronickels* contain 2 to 30% nickel. *Nickel silvers* contain no silver, but 10 to 30% nickel and at least 5% zinc. The bright silvery luster makes them attractive for ornamental applications, and they are also used for musical instruments. An alloy with 45% nickel is known as *constantan*, and the 67%-nickel material is called *Monel*. Monel will be discussed later in the chapter as a nickel alloy.

OTHER COPPER-BASED ALLOYS

The copper alloys discussed previously acquire their strength primarily through solid-solution strengthening and cold work. Within the copper-alloy family, alloys containing aluminum, silicon, or beryllium can be strengthened by precipitation hardening.

Aluminum–bronze alloys are best known for their combination of high strength and excellent corrosion resistance, and they are often considered to be cost-effective alternatives to stainless steel and nickel-based alloys. The wrought alloys can be strengthened by solid-solution strengthening, cold work, and the precipitation of iron- or nickel-rich phases. With less than 8% aluminum, the alloys are very ductile. When aluminum exceeds 9%, however, the ductility drops and the hardness approaches that of steel. Still higher aluminum contents result in brittle, but wear-resistant, materials. By varying the aluminum content and heat treatment, the tensile strength can range from about 415 to 1000 MPa (60 to 145 ksi). Typical applications include marine hardware, power shafts, sleeve bearings, and pump and valve components for handling seawater, sour mine water, and various industrial fluids. Cast alloys are available for applications where casting is the preferred means of manufacture. Since aluminum bronze exhibits large amounts of solidification shrinkage, castings made of this material should be designed with this in mind.

Silicon–bronzes contain up to 4% silicon and 1.5% zinc (higher zinc contents may be used when the material is to be cast). Strength, formability, machinability, and corrosion resistance are all quite good. Tensile strengths range from a soft condition of about 380 MPa (55 ksi) through a maximum that approaches 900 MPa (130 ksi). Uses include boiler, tank, and stove applications, which require a combination of weldability, high strength, and corrosion resistance.

Copper–beryllium alloys, which ordinarily contain less than 2% beryllium, can be age hardened to produce the highest strengths of the copper-based metals but are quite expensive to use. When annealed, the material has a yield strength of 170 MPa (25 ksi), tensile strength of 480 MPa (70 ksi), and an elongation of 50%. After heat treatment, these properties can rise to 1100 MPa (160 ksi), 1250 MPa (180 ksi), and 5%, respectively. Cold work coupled with age hardening can produce even stronger material. The modulus of elasticity is about 125,000 MPa (8×10^6 psi), and the endurance limit is around 275 MPa (40 ksi). These properties make the material an excellent choice for electrical contact springs, but cost limits application to small components requiring long life and high reliability. Other applications, such as spark-resistant safety tools and spot-welding electrodes, utilize the unique combination of properties: (1) the material has the strength of heat-treated steel, but is also (2) nonsparking, nonmagnetic, and electrically and thermally conductive. Concerns over the toxicity of beryllium have created a demand for substitute alloys with similar properties, but no clear alternative has emerged.

LEAD-FREE CASTING ALLOYS

For many years, lead has been a common alloy additive to cast copper alloys. It helped to fill and seal the microporosity that forms during solidification, thereby providing the pressure tightness required for use with pressurized gases and fluids. The lead also acted as a lubricant and chip-breaker, enhancing the machinability and machined surface finish. Many plumbing components have been made from leaded red and semi-red brass casting alloys.

With increased concern about lead in drinking water and the introduction of environmental regulations, efforts were made to develop lead-free copper-based casting alloys. Among the most common are the EnviroBrass alloys, which use *bismuth* and *selenium* as substitutes for lead. Bismuth is not known to be toxic for humans and has been used in a popular remedy for an upset stomach. Selenium is an essential nutrient for humans. While somewhat lower in ductility, the new alloys have been shown to have mechanical properties, machinability and platability that are quite similar to the traditional leaded materials.

■ 7.3 ALUMINUM AND ALUMINUM ALLOYS

GENERAL PROPERTIES AND CHARACTERISTICS

Although *aluminum* has only been a commercial metal for about 120 years, it now ranks second to steel in both worldwide quantity and expenditure, and it is clearly the most important of the nonferrous metals. It has achieved importance in virtually all segments of the economy, with principal uses in transportation, containers and packaging, building construction, electrical applications, consumer durables, and mechanical equipment. We are all familiar with uses such as aluminum cookware, window frames, aluminum siding, and the ever-present aluminum beverage can.

A number of unique and attractive properties account for the engineering significance of aluminum. These include its workability, light weight, corrosion resistance, good electrical and thermal conductivity, optical reflectivity, and a nearly limitless array of available finishes. Aluminum has a specific gravity of 2.7 compared to 7.85 for steel, making aluminum about one-third the weight of steel for an equivalent volume. Cost comparisons are often made on the basis of cost per pound, where aluminum is at a distinct disadvantage, being four to five times more expensive than carbon steel. There are a number of applications, however, where a more appropriate comparison would be based on cost per unit volume. A pound of aluminum produces three times as many same-size parts as a pound of steel, so the cost difference becomes markedly less.

Aluminum can be recycled repeatedly with no loss in quality, and recycling saves 95% of the energy required to produce aluminum from ore. Since the 1980s, the overall reclamation rate for aluminum has been over 50%. The aluminum can is the most recycled beverage container in North America, and over 85% of all aluminum used in cars is recovered at the end of their useful life.

A serious weakness of aluminum from an engineering viewpoint is its relatively low modulus of elasticity, which is also about one-third that of steel. Under identical loadings, an aluminum component will deflect three times as much as a steel component of the same design. Since the modulus of elasticity cannot be significantly altered by alloying or heat treatment, it is usually necessary to provide stiffness and buckling resistance through design features such as ribs or corrugations. These can be incorporated with relative ease, however, because aluminum adapts easily to the full spectrum of fabrication processes.

COMMERCIALLY PURE ALUMINUM

In its pure state, aluminum is soft, ductile, and not very strong. In the annealed condition, pure aluminum has only about one-fifth the strength of hot-rolled structural steel. Commercially pure aluminum, therefore, is used primarily for its physical rather than its mechanical properties.

Electrical-conductor-grade aluminum is used in large quantities and has replaced copper in many applications, such as electrical transmission lines. Commonly designated by the letters *EC*, this grade contains a minimum of 99.45% aluminum and has an electrical conductivity that is 62% that of copper for the same-size wire and 200% that of copper on an equal-weight basis.

ALUMINUMS FOR MECHANICAL APPLICATIONS

For nonelectrical applications, most aluminum is used in the form of alloys. These have much greater strength than pure aluminum yet retain the advantages of light weight, good conductivity, and corrosion resistance. While usually weaker than steel, some alloys are now available that have tensile properties (except for ductility) that are comparable to those of the high-strength low-alloy (HSLA) structural grades. Since alloys can be as much as 30 times stronger than pure aluminum, designers can frequently optimize their design and then tailor the material to their specific requirements. Some alloys are specifically designed for casting, while others are intended for the manufacture of wrought products.

On a strength-to-weight basis, most of the aluminum alloys are superior to steel and other structural metals, but wear, creep, and fatigue properties are generally rather poor. Aluminum alloys have a finite fatigue life at all reasonable values of applied stress. In addition, aluminum alloys rapidly lose their strength and dimensions change by creep when temperature is increased. As a result, most aluminum alloys should not be considered for applications involving service temperatures much above 150°C(300°F). At subzero temperatures, however, aluminum is actually stronger than at room temperature with no loss in ductility. Both the adhesive and the abrasive varieties of wear can be extremely damaging to aluminum alloys.

The selection of steel or aluminum for any given component is often a matter of cost, but considerations of light weight, corrosion resistance, low maintenance expense, and high thermal or electrical conductivity may be sufficient to justify the added cost of aluminum. With the drive for lighter, more fuel-efficient vehicles, the fraction of aluminum targeted for transportation applications rose from 19.4% in 1992 to 31.8% in 2002. The use of aluminum doubled in cars and tripled in sport-utility vehicles (SUVs) and light trucks. Aluminum is being used in body panels, engine blocks, manifolds, transmission housings, and wheels. An aluminum space frame, such as the ones shown in Figure 7-3 for the 2005 Ford GT and the 2006 Corvette Z06, can reduce the overall weight of the structure, enhance recyclability, and reduce the number of parts required for the primary body structure. The all-aluminum space frame of the 2006 Z06 Corvette resulted in a 30% reduction in weight from the all-steel design of the previous model. In 2001, aluminum passed plastics as a percentage of automotive material content and is now second only to steel and iron. The average North American automobile now contains over 125 kg (280 pounds) of aluminum.

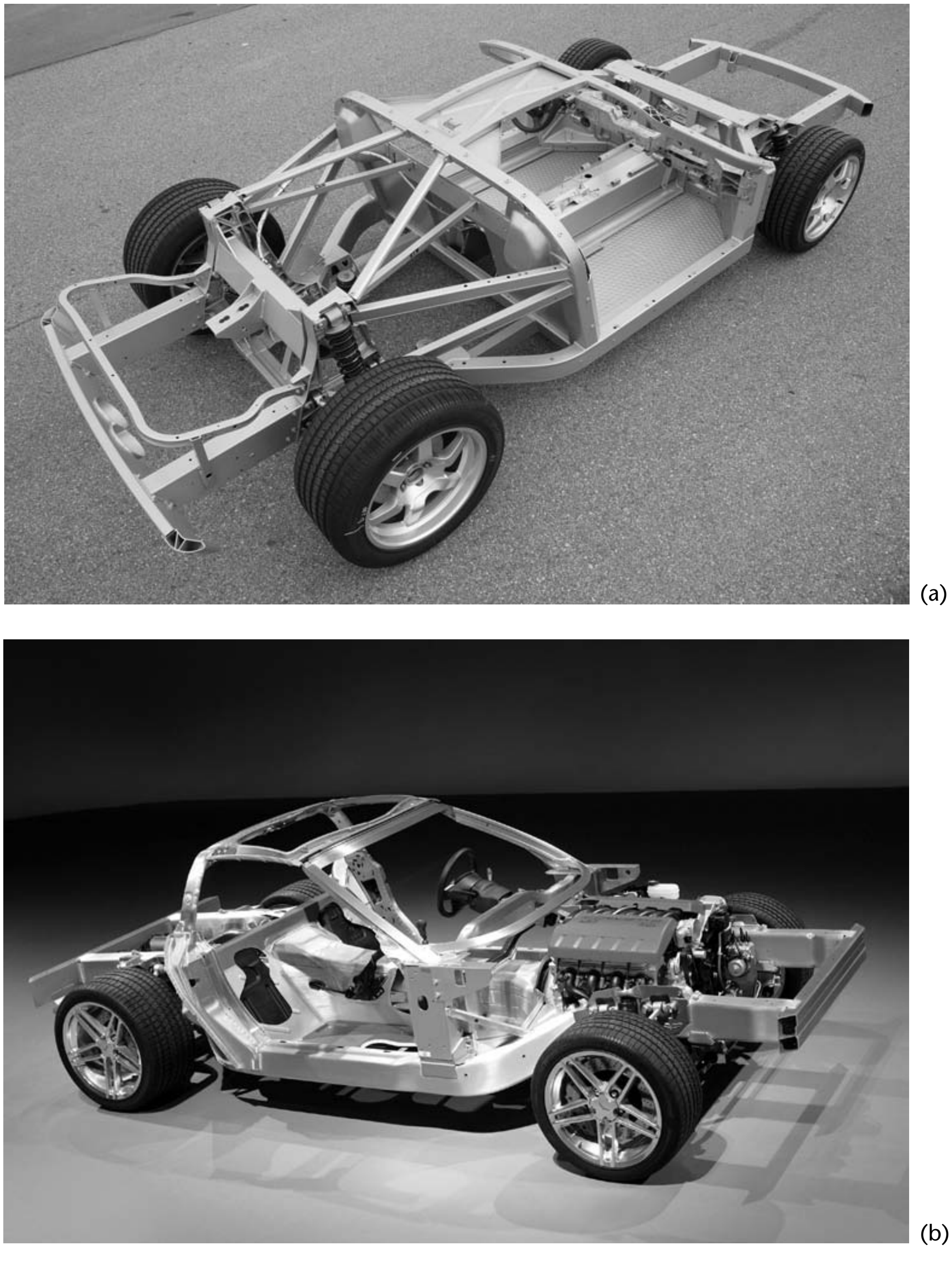

FIGURE 7-3 (a) The space frame chassis for the 2005 Ford GT is comprised of 35 aluminum extrusions, 7 complex castings, 2 semisolid castings, and various aluminum panels, some superplastically formed. (b) The aluminum frame of the 2006 Corvette Z06 yielded a 30% weight savings compared to the previous steel design. *[(a) Courtesy Ford Motor Company, Dearborn, MI; and HydroAluminum of North America, Linthicum, MD). (b) (Courtesy of General Motors, Detroit, MI.)]*

CORROSION RESISTANCE OF ALUMINUM AND ITS ALLOYS

Pure aluminum is very reactive and forms a tight, adherent oxide coating on the surface as soon as it is exposed to air. This oxide is resistant to many corrosive media and serves as a corrosion-resistant barrier to protect the underlying metal. Like stainless steels, the corrosion resistance of aluminum is actually a property of the oxide, not the metal itself. Since the oxide formation is somewhat retarded when alloys are added, aluminum alloys do not have quite the corrosion resistance of pure aluminum.

The oxide coating also causes difficulty when welding. To produce consistent-quality resistance welds, it is usually necessary to remove the tenacious oxide immediately before welding. For fusion welding, special fluxes or protective inert gas atmospheres must be used to prevent material oxidation. While welding aluminum may be more difficult than steel, suitable techniques have been developed to permit the production of high-quality, cost-effective welds with most of the welding processes.

CLASSIFICATION SYSTEM

Aluminum alloys can be divided into two major groups based on the method of fabrication. *Wrought alloys* are those that are shaped as solids and are therefore designed to have attractive forming characteristics, such as low yield strength, high ductility, good fracture resistance, and good strain hardening. *Casting alloys* achieve their shape as they solidify in molds or dies. Attractive features for the casting alloys include low melting point, high fluidity, and attractive as-solidified structures and properties. Clearly, these properties are distinctly different, and the alloys that have been designed to meet them are also different. As a result, separate classification systems exist for the wrought and cast aluminum alloys.

WROUGHT ALUMINUM ALLOYS

The wrought aluminum alloys are generally identified using the standard four-digit designation system for aluminums. The first digit indicates the major alloy element or elements as described below:

Major Alloying Element	
Aluminum, 99.00% and greater	1xxx
Copper	2xxx
Manganese	3xxx
Silicon	4xxx
Magnesium	5xxx
Magnesium and silicon	6xxx
Zinc	7xxx
Other element	8xxx

The second digit is usually zero. Nonzero numbers are used to indicate some form of modification or improvement to the original alloy. The last two digits simply indicate the particular alloy within the family. For example, 2024 simply means alloy number 24 within the 2xxx, or aluminum–copper, system. For the 1xxx series, the last three digits are used to denote the purity of the aluminum.

The four digits of a wrought aluminum designation identify the chemistry of the alloy. Additional information about the alloy condition is then provided through a *temper designation*, in the form of a letter or letter–number suffix using the following system:

-F: as fabricated

-H: strain-hardened

- -H1: strain-hardened by working to desired dimensions; a second digit, 1 through 9, indicates the degree of hardening, 8 being commercially full-hard and 9 extra-hard
- -H2: strain-hardened by cold working, followed by partial annealing
- -H3: strain-hardened and stabilized

-O: annealed

-T: thermally treated (heat treated)

  -T1: cooled from hot working and naturally aged
  -T2: cooled from hot working, cold-worked, and naturally aged
  -T3: solution-heat-treated, cold-worked, and naturally aged
  -T4: solution-heat-treated and naturally aged
  -T5: cooled from hot working and artificially aged
  -T6: solution-heat-treated and artificially aged
  -T7: solution-heat-treated and stabilized
  -T8: solution-heat-treated, cold-worked, and artificially aged
  -T9: solution-heat-treated, artificially aged, and cold-worked
  -T10: cooled from hot working, cold-worked, and artificially aged

-W: solution-heat-treated only

The various wrought alloys are often divided into two basic types: those that achieve strength by solid-solution strengthening and cold working, and those that can be strengthened by heat treatment (age hardening). Table 7-4 lists some of the common wrought aluminum alloys in each family. It can be noted that the work-hardenable alloys (those that cannot be age hardened) are primarily those in the 1xxx (pure aluminum), 3xxx (aluminum– manganese), and 5xxx (aluminum–magnesium) series. A comparison of the annealed (*O* suffix) and cold-worked (*H* suffix) conditions reveals the amount of strengthening achievable through strain hardening.

The precipitation-hardenable alloys are found primarily in the 2xxx, 6xxx, and 7xxx series. By comparing the properties in the heat-treated condition to those of the strain-hardened alloys, we see that heat treatment offers significantly higher strength. Alloy 2017, the original *duralumin*, is probably the oldest age-hardenable aluminum alloy. The 2024 alloy is stronger and has seen considerable use in aircraft applications. An attractive feature of the 2xxx series is the fact that ductility does not significantly decrease during the strengthening heat treatment. Within the 7xxx series are some newer alloys with strengths that approach or exceed those of the high-strength structural steels. Ductility, however, is generally low, and fabrication is more difficult than for the 2xxx-type alloys. Nevertheless, the 7xxx series alloys have also found wide use in aircraft applications. To maintain properties, age-hardened alloys should not be used at temperatures over 175°C (350°F). Welding should be performed with considerable caution since the exposure to elevated temperature will significantly diminish the strengthening achieved through either cold working or age hardening.

Because of their two-phase structure, the heat-treatable alloys tend to have poorer corrosion resistance than either pure aluminum or the single-phase work-hardenable alloys. When both high strength and superior corrosion resistance are desired, wrought aluminum is often produced as *Alclad* material. A thin layer of corrosion-resistant aluminum is bonded to one or both surfaces of a high-strength alloy during rolling, and the material is further processed as a composite.

Because only moderate temperatures are required to lower the strength of aluminum alloys, extrusions and forgings are relatively easy to produce and are manufactured in large quantities. Deep drawing and other sheet-metal-forming operations can also be carried out quite easily. In general, the high ductility and low yield strength of the aluminum alloys make them appropriate for almost all forming operations. Good dimensional tolerances and fairly intricate shapes can be produced with relative ease.

The machinability of aluminum-based alloys, however, can vary greatly, and special tools and techniques may be desirable if large amounts of machining are required. Free-machining alloys, such as 2011, have been developed for screw-machine work. These special alloys can be machined at very high speeds and have replaced brass screw-machine stock in many applications.

TABLE 7-4 Composition and Properties of Some Wrought Aluminum Alloys in Various Conditions

	Composition (%) Aluminum = Balance						Tensile Strength		Yield Strength[b]		Elongation in	Brinell	
Designation[a]	Cu	Si	Mn	Mg	Others	Form Tested	ksi	MPa	ksi	MPa	2 in. (%)	Hardness	Uses and Characteristics
						Work-Hardening Alloys—Not Heat-Treatable							
1100–0	0.12				99 A1	$\frac{1}{16}$-in. sheet	13	90	5	34	35	23	Commercial Al: good forming properties
1100–H14						$\frac{1}{16}$-in. sheet	16	110	14	97	9	32	Good corrosion resistance, low yield strength
110–H18						$\frac{1}{16}$-in. sheet	24	165	21	145	5	44	Cooking utensils; sheet and tubing
3003–0	0.12		1.2			$\frac{1}{16}$-in. sheet	16	110	6	41	30	28	Similar to 1100
3003–H14						$\frac{1}{16}$-in. sheet	22	152	21	145	8	40	Slightly stronger and less ductile
3003–H18						$\frac{1}{16}$-in. sheet	29	200	27	186	4	55	Cooking utensils; sheet-metal work
5052–0				2.5	0.25 Cr	$\frac{1}{16}$-in. sheet	28	193	13	90	25	45	Strongest work-hardening alloy
5052–H32						$\frac{1}{16}$-in. sheet	33	228	28	193	12	60	Highly yield strength and fatigue limit
5052–H36						$\frac{1}{16}$-in. sheet	40	276	35	241	8	73	Highly stressed sheet-metal products
						Precipitation-Hardening Alloys—Heat-Treatable							
2017–0	4.0	0.5	0.7	0.6		$\frac{1}{16}$-in. sheet	26	179	10	69	20	45	Duralumin, original strong alloy
2017–T4						$\frac{1}{16}$-in. sheet	62	428	40	276	20	105	Hardened by quenching and aging
2024–0	4.4		0.6	1.5		$\frac{1}{16}$-in. sheet	27	186	11	76	20	42	Stronger than 2017
2024–T4						$\frac{1}{16}$-in. sheet	64	441	45	290	19	120	Used widely in aircraft construction
2014–0	4.4	0.8	0.8	0.5		$\frac{1}{2}$-in. extruded shapes	27	186	14	97	12	45	Strong alloy for extruded shapes
2014–T6						Forgings	65	448	55	379	10	125	Strong forging alloy
2014–T6						$\frac{1}{16}$-in. sheet	70	483	60	413	8		Higher yield strength than Alclad 2024
Alclad 2014–T6	4.5	1.0	0.8	0.4		$\frac{1}{16}$-in. sheet	63	434	56	386	7		Clad with heat-treatable alloy[c]
7075–0	1.6		0.2	2.5	0.3 Cr	$\frac{1}{16}$-in. sheet	33	228	15	103	17	60	Alloy of highest strength
7075–T6					5.6 Zn	$\frac{1}{16}$-in. sheet	76	524	67	462	11	150	Lower ductility than 2024
Alclad 7075–T6						$\frac{1}{16}$-in. sheet	76	524	67	462	11		Strongest Alclad product
7075–T6						$\frac{1}{2}$-in. extruded shapes	80	552	70	483	6		Strongest alloy for extrusions
6061–T6	0.28	0.6		1.0	0.20 Cr	$\frac{1}{2}$-in. extruded shapes	42	290	40	276	12	95	Strong, corrosion resistant
6063–T6		0.4		0.7		$\frac{1}{2}$-in. rod extruded	35	241	31	214	12	80	Good forming properties and corrosion resistance
6151–T6		0.9		0.6	0.25 Cr	Forgings	48	331	43	297	17	90	For intricate forgings
2025–T6	4.5	0.8	0.8			Forgings	55	379	30	207	18	100	Good forgeability, lower cost
2018–T6	4			0.7	2 Ni	Forgings	55	379	40	276	10	100	Strong at elevated temperatures; forged pistons
4032–T6	0.9	12.2		1.1	0.9 Ni	Forgings	55	379	46	317	9	115	Forged aircraft pistons
2011–T3	5.5			(0.5 Bi)	0.5 Pb	$\frac{1}{2}$-in. rod	55	379	43	297	15	95	Free cutting, screw-machine products

[a] O, annealed; T, quenched and aged; H, cold-rolled to hard temper.

[b] Yield strength taken at 0.2% permanent set.

[c] Cladding alloy; 1.0 Mg. 0.7 Si, 0.5 Mn.

Color anodizing offers an inexpensive and attractive means of surface finishing. A thick aluminum oxide is produced on the surface. Colored dye is then placed on the porous surface and is sealed by immersion into hot water. The result is the colored metallic finish commonly observed on products such as bicycle frames and softball bats.

ALUMINUM CASTING ALLOYS

Although its low melting temperature tends to make it suitable for casting, pure aluminum is seldom cast. Its high shrinkage upon solidification (about 7%) and susceptibility to hot cracking cause considerable difficulty, and scrap is high. By adding small amounts of alloying elements, however, very suitable casting characteristics can be obtained and strength can be increased. Aluminum alloys are cast in considerable quantity by a variety of processes. Many of the most popular alloys contain enough silicon to produce the eutectic reaction, which is characterized by a low melting point and high as-cast strength. Silicon also improves the fluidity of the metal, making it easier to produce complex shapes or thin sections, but high silicon also produces an abrasive, difficult-to-cut material. Copper, zinc, and magnesium are other popular alloy additions that permit the formation of age-hardening precipitates.

Table 7-5 lists some of the commercial aluminum casting alloys and uses the three-digit designation system of the Aluminum Association to designate alloy chemistry. The first digit indicates the alloy group as follows:

Major Alloying Element	
Aluminum, 99.00% and greater	1xx.x
Copper	2xx.x
Silicon with Cu and/or Mg	3xx.x
Silicon	4xx.x
Magnesium	5xx.x
Zinc	7xx.x
Tin	8xx.x
Other elements	9xx.x

The second and third digits identify the particular alloy or aluminum purity, and the last digit, separated by a decimal point, indicates the product form (e.g., casting or ingot). A letter before the numerical designation indicates a modification of the original alloy, such as a small variation in the amount of an alloying element or impurity.

Aluminum casting alloys have been designed for both properties and process. When the strength requirements are low, as-cast properties are usually adequate. High-strength castings usually require the use of alloys that can subsequently be heat treated. Sand casting has the fewest process restrictions. The aluminum alloys used for permanent mold casting are designed to have lower coefficients of thermal expansion (or contraction) because the molds offer restraint to the dimensional changes that occur upon cooling. Die-casting alloys require high degrees of fluidity because they are often cast in thin sections. Most of the die-casting alloys are also designed to produce high "as-cast" strength without heat treatment, using the rapid cooling conditions of the die-casting process to promote a fine grain size and fine eutectic structure. Tensile strengths of the aluminum permanent-mold and die-casting alloys can be in excess of 275 MPa (40 ksi).

ALUMINUM–LITHIUM ALLOYS

Lithium is the lightest of all metallic elements, and in the search for aluminum alloys with higher strength, greater stiffness, and lighter weight, aluminum–lithium alloys have emerged. Each percent of lithium reduces the overall weight by 3% and increases stiffness by 6%. The initially developed alloys offered 8 to 10% lower density, 15 to 20% greater stiffness, strengths comparable to those of existing alloys, and good resistance to fatigue crack propagation. Unfortunately, fracture toughness, ductility, and stress–corrosion resistance were poorer than for conventional alloys. The current-generation

TABLE 7-5 Composition, Properties, and Uses of Some Aluminum Casting Alloys

Alloy Designation[a]	Process[b]	Composition (%) (Major Alloys > 1%)						Temper	Tensile Strength		Elongation in 2 in. (%)	Uses and Chracteristics
		Cu	Si	Mg	Zn	Fe	Other		ksi[c]	MPa		
208	S	4.0	3.0		1.0	1.2		F	19	1.31	1.5	General-purposes and castings, can be heat treated
242	S, P	4.0		1.6		1.0	2.0 Ni	T61	40	276	–	Withstands elevated temperatures
295	S	4.5	1.0			1.0		T6	32	221	3.0	Structural castings, heat-treatable
296	P	4.5	2.5			1.2		T6	35	241	2.0	Permanent-mold version of 295
308	P	4.5	5.5		1.0	1.0		F	24	166	–	General-purpose permanent mold
319	S, P	3.5	6.0		1.0	1.0		T6	31	214	1.5	Superior casting characteristics
354	P	1.8	9.0					–	–	–	–	High-strength, aircraft
355	S, P	1.3	5.0					T6	32	221	2.0	High strength and pressure tightness
C355	S, P	1.3	5.0					T61	40	276	3.0	Stronger and more ductile than 355
356	S, P		7.0					T6	30	207	3.0	Excellent castability and impact strength
A356	S, P		7.0					T61	37	255	5.0	Stronger and more ductile than 356
357	S, P		7.0					T6	45	310	3.0	High strength-to-weight castings
359	S, P		9.0					–	–	–	–	High-strength aircraft usage
360	D		9.5			2.0		F	44[d]	303	2.5[d]	Good corrosion resistance and strength
A360	D		9.5			2.0		F	46[d]	317	3.5[d]	Similar to 360
380	D	3.5	8.5		3.0	2.0		F	46[d]	317	2.5[d]	High strength and hardness
A380	D	3.5	8.5		3.0	1.3		F	47[d]	324	3.5[d]	Similar to 380
383	D	1.5	10.5		3.0	1.3		F	45[d]	310	3.5[d]	High strength and hardness
384	D	3.75	11.3		1.0	1.3		F	48[d]	331	2.5	High strength and hardness
413	D	1.0	12.0			2.0		F	43[d]	297	2.5[d]	General-purpose, good castability
A413	D	1.0	12.0			1.3		F	42[d]	290	3.5[d]	Similar to 413
443	D	5.25				2.0		F	33[d]	228	9.0[d]	General-purpose, good castability
B443	S, P	5.25				2.0		F	17	117	3.0	General-purpose casting alloy
514	S			4.0				F	22	152	6.0	High corrosion resistance
518	D			8.0		1.8		F	45[d]	310	5.0[d]	Good corrosion resistance, strength, and toughness
520	S			10.0				T4	42	290	12.0	High strength with good ductility
535	S			6.9				F	35	241	9.0	Good corrosion resistance and machinability
712	S				5.8			F	34	234	4.0	Good properties without heat treatment
713	S, P				7.5	1.1		F	32	221	3.0	Similar to 712
771	S				7.0			T6	42	290	5.0	Aircraft and computer components
850	S, P	1.0					6.3 Sn, 1.0 Ni	T5	16	110	5.0	Bearing alloy

---

[a] Aluminum Association.

[b] Sand-cast; P, permanent-mold-cast; D, die cast.

[c] Minimum figures unless noted.

[d] Typical values.

alloys are aluminum–copper–lithium, with about 4% copper and no more than 2% lithium. The weight benefits are still sufficient to warrant use in a number of aerospace applications, and the fact that they can be fabricated by conventional processes make them attractive alternatives to the advanced composites.

Since aluminum alloys can comprise as much as 80% of the weight of commercial aircraft, even small percentage reductions can be significant. Improved strength and stiffness can further facilitate weight reduction. Fuel savings over the life of the airplane would more than compensate for any additional manufacturing expense. As an example of potential, the weight of the external liquid-hydrogen tank on the U.S. space shuttle booster rocket was reduced by approximately 3400 kg (7500 lb) by conversion to an aluminum–lithium alloy.

ALUMINUM FOAM

A material known as "stabilized aluminum foam" can be made by mixing ceramic particles with molten aluminum and blowing gas into the mixture. The bubbles remain through solidification, yielding a structure that resembles metallic Styrofoam. Originally developed around 2000 for automotive, aerospace, and military applications, the material has found additional uses in architecture and design. Strength-to-weight is outstanding, and the material offers excellent energy absorption. The fuel cells of race cars have been shrouded with aluminum foam, and foam fill has been inserted between the front of cars and the driver compartment. Tubular structures can be filled with foam to increase strength, absorb energy, and provide resistance to crushing. Still other applications capitalize on the excellent thermal insulation, vibration damping, and sound absorption that results from the numerous trapped air pockets.

7.4 MAGNESIUM AND MAGNESIUM ALLOYS

GENERAL PROPERTIES AND CHARACTERISTICS

Magnesium is the lightest of the commercially important metals, having a specific gravity of about 1.74 (two-thirds that of aluminum, one-fourth that of steel, and only slightly higher than fiber-reinforced plastics). Like aluminum, magnesium is relatively weak in the pure state and for engineering purposes is almost always used as an alloy. Even in alloy form, however, the metal is characterized by poor wear, creep, and fatigue properties. It has the highest thermal expansion of all engineering metals. Strength drops rapidly when the temperature exceeds 100°C (200°F), so magnesium should not be considered for elevated-temperature service. Its modulus of elasticity is even less than that of aluminum, being between one-fourth and one-fifth that of steel. Thick sections are required to provide adequate stiffness, but the alloy is so light that it is often possible to use thicker sections for the required rigidity and still have a lighter structure than can be obtained with any other metal. Cost per unit volume is low, so the use of thick sections is generally not prohibitive. Moreover, since a large portion of magnesium components are cast, the thicker sections actually become a desirable feature. Ductility is frequently low, a characteristic of the hexagonal-close-packed (HCP) crystal structure, but some alloys have values exceeding 10%.

On the more positive side, magnesium alloys have a relatively high strength-to-weight ratio, with some commercial alloys attaining strengths as high as 380 MPa (55 ksi). High energy absorption means good damping of noise and vibration, as well as impact and dent resistance. While many magnesium alloys require enamel or lacquer finishes to impart adequate corrosion resistance, this property has been improved markedly with the development of higher-purity alloys. In the absence of unfavorable galvanic couples, these materials have excellent corrosion resistance and are finding applications in a wide range of markets, including automotive, aerospace, power tools, sporting goods, and electronic products (where they offer a combination of electromagnetic shielding, light weight, and durability exceeding that of plastics and alternative metals). While aluminum alloys are often used for the load-bearing members of mechanical structures, magnesium alloys are best suited for those applications where lightness is the primary consideration and strength is a secondary requirement.

MAGNESIUM ALLOYS AND THEIR FABRICATION

A designation system for magnesium alloys has been developed by the ASTM, identifying both chemical composition and temper, and is presented in specification B93. Two prefix letters designate the two largest alloying metals in order of decreasing amount, using the following format:

A	aluminum	F	iron	M	manganese	R	chromium
B	bismuth	H	thorium	N	nickel	S	silicon
C	copper	K	zirconium	P	lead	T	tin
D	cadmium	L	beryllium	Q	silver	Z	zinc
E	rare earth						

Aluminum is the most common alloying element and, along with zinc, zirconium, and thorium, promotes precipitation hardening. Manganese improves corrosion resistance, and tin improves castability. The two letters are then followed by two or three numbers and a possible suffix letter. The numbers correspond to the rounded-off whole-number percentages of the two main alloy elements and are arranged in the same order as the letters. Thus the AZ91 alloy would contain approximately 9% aluminum and 1% zinc. A suffix letter is used to denote variations of the same base alloy, such as AZ91A. The temper-designation suffix is quite similar to that used with the aluminum alloys. Table 7-6 lists some of the more common magnesium alloys together with their properties and uses.

Sand, permanent-mold, die, semisolid, and investment casting are all well developed for magnesium alloys and take advantage of the low melting points and high fluidity. Die casting is clearly the most popular manufacturing process for magnesium, accounting for 70% of all castings. Although the magnesium alloys typically cost about twice as much as aluminum, the hot-chamber die-casting process used with magnesium is easier, more economical, and 40 to 50% faster than the cold-chamber process generally required for aluminum. Wall thickness, draft angle, and dimensional tolerances are all lower than for both aluminum die castings and thermoplastic moldings. Die life is significantly greater than that observed with aluminum. As a result, magnesium die castings compete well with aluminum[2] and often replace plastic injection-molded components when improved stiffness or dimensional stability, or the benefits of electrical or thermal conductivity, are required.

Forming behavior is poor at room temperature, but most conventional processes can be performed when the material is heated to temperatures between 250° and 500°C (480° and 775°F). Since these temperatures are easily attained and generally do not require a protective atmosphere, many formed and drawn magnesium products are manufactured. Magnesium extrusions and sheet metal products have properties similar to the more common wrought aluminum alloys. While slightly heavier than plastics, they offer an order of magnitude or greater improvement in stiffness or rigidity.

The machinability of magnesium alloys is the best of any commercial metal and, in many applications, the savings in machining costs, achieved through deeper cuts, higher cutting speeds, and longer tool life, more than compensate for the increased cost of the material. It is necessary, however, to keep the tools sharp and provide adequate cooling for the chips.

Magnesium alloys can be spot welded almost as easily as aluminum, but scratch brushing or chemical cleaning is necessary before forming the weld. Fusion welding is best performed with processes using an inert shielding atmosphere of argon or helium gas.

While heat treatments can be used to increase strength, the added increment achieved by age hardening is far less than observed with aluminum. In fact, the strongest magnesium alloy is only about three times stronger than the weakest. Because of this, designs must be made to accommodate the material, rather than the material being tailored to the design.

Considerable misinformation exists regarding the fire hazards when processing or using magnesium alloys. It is true that magnesium alloys are highly combustible

---

[2] The most common magnesium die-casting alloy, AZ91, has the same yield strength and ductility as the most common die-cast aluminum, alloy 380.

TABLE 7-6 Composition, Properties, and Characteristics of Common Magnesium Alloys

		Composition (%)						Tensile Strength[a]		Yield Strength[a]			
Alloy	Temper	Al	Rare Earths	Mn	Th	Zn	Zr	ksi	MPa	ksi	MPa	Elongation in 2 in. (%)	Uses and Characteristics
AM60A	F	6.0		0.13				30	207	17	117	6	Die castings
AM100A	T4	10.0		0.1				34	234	10	69	6	Sand and permanent-mold castings
AZ31B	F	3.0				1.0		32	221	15	103	6	Sheet, plate, extrusions, forgings
AZ61A	F	6.5				1.0		36	248	16	110	7	Sheet, plate, extrusions forgings
AZ63A	T5	6.0				3.0		34	234	11	76	7	Sand and permanent-mold castings
AZ80A	T5	8.5				0.5		34	234	22	152	2	High-strength forgings, extrusions
AZ81A	T4	7.6				0.7		34	234	11	76	7	Sand and permanent-mold castings
AZ91A	F	9.0				0.7		34	234	23	159	3	Die castings
AZ92A	T4	9.0				2.0		34	234	11	76	6	High-strength sand and permanent-mold castings
EZ33A	T5		3.2			2.6	0.7	20	138	14	97	2	Sand and permanent-mold castings
HK31A	H24				3.2		0.7	33	228	24	166	4	Sheet and plates; castings in T6 temper
HM21A	T5			0.8	2.0			33	228	25	172	3	High-temperature (800°F) sheets, plates, forgings
HZ32A	T5				3.2	2.1		27	186	13	90	4	Sand and permanent-mold castings
ZH62A	T5				1.8	5.7	0.7	35	241	22	152	5	Sand and permanent-mold castings
ZK51A	T5					4.6	0.7	34	234	20	138	5	Sand and permanent-mold castings
ZK60A	T5					5.5	0.45	38	262	20	138	7	Extrusions, forgings

[a] Properties are minimums for the designated temper.

when in a finely divided form, such as powder or fine chips, and this hazard should never be ignored. In the form of sheet, bar, extruded product, or finished castings, however, magnesium alloys rarely present a fire hazard. When the metal is heated above 700°C (950°F), a noncombustible, oxygen-free atmosphere is recommended to suppress burning, which will initiate around 600°C (1100°F). Casting operations often require additional precautions due to the reactivity of magnesium with sand and water.

7.5 ZINC-BASED ALLOYS

Over 50% of all metallic *zinc* is used in the *galvanizing* of iron and steel. In this process the iron-based material is coated with a layer of zinc by one of a variety of processes that include direct immersion in a bath of molten metal (hot dipping) and electrolytic plating. The resultant coating provides excellent corrosion resistance, even when the surface is badly scratched or marred. Moreover, the corrosion resistance will persist until all of the sacrificial zinc has been depleted.

Zinc is also used as the base metal for a variety of die-casting alloys. For this purpose, zinc offers low cost, a low melting point (only 380°C or 715°F), and the attractive

TABLE 7-7 Composition and Properties of Some Zinc Die-Casting Alloys

	#3	#5	#7	ZA-8			ZA-12			ZA-27		
	SAE 903	SAE 925										
Alloy	ASTM AG40A	ASTM AC41A	ASTM AG408	S[a]	P	D	S	P	D	S	P	D
Composition[b]												
Aluminum	3.5–4.3	3.5–4.3	3.5–4.3	8.0–8.8			10.5–11.5			25.0–28.0		
Copper	0.25 max	0.75–1.25	0.25 max	0.8–1.3			0.5–1.2			2.0–2.5		
Zinc	balance	balance	balance	balance			balance			balance		
Properties												
Density (g/cc)	6.6	6.6	6.6	6.3			6.0			5.0		
Yield strength (MPa)	221	228	221	200	206	290	214	269	317	372		379
(ksi)	32	33	32	29	30	42	31	39	46	54		55
Tensile strength (MPa)	283	328	283	263	255	374	317	345	400	441		421
(ksi)	41	48	41	38	37	54	46	50	58	64		61
Elongation (% in 2 in.)	10	7	13	2	2	10	3	3	7	6		3
Impact strength (J)	58	65	58	20		42	25		29	47		5
Modulus of elasticity (GPa)	85.5	85.5	85.5	85.5			82.7			77.9		
Machinability[c]	E	E	E	E			VG			G		

[a] S, sand-cast; P, permanent-mold cast; D, die-cast.

[b] Also contains small amounts of Fe, Pb, Cd, Sn, and Ni.

[c] E, excellent; VG, very good; G, good.

property of not adversely affecting steel dies when in contact with molten metal. Unfortunately, pure zinc is almost as heavy as steel and is also rather weak and brittle. Therefore, when alloys are designed for die casting, the alloy elements are usually selected for their ability to increase strength and toughness in the as-cast condition while retaining the low melting point.

The composition and properties of common zinc die-casting alloys are presented in Table 7-7. Alloy AG40A (also known as alloy 903 or Zamak 3) is widely used because of its excellent dimensional stability, and alloy AC41A (also known as alloy 925 or Zamak 5) offers higher strength and better corrosion resistance. As a whole, the zinc die-casting alloys offer a reasonably high strength and impact resistance, along with the ability to be cast to close dimensional limits with extremely thin sections. The dimensions are quite stable, and the products can be finish machined at a minimum of cost. Resistance to surface corrosion is adequate for a number of applications, and the material can be surface finished by a variety of means that include polishing, plating, painting, anodizing, or a chromate conversion coating. Energy costs are low (low melting temperature), tool life is excellent, and the zinc alloys can be efficiently recycled. While the rigidity is low compared to that of other metals, it is far superior to engineering plastics, and zinc die castings often compete with plastic injection moldings.

The attractiveness of zinc die casting has been further enhanced by the zinc–aluminum casting alloys (ZA-8, ZA-12, and ZA-27, with 8, 12, and 27% aluminum, respectively). Initially developed for sand, permanent-mold, and graphite-mold casting, these alloys can also be die cast to achieve higher strength (up to 60 ksi or 415 MPa), hardness (up to 120 BHN), creep resistance and wear resistance, and lighter weight than is possible with any of the conventional alloys. Because of their lower melting and casting costs, these materials are becoming attractive alternatives to the conventional aluminum, brass, and bronze casting alloys, as well as cast iron.

7.6 TITANIUM AND TITANIUM ALLOYS

Titanium is a strong, lightweight, corrosion-resistant metal that has been of commercial importance since about 1950. Because its properties are generally between those of steel and aluminum, its importance has been increasing rapidly. The yield strength of commercially pure titanium is about 210 MPa (30 ksi), but this can be raised to 1300 MPa (190 ksi) or higher through alloying and heat treatment, a strength comparable to that of many heat-treated alloy steels. Density, on the other hand, is only 56% that of steel (making strength-to-weight quite attractive), and the modulus of elasticity ratio is also about one-half. Good mechanical properties are retained up to temperatures of 535°C (1000°F), so the metal is often considered to be a high-temperature engineering material. On the negative side, titanium and its alloys suffer from high cost, fabrication difficulties, a high energy content (they require about 10 times as much energy to produce as steel), and a high reactivity at elevated temperatures (above 535°C).

Titanium alloys are designated by major alloy and amount (see ASTM specification B-265), and are generally grouped into three classes based on their microstructural features. These classes are known as alpha-, beta-, and alpha-beta-titanium alloys, the terms denoting the stable phase or phases at room temperature. Alloying elements can be used to stabilize the hexagonal-close-packed alpha phase or the body-centered-cubic beta phase, and heat treatments can be applied to manipulate structure and improve properties. Fabrication can be by casting (generally investment or graphite mold), forging, rolling, extrusion, or welding, provided that special process modifications and controls are implemented. Advanced processing methods include powder metallurgy, mechanical alloying, rapid-solidification processing (RSP), superplastic forming, diffusion bonding, and hot-isostatic pressing (HIP).

While titanium is an abundant metal, it is difficult to extract from ore, difficult to process, and difficult to fabricate. These difficulties make it significantly more expensive than either steel or aluminum, so its uses relate primarily to its light weight, high strength-to-weight ratio, good stiffness, good fatigue strength and fracture toughness, excellent corrosion resistance (the result of a thin, tenacious oxide coating), and the retention of mechanical properties at elevated temperatures. Aluminum, magnesium, and beryllium are the only base metals that are lighter than titanium, and none of these come close in either mechanical performance or elevated-temperature properties. Aerospace applications tend to dominate, with titanium comprising up to 40% of the structural weight of high-performance military fighters. Titanium and titanium alloys are also used in such diverse areas as chemical- and electrochemical-processing equipment, food-processing equipment, heat exchangers, marine implements, medical implants, high-performance bicycle and automotive components, and sporting goods. They are often used in place of steel where weight savings are desired and to replace aluminums where high-temperature performance is necessary. Some bonding applications utilize the unique property that titanium wets glass and some ceramics. The titanium–6% aluminum–4% vanadium alloy is the most popular titanium alloy, accounting for nearly 50% of all titanium usage worldwide. Figure 7-4 shows the elevated temperature strength retention of several titanium alloys.

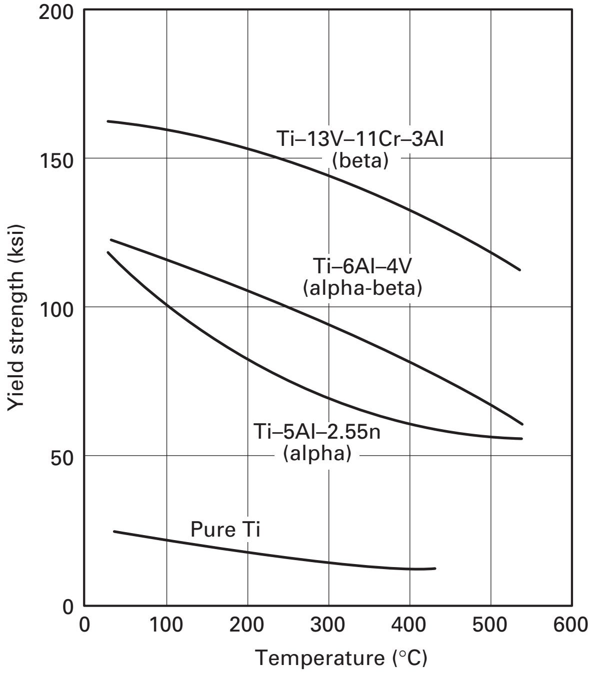

FIGURE 7-4 Strength retention at elevated temperature for various titanium alloys.

7.7 NICKEL-BASED ALLOYS

Nickel-based alloys are most noted for their outstanding strength and corrosion resistance, particularly at high temperatures, and are available in a wide range of wrought and cast grades. Wrought alloys are generally known by tradenames, such as Monel, Hastelloy, Inconel, Incoloy, and others. Cast alloys are generally identified by Alloy Casting Institute or ASTM designations. General characteristics include good formability (face-centered-cubic crystal structure), good creep resistance, and the retention of strength and ductility at cold or even cryogenic temperatures.

Monel metal, an alloy containing about 67% nickel and 30% copper, has been used for years in the chemical- and food-processing industries because of its outstanding corrosion characteristics. In fact, Monel probably has better corrosion resistance to more media than any other commercial alloy. It is particularly resistant to salt water, sulfuric acid, and even high-velocity, high-temperature steam. For the latter reason, Monel has been used for steam turbine blades. It can be polished to have an excellent appearance, similar to that of stainless steel, and is often used in ornamental trim and household ware. In its most common form, Monel has a tensile strength ranging from 500 to 1200 MPa (70 to 170 ksi), with a companion elongation ranging between 2 and 50%.

Nickel-based alloys have also been used for electrical resistors and heating elements. These materials are primarily nickel–chromium alloys and are known by the trade name *Nichrome*. They have excellent resistance to oxidation while retaining useful strength at red heats. *Invar*, an alloy of nickel and 36% iron, has a near-zero thermal expansion and is used where dimensions cannot change with a change in temperature.

Other nickel-based alloys have been designed to provide good mechanical properties at extremely high temperatures and are generally classified as *superalloys*. These alloys will be discussed along with other, similar materials in the following section.

7.8 SUPERALLOYS AND OTHER METALS DESIGNED FOR HIGH-TEMPERATURE SERVICE

Titanium and titanium alloys have already been cited as being useful in providing strength at elevated temperatures, but the maximum temperature for these materials is approximately 535°C (1000°C). Jet engine, gas-turbine, rocket, and nuclear applications often require materials that possess high strength, creep resistance, oxidation and corrosion resistance, and fatigue resistance at temperatures up to and in excess of 1100°C (2000°C). Other application areas include heat exchangers, chemical reaction vessels, and furnace components.

One class of materials offering these properties is the *superalloys*, first developed in the 1940s for use in the elevated-temperature areas of turbojet aircraft. These alloys are based on *nickel*, *iron and nickel*, or *cobalt* and have the ability to retain most of their strength even after long exposures to extremely high temperatures. Strength comes from solid-solution strengthening, precipitation hardening, and dispersed alloy carbides or oxides. The nickel-based alloys tend to have higher strengths at room temperature, with yield strengths up to 1200 MPa (175 ksi) and ultimate tensile strengths as high as 1450 MPa (210 ksi). The 1000-hour rupture strengths of the nickel-based alloys at 815°C (1500°F) are also higher than those of the cobalt-based material. Unfortunately, the density of all superalloy metals is significantly greater than that of iron, so their use is often at the expense of additional weight.

Most of the superalloys are difficult to form or machine, so methods such as electrodischarge, electrochemical, or ultrasonic machining are often used, or the products are made to final shape as investment castings. Powder metallurgy techniques are also used extensively. Because of their ingredients, all of the alloys are quite expensive, and this limits their use to small or critical parts where the cost is not the determining factor.

A number of engineering applications require materials whose temperature limits exceed those of the superalloys. Figure 7-5 shows the high-temperature exhaust of a jet engine. One reference estimates that the exhaust of future jet engines will reach temperatures in excess of 1425°C (2600°F). Rocket nozzles go well beyond this point. Materials such as TD-nickel (a powder metallurgy nickel alloy containing 2% dispersed thorium oxide) can operate

FIGURE 7-5 Superalloys and refractory metals are needed to withstand the high temperatures of jet engine exhaust. *(Courtesy of Northrop Grumman Corporation, Los Angeles, CA.)*

at service temperatures somewhat above 1100°C (2000°F). Going to higher temperatures, we look to the *refractory metals,* which include *niobium*, *molybdenum*, *tantalum*, *rhenium*, and *tungsten.* All have melting points near or in excess of 2500°C (4500°F). They retain a significant fraction of their strength at elevated temperature and can be used at temperatures as high as 1650°C (3000°F) provided that protective ceramic coatings effectively isolate them from gases in their operating environment. Coating technology is quite challenging, however, since the ceramic coatings must (1) have a high melting point, (2) not react with the metal they are protecting, (3) provide a diffusion barrier to oxygen and other gases, and (4) have thermal-expansion characteristics that match the underlying metal. While the refractory metals could be used at higher temperatures, the uppermost temperature is currently being set by limitations and restrictions imposed by the coating.

Table 7-8 presents key properties for several refractory metals. Unfortunately, all are heavier than steel, and several are significantly heavier. In fact, tungsten, with a density about 1.7 times that of lead, is often used in counterbalances, compact flywheels, and weights, with applications as diverse as military projectiles, gyratory compasses, and golf clubs.

Other materials and technologies that offer promise for high-temperature service include intermetallic compounds, engineered ceramics, and advanced coating systems. The *intermetallic compounds* provide properties that are between those of metals and ceramics, and they are excellent candidates for high-temperature applications. They are hard, stiff, creep resistant, and oxidation resistant, with good high-temperature strength that often increases with temperature. The titanium and nickel aluminides offer the additional benefit of being significantly lighter than the superalloys. Unfortunately, the intermetallics are also characterized by poor ductility, poor fracture toughness, and poor fatigue resistance. They are difficult to fabricate using traditional techniques, such as forming and welding. On a positive note, research and development efforts have begun to overcome some of these limitations, and the intermetallics are now appearing in commercial products.

Figure 7-6 compares the upper limit for useful mechanical properties for a variety of engineering metals.

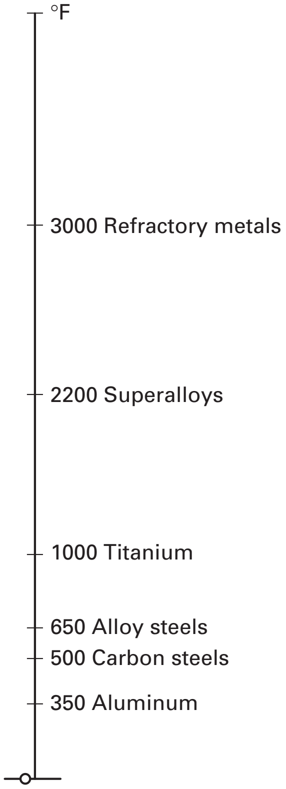

FIGURE 7-6 Temperature scale indicating the upper limit to useful mechanical properties for various engineering metals.

■ 7.9 LEAD AND TIN, AND THEIR ALLOYS

The dominant properties of *lead* and lead alloys are high density coupled with strength and stiffness values that are among the lowest of the engineering metals. The principal uses of lead as a pure metal include storage batteries, cable cladding, and radiation-

TABLE 7-8 Properties of Some Refractory Meals

		Room Temperature				Elevated Temperature [1832°F (1000°C)]	
Metal	Melting Temperature [°F(°C)]	Density (g/cm^3)	Yield Strength (ksi)	Tensile Strength (ksi)	Elongation (%)	Yield Strength (ksi)	Tensile Strength (ksi)
Molybdenum	4730 (2610)	10.22	80	120	10	30	50
Niobium	4480 (2470)	8.57	20	45	25	8	17
Tantalum	5430 (3000)	16.6	35	50	35	24	27
Tungsten	6170 (3410)	19.25	220	300	3	15	66

absorbing or sound- and vibration-damping shields. Lead-acid batteries are clearly the dominant product, and over 60% of U.S. lead consumption is generated from battery recycling. Other applications utilize the properties of good corrosion resistance, low melting point, and the ease of casting or forming. As a pure metal, *tin* is used primarily as a corrosion-resistant coating on steel.

In the form of alloys, lead and tin are almost always used together. Bearing material and *solder* are the two most important uses. One of the oldest and best bearing materials is an alloy of 84% tin, 8% copper, and 8% antimony, known as genuine or tin *babbitt*. Because of the high cost of tin, however, lead babbitt, composed of 85% lead, 5% tin, 10% antimony, and 0.5% copper, is a more widely used bearing material. The tin and antimony combine to form hard particles within the softer lead matrix. The shaft rides on the harder particles with low friction, while the softer matrix acts as a cushion that can distort sufficiently to compensate for misalignment and assure a proper fit between the two surfaces. For slow speeds and moderate loads, the lead-based babbitts have proven to be quite adequate.

Soft solders are basically lead–tin alloys with a chemical composition near the eutectic value of 61.9% tin (see Figure 4-5). While the eutectic alloy has the lowest melting temperature, the high cost of tin has forced many users to specify solders with a lower-than-optimum tin content. A variety of compositions are available, each with its own characteristic melting range. Environmental concerns and recent legislation have prompted a move toward lead-free solders for applications involving water supply and distribution. Additional information on solders and soldering is provided in Chapter 34.

■ 7.10 SOME LESSER KNOWN METALS AND ALLOYS

Several of the lesser known metals have achieved importance as a result of their somewhat unique physical and mechanical properties. *Beryllium* combines a density less than aluminum with a stiffness greater than steel and is transparent to X-rays. *Hafnium*, *thorium*, and *beryllium* are used in nuclear reactors because of their low neutron-absorption characteristics. Depleted *uranium*, because of its very high density (19.1 g/cm^3), is useful in special applications where maximum weight must be put into a limited space, such as counterweights or flywheels. *Cobalt*, in addition to its use as a base metal for superalloys, is used as a binder in various powder-based components and sintered carbides, where it provides good high-temperature strength. *Zirconium* is used for its outstanding corrosion resistance to most acids, chlorides, and organic acids. It offers high strength, good weldability and fatigue resistance, and attractive neutron-absorption characteristics. *Rare earth metals* have been incorporated into magnets that offer increased strength compared to the standard ferrite variety. Neodymium–iron–boron and samarium–cobalt are two common varieties.

While the precious metals (*gold*, *silver*, and the platinum group metals—*platinum, palladium, rhodium, ruthenium, iridium*, and *osmium*) may seem unlikely as engineering materials, they offer outstanding corrosion resistance and electrical conductivity, often under extreme conditions of temperature and environment.

■ 7.11 METALLIC GLASSES

Metallic glasses, or amorphous metals, have existed in the form of thin ribbons and fine powders since the 1960s. By cooling liquid metal at a rate that exceeds 10^5 to 10^6 C/second, a rigid solid is produced that lacks crystalline structure. Since the structure also lacks the crystalline "defects" of grain boundaries and dislocations, the materials exhibit extraordinary mechanical properties (high strength, large elastic strain, good toughness, and wear resistance), unusual magnetic behavior, and high corrosion resistance.

Recent developments have enabled the production of amorphous metal with cooling rates of only 1 to 100 °C/second. Known as *bulk metallic glass (BMG)*, complex-shaped parts of this material with thicknesses up to several centimeters can now be produced by conventional casting methods, such as die casting. Because the material goes from liquid to glass, not liquid to crystalline solid, precision products can be made with a total shrinkage that is often less than 0.5%. Pellets or powders of bulk metallic glass can also be produced, and since many of the alloys have low melting temperatures, products can be made by reheating to a soft condition and forming by processes that are conventionally used to shape thermoplastic polymers (compression molding, extrusion, blow molding, and injection molding). Applications have just begun to emerge in areas as diverse as load-bearing structures, electronic casings, replacement joints, and sporting goods. In addition, metallic glasses have also been developed that retain their glassy structure at temperatures as high as 870°C (1600°F).

7.12 GRAPHITE

While technically not a metal, *graphite* is an engineering material with considerable potential. It offers properties of both a metal and nonmetal, including good thermal and electrical conductivity, inertness, the ability to withstand high temperature, and lubricity. In addition, it possesses the unique property of increasing in strength as the temperature is elevated. Polycrystralline graphites can have mechanical strengths up to 70 MPa (10 ksi) at room temperature, which double when the temperature reaches 2500°C (4500°F).

Large quantities of graphite are used as electrodes in arc furnaces, but other uses are developing rapidly. The addition of small amounts of borides, carbides, nitrides, and silicides greatly lowers the oxidation rate at elevated temperatures and improves the mechanical strength. This makes the material highly suitable for use as rocket-nozzle inserts and as permanent molds for casting various metals, where it costs less than tool steel, requires no heat treating, and has a lower coefficient of thermal expansion. It can be machined quite readily to excellent surface finishes. Graphite fibers have also found extensive use in composite materials. This application will be discussed in Chapter 8.

Key Words

Alclad
aluminum
amorphous metal
babbitt
beryllium
bismuth
brass
bronze
cast
cobalt
copper
dezincification
galvanizing
graphite
intermetallic compound
lead
magnesium
metallic glass
molybdenum
Monel
nickel
niobium
nonferrous
refractory metals
rhenium
selenium
solder
stress–corrosion cracking
superalloys
tantalum
temper designation
tin
titanium
tungsten
wrought
zinc

Review Questions

1. What types of properties do nonferrous metals possess that may not be available in the ferrous metals?
2. In what respects are the nonferrous metals generally inferior to steel?
3. For what type of fabrication processes might the low-melting-point alloys be attractive?
4. What are the three properties of copper and copper alloys that account for many of their uses and applications?
5. What properties make copper attractive for cold-working processes?
6. What are some of the limiting properties of copper that might restrict its area of application?
7. Why does the copper designation system separate wrought and cast alloys? What properties are attractive for each group?
8. What are some of the attractive engineering properties that account for the wide use of the copper–zinc alpha brasses?
9. Why might cold-worked brass require a stress relief prior to being placed in service?
10. Why might the term *bronze* be potentially confusing when used in reference to a copper-based alloy?
11. What are some attractive engineering properties of copper–nickel alloys?
12. Describe the somewhat unique property combination that exists in heat-treated copper–beryllium alloys. What has limited its use in recent years?
13. What alloys have been used to replace lead in copper casting alloys being targeted to drinking water applications?
14. What are some of the attractive engineering properties of aluminum and aluminum alloys?
15. How does aluminum compare to steel in terms of weight? Discuss the merits of comparing cost per unit weight versus cost per unit volume.
16. What is the primary benefit of aluminum recycling compared to making new aluminum from ore?
17. How does aluminum compare to copper in terms of electrical conductivity?
18. What features might limit the mechanical uses and applications of aluminum and aluminum alloys?
19. What features make aluminum attractive for transportation applications?

20. How is the corrosion-resistance mechanism observed in aluminum and aluminum alloys similar to that observed in stainless steels?
21. How are the wrought alloys distinguished from the cast alloys in the aluminum designation system? Why would these two groups of metals have distinctly different properties?
22. What feature in the wrought aluminum designation scheme is used to denote the condition or structure of a given alloy?
23. What is the primary strengthening mechanism in the high-strength “aircraft-quality” aluminum alloys?
24. What unique combination of properties is offered by the composite Alclad materials?
25. What surface finishing technique is used in the production of numerous metallic colored aluminum products.
26. What specific material properties might make an aluminum casting alloy attractive for permanent mold casting? For die casting?
27. What features have limited the success and expansion of the aluminum–lithium alloys?
28. What are some possible applications of aluminum foam?
29. What are some attractive and restrictive properties of magnesium and magnesium alloys?
30. Describe the designation system applied to magnesium alloys.
31. In what way can ductility be imparted to magnesium alloys so that they can be formed by conventional processes?
32. Under what conditions should magnesium be considered to be a flammable or explosive material?
33. What is the primary application of pure zinc? Of the zinc-based engineering alloys?
34. What are some of the attractive features of the zinc–aluminum casting alloys?
35. What are some of the attractive engineering properties of titanium and titanium alloys?
36. What feature is used to provide the metallurgical classification of titanium alloys?
37. What temperature is generally considered to be the upper limit for which titanium alloys retain their useful engineering properties?
38. What conditions favor the selection and use of nickel-based alloys?
39. What property of Monel alloys dominates most of the applications?
40. What metals or combinations of metals form the bases of the superalloys?
41. What class of metals or alloys must be used when the operating temperatures exceed the limits of the superalloys?
42. Which metals are classified as refractory metals?
43. What are some general characteristics of intermetallic compounds?
44. What is the dominant product for which lead is used?
45. What features makes beryllium a unique lightweight metal?
46. What are some of the attractive properties of metallic glasses?
47. What unique property of graphite makes it attractive for elevated-temperature applications?

www.wiley.com/college/degarmo

Chapter 7 CASE STUDY

Nonsparking Wrench

The Ivanwold/Kendoric tool-manufacturing company is considering an expansion of its line of conventional hand tools to include safety tools capable of being used in areas such as gas leaks where the potential of explosion or fire exists. Conventional irons and steels are pyrophoric (i.e., small slivers or fragments can burn in air, forming sparks if dropped or impacted on a hard surface).

You are asked to evaluate potential materials and processes that might be used to manufacture a nonsparking pipe wrench. This product is to be produced in the same shape and range of sizes as conventional pipe wrenches and needs to possess all of the same characteristic properties (strength in the handle, hardness in the teeth, fracture resistance, corrosion resistance, etc.). In addition, the new safety wrench must be nonsparking (or nonpyrophoric).

Your initial review of the nonferrous metals reveals that aluminum is nonpyrophoric but lacks the strength and wear resistance needed in the teeth and jaw region of the wrench. Copper is also nonpyrphoric but is heavier than steel, and this may be unattractive for the larger wrenches. Copper–2% beryllium can be age hardened to provide the strength and hardness properties equivalent to the steel that is currently being used for the jaws of the wrench, but the cost of this material is also quite high. Titanium is difficult to fabricate and may not possess the needed hardness and wear resistance. Mixed materials may create an unattractive galvanic corrosion cell. Both forging and casting appear to be viable means of forming the desired shape. You want to produce a quality product but also wish to make the wrench in the most economical manner possible so that the new line of safety tools is attractive to potential customers.

Suggest some alternative manufacturing systems (materials coupled with companion methods of fabrication) that could be used to produce the desired wrench. What might be the advantages and disadvantages of each? Which of your alternatives would you recommend to your supervisor?

CHAPTER 8

NONMETALLIC MATERIALS: PLASTICS, ELASTOMERS, CERAMICS, AND COMPOSITES

8.1 INTRODUCTION

Because of their wide range of attractive properties, the nonmetallic materials have always played a significant role in manufacturing. Wood has been a key engineering material down through the centuries, and artisans have learned to select and use the various types and grades to manufacture a broad spectrum of quality products. Stone and rock continue to be key construction materials, and clay products can be traced to antiquity. Even leather has been a construction material and was used for fenders in early automobiles.

More recently, however, the family of *nonmetallic materials* has expanded from the natural materials just described and now includes an extensive list of plastics (polymers), elastomers, ceramics, and composites. Most of these are manufactured materials, so a wide variety of properties and characteristics can be obtained. New variations are being created on a continuous basis, and their uses and applications are expanding rapidly. Many observers now refer to a materials revolution as these new materials compete with and complement steel, aluminum, and the other more traditional engineering metals. New products have emerged, utilizing the new properties, and existing products are continually being reevaluated for the possibility of material substitution. As the design requirements of products continue to push the limits of traditional materials, the role of the manufactured nonmetallic materials will no doubt continue to expand.

Because of the breadth and number of nonmetallic materials, we will not attempt to provide information about all of them. Instead, the emphasis will be on the basic nature and properties of the various families so that the reader will be able to determine if they may be reasonable candidates for specific products and applications. For detailed information about specific materials within these families, more extensive and dedicated texts, handbooks, and compilations should be consulted.

8.2 PLASTICS

It is difficult to provide a precise definition of the term *plastics*. From a technical viewpoint, the term is applied to engineered materials characterized by large molecules that are built up by the joining of smaller molecules. On a more practical level, these materials are natural or synthetic resins, or their compounds, that can be molded, extruded, cast, or used as thin films or coatings. They offer low density, low tooling costs, good resistance to corrosion and chemicals, cost reduction, and design versatility. From a chemical viewpoint, most are organic substances containing hydrogen, oxygen, carbon, and nitrogen.

In less than a century, we have gone from a world without plastic to a world where its use and applications are limitless. The United States currently produces more plastic than steel, aluminum, and copper combined. Plastics are used to save lives in applications such as artificial organs, shatter-proof glass, and bullet-proof vests. They reduce the weight of cars, provide thermal insulation to our homes, and encapsulate our medicines. They form the base material in products as diverse as shower curtains, contact lenses, and clothing, and compose some of the primary components in televisions, computers, cell phones, and furniture. Even the Statue of Liberty has a plastic coating to protect it from corrosion.

MOLECULAR STRUCTURE OF PLASTICS

To understand the properties of plastics, it is important to first understand their molecular structure. For simplicity, let's begin with the paraffin-type hydrocarbons, in which carbon and hydrogen combine in the relationship C_nH_{2n+2}. Theoretically, the atoms can link together indefinitely to form very large molecules, extending the series depicted in Figure 8-1. The bonds between the various atoms are all pairs of shared electrons (covalent bonds). Bonding within the molecule, therefore, is quite strong, but the attractive forces between adjacent molecules are much weaker. Because there is no provision for additional atoms to be added to the chain, these molecules are said to be *saturated*.

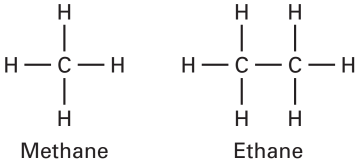

FIGURE 8-1 The linking of carbon and hydrogen to form methane and ethane molecules. Each dash represents a shared electron pair or covalent bond.

Carbon and hydrogen can also form molecules where the carbon atoms are held together by double or triple covalent bonds. Ethylene and acetylene are common examples (Figure 8-2). Because these molecules do not have the maximum number of hydrogen atoms, they are said to be *unsaturated* and are important in the polymerization process, where small molecules link to form large ones with the same constituent atoms.

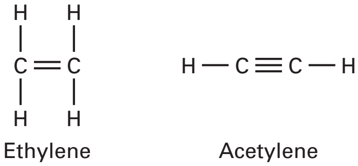

FIGURE 8-2 Double and triple covalent bonds exist between the carbon atoms in unsaturated ethylene and acetylene molecules.

In all of the described molecules, four electron pairs surround each carbon atom and one electron pair is shared with each hydrogen atom. Other atoms or structures can be substituted for carbon and hydrogen. Chlorine, fluorine, or even a benzene ring can take the place of hydrogen. Oxygen, silicon, sulfur, or nitrogen can take the place of carbon. Because of these substitutions, a wide range of organic compounds can be created.

ISOMERS

The same kind and number of atoms can also unite in different structural arrangements, known as *isomers*, and these ultimately behave as different compounds with different engineering properties. Figure 8-3 shows an example of this feature, involving propyl and isopropyl alcohol. Isomers can be considered analogous to allotropism or polymorphism in crystalline materials, where the same material possesses different properties because of different crystal structures.

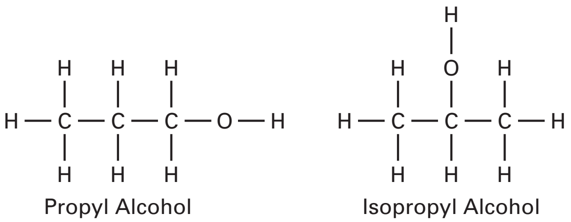

FIGURE 8-3 Linking of eight hydrogen, one oxygen, and three carbon atoms to form two isomers: propyl alcohol and isopropyl alcohol. Note the different locations of the —OH attachment.

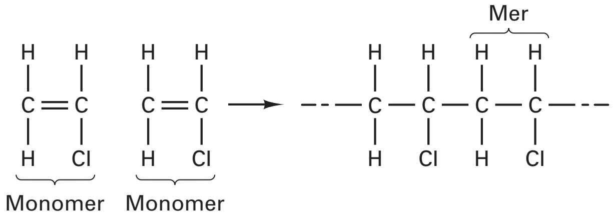

FIGURE 8-4 Addition polymerization—the linking of monomers; in this case, identical ethylene molecules.

FORMING MOLECULES BY POLYMERIZATION

The polymerization process, or linking of molecules, occurs by either an *addition* or *condensation* mechanism. Figure 8-4. illustrates polymerization by addition, where a number of basic units (*monomers*) link together to form a large molecule (*polymer*) in which there is a repeated unit (*mer*). Activators or catalysts, such as benzoyl peroxide, initiate and terminate the chain. Thus, the amount of activator relative to the amount of monomer determines the average molecular weight (or average length) of the polymer chain. The average number of mers in the polymer, known as the *degree of polymerization*, ranges from 75 to 750 for most commercial plastics. Chain length controls many of the properties of a plastic. Increasing the chain length tends to increase toughness, creep resistance, melting temperature, melt viscosity, and difficulty in processing.

Copolymers are a special category of polymer where two different types of mers are combined into the same addition chain. The formation of copolymers (Figure 8-5), analogous to alloys in metals, greatly expands the possibilities of creating new types of plastics with improved physical and mechanical properties. *Terpolymers* further extend the possibilities by combining three different monomers.

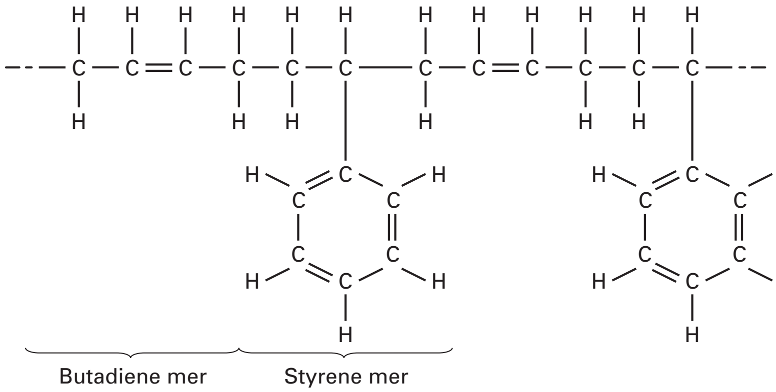

FIGURE 8-5 Addition polymerization with two kinds of mers—here, the copolymerization of butadiene and styrene.

In contrast to polymerization by addition, where all of the original atoms appear in the product molecule, *condensation polymerization* occurs when reactive molecules combine with one another to produce a polymer plus small, by-product molecules, such as water. Heat, pressure, and catalysts are often required to drive the reaction. Figure 8-6 illustrates the reaction between phenol and formaldehyde to form Bakelite, first performed in 1910. The structure of condensation polymers can be either linear chains or a three-dimensional framework in which all atoms are linked by strong, primary bonds.

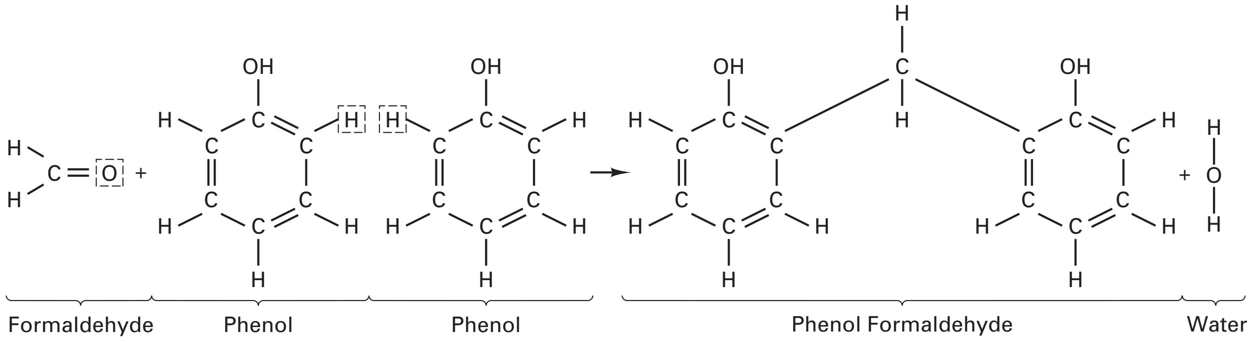

FIGURE 8-6 The formation of phenol–formaldehyde (Bakelite) by condensation polymerization. Note the H_2O or water by-product.

THERMOSETTING AND THERMOPLASTIC MATERIALS

The terms *thermosetting* and *thermoplastic* refer to the material's response to elevated temperature. Addition polymers (or linear condensation polymers) can be viewed as long chains of bonded carbon atoms with attached pendants of hydrogen, fluorine, chlorine, or benzene rings. All of the bonds within the molecules are strong covalent bonds. The attraction between neighboring molecules is through the much weaker van der Waals forces. For these materials, the intermolecular forces strongly influence the mechanical and physical properties. In general, the linear polymers tend to be flexible and tough. Because the intermolecular bonds are weakened by elevated temperature, plastics of this type soften with increasing temperature and the individual molecules can slide over each other in a molding process. When the material is cooled, it becomes harder and stronger. The softening and hardening of these thermoplastic or heat-softening materials can be repeated as often as desired, and no chemical change is involved.

Because thermoplastic materials contain molecules of different lengths, they do not have a definite melting temperature but, instead, soften over a range of temperatures. Above the temperature required for melting, the material can be poured and cast, or formed by injection molding. When cooled to a temperature where it is fully solid, the material can retain its amorphous structure, but with companion properties that are somewhat rubbery. The application of a force produces both elastic and plastic deformation. Large amounts of permanent deformation are available and make this range attractive for molding and extrusion. At still lower temperatures, the bonds become stronger and the polymer is stiffer and somewhat leathery. Many commercial polymers, such as polyethylene, have useful strength in this condition. When further cooled below the glass transition temperature, however, the linear polymer retains its amorphous structure but becomes hard, brittle, and glasslike.

Many thermoplastics can partially *crystallize*[1] when cooled below the melting temperature. This should not be confused with the crystal structures discussed previously in this text. When polymers "crystallize," the chains closely align over appreciable distances, with a companion increase in density. In addition, the polymer becomes stiffer, harder, less ductile, and more resistant to solvents and heat. The ability of a polymer to crystallize depends on the complexity of its molecules, the degree of polymerization (length of the chains), the cooling rate, and the amount of deformation during cooling.

The mechanical behavior of an amorphous (noncrystallized) thermoplastic polymer can be modeled by a common cotton ball. The individual molecules are bonded within by strong covalent bonds and are analogous to the individual fibers of cotton. The bonding forces between molecules are much weaker and are similar to the friction forces between the strands of cotton. When pulled or stretched, plastic deformation occurs by slippage between adjacent fibers or molecular chains. Methods to increase the strength of thermoplastics, therefore, focus on restricting intermolecular slippage. Longer chains have less freedom of movement and are therefore stronger. Connecting adjacent chains to one another with primary bond cross-links, as with the sulfur links when vulcanizing rubber, can also impede deformation. Since the strength of the secondary bonds is inversely related to the separation distance between the molecules, processes such as deformation or crystallization can be used to produce a tight parallel alignment of adjacent molecules and a concurrent increase in strength, stiffness, and density. Polymers with larger side structures, such as chlorine atoms or benzene rings, may be stronger or weaker than those with just hydrogen, depending on whether the dominant effect is the impediment to slippage or the increased separation distance. Branched polymers, where the chains divide in a Y with primary bonds linking all segments of the chain, are often weaker since branching reduces the density and close packing of the chains. Physical, mechanical, and electrical properties all vary with the above changes in structure.

---

[1] It should be noted that the term *crystallize*, when applied to polymers, has a different meaning than when applied to metals and ceramics. Metals and ceramics are crystalline materials, meaning that the atoms occupy sites in a regular, periodic array, known as a lattice. In polymers, it is not the atoms that become aligned, but the molecules. Since van der Waals bonding has a bond strength that is inversely related to the separation distance, the parallel alignment of the crystallized state is a lower-energy configuration and is promoted by slow cooling and equilibrium-type processing conditions.

The four most common thermoplastic polymers are: polyethylene (PE), polypropylene (PP), polystyrene (PS), and polyvinyl chloride (PVC).

In contrast to the thermoplastic polymers, *thermosetting plastics* usually have a highly cross-linked or three-dimensional framework structure in which all atoms are connected by strong, covalent bonds. These materials are generally produced by condensation polymerization where elevated temperature promotes an irreversible reaction, hence the term *thermosetting*. Once set, subsequent heating will not produce the softening observed with the thermoplastics. Instead, thermosetting materials maintain their mechanical properties up to the temperature at which they char or burn. Since deformation requires the breaking of primary bonds, the thermosetting polymers are significantly stronger and more rigid than the thermoplastics. They can resist higher temperatures and have greater dimensional stability, but they also have lower ductility and poorer impact properties.

As a helpful analogy, thermoplastic polymers are a lot like candle wax. They can be softened or melted by heat, and then cooled to assume a solid shape. Thermosets are more like egg whites or bread dough. Heating changes their structure and properties in an irreversible fashion.

Although classification of a polymer as thermosetting or thermoplastic provides insight as to properties and performance, it also has a strong effect on fabrication. For example, thermoplastics can be easily molded. After the hot, soft material has been formed to the desired shape, however, the mold must be cooled so that the plastic will harden and be able to retain its shape upon removal. The repetitive heating and cooling cycles affect mold life, and the time required for the thermal cycles influences productivity. When a part is produced from thermosetting materials, the mold can remain at a constant temperature throughout the entire process, but the setting or curing of the resins now determines the time in the mold. Since the material hardens as a result of the reaction and has strength and rigidity even when hot, product removal can be performed without cooling the mold.

PROPERTIES AND APPLICATIONS

Because there are so many varieties of plastics and new ones are being developed almost continuously, it is helpful to have knowledge of both the general properties of plastics and the unique or specific properties of the various families. General properties of plastics include:

1. *Light weight*. Most plastics have specific gravities between 1.1 and 1.6, compared with about 1.75 for magnesium (the lightest engineering metal).
2. *Corrosion resistance*. Many plastics perform well in hostile, corrosive, or chemical environments. Some are notably resistant to acid corrosion.
3. *Electrical resistance*. Plastics are widely used as insulating materials.
4. *Low thermal conductivity*. Plastics are relatively good thermal insulators.
5. *Variety of optical properties*. Many plastics have an almost unlimited color range, and the color goes throughout, not just on the surface. Both transparent and opaque materials are available.
6. *Formability or ease of fabrication*. Objects can frequently be produced from plastics in a single operation. Raw material can be converted to final shape through such processes as casting, extrusion, and molding. Relatively low temperatures are required for the forming of plastics.
7. *Surface finish*. The same processes that produce the shape also produce excellent surface finish. Additional surface finishing may not be required.
8. *Comparatively low cost*. The low cost of plastics generally applies to both the material itself and the manufacturing process. Plastics frequently offer reduced tool costs and high rates of production.
9. *Low energy content*.

While the attractive features of plastics tend to be in the area of physical properties, the inferior features generally relate to mechanical strength. Plastics can be flexible or rigid, but none of the plastics possess strength properties that approach those of the engineering metals unless they are reinforced in the form of a composite. Their low density allows them to compete effectively on a strength-to-weight (or specific strength) basis, however. Many have low impact strength, although several (such as ABS, high-density polyethylene, and polycarbonate) are exceptions to this rule. Aluminum is nearly 10 times more rigid than a high-rigidity plastic, and steel is 30 times more rigid.

The dimensional stability of plastics tends to be greatly inferior to that of metals, and the coefficient of thermal expansion is rather high. Thermoplastics are quite sensitive to heat, and their strength often drops rapidly as temperatures increase above normal environmental conditions. Thermosetting materials offer good strength retention at elevated temperature but have an upper limit of about 250ºC (500ºF). Low-temperature properties are generally inferior to those of other materials. While the corrosion resistance of plastics is generally good, they often absorb moisture, and this, in turn, decreases strength. Some thermoplastics can exhibit a 50% drop in tensile strength as the humidity increases from 0 to 100%. Radiation, both ultraviolet and particulate, can markedly alter the properties. Many plastics used in an outdoor environment have ultimately failed due to the cumulative effect of ultraviolet radiation. Plastics are also difficult to repair if broken.

Table 8-1 summarizes the properties of a number of common plastics. By considering the information in this table along with the preceding discussion of general properties, it becomes apparent that plastics are best used in applications that require materials with low to moderate strength, light weight, low electrical and/or thermal conductivity, a wide range of available colors, and ease of fabrication into finished products. No other family of materials can offer this combination of properties. Because of their light weight, attractive appearance, and ease of fabrication, plastics have been selected for many packaging and container applications. This classification includes such items as household appliance housings, clock cases, and exteriors of electronic products, where the primary role is to contain the interior mechanisms. Applications such as insulation on electrical wires and handles for hot articles capitalize on the low electrical and thermal conductivities. Soft, pliable, foamed plastics are used extensively as cushioning material. Rigid foams are used inside sheet metal structures to provide compressive strength. Nylon has been used for gears, acrylic for lenses, and polycarbonate for safety helmets and unbreakable windows.

There are many applications where only one or two of the properties of plastics are sufficient to justify their use. When special characteristics are desired that are not normally found in the commercial plastics, composite materials can often be designed that use a polymeric matrix. For example, high directional strength may be achieved by incorporating a fabric or fiber reinforcement within a plastic resin. These materials will be discussed in some detail later in this chapter.

COMMON TYPES OR FAMILIES OF PLASTICS

The following is a brief descriptive summary of the types of plastics listed in Table 8-1.

THERMOPLASTICS

ABS: contains acrylonitrile, butadiene, and styrene; low weight, good strength, and very tough; resists heat, weather, and chemicals quite well; dimensionally stable but flammable

Acrylics: highest optical clarity, transmitting over 90% of light; common trade names include Lucite and Plexiglas; high-impact, flexural, tensile, and dielectric strengths; available in a wide range of colors; resist weathering

Cellulose acetate: wide range of colors; good insulating qualities; easily molded; high moisture absorption in most grades

Cellulose acetate butyrate: higher impact strength and moisture resistance than cellulose acetate; will withstand rougher usage

Ethyl cellulose: high electrical resistance and impact strength; retains toughness at low temperatures

TABLE 8-1 Properties and Major Characteristics of Common Types of Plastics

Material	Specific Gravity	Tensile Strength (1000 ib/in.^{2})	Impact Strength Izod (ft-lb/in. of Notch)	Top Working Temperature [°F(°C)]	Dielectric Strength[b] (V/mil)	24-Hour Water Absorption (%)	Special Characteristics[a]				Common Forms										
							Weatherability	Colorability	Optical Clarity	Chemical Resistance	Injection Molding	Extrusions	Formable Sheet	Film	Fiber	Compression or Transfer Moldings	Castings	Reinforced Plastics	Moldings	Industrial Thermo-setting Laminates	Foam
Thermoplastics																					
ABS material	1.02–1.06	4–8	1.3–10.0		300–400	0.2–0.3	0	×		0	•	•	•								
Acetal	1.4	10	1.5	250(121)	1200	0.22		×		0	•	•									
Acrylics	1.12–1.19	5.5–10	0.2–2.3	200(93)	400–530	0.2–0.4	×		×	0	•	•	•		•			•			
Cellulose acetate	1.25–1.50	3–8	0.75–4.0	260(127)	300–600	2.0–6.0		×	×		•	•	•	•	•						
Cellulose acetate butyrate	1.18–1.24	2–6	0.6–3.2	130(54)	250–350	1.8–2.1	×	×	×												
Cellulose propionate	1.19–1.24	1–5	0.8–9	140(60)	300	1.8–2.1		×	×		•	•	•	•							
Chlorinated polyether	1.4	6	3.3	300(149)	400	0.01				×	•	•									
Ethyl cellulose	1.16	3–6	1.8–4.0	150(66)	350	1.6–2.2		×			•	•									
TFE–fluorocarbon	2.1–2.3	1.5–3	2.5–4.0	500(260)	450	0	×			×		•	•	•	•	•					
CFE–fluorocarbon	2.1–2.15	4.5–6	3.5–3.6	390(199)	550	0	×			×	•	•	•	•							
Nylon	1.1–1.2	8–10	2	250(121)	385–470	0.4–5.5		0	0	0	•	•	•	•	•						
Polycarbonate	1.2	9.5	14	250(121)	400	0.15	×	0		×	•	•									
Polyethylene	0.96	4	10	200(93)	440	0.003		0	×	×	•	•	•	•	•						•
Polypropylene	0.9–1.27	3.4–5.3	1.02	230(110)	520–800	0.03		0	×	×	•	•	•	•	•						
Polystyrene	1.05–1.15	5–9	0.3–0.6	190(8)	400–600	<0.2		×	×	0	•	•	•	•							
Modified polystyrene	1.0–1.1	2.5–6	0.25–11.0	212(100)	300–600	0.03–02		×		×	•	•	•	•							
Vinyl	1.16–1.55	1–5.9	0.25–2.0	220(104)	25–500	0.2–1		×	×	×	•	•	•	•	•						•
Thermosetting plastics																					
Epoxy	1.1–1.7	4–13	0.4–1.5	325(163)	500	0.1–0.5	×	×		×							•	•		•	•
Melamine	1.76–1.98	5–8		350(177)	460	0.1		×		0						•		•		•	
Phenolic	1.2–1.45	5–9	0.25–5	300(149)	100–500	0.2–0.6				0						•	•	•		•	•
Polyester (other than molding compounds)	1.06–1.46	4–10	0.18–0.4	300(149)	340–570	0.5		×	×	0				•	•		•	•	•		
Polyester (alkyd, DAP)	1.6–1.75	3.2–8	3.6–8			0.16–0.67										•		•		•	
Silicone	2.0	3–5	0.2–3.0	550(288)	250–350	0.4–0.5										•	•	•		•	•
Urea	1.41–1.80	4–8.5	0.2–0.5	185(85)	300–600	1–3		×	0												

[a] X denotes a principal reason for its use; 0 indicates a secondary reason.

[b] Short-time ASTM test.

Fluorocarbons: inert to most chemicals; high temperature resistance; very low coefficients of friction (Teflon); used for nonlubricated bearings and nonstick coatings for cooking utensils and electrical irons

Nylon (polyamides): low coefficient of friction; good strength, abrasion resistance, and toughness; excellent dimensional stability; good heat resistance; used for small gears and bearings, zip fasteners, and as monofilaments for textiles, fishing line, and ropes

Polycarbonates: high strength and outstanding toughness; good dimensional stability; transparent or easily colored

Polyethylenes: the most common polymer; inexpensive, tough, good chemical resistance to acids, bases, and salts; high electrical resistance; low strength; easy to shape and join; reasonably clear in thin-film form; subject to weathering via ultraviolet light; flammable; used for grocery bags, milk jugs and other food containers, tubes, pipes, sheeting, and electrical wire insulation. Variations include: low-density polyethylene (LDPE—floats in water), high-density polyethylene (HDPE), ultra-high-molecular-weight polyethylene (UHMW)

PMMA (polymethyl methacrylate): hard, brittle (at room temperature), transparent or easily colored; used for items like tool handles and the interior windows of airplanes

Polypropylene: inexpensive; stronger, stiffer, and better heat resistance than polyethylene; transparent; reasonable toughness; used for beverage containers, luggage, pipes, and ropes

Polystyrenes: high dimensional stability and stiffness with low water absorption; best all-around dielectric; clear, hard, and brittle at room temperature; often used for rigid packaging; can be foamed to produce expanded polystyrene (trade name of Styrofoam); burns readily; softens at about 95°C

Polyvinyl chloride (PVC): general-purpose thermoplastic; good resistance to ultraviolet light (good for outside applications); easily molded or extruded; always used with fillers, plasticizers, and pigments; uses include gas and water pipes as well as window frames

Vinyls: wide range of types, from thin, rubbery films to rigid forms; tear resistant; good aging properties; good dimensional stability and water resistance in rigid forms; used for floor and wall covering, upholstery fabrics, and lightweight water hose; common trade names include Saran and Tygon

THERMOSETS

Epoxies: good strength, toughness, elasticity, chemical resistance, moisture resistance, and dimensional stability; easily compounded to cure at room temperature; used as adhesives, bonding agents, coatings, and in fiber laminates

Melamines: excellent resistance to heat, water, and many chemicals; full range of translucent and opaque colors; excellent electric arc resistance; tableware (but stained by coffee); used extensively in treating paper and cloth to impart water-repellent properties

Phenolics: oldest of the plastics but still widely used; hard, strong, low cost, and easily molded, but rather brittle; resistant to heat and moisture; dimensionally stable; opaque, but with a wide color range; wide variety of forms: sheet, rod, tube, and laminate; trade names include Bakelite.

Polyesters (can be thermoplastic or thermoset): strong and good resistance to environmental influences; uses include boat and car bodies, pipes, vents and ducts, textiles, adhesives, coatings, and laminates

Silicones: heat and weather resistant; low moisture absorption; chemically inert; high dielectric properties; excellent sealants

Urea–formaldehyde: properties similar to those of phenolics but available in lighter colors; useful in containers and housings, but not outdoors; used in lighting fixtures because of translucence in thin sections; as a foam, may be used as household insulation

ADDITIVE AGENTS IN PLASTICS

For most uses, additional materials are incorporated into plastics to (1) impart or improve properties, (2) reduce cost, (3) improve moldability, and/or (4) impart color. These *additive constituents* are usually classified as *fillers and reinforcements*, *plasticizers*, *lubricants*, *coloring agents*, *stabilizers*, *antioxidants*, and *flame retardants*.

Ordinarily, *fillers* comprise a large percentage of the total volume of a molded plastic product. Their primary roles are to improve strength, stiffness, or toughness; reduce shrinkage; reduce weight; or simply serve as an extender, providing cost-saving bulk (often at the expense of reduced moldability). To a large degree, they determine the general properties of a molded plastic. Selection tends to favor materials that are much less expensive than the plastic resin. Some of the most common fillers and their properties are:

1. *Wood flour* (fine sawdust): a general-purpose filler; low cost with fair strength; good moldability
2. *Cloth fibers*: improved impact strength; fair moldability
3. *Macerated cloth*: high impact strength; limited moldability
4. *Glass fibers*: high strength; dimensional stability; translucence
5. *Mica*: excellent electrical properties and low moisture absorption
6. *Calcium carbonate, silica, talc, and clay*: serve primarily as extenders

When fillers are used with a plastic resin, the resin acts as a binder, surrounding the filler material and holding the mass together. The surface of a molded part, therefore, will be almost pure resin with no exposed filler. Cutting or scratching through the shiny surface will expose the less attractive filler.

Coloring agents may be either *dyes*, which are soluble in the resins, or insoluble *pigments*, which impart color simply by their presence. In general, dyes are used for transparent plastics and pigments for the opaque ones. Optical brighteners can also be used to enhance appearance. Carbon black can provide both a black color and electrical conductivity.

Plasticizers can be added in small amounts to reduce viscosity and improve the flow of the plastic during molding or to increase the flexibility of thermoplastic products by reducing the intermolecular contact and strength of the secondary bonds between the polymer chains. When used for molding purposes, the amount of plasticizer is governed by the intricacy of the mold. In general, it should be kept to a minimum because it is likely to affect the stability of the finished product through a gradual aging loss. When used for flexibility, plasticizers should be selected with minimum volatility, so as to impart the desired property for as long as possible.

Lubricants such as waxes, stearates, and soaps can be added to improve the moldability of plastics and to facilitate removal of parts from the mold. They are also used to keep thin polymer sheets from sticking to each other when stacked or rolled. Only a minimum amount should be used, however, because the lubricants adversely affect most engineering properties.

Heat, light (especially ultraviolet), and oxidation tend to degrade polymers. Stabilizers and antioxidants can be added to retard these effects. Flame retardants can be added when nonflammability is important. Antistatic agents allow for the migration of electrical charge and may be incorporated into plastics used for applications such as electronics packaging. Antimicrobial additives can provide long-term protection from both fungus (such as mildew) and bacteria. Fibers can be incorporated to increase strength and stiffness, and metal flakes, fibers, or powders can modify electrical and magnetic properties. Table 8-2 summarizes the purposes of the various additives.

ORIENTED PLASTICS

Because the intermolecular bond strength increases with reduced separation distance, any processing that aligns the molecules parallel to the applied load can be used to give the long-chain thermoplastics high strength in a given direction.[2] This orientation process

---

[2] The effects of orienting can be observed in the common disposable thin-walled plastic drinking cup. Start at the top lip. Place a sharp bend in the lip and then tear down the side wall. The material tears easily. Move around the lip about 1/2 inch and make another side-wall tear—also easy. Now try to tear across the strip that you have created. This tear is much more difficult, since you are tearing across molecules that have been oriented vertically along the cup walls by the cup-forming operation.

TABLE 8-2 Additive Agents in Plastics and Their Purpose

Type	Purpose
Fillers	Enhance mechanical properties, reduce shrinkage, reduce weight, or provide bulk
Plasticizer	Increase flexibility, improve flow during molding, reduce elastic modulus
Lubricant	Improve moldability and extraction from molds
Coloring agents (dyes and pigments)	Impart color
Stabilizers	Retard degradation due to heat or light
Antioxidants	Retard degradation due to oxidation
Flame retardants	Reduce flammability

can be accomplished by a forming process, such as stretching, rolling, or extrusion. The material is usually heated prior to the orienting process to aid in overcoming the intermolecular forces and is cooled immediately afterward to "freeze" the molecules in the desired orientation.

Orienting may increase the tensile strength by more than 50%, but a 25% increase is more typical. In addition, the elongation may be increased by several hundred percent. If the oriented plastics are reheated, they tend to deform back toward their original shape, a phenomenon known as *viscoelastic memory*. The various shrink-wrap materials are examples of this effect.

ENGINEERING PLASTICS

The standard polymers tend to be lightweight, corrosion-resistant materials with low strength and low stiffness. They are relatively inexpensive and are readily formed into a wide range of useful shapes, but they are not suitable for use at elevated temperatures.

In contrast, a group of plastics has been developed with improved thermal properties (up to 350°C, or 650°F), enhanced impact and stress resistance, high rigidity, superior electrical characteristics, excellent processing properties, and little dimensional change with varying temperature and humidity. These true engineering plastics include the polyamides, polyacetals, polyacrylates, polycarbonates, modified polyphenylene oxides, polybutylene terephtalates, polyketones, polysulfones, polyetherimides, and liquid crystal polymers. While stabilizers, fibrous reinforcements, and particulate fillers can upgrade the conventional plastics, there is usually an accompanying reduction in other properties. The engineering plastics offer a more balanced set of properties. They are usually produced in small quantities, however, and are often quite expensive.

Materials producers have also developed electroconductive polymers with tailored electrical and electronic properties and high–crystalline polymers with properties comparable to some metals.

PLASTICS AS ADHESIVES

Polymeric adhesives are used in many industrial applications. They are quite attractive for the bonding of dissimilar materials, such as metals to nonmetals, and have even been used to replace welding or riveting. A wide range of mechanical properties are available through variations in composition and additives, and a variety of curing mechanisms can be used. Examples can be found from the thermoplastics (hot-melt glues), thermosets (two-part epoxies), and even elastomers (silicone adhesives). The seven most common structural adhesives are epoxies, urethanes, cyanoacrylates, acrylics, anaerobics, hot melts, and silicones. Selection usually involves consideration of the manufacturing conditions, the substrates to be bonded, the end-use environment, and cost. The various features of adhesive bonding are discussed in greater detail in Chapter 35.

PLASTICS FOR TOOLING

Polymers can also provide inexpensive tooling for applications where pressures, temperatures, and wear requirements are not extreme. Because of their wide range of properties, their ease of conversion into desired shapes, and their excellent properties when loaded in compression, plastics have been widely used in applications such as jigs, fixtures, and a wide variety of forming-die components. Both thermoplastic and thermoset polymers (particularly the cold-setting types) have been used. By using plastics in these applications, costs can be reduced and smaller quantities of products can be economically justified. In addition, the tooling can often be produced in a much shorter time, enabling quicker production.

FOAMED PLASTICS

A number of polymeric materials can be produced in the form of foams that incorporate arrays of gaseous voids in their structure. These materials are extremely versatile, with properties ranging from soft and flexible to hard and rigid. The softer foams are generally used for cushioning in upholstery and automobile seats, and in various applications such as vibration absorbers. Semirigid foams find use in floatation devices, refrigerator insulation, disposable food trays and containers, building insulation panels, and sound attenuation. Rigid foams have been used as construction materials for boats, airplane components, electronic encapsulation, and furniture.

Foamed materials can be made by a wide variety of processes; they can either be made as discrete products or used as a "foamed-in-place" material. In addition to the sound-and vibration-attenuation properties mentioned above, foams offer light weight and the possibility of improved stiffness and reduced cost (less material to make the part).

POLYMER COATINGS

Polymer coatings are used extensively to enhance appearance, but they have also assumed a significant role in providing corrosion protection. The tough, thick coatings must adhere to the substrate; not chip or peel; and resist exposure to heat, moisture, salt, and chemicals. Polymer coatings have been replacing chrome and cadmium due to environmental concerns relating to the heavy metals. In addition, polymers provide better resistance to the effects of acid rain.

PLASTICS VERSUS OTHER MATERIALS

Polymeric materials have successfully competed with traditional materials in a number of areas. Plastics have replaced glass in containers and other transparent products. PVC pipe and fittings compete with copper and brass in many plumbing applications. Plastics have even replaced ceramics in areas as diverse as sewer pipe and lavatory facilities.

While plastics and metals are often viewed as competing materials, their engineering properties are really quite different. Many of the attractive features of plastics have already been discussed. In addition to these, we can add (1) the ability to be fabricated with lower tooling costs; (2) the ability to be molded at the same rate as product assembly, thereby reducing inventory; (3) a possible reduction in assembly operations and easier assembly through snap fits, friction welds, or the use of self-tapping fasteners; (4) the ability to reuse manufacturing scrap; and (5) reduced finishing costs.

Metals, on the other hand, are often cheaper and offer faster fabrication speeds and greater impact resistance. They are considerably stronger and more rigid and can withstand traditional paint cure temperatures. In addition, resistance to flames, acids, and various solvents is significantly better. Table 8-3 compares the mechanical properties of selected polymers to annealed, commercially pure aluminum and annealed 1040 steel. Note the mechanical superiority of the metals, even though they are being presented in their weakest condition. Table 8-4 compares the cost per pound and elastic modulus of several engineering plastics with values for steel and aluminum. When the size of the part is fixed, cost per cubic inch becomes a more valid comparison, and the figures show plastics to be quite competitive because of their low density.

TABLE 8-3 Property Comparison of Metals and Polymers

Material	Condition	TS (ksi)	E (10^s psi)	Elongation
Polyethylene	Branched	2	0.025	90–650
Polyethylene	Crystallized	4	0.100	50–800
Polyvinylchloride	Cl-sides	8	0.375	2–40
Polystyrene	Benzene-sides	7	0.500	1–3
Bakelite	Framework	7	1.0	1
Aluminum	Annealed	13	10.0	15–30
1040 steel	Annealed	75	30.0	30

TABLE 8-4 Comparison of Materials (Modulus and Cost)[a]

Material	Modulus ($\times 10^6$ psi)	\$/pound	\$/in.^{3}
Aluminum	10.0	1.20	0.122
Steel	30.0	0.30–0.40	0.075–0.10
Nylon	0.1	1.80	0.129
ABS	0.3	1.00	0.034
High-density polyethylene	0.1	0.80	0.030
Polycarbonate	0.35	2.25	0.097
Polypropylene	0.2	0.80	0.025
Polystyrene	0.3	0.90	0.027
Epoxy (bisphenol)	0.45	1.15	0.036

[a] Cost figures are 2006 values and are clearly subject to change.

The automotive industry is a good indication of the expanding use of plastics. Polymeric materials now account for over 250 pounds of a typical vehicle, compared to only 25 pounds in 1960, 105 in 1970, 195 in 1980, and 229 in 1990. In addition to the traditional application areas of dashboards, interiors, body panels, and trim, plastics are now being used for bumpers, intake manifolds, valve covers, fuel tanks, and fuel lines and fittings. If we include clips and fasteners, there are now over 1000 plastic parts in a typical automobile.

RECYCLING OF PLASTICS

Because of the wide variety of types and compositions, all with similar physical properties, the recycling of mixed plastics is far more difficult than the recycling of mixed metals. These materials must be sorted not only on the basis of resin type, but also by type of filler and color.

If the various types of resins can be identified and kept separate, many of the thermoplastic materials can be readily recycled into useful products. Packaging is the largest single market for plastics, and there is currently a well-established network to collect and recycle PET (the polyester used in soft-drink bottles) and high-density polyethylene (the plastic used in milk, juice, and water jugs). The properties generally deteriorate with recycling, however, so applications must often be downgraded with reuse. PET is being recycled into new bottles, fiber-fill insulation, and carpeting. Recycled polyethylene is used for new containers, plastic bags, and recycling bins. Polystyrene has been recycled into cafeteria trays and videocassette cases. Plastic “lumber” offers weather and insect resistance and a reduction in required maintenance (but at higher cost than traditional wood).

When thermoplastics and thermosets are mixed in varying amounts, the material is often regarded more as an alternative fuel (competing with coal and oil) than as a resource for recycling into quality products. On an equivalent-weight basis, polystyrene and polyethylene have heat contents greater than fuel oil and far in excess of paper and wood. As a recycling alternative, decomposition processes can be used to break polymers down into useful building blocks. Hydrolysis (exposure to high-pressure steam) and pyrolysis (heating in the absence of oxygen) methods can be used to convert plastics into simple petrochemical materials, but even these processes require some control of the input material. As a result, only about one-third of all plastic now finds a second life.

8.3 ELASTOMERS

The term *elastomer,* a contraction of the words *elastic polymer,* refers to a special class of linear polymers that display an exceptionally large amount of elastic deformation when a force is applied. Many can be stretched to several times their original length. Upon release of the force, the deformation can be completely recovered as the material quickly returns to its original shape. In addition, the cycle can be repeated numerous times with identical results, as with the stretching of a rubber band.

The elastic properties of most engineering materials are the result of a change in the distance between adjacent atoms (i.e., bond length) when loads are applied. Hooke’s law is commonly obeyed, where twice the force produces twice the stretch. When the applied load is removed, the interatomic forces return all of the atoms to their original position and the elastic deformation is recovered completely.

In the elastomeric polymers, the linear chain-type molecules are twisted or curled, much like a coil spring. When a force is applied, the polymer stretches by uncoiling. When the load is removed, the molecules recoil as the bond angles return to their original, unloaded values, and the material returns to its original size and shape. The relationship between force and stretch, however, does not follow Hooke’s law.

In reality, the behavior of elastomers is a bit more complex. While the chains indeed uncoil when placed under load, they can also slide with respect to one another to produce a small degree of viscous deformation. When the load is removed, the molecules return to their coiled shape, but the viscous deformation is not recovered and there is some permanent change in shape.

By linking the coiled molecules to one another by strong covalent bonds, a process known as *cross-linking*, it is possible to restrict the viscous deformation while retaining the large elastic response. The elasticity or rigidity of the product can be determined by controlling the number of cross-links. Small amounts of cross-linking leave the elastomer soft and flexible, as in a rubber band. Additional cross-linking further restricts the uncoiling, and the material becomes harder, stiffer, and more brittle, like the rubber used in bowling balls. Since the cross-linked bonds can only be destroyed by extremely high temperatures, the engineering elastomers can be tailored to possess a wide range of stable properties and stress–strain characteristics.

If placed under constant strain, however, even highly cross-linked material will exhibit some viscous flow over time. Consider a rubber band stretched between two nails. While the dimensions remain fixed, the force or stress being applied to the nails will continually decrease. This phenomenon is known as *stress relaxation*. The rate of this relaxation depends on the material, the force, and the temperature.

RUBBER

Natural rubber, the oldest commercial elastomer, is made from latex, a secretion from the inner bark of a tropical tree. In its crude form it is an excellent adhesive, and many cements can be made by dissolving it in suitable solvents. Its use as an engineering material dates from 1839, when Charles Goodyear discovered that it could be vulcanized (cross-linked) by the addition of about 30% sulfur followed by heating to a suitable temperature. The cross-linking restricts the movement of the molecular chains and imparts strength. Subsequent research found that the properties could be further improved by various additives (such as carbon black), which act as stiffeners, tougheners, and antioxidants. Accelerators have been found that speed up the vulcanization process. These have enabled a reduction in the amount of sulfur, such that most rubber compounds now contain less than 3% sulfur. Softeners can be added to facilitate processing, and fillers can be used to add bulk.

Rubber can now be compounded to provide a wide range of characteristics, ranging from soft and gummy to extremely hard. When additional strength is required, textile cords or fabrics can be coated with rubber. The fibers carry the load, and the rubber serves as a matrix to join the cords while isolating them from one another to prevent chafing. For severe service, steel wires can be used as the load-bearing medium. Vehicle tires and heavy-duty conveyor belts are examples of this technology.

Natural rubber compounds are outstanding for their flexibility; good electrical insulation; low internal friction; and resistance to most inorganic acids, salts, and alkalis. However, they have poor resistance to petroleum products, such as oil, gasoline, and naphtha. In addition, they lose their strength at elevated temperatures, so it is advisable that they not be used at temperatures above 80ºC (175ºF). Unless they are specially compounded, they also deteriorate fairly rapidly in direct sunlight.

ARTIFICIAL ELASTOMERS

In an attempt to overcome some of these limitations, as well as the uncertainty in the supply and price of natural rubber, a number of synthetic or artificial elastomers have been developed and have come to assume great commercial importance. While some are a bit inferior to natural rubber, others offer distinctly different and, frequently, superior properties. Polyisoprene is the synthetic that is closest to duplicating natural rubber. Styrene–butadiene is an oil-derivative, high-volume substitute for natural rubber that has become the standard material for passenger-car tires. For this material, some form of reinforcement is generally required to provide the desired tensile strength, tear resistance, and durability. Neoprenes have properties similar to natural rubber, with better resistance to oils, ozone, oxidation, and flame. They are used for a wide range of applications, including automotive hoses and belts, footwear, tires, mounting cushions, and seals. A number of other artificial elastomers are available and are identified by both chemical and commercial trade names.

Silicone rubbers look and feel like organic rubber but are based on a linear chain of silicon and oxygen atoms (not carbon). Various mixes and blends offer retention of physical properties at elevated temperatures [as hot as 230ºC (450ºF)]; flexibility at low temperatures [as low as −100ºC (−150ºF)]; resistance to acids, bases, and other aqueous and organic fluids; resistance to flex fatigue; ability to absorb energy and provide damping; good weatherability; ozone resistance; and availability in a variety of different hardnesses.

Elastomers can also be classified as thermosets or thermoplastics. The thermoset materials are formed during the irreversible vulcanization (cross-linking) process, which may be somewhat time consuming. Thermoplastic elastomers eliminate the vulcanization cycle and can be processed into products by all of the conventional thermoplastic polymer processes (injection molding, extrusion, blow molding, thermoforming, and others). They soften at elevated temperatures, which the thermosets easily withstand, but offer good low-temperature flexibility, scrap recyclability, availability in a variety of colors, and high gripping friction. Unfortunately, many are more costly than the conventional rubber materials.

SELECTION OF AN ELASTOMER

Elastomeric materials can now be selected and used for a wide range of engineering applications, where they impart properties that include shock absorption, noise and vibration control, sealing, corrosion protection, abrasion protection, friction modification, electrical and thermal insulation, waterproofing, and load bearing. Selection of an elastomer for a specific application requires consideration of many factors, including the mechanical and physical service requirements, the operating environment (including temperature), the desired lifetime, the ability to manufacture the product, and cost. There are a number of families, and within each family there exists a wide range of available properties. Moreover, almost any physical or mechanical property can be altered through additives, which can also be used to enhance processing or reduce cost, and modifications of the processing parameters.

Table 8-5 lists some of the more common artificial elastomers, along with natural rubber for comparison, and gives their properties and some typical uses.

ELASTOMERS FOR TOOLING APPLICATIONS

When an elastomer is confined, it acts like a fluid, transmitting force uniformly in all directions. For this reason, elastomers can be substituted for one-half of a die set in sheet-metal-forming operations. Elastomers are also used to perform bulging and to form reentrant sections that would be impossible to form with rigid dies except through the use of costly multipiece tooling. The engineering elastomers have become increasingly popular as tool materials because they can be compounded to range from very soft to very hard; hold up well under compressive loading; are impervious to oils, solvents, and other similar fluids; and can be made into a desired shape quickly and economically. In addition, the elastomeric tooling will not mark or damage highly polished or prepainted surfaces. The urethanes are currently the most popular elastomer for tooling applications.

■ 8.4 CERAMICS

The first materials used by humans were natural materials such as wood and stone. The discovery that certain clays could be mixed, shaped, and hardened by firing led to what was probably the first man-made material. Traditional ceramic products, such as bricks and pottery, have continued to be key materials throughout history. More recently, *ceramic materials* have assumed important roles in a number of engineering applications. Most of these utilize their outstanding physical properties, including the ability to withstand high temperatures, provide a wide variety of electrical and magnetic properties, and resist wear. In general, ceramics are hard, brittle, high-melting-point materials with low electrical and thermal conductivity, low thermal expansion, good chemical and thermal stability, good creep resistance, high elastic modulus, and high compressive

TABLE 8-5 Properties and Uses of Common Elastomers

			Tensile Strength (psi)		Elongation (%)		Service Temperature [F(C)]		Resistance to:[a]			
Elastomer	Specific Gravity	Durometer Hardness	Pure Gum	Black	Pure Gum	Black	Min.	Max.	Oil	Water Swell	Tear	Typical Application
Natural rubber	0.93	20–100	2500	4000	75	650	−65(54)	180(82)	P	G	G	Tires, gaskets, hose
Polyacrylate	1.10	40–100	350	2500	600	400	0(−18)	300(149)	G	P	F	Oil hose, O-rings
EDPM (ethylene propylene)	0.85	30–100	1	3		500	−40(−40)	300(149)	P	G	G	Electric insulation, footwear, hose, belts
Chlorosulfonated polyethylene	1.10	50–90	4	2		400	−65(−54)	250(121)	G	E	G	Tank lining, chemical hose; shoes, soles and heels
Polychloroprene (neoprene)	1.23	20–90	3500	4000	800	550	−50(−46)	225(107)	G	G	G	Wire insulation, belts, hose, gaskets, seals, linings
Polybutadiene	1.93	30–100	1000	3000	800	550	−80(−62)	212(100)	P	P	G	Tires, soles and heels, gaskets, seals
Polyisoprene	0.94	20–100	3000	4000		600	−65(−54)	180(82)	P	G	G	Same as natural rubber
Polysulfide	1.34	20–80	350	1000	600	400	−65(−54)	180(82)	E	G	G	Seals, gaskets, diaphragms, valve disks
SBR (styrene-butadiene)	0.94	40–100	2			1200	−65(−54)	225(107)	P	G	G	Molded mechanical goods, disposable pharmaceutical items
Silicone	1.1	25–90		1200		450	−120(−84)	450(232)	F	E	P	Electric insulation, seals, gaskets, O-rings
Epichlorohydrin	1.27	40–90		2		325	−50(−46)	250(121)	G	G	G	Diaphragms, seals, molded goods, low-temperature parts
Urethane	0.85	62–95	5000		700		−54(−65)	212(100)	E	F	E	Caster wheels, heels, foam padding
Fluoroelastomers	1.65	60–90	1	3		400	−40(−40)	450(232)	E	E	F	O-rings, seals, gaskets, roll coverings

[a] P, poor; F, fair; G, good; E, excellent.

strengths that are retained at elevated temperature. A family of "structural ceramics" has also emerged, and these materials now provide enhanced mechanical properties that make them attractive for many load-bearing applications.

Glass and glass products now account for about half of the ceramic materials market. Advanced ceramic materials (including the structural ceramics, electrical and magnetic ceramics, and fiber-optic material) compose another 20%. Whiteware and porcelain enameled products (such as household appliances) account for about 10% each, while refractories and structural clay products make up most of the difference.

NATURE AND STRUCTURE OF CERAMICS

Ceramic materials are compounds of metallic and nonmetallic elements (often in the form of oxides, carbides, and nitrides) and exist in a wide variety of compositions and forms. Most have crystalline structures, but unlike metals, the bonding electrons are generally captive in strong ionic or covalent bonds. The absence of free electrons makes the ceramic materials poor electrical conductors and results in many being transparent in thin sections. Because of the strength of the primary bonds, most ceramics have high melting temperatures, high rigidity, and high compressive strength.

The crystal structures of ceramic materials can be quite different from those observed in metals. In many ceramics, atoms of significantly different size must be accommodated within the same structure, and the interstitial sites, therefore, become extremely important. Charge neutrality must be maintained throughout ionic structures. Covalent materials must have structures with a limited number of nearest neighbors, set by the number of shared-electron bonds. These features often dictate a less efficient packing, and hence lower densities, than those observed for metallic materials. As with metals, the same chemistry material can often exist in more than one structural arrangement (polymorphism). Silica (SiO_2), for example, can exist in three forms—quartz, tridymite, and crystobalite—depending on the conditions of temperature and pressure.

Ceramic materials can also exist in the form of chains, similar to the linear molecules in plastics. Like the polymeric materials having this structure, the bonds between the chains are not as strong as those within the chains. Consequently, when forces are applied, cleavage or shear can occur between the chains. In other ceramics, the atoms bond in the form of sheets, producing layered structures. Relatively weak bonds exist between the sheets, and these interfacial surfaces become the preferred sites for fracture. Mica is a good example of such a material. A noncrystalline structure is also possible in solid ceramics. This *amorphous* condition is referred to as the *glassy state*, and the materials are known as *glasses*.

Elevated temperatures can be used to decrease the viscosity of glass, allowing the atoms to move as groups and the material to be shaped and formed. When the temperature is dropped, the material again becomes hard and rigid. The crystalline ceramics do not soften, but they can creep at elevated temperature by means of grain boundary sliding. Therefore, when ceramic materials are produced for elevated-temperature service, large grain size is generally desired.

CERAMICS ARE BRITTLE BUT CAN BE TOUGH

Both crystalline and noncrystalline ceramics tend to be brittle. The glass materials have a three-dimensional network of strong primary bonds that impart brittleness. The crystalline materials do contain dislocations, but for ceramic materials, brittle fracture tends to occur at stresses lower than those required to induce plastic deformation.

There is little that can be done to alter the brittle nature of ceramic materials. However, the energy required to induce brittle fracture (the material toughness) can often be increased. Tempered glass uses rapid cooling of the surfaces to induce residual surface compression. The surfaces cool, contract, and harden. As the center then cools and tries to contract, it compresses or squeezes the surface. Since fractures initiate on the surface, the applied stresses must first cancel the residual compression before they can become tensile. Cermet materials surround particles of brittle ceramic with a continuous matrix of tough, fracture-resistant metal. Ceramic–ceramic composites use weak interfaces that separate or delaminate to become crack arrestors or crack diverters, allowing the structure to continue carrying the load.

Stabilization involves compounding or alloying to eliminate crystal structure changes and the dimensional expansions or contractions that accompany them. Nonuniform heating or cooling can now occur without the stresses that induce fracture. Transformation toughening stops the progress of a crack by crystal structure changes that occur when volume expansion is permitted. Fine grain size, high purity, and high density can be promoted by enhanced processing, and these all act to improve toughness.

CLAY AND WHITEWARE PRODUCTS

Many ceramic products are still based on *clay*, to which various amounts of quartz and feldspar and other materials are added. Selected proportions are mixed with water, shaped, dried, and fired to produce the structural clay products of brick, roof and structural tiles, drainage pipe, and sewer pipe, as well as the *whiteware* products of sanitary ware (toilets, sinks, and bathtubs), dinnerware, china, decorative floor and wall tile, pottery, and other artware.

REFRACTORY MATERIALS

Refractory materials are ceramics that have been designed to provide acceptable mechanical or chemical properties at high operating temperatures. They may take the form of bricks and shaped products, bulk materials (often used as coatings), and insulating ceramic fibers. Most are based on stable oxide compounds, where the coarse oxide particles are bonded by finer refractory material. Various carbides, nitrides, and borides can also be used in refractory applications.

Refractory ceramics fall into three distinct classes: *acidic*, *basic,* and *neutral*. Common acidic refractories are based on silica (SiO_2) and alumina (Al_2O_3) and can be compounded to provide high-temperature resistance along with high hardness and good mechanical properties. The insulating tiles on the U.S. space shuttle were made from machinable silica ceramic. Magnesium oxide (MgO) is the core material for most basic refractories. These are generally more expensive than the acidic materials but are often required in metal-processing applications to provide compatibility with the metal. Neutral refractories, containing chromite (Cr_2O_3), are often used to separate the acidic and basic materials since they tend to attack one another. The combination is often attractive when a basic refractory is necessary on the surface for chemical reasons, and the cheaper acidic material is used beneath to provide strength and insulation. Figure 8-7 shows a variety of high-strength alumina components.

ABRASIVES

Because of their high hardness, ceramic materials, such as silicon carbide and aluminum oxide (alumina), are often used for abrasive applications, such as grinding. Materials such as manufactured diamond and cubic boron nitride have such phenomenal properties that they are often termed *superabrasives*. Materials used for abrasive applications are discussed in greater detail in Chapter 29.

FIGURE 8-7 A variety of high-strength alumina (acid refractory) components, including a filter for molten metal. *(Courtesy of Wesgo Division, GTE, Hayward, CA.)*

CERAMICS FOR ELECTRICAL AND MAGNETIC APPLICATIONS

Ceramic materials also offer a variety of useful electrical and magnetic properties. Some ceramics, such as silicon carbide, are used as resistors and heating elements for electric furnaces. Others have semiconducting properties and are used for thermistors and rectifiers. Dielectric, piezoelectric, and ferroelectric behavior can also be utilized in many applications. Barium titanate, for example, is used in capacitors and transducers. High-density clay-based ceramics and aluminum oxide make excellent high-voltage insulators. The magnetic ferrites have been used in a number of magnetic applications. Considerable attention has also been directed toward the “high-temperature”ceramic superconductors.

GLASSES

When some molten ceramics are cooled at a rate that exceeds a critical value, the material solidifies into a hard, rigid, noncrystalline (i.e., amorphous) solid, known as a *glass*. Most commercial glasses are based on silica (SiO_2), lime ($CaCO_3$), and sodium carbonate ($NaCO_3$), with additives to alter the structure or reduce the melting point. Various chemistries can be used to optimize optical properties, thermal stability, and resistance to thermal shock.

Glass is soft and moldable when hot, making shaping rather straightforward. When cool and solid, glass is strong in compression but brittle and weak in tension. In addition, most glasses exhibit excellent resistance to weathering and attack by most chemicals. Traditional applications include automotive and window glass, bottles and other containers, light bulbs, mirrors, lenses, and fiberglass insulation. There is also a wide variety of specialty applications, including glass fiber for fiber-optic communications, glass fiber to reinforce composites, cookware, TV tubes and monitors, and a variety of medical and biological products. Glass and other ceramic fibers have been used for filtration, where they provide a chemical inertness and the possibility to withstand elevated temperature.

GLASS CERAMICS

These materials are first shaped as a glass and then heat treated to promote partial devitrification or crystallization of the material, resulting in a structure that contains large amounts of crystalline material within an amorphous base. Since they were initially formed as a glass, glass ceramics do not have the strength-limiting or fracture-inducing porosity that is characteristic of the conventional sintered ceramics. Strength is greater than with the traditional glasses, and the crystalline phase helps to retard creep at high temperatures. Since the thermal expansion coefficient is near zero, the material has good resistance to thermal shock. The white Pyroceram (trade name) material commonly found in Corningware is a common example of a glass ceramic.

CERMETS

Cermets are combinations of metals and ceramics (usually oxides, carbides, nitrides, or carbonitrides) united into a single product by the procedures of powder metallurgy. This usually involves pressing mixed powders at pressures ranging from 70 to 280 MPa (10 to 40 ksi) followed by sintering in a controlled-atmosphere furnace at about 1650ºC (3000ºF). Cermets combine the high hardness and refractory characteristics of ceramics with the toughness and thermal shock resistance of metals. They are used as crucibles, jet engine nozzles, and aircraft brakes, as well as in other applications requiring hardness, strength, and toughness at elevated temperature. Cemented tungsten carbide (tungsten carbide particles cemented in a cobalt binder) has been used in dies and cutting tools for quite some time. The more advanced cermets now enable higher cutting speeds than those achievable with high-speed tool steel, tungsten carbide, or the coated carbides. See Chapter 22.

CEMENTS

Various ceramic materials can harden by chemical reaction, enabling their use as a binder that does not require firing or sintering. Sodium silicate hardens in the presence of carbon dioxide and is used to produce sand cores in metal casting. Plaster of paris and portland cement both harden by hydration reactions.

CERAMIC COATINGS

A wide spectrum of enamels, glazes, and other ceramic coatings have been developed to decorate, seal, and protect substrate materials. Porcelain enamel can be applied to carbon steel in the perforated tubs of washing machines, where the material must withstand the scratching of zippers, buttons, and snaps along with the full spectrum of laundry products. Chemical reaction vessels are often glass lined.

CERAMICS FOR MECHANICAL APPLICATIONS: THE STRUCTURAL AND ADVANCED CERAMICS

Because of the strong ionic or covalent bonding and high shear resistance, ceramic materials tend to have low ductility and high compressive strength. Theoretically, ceramics could also have high tensile strengths. However, because of their high melting points and lack of ductility, most ceramics are processed in the solid state, where products are made from powdered material. After various means of compaction, voids remain between the powder particles, and a portion of these persists through the sintering process. Contamination can also occur on particle surfaces and then become part of the internal structure of the product. As a result, full theoretical density is extremely difficult to achieve, and small cracks, pores, and impurity inclusions tend to be an integral part of most ceramic materials. These act as mechanical stress concentrators. As loads are applied, the effect of these flaws cannot be reduced through plastic flow, and the result is generally a brittle fracture. Applying the principles of fracture mechanics,[3] we find that ceramics are sensitive to very small flaws. Tensile failures typically occur at stress values between 20 and 210 MPa (3 and 30 ksi), more than an order of magnitude less than the corresponding strength in compression.

Since the number, size, shape, and location of the flaws are likely to differ from part to part, ceramic parts produced from identical material by identical methods often fail at very different applied loads. As a result, the mechanical properties of ceramic products tend to follow a statistical spread that is much less predictable than for metals. This feature tends to limit the use of ceramics in critical high-strength applications.

If the various flaws and defects could be eliminated or reduced to very small size, high and consistent tensile strengths could be obtained. Hardness, wear resistance, and strength at elevated temperatures would be attractive properties, along with light weight (specific gravities of 2.3 to 3.85), high stiffness, dimensional stability, low thermal conductivity, corrosion resistance, and chemical inertness. Reliability might be low, however, and failure would still occur by brittle fracture. Because of the poor thermal conductivity, thermal shock may be a problem. The cost of these “flaw-free” or “restricted flaw” materials would be rather high. Joining to other engineering materials and machining would be extremely difficult, so products would have to be fabricated through the use of net-shape processing.

Advanced, structural, or engineering ceramics is an emerging technology with a broad base of current and potential applications. The base materials currently include silicon nitride, silicon carbide, partially stabilized zirconia, transformation-toughened zirconia, alumina, sialons, boron carbide, boron nitride, titanium diboride, and ceramic composites (such as ceramic fibers in a glass, glass–ceramic, or ceramic matrix). The materials and products are characterized by high strength, high fracture toughness, fine grain size, and little or no porosity. Applications include a wide variety of wear-

---

[3] According to the principles of fracture mechanics, fracture will occur in a brittle material when the fracture toughness, K, is equal to a product involving a dimensionless geometric factor, α, the applied stress, σ, and the square root of the number π (3.14) times the size of the most critical flaw, a.

$$K = \alpha\,\sigma\,(\pi a)^{1/2}$$

When the right–hand side is less than the value of K, the material bears the load without breaking. Fracture occurs when the combination of applied stress and flaw size equals the critical value K. Since K is a material property, any attempt to increase the load or stress a material can withstand must be achieved by a companion reduction in flaw size.

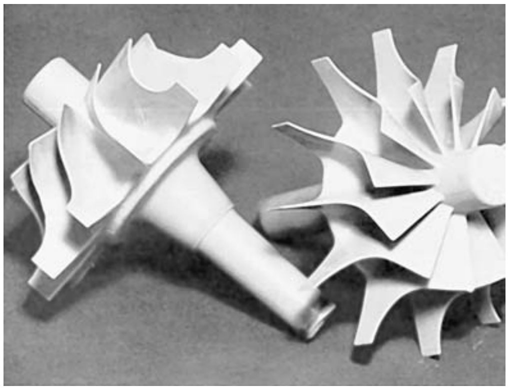

FIGURE 8-8 Gas-turbine rotors made of silicon nitride. The lightweight material (one-half the weight of stainless steel) offers strength at elevated temperature as well as excellent resistance to corrosion and thermal shock. *(Courtesy of Wesgo Division, GTE, Hayward, CA.)*

resistant parts (including bearings, seals, valves, and dies), cutting tools, punches, dies, and engine components, as well as use in heat exchangers, gas turbines, and furnaces. Porous products have been used as substrate material for catalytic converters and as filters for streams of molten metal. Biocompatible ceramics have been used as substitutes for joints and bones and as dental implants.

Alumina (or aluminum oxide) ceramics are the most common for industrial applications. They are relatively inexpensive and offer high hardness and abrasion resistance, low density, and high electrical resistivity. Alumina is strong in compression and retains useful properties at temperatures as high as 1900ºC (3500ºF), but it is limited by low toughness, low tensile strength, and susceptibility to thermal shock and attack by highly corrosive media. Due to its high melting point, it is generally processed in a powder form.

Silicon carbide and silicon nitride offer excellent strength and wear resistance with moderate toughness. They work well in high-stress, high-temperature applications, such as turbine blades, and may well replace nickel- or cobalt-based superalloys. Figure 8-8 shows gas-turbine rotors made from injection-molded silicon nitride. They are designed to operate at 1250ºC (2300ºF), where the material retains over half of its room-temperature strength and does not require external cooling. Figure 8-9 shows some additional silicon nitride products.

FIGURE 8-9 A variety of components manufactured from silicon nitride, including an exhaust valve and turbine blade. *(Courtesy of Wesgo Division, GTE, Hayward, CA.)*

Sialon (a *si*licon–*al*uminum–*o*xygen–*n*itrogen structural ceramic) is really a solid solution of alumina and silicon nitride, and it bridges the gap between them. More aluminum oxide enhances hardness, while more silicon nitride improves toughness. The resulting material is stronger than steel, extremely hard, and as light as aluminum. It has good resistance to corrosion, wear, and thermal shock; is an electrical insulator; and retains good tensile and compressive strength up to 1400ºC (2550ºF). It has excellent dimensional stability, with a coefficient of thermal expansion that is only one-third that of steel and one-tenth that of plastic. When overloaded, however, it exhibits the ceramic property of failure by brittle fracture.

Zirconia is inert to most metals and retains strength to temperatures well over 2200ºC (4000ºF). Partially stabilized zirconia combines the zirconia characteristics of resistance to thermal shock, wear, and corrosion; low thermal conductivity; and low friction coefficient with the enhanced strength and toughness brought about by doping the material with oxides of calcium, yttrium, or magnesium. Transformation-toughened zirconia has even greater toughness as a result of dispersed second phases throughout the ceramic matrix. When a crack approaches the metastable phase, it transforms to a more stable structure, increasing in volume to compress and stop the crack.

The high cost of the structural ceramics continues to be a barrier to their widespread acceptance. High-grade ceramics are currently several times more expensive than their metal counterparts. Even factoring in enhanced lifetime and improved performance, there is still a need to reduce cost. Work continues, however, toward the development of a low-cost, high-strength, high-toughness ceramic with a useful temperature range. Parallel efforts are under way to ensure flaw detection in the range of 10 to 50 mm. If these efforts are successful, ceramics could compete where tool steels,

TABLE 8-6 Properties of Some Structural Ceramics

Material	Density (g/cm^3)	Tensile Strength (ksi)	Compressive Strength (ksi)	Modulus of Elasticity (10^6 psi)	Fracture Toughness (ksi $\sqrt{\text{in.}}$)
Al_2O_3	3.98	30	400	56	5
Sialon	3.25	60	500	45	9
SiC	3.1	25	560	60	4
ZrO_2 (partially stabilized)	5.8	65	270	30	10
ZrO_2 (transformation toughened)	5.8	50	250	29	11
Si_3N_4 (hot pressed)	3.2	80	500	45	5

powdered metals, coated materials, and tungsten carbide are now being used. Potential applications include engines, turbochargers, gas turbines, bearings, pump and valve seals, and other products that operate under high-temperature, high-stress environments.

A ceramic automobile engine has been discussed for a number of years. By allowing higher operating temperatures, engine efficiency could be increased. Sliding friction would be reduced and there would be no need for cooling. The radiator, water pump, coolant, fan belt, and water lines could all be eliminated. The net result would be up to a 30% reduction in fuel consumption. Unfortunately, this is still a dream because of the inability to produce large, complex-shaped products with few small-sized flaws.

Table 8-6 provides the mechanical properties of some of today's structural ceramics.

ADVANCED CERAMICS AS CUTTING TOOLS

Their high hardness, retention of hardness at elevated temperature, and low reactivity with metals make ceramic materials attractive for cutting applications, and cutting tools have improved significantly through advances in ceramic technology. Silicon carbide is a common abrasive in many grinding wheels. Cobalt-bonded tungsten carbide has been a popular alternative to high-speed tool steels for many tool and die applications. Many carbide tools are now enhanced by a variety of vapor-deposited ceramic coatings. Thin layers of titanium carbide, titanium nitride, and aluminum oxide can inhibit reactions between the metal being cut and the binder phase of the carbide. This results in a significant reduction in friction and wear that enables faster rates of cutting. Silicon nitride, boron carbide, cubic boron nitride, and polycrystalline diamond cutting tools now offer even greater tool life, higher cutting speeds, and reduced machine downtime. With advanced tool materials, cutting speeds can be increased from 60 to 1500 m/min (200 to 5000 ft/min). The use of these ultra-high-speed materials, however, requires companion developments in the machine tools themselves. High-speed spindles must be perfectly balanced, and workholding devices must withstand high centrifugal forces. Chip-removal methods must be able to remove the chips as fast as they are formed.

As environmental regulations become more stringent, dry machining may be pursued as a means of reducing or eliminating coolant- and lubricant-disposal problems. Ceramic materials are currently the best materials for dry operations. Ceramic tools have also been used in the direct machining of materials that once required grinding, a process sometimes called *hard machining*. Figure 8-10 shows the combination of toughness and hardness for a variety of cutting-tool materials.

8.5 COMPOSITE MATERIALS

A *composite material* is a nonuniform solid consisting of two or more different materials that are mechanically or metallurgically bonded together. Each of the various components retains its identity in the composite and maintains its characteristic structure and properties. There are recognizable interfaces between the materials. The composite material, however, generally possesses characteristic properties (or combinations of

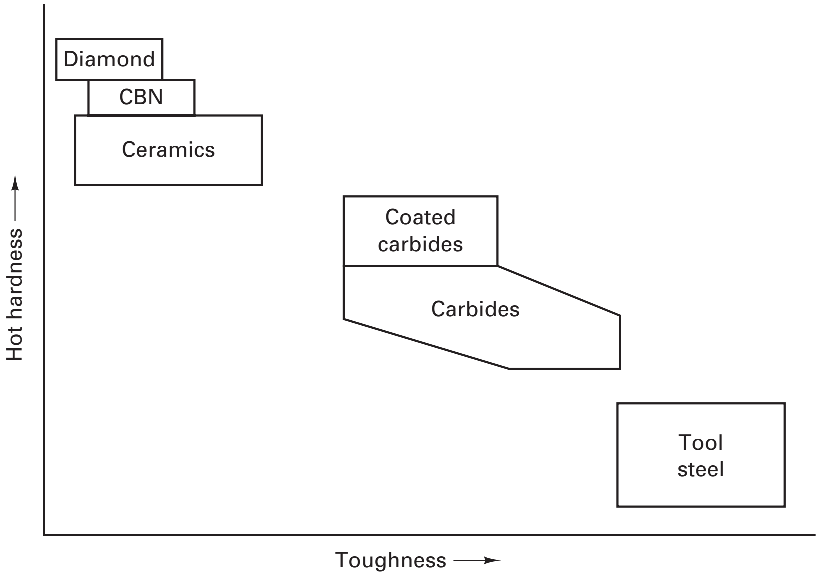

FIGURE 8-10 Graphical mapping of the combined toughness and hardness for a variety of cutting-tool materials. Note the superior hardness of the ceramic materials.

properties), such as stiffness, strength, weight, high-temperature performance, corrosion resistance, hardness, and conductivity, which are not possible with the individual components by themselves. Analysis of these properties shows that they depend on (1) the properties of the individual components; (2) the relative amounts of the components; (3) the size, shape, and distribution of the discontinuous components; (4) the orientation of the various components; and (5) the degree of bonding between the components. The materials involved can be organics, metals, or ceramics. Hence a wide range of freedom exists, and composite materials can often be designed to meet a desired set of engineering properties and characteristics.

There are many types of composite materials and several methods of classifying them. One method is based on geometry and consists of three distinct families: laminar or layered composites, particulate composites, and fiber-reinforced composites.

LAMINAR OR LAYERED COMPOSITES

Laminar composites have distinct layers of material bonded together in some manner and include thin coatings, thicker protective surfaces, claddings, bimetallics, laminates, sandwiches, and others. They are used to impart properties such as reduced cost, enhanced corrosion resistance or wear resistance, electrical insulation or conductivity, unique expansion characteristics, lighter weight, improved strength, or altered appearance.

Plywood is probably the most common engineering material in this category and is an example of a laminate material. Layers of wood veneer are adhesively bonded with their grain orientations at various angles to one another. Strength and fracture resistance are improved, properties are somewhat uniform within the plane of the sheet, swelling and shrinkage tendencies are minimized, and large pieces are available at reasonable cost. Safety glass is another laminate in which a layer of polymeric adhesive is placed between two pieces of glass and serves to retain the fragments when the glass is broken. *Ar*amid–*al*uminum-*l*aminates (Arall) consist of thin sheets of aluminum bonded with woven adhesive-impregnated aramid fibers. The combination offers light weight coupled with high fracture, impact, and fatigue resistance.

Laminated plastics are made from layers of reinforcing material that have been impregnated with thermosetting resins, bonded together, and cured under heat and pressure. They can be produced as sheets, or rolled around a mandrel to produce a tube, or rolled tightly to form a rod. Various resins have been used with reinforcements of paper, cotton or nylon fabric, asbestos, or glass fiber (usually in woven form). Common applications include a variety of decorative items, such as Formica countertops, imitation hardwood flooring, and furniture. When combined with a metal layer on one or both surfaces, the material is used for printed circuit boards.

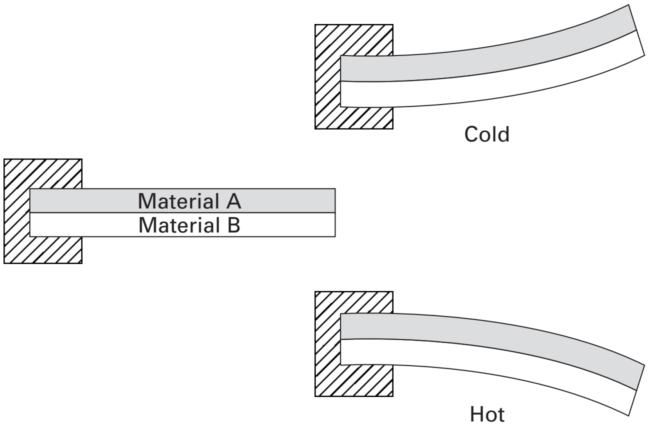

FIGURE 8-11 Schematic of a bimetallic strip where material A has the greater coefficient of thermal expansion. Note the response to cold and hot temperatures.

Bimetallic strip is a laminate of two metals with significantly different coefficients of thermal expansion. As Figure 8-11 illustrates, changes in temperature now produce flexing or curvature in the product. The unique property of shape varying with temperature is often employed in thermostat and other heat-sensing applications. Still other laminar composites are designed to provide enhanced surface characteristics while retaining a low-cost, high-strength, or lightweight core. Many clad materials fit this description. Alclad metal, for example, consists of high strength, age-hardenable aluminum with an exterior cladding of one of the more corrosion-resistant, single-phase, non-heat-treatable aluminum alloys. Stainless steel has been applied to cheaper, less corrosion-resistant, substrates. U.S. coinage is a laminate, designed to conserve the more costly, high-nickel-content material while providing a lustrous, corrosion-resistant surface. Other laminates have surface layers that have been selected primarily for enhanced wear resistance, improved appearance, or electrical conductivity.

Sandwich material is a laminar structure composed of a thick, low-density core placed between thin, high-density surfaces. Corrugated cardboard is an example of a sandwich structure. Other engineering sandwiches incorporate cores of a polymer foam or honeycomb structure to produce a lightweight, high-strength, high-rigidity composite.

It should be noted that the properties of laminar composites are always anisotropic—that is, they are not the same in all directions. Because of the variation in structure, properties will always be different in the direction perpendicular to the layers.

PARTICULATE COMPOSITES

Particulate composites consist of discrete particles of one material surrounded by a matrix of another material. Concrete is a classic example, consisting of sand and gravel particles surrounded by hydrated cement. Asphalt consists of similar aggregate in a matrix of bitumin, a thermoplastic polymer. In both of these examples, the particles are rather coarse. Other particulate composites involve extremely fine particles and include many of the multicomponent powder metallurgy products, specifically those where the dispersed particles do not diffuse into the matrix material.

Dispersion-strengthened materials are particulate composites where a small amount of hard, brittle, small-sized particles (typically, oxides or carbides) are dispersed throughout a softer, more ductile metal matrix. Since the dispersed material is not soluble in the matrix, it does not redissolve, overage, or overtemper when the material is heated. Pronounced strengthening can be induced, which decreases only gradually as temperature is increased. Creep resistance, therefore, is improved significantly. Examples of dispersion-strengthened materials include sintered aluminum powder (SAP), which consists of an aluminum matrix strengthened by up to 14% aluminum oxide, and thoria-dispersed (or TD) nickel, a nickel alloy containing 1 to 2 wt% thoria (ThO_2). Because of the metal–ceramic mix and the desire to distribute materials of differing density, the dispersion-strengthened composites are generally produced by powder metallurgy techniques.

Other types of particulate composites, known as *true particulate composites*, contain large amounts of coarse particles. They are usually designed to produce some desired combination of properties rather than increased strength. Cemented carbides, for example, consist of hard ceramic particles, such as tungsten carbide, tantalum carbide, or titanium carbide, embedded in a metal matrix, which is usually cobalt. Although the hard, stiff carbide could withstand the high temperatures and pressure of cutting, it is extremely brittle. Toughness is imparted by combining the carbide particles with cobalt powder, pressing the material into the desired shape, heating to melt the cobalt, and then resolidifying the compacted material. Varying levels of toughness can be imparted by varying the amount of cobalt in the composite.

Grinding and cutting wheels are often formed by bonding abrasives, such as alumina (Al_2O_3), silicon carbide (SiC), cubic boron nitride (CBN), or diamond, in a matrix of glass or polymeric material. As the hard particles wear, they fracture or pull out of the matrix, exposing fresh, new cutting edges. By combining tungsten powder and powdered silver or copper, electrical contacts can be produced that offer both high conductivity and resistance to wear and arc erosion. Foundry molds and cores are often made from sand (particles) and an organic or inorganic binder (matrix).

Metal–matrix composites of the particulate type have been made by introducing a variety of ceramic or glass particles into aluminum or magnesium matrices. Particulate-toughened ceramics using zirconia and alumina matrices are being used as bearings, bushings, valve seats, die inserts, and cutting-tool inserts. Many plastics could be considered to be particulate composites because the additive fillers and extenders are actually dispersed particles. Designation as a particulate composite, however, is usually reserved for polymers where the particles are added for the primary purpose of property modification. One such example is the combination of granite particles in an epoxy matrix that is currently being used in some machine tool bases. This unique material offers high strength and a vibration-damping capacity that exceeds that of gray cast iron.

Because of their unique geometry, the properties of particulate composites are usually *isotropic*, that is, uniform in all directions. This may be particularly important in engineering applications.

FIBER-REINFORCED COMPOSITES

The most popular type of composite material is the *fiber-reinforced composite* geometry, where continuous or discontinuous thin fibers of one material are embedded in a matrix of another. The objective is usually to enhance strength, stiffness, fatigue resistance, or strength-to-weight ratio by incorporating strong, stiff, but possibly brittle, fibers in a softer, more ductile matrix. The matrix supports and transmits forces to the fibers, protects them from environments and handling, and provides ductility and toughness, while the fibers carry most of the load and impart enhanced stiffness. Wood and bamboo are two naturally occurring fiber composites, consisting of cellulose fibers in a lignin matrix. Bricks of straw and mud may well have been the first human-made material of this variety, dating back to near 800 B.C. Automobile tires now use fibers of nylon, rayon, aramid (Kevlar), or steel in various numbers and orientations to reinforce the rubber and provide added strength and durability. Steel-reinforced concrete is actually a double composite, consisting of a particulate matrix reinforced with steel fibers.

Glass-fiber-reinforced resins, the first of the modern fibrous composites, were developed shortly after World War II in an attempt to produce lightweight materials with high strength and high stiffness. Glass fibers about 10 μm in diameter are bonded in a variety of polymers, generally epoxy or polyester resins. Between 30 and 60% by volume is made up of fibers of either E-type borosilicate glass (tensile strength of 500 ksi and elastic modulus of 10.5×10^6 psi) or the stronger, stiffer, high-performance S-type magnesia–alumina–silicate glass (with tensile strength of 670 ksi and elastic modulus of 12.4×10^6 psi).[4]

---

[4] It is important to note that a fiber of material tends to be stronger than the same material in bulk form. The size of any flaw is limited to the diameter of the fiber, and the complete failure of a given fiber does not propagate through the assembly, as would occur in an identical bulk material.

Glass fibers are still the most widely used reinforcement, primarily because of their lower cost and adequate properties for many applications. Current uses of glass-fiber-reinforced plastics include sporting goods, boat hulls, and bathtubs. Limitations of the glass-fiber material are generally related to strength and stiffness. Alternative fibers have been developed for applications requiring enhanced properties. Boron–tungsten fibers (boron deposited on a tungsten core) offer an elastic modulus of 55×10^6 psi with tensile strengths in excess of 400 ksi. Silicon carbide filaments (SiC on tungsten) have an even higher modulus of elasticity.

Graphite (or carbon) and aramid (DuPont tradename of Kevlar) are other popular reinforcing fibers. Graphite fibers can be either the PAN type, produced by the thermal pyrolysis of synthetic organic fibers, primarily polyacrylonitrile, or pitch type, made from petroleum pitch. They have low density and a range of high tensile strengths (600 to 750 ksi) and high elastic moduli (40 to 65×10^6 psi). Graphite's negative thermal-expansion coefficient can also be used to offset the positive values of most matrix materials, leading to composites with low or zero thermal expansion. Kevlar is an organic aramid fiber with a tensile strength up to 650 ksi, elastic modulus of 27×10^6 psi, a density approximately one-half that of aluminum, and good toughness. In addition, it is flame retardant and transparent to radio signals, making it attractive for a number of military and aerospace applications where the service temperature is not excessive.

Ceramic fibers, metal wires, and specially grown whiskers have also been used as reinforcing fibers for high-strength, high-temperature applications. Metal fibers can also be used to provide electrical conductivity or shielding from electromagnetic interference to a lightweight polymeric matrix. With the demand for less expensive, environmentally friendly materials, the natural fibers have also assumed an engineering material role. Cotton, hemp, flax, jute, coir (coconut husk), and sisal have found use in various composites. Thermoplastic fibers, such as nylon and polyester, have been used to enhance the toughness and impact strength of the brittle thermoset resins.

Table 8-7 lists some of the key engineering properties for several of the common reinforcing fibers. Since the objectives are often high strength coupled with light weight, or high stiffness coupled with light weight, properties are often reported as *specific strength* and *specific stiffness*, where the strength or stiffness values are divided by density.

The orientation of the fibers within the composite is often key to properties and performance. Sheet–molding compound, bulk-molding compound, and fiberglass generally contain short, randomly oriented fibers. Long, unidirectional fibers can be used to produce highly directional properties, with the fiber directions being tailored to the direction of loading. Woven fabrics or tapes can be produced and then layered in various orientations to produce a plywood-like product. The layered materials can then be stitched together to add a third dimension to the weave, and complex three-dimensional shapes can be woven from fibers and later injected with a matrix material.

The properties of fiber-reinforced composites depend strongly on several characteristics: (1) the properties of the fiber material; (2) the volume fraction of fibers; (3) the *aspect ratio* of the fibers, that is, the length-to-diameter ratio; (4) the orientation of the fibers; (5) the degree of bonding between the fiber and the matrix; and (6) the properties of the matrix. While more fibers tend to provide greater strength and stiffness, the volume fraction of fibers generally cannot exceed 80% to allow for a continuous matrix. Long, thin fibers (higher aspect ratio) provide greater strength, and a strong bond is usually desired between the fiber and matrix.

TABLE 8-7 Properties and Characteristics of Some Common Reinforcing Fibers

Fiber Material	Specific Strength[a] (10^6 in.)	Specific Stiffness[b] (10^6 in.)	Density (lb/in.^{3})	Melting Temperature[c] (°F)
Al_2O_3 whiskers	21.0	434	0.142	3600
Boron	4.7	647	0.085	3690
Ceramic fiber (mullite)	1.1	200	0.110	5430
E-type glass	5.6	114	0.092	<3140
High-strength graphite	7.4	742	0.054	6690
High-modulus graphite	5.0	1430	0.054	6690
Kevlar	10.1	347	0.052	—
SiC whiskers	26.2	608	0.114	4890

[a] Strength divided by density.
[b] Elastic modulus divided by density.
[c] Or maximum temperature of use.

The matrix materials should be strong, tough, and ductile so that they can transmit the loads to the fibers and prevent cracks from propagating through the composite. In addition, the matrix material is often responsible for providing the electrical properties, chemical behavior, and elevated-temperature stability. For polymer-matrix composites, both thermosetting and thermoplastic resins have been used. The thermosets provide high strength and high stiffness, and the low-viscosity, uncured resins readily impregnate the fibers. Popular thermosets include epoxies, polyesters, bismaleimides, and polyimides. From a manufacturing viewpoint, it may be easier and faster to heat and cool a thermoplastic than to cure a thermoset. Moreover, the thermoplastics are tougher and more tolerant to damage. Polyethylene, polystyrene, and nylon are traditional thermoplastic matrix materials. Improved high-temperature and chemical-resistant properties can be achieved with the thermoplastic polyimides, polyphenylene sulfide (PPS), polyether ether ketone (PEEK), and the liquid-crystal polymers. When reinforced with high-strength, high-modulus fibers, these materials can show dramatic improvements in strength, stiffness, toughness, and dimensional stability.

ADVANCED FIBER-REINFORCED COMPOSITES

Advanced composites are materials that have been developed for applications requiring exceptional combinations of strength, stiffness, and light weight. Fiber content generally exceeds 50% (by weight), and the modulus of elasticity is typically greater than 16×10^6 psi. Superior creep and fatigue resistance, low thermal expansion, low friction and wear, vibration-damping characteristics, and environmental stability are other properties that may also be required in these materials.

There are four basic types of advanced composites where the matrix material is matched to the fiber and the conditions of application:

1. The advanced *organic or resin-matrix composites* frequently use high-strength, high-modulus fibers of graphite, aramid (Kevlar), or boron. Properties can be put in desired locations or orientations at about one-half the weight of aluminum (or one-sixth that of steel). Thermal expansion can be designed to be low or even negative. Unfortunately, these materials have a maximum service temperature of about 315°C (600°F) because the polymer matrix loses strength when heated. Table 8-8 compares the properties of some of the common resin-matrix composites with those of several of the lightweight or low-thermal-expansion metals. Typical applications include sporting equipment (tennis rackets, skis, golf clubs, and fishing poles), lightweight armor plate, and a myriad of low-temperature aerospace components.

TABLE 8-8 Properties of Several Fiber-Reinforced Composites (in the Fiber Direction) Compared to Lightweight or Low-Thermal-Expansion Metals

Material	Specific Strength[a] (10^6 in.)	Specific Stiffness[b] (10^6 in.)	Density (lb/in.^{3})	Thermal Expansion Coefficient [in./(in.-°F)]	Thermal Conductivity [Btu/(hr-ft-°F)]
Boron–epoxy	3.3	457	0.07	2.2	1.1
Glass–epoxy (woven cloth)	0.7	45	0.065	6	0.1
Graphite–epoxy: high modulus (unidirectional)	2.1	700	0.063	−0.5	75
Graphite–epoxy: high strength (unidirectional)	5.4	400	0.056	−0.3	3
Kevlar–epoxy (woven cloth)	1	80	0.5	1	0.5
Aluminum	0.7	100	0.10	13	100
Beryllium	1.1	700	0.07	7.5	120
Invar[c]	0.2	70	0.29	1	6
Titanium	0.8	100	0.16	5	4

[a] Strength divided by density.

[b] Elastic modulus divided by density.

[c] A low-expansion metal containing 36% Ni and 64% Fe.

2. *Metal-matrix composites* (MMCs) can be used for operating temperatures up to 1250ºC (2300ºF), where the conditions require high strength, high stiffness, good electrical and/or thermal conductivity, exceptional wear resistance, and good ductility and toughness. The ductile matrix material can be aluminum, copper, magnesium, titanium, nickel, superalloy, or even intermetallic compound, and the reinforcing fibers may be graphite, boron carbide, alumina, or silicon carbide. Fine whiskers (tiny needlelike single crystals of 1 to 10 μm in diameter) of sapphire, silicon carbide, and silicon nitride have also been used as the reinforcement, as well as wires of titanium, tungsten, molybdenum, beryllium, and stainless steel. The reinforcing fibers may be either continuous or discontinuous and typically comprise between 10 and 60% of the composite by volume.Compared to the engineering metals, these composites offer higher stiffness and strength (especially at elevated temperatures); a lower coefficient of thermal expansion; better elevated-temperature properties; and enhanced resistance to fatigue, abrasion, and wear. Compared to the organic matrix composites, they offer higher heat resistance as well as improved electrical and thermal conductivity. They are nonflammable, do not absorb water or gases, and are corrosion resistant to fuels and solvents. Unfortunately, these materials are quite expensive. The vastly different thermal expansions of the components may lead to debonding, and the assemblies may be prone to degradation through interdiffusion or galvanic corrosion. Graphite-reinforced aluminum can be designed to have near-zero thermal expansion in the fiber direction. Aluminum-oxide-reinforced aluminum has been used in automotive connecting rods to provide stiffness and fatigue resistance with lighter weight. Aluminum reinforced with silicon carbide has been fabricated into automotive drive shafts, cylinder liners, and brake drums as well as aircraft wing panels, all offering significant weight savings. Fiber-reinforced superalloys may well become a preferred material for applications such as turbine blades.

3. *Carbon–carbon composites* (graphite fibers in a graphite or carbon matrix) offer the possibility of a heat-resistant material that could operate at temperatures above 2000ºC (3600ºF), along with a strength that is 20 times that of conventional graphite, a density that is 30% lighter (1.38 g/cm^3), and a low coefficient of thermal expansion. Not only does this material withstand high temperatures, it actually gets stronger when heated. Companion properties include good toughness, good thermal and electrical conductivity, and resistance to corrosion and abrasion. For temperatures over 540ºC (1000ºF), however, the composite requires some form of coating to protect it from oxidizing. Various coatings can be used for different temperature ranges. Current applications include the nose cone and leading edge of the space shuttle, aircraft and racing car disc brakes, automotive clutches, aerospace turbines and jet engine components, rocket nozzles, and surgical implants.

4. *Ceramic-matrix composites* (CMCs) offer light weight, high-temperature strength and stiffness, and good dimensional and environmental stability. The matrix provides high temperature resistance. Glass matrices can operate at temperatures as high as 1500ºC (2700ºF). The crystalline ceramics, usually based on alumina, silicon carbide, silicon nitride, boron nitride, titanium diboride, or zirconia, can be used at even higher temperatures. The fibers add directional strength, increase fracture toughness, improve thermal shock resistance, and can be incorporated in unwoven, woven, knitted, and braided form. Typical reinforcements include carbon fiber, glass fiber, fibers of the various matrix materials, and ceramic whiskers. Composites with discontinuous fibers tend to be used primarily for wear applications, such as cutting tools, forming dies, and automotive parts such as valve guides. Other applications include lightweight armor plate and radomes. Continuous-fiber ceramic composites are used for applications involving the combination of high temperatures and high stresses, and have been shown to fail in a noncatastrophic manner. Application examples include gas-turbine components, high-pressure heat exchangers, and high-temperature filters. Unfortunately, the cost of ceramic–ceramic composites ranges from high to extremely high, so applications are restricted to those where the benefits are quite attractive.

HYBRID COMPOSITES

Hybrid composites involve two or more different types of fibers in a common matrix. The particular combination of fibers is usually selected to balance strength and stiffness, provide dimensional stability, reduce cost, reduce weight, or improve fatigue and fracture resistance. Types of hybrid composites include (1) interply (alternating layers of fibers), (2) intraply (mixed strands in the same layer), (3) interply–intraply, (4) selected placement (where the more costly material is used only where needed), and (5) interply knitting (where plies of one fiber are stitched together with fibers of another type).

DESIGN AND FABRICATION

The design of composite materials involves the selection of the component materials; the determination of the relative amounts of each component; the determination of size, shape, distribution, and orientation of the components; and the selection of an appropriate fabrication method. Many of the possible fabrication methods have been specifically developed for use with composite materials. For example, fibrous composites can be manufactured into useful shapes through compression molding, filament winding, pultrusion (where bundles of coated fibers are drawn through a heated die), cloth lamination, and autoclave curing (where pressure and elevated temperature are applied simultaneously). A variety of fiber-containing thermoset resins premixed with fillers and additives (*bulk-molding compounds*) can be shaped and cured by compression, transfer, and injection molding to produce three-dimensional fiber-reinforced products for numerous applications. Sheets of glass-fiber-reinforced thermoset resin, again with fillers and additives (*sheet-molding compound*), can be press formed to provide lightweight, corrosion-resistant products that are similar to those made from sheet metal. The reinforcing fibers can be short and random, directionally oriented, or fully continuous in a specified direction. With a wide spectrum of materials, geometries, and processes, it is now possible to tailor a composite material product for a specific application. As one example, consider the cargo beds for pickup trucks, where composite products offer reduced weight coupled with resistance to dents, scratches, and corrosion.

A significant portion of Chapter 15 is devoted to a more complete description of the fabrication methods that have been developed for composite materials.

ASSETS AND LIMITATIONS

Figure 8-12 graphically presents the strength-to-weight ratios of various aerospace materials as a function of temperature. The superiority of the various advanced composites over the conventional aerospace metals is clearly evident. The weight of a graphite–epoxy composite I-beam is less than one-fifth that of steel, one-third that of titanium, and one-half that of aluminum. Its ultimate tensile strength equals or exceeds that of the other three materials, and it possesses an almost infinite fatigue life. The greatest limitations of this and other composites are their relative brittleness and the high cost of both materials and fabrication.

While there has been considerable advancement in the field, manufacturing with composites can still be quite labor intensive, and there is a persistent lack of trained designers, established design guidelines and data, information about fabrication costs, and reliable methods of quality control and inspection. It is often difficult to predict the interfacial bond strength, the strength of the composite and its response to impacts, and the probable modes of failure. Defects can involve delaminations, voids, missing layers, contamination, fiber breakage, and (hard-to-detect) improperly cured resin. There is often concern about heat resistance. Many composites with polymeric matrices are sensitive to moisture, acids, chlorides, organic solvents, oils, and ultraviolet radiation, and they tend to cure forever, causing continually changing properties. In addition, most composites have limited ability to be repaired if damaged, preventive maintenance procedures are not well established, and recycling is often extremely difficult. Assembly operations with composites generally require the use of industrial adhesives.

On the positive side, the availability of a corrosion-resistant material with strength and stiffness greater than those of steel at only one-fifth the weight may be sufficient to justify some engineering compromises. Reinforcement fibers can be oriented in

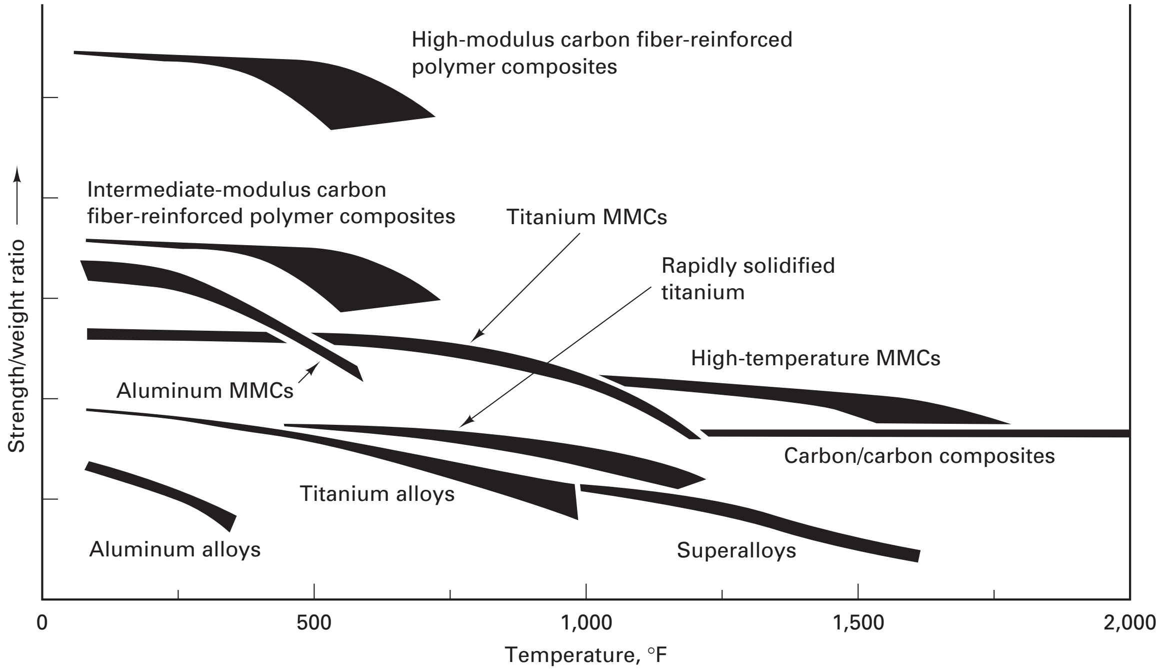

FIGURE 8-12 The strength-to-weight ratio of various aerospace materials as a function of temperature. Note the superiority of the various fiber-reinforced composites. *(Adapted with permission of DuPont Company, Wilmington, DE.)*

the direction of maximum stiffness and strength. In addition, products can often be designed to significantly reduce the number of parts, number of fasteners, assembly time, and cost.

AREAS OF APPLICATION

Many composite materials are stronger than steel, lighter than aluminum, and stiffer than titanium. They can also possess low thermal conductivity, good heat resistance, good fatigue life, low corrosion rates, and adequate wear resistance. For these reasons they have become well established in several areas.

Aerospace applications frequently require light weight, high strength, stiffness, and fatigue resistance. As a result, composites may well account for a considerable fraction of the weight of a current airplane design. Figure 8-13 shows a schematic of the F-22 Raptor fighter airplane. Traditional materials, such as aluminum and steel, make up only about 20% of the F-22 structure by weight. Its higher speed, longer range, greater agility, and reduced detectability are made possible through the use of 42% titanium and 24% composite material. Boeing's new 787, a 200-seat intercontinental commercial airliner, will have a majority of its primary structure, including wings and fuselage, made of polymer-matrix (carbon–epoxy) composites. A titanium–graphite composite will also be used in the wings of this aircraft, which will use 15 to 20% less fuel than current wide-body planes. The Airbus Industries' new A380 wide-body plane will also utilize a high proportion of composite materials (about 16% by weight) and will mark the introduction of a new composite material, known as glass-reinforced aluminum, a laminate composite of alternating layers of aluminum and glass prepreg. The new material, which enables a 25% reduction in the weight of fuselage skin, is more fatigue resistant than aluminum and less expensive than a full composite.

Sports are highly competitive, and fractions of a second or tenths of a millimeter often decide victories. As a result, both professionals and amateurs are willing to invest in athletic equipment that will improve performance. The materials of choice have evolved from naturally occurring wood, twine, gut, and rubber to a wide variety of high-technology metals, polymers, ceramics, and composites. Golf club shafts, baseball bats, fishing

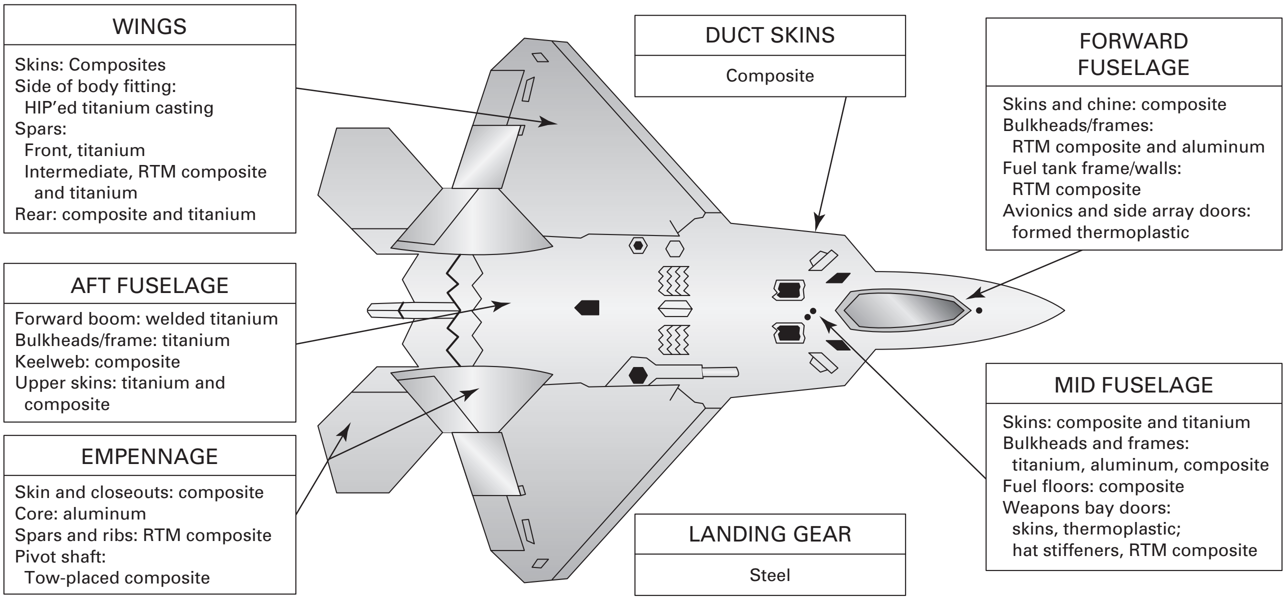

FIGURE 8-13 Schematic diagram showing the materials used in the various sections of the F-22 Raptor fighter airplane. Traditional materials, such as aluminum and steel, comprise only 20% by weight. Titanium accounts for 42%, and 24% is composite material. The plane is capable of flying at Mach 2. (*Note:* RTM is resin-transfer molding.) *(Reprinted with permission of ASM International, Metals Park, OH.)*

rods, archery bows, tennis rackets, bicycle frames, skis, and snowboards are now available in a wide variety of fibrous composites. Figure 8-14 shows several of these applications.

In addition to body panels, automotive uses of composite materials include drive shafts, springs, and bumpers. Weight savings compared to existing parts is generally 20 to 25%. Truck manufacturers now use fiber-reinforced composites for cab shells and bodies, oil pans, fan shrouds, instrument panels, and engine covers.

Other applications include such diverse products as boat hulls, bathroom shower and tub structures, chairs, architectural panels, agricultural tanks and containers, pipes and vessels for the chemical industry, and external housings for a variety of consumer and industrial products.

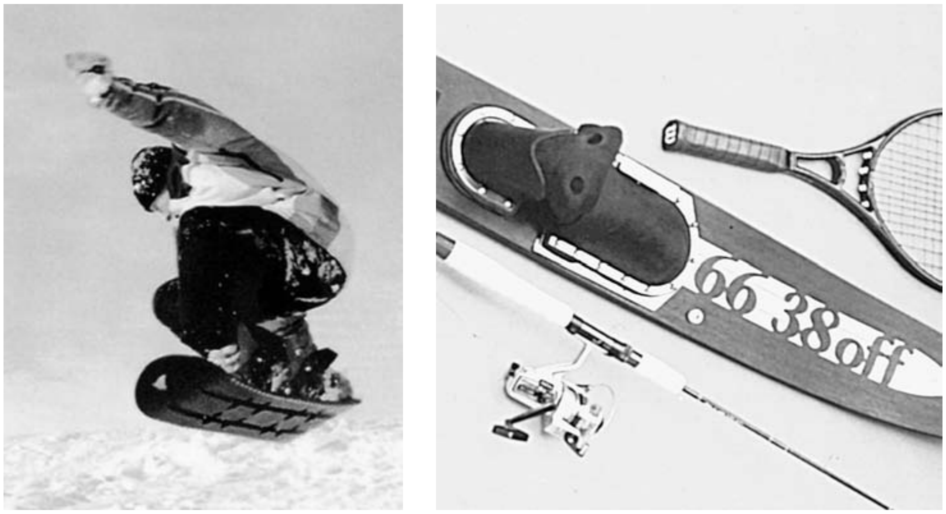

FIGURE 8-14 Composite materials are often used in sporting goods to improve performance through light weight, high stiffness, and high strength, and also to provide attractive styling. (Left) A composite material snowboard; (right) composites being used in a fishing rod, water ski, and tennis racquet.

Key Words

abrasive
addition polymerization
additive agents
advanced ceramic
advanced composite
amorphous
anisotropic
aspect ratio
bulk-molding compound
carbon–carbon composite
ceramic
ceramic–matrix composite
cermet
clay
composite
condensation polymerization
copolymer
cross-linking
crystallized polymer
degree of polymerization
dispersion-strengthened material
elastomer
fiber-reinforced composite
fillers
foamed plastic
glass
hybrid composite
isomer
isotropic
laminar composite
mer
metal–matrix composite
nonmetallic materials
oriented plastics
particulate composite
plastic
plasticizer
polymer
refractory material
rubber
saturated monomer
sheet-molding compound
specific stiffness
specific strength
stress relaxation
superabrasive
terpolymer
thermoplastic
thermosetting
unsaturated monomer
viscoelastic memory
whiteware

Review Questions

1. What are some naturally occurring nonmetallic materials that have been used for engineering applications?
2. What are some material families that would be classified under the general term *nonmetallic engineering materials*?
3. How might plastics be defined from the viewpoints of chemistry, structure, fabrication, and processing?
4. What is the primary type of atomic bonding within polymers?
5. What is the difference between a saturated and an unsaturated molecule?
6. What is an isomer?
7. Describe and differentiate the two means of forming polymers: addition polymerization and condensation polymerization.
8. What is degree of polymerization?
9. Describe and differentiate thermoplastic and thermosetting plastics.
10. Describe the mechanism by which thermoplastic polymers soften under heat and deform under pressure.
11. What does it mean when a polymer "crystallizes"?
12. What are some of the ways that a thermoplastic polymer can be made stronger?
13. What are the four most common thermoplastic polymers?
14. Why are thermosetting polymers characteristically brittle?
15. How do thermosetting polymers respond to subsequent heating?
16. Describe how thermoplastic or thermosetting characteristics affect productivity during the fabrication of a molded part.
17. What are some attractive engineering properties of polymeric materials?
18. What are some limiting properties of plastics, and in what general area do they fall?
19. What are some environmental conditions that might adversely affect the engineering properties of plastics?
20. What are some reasons that additive agents are incorporated into plastics?
21. What are some functions of a filler material in a polymer?
22. What are some of the more common filler materials used in plastics?
23. What is the difference between a dye and a pigment?
24. What is the role of a stabilizer or antioxidant?
25. What is an oriented plastic, and what is the primary engineering benefit?
26. What are some properties and characteristics of the "engineering plastics"?
27. Describe the use of plastic materials as adhesives. In tooling applications.
28. Describe some of the applications for foamed plastics.
29. What manufacturing features can enhance the attractiveness of plastics as a product material?
30. Which type of plastic is most easily recycled?
31. Why is the recycling of mixed plastics more difficult than the recycling of mixed metals?
32. What is the unique mechanical property of elastomeric materials, and what structural feature is responsible for it?
33. How can cross-linking be used to control the engineering properties of elastomers?
34. What are some of the materials that can be added to natural rubber, and for what purpose?
35. What are some of the attractive features of the silicone rubbers?
36. What is the most common use of an elastomer in a tooling application?
37. What are some outstanding physical properties of ceramic materials?
38. Why are the crystal structures of ceramics frequently more complex than those observed for metals?
39. What is the common name given for ceramic material in the noncrystalline, or amorphous, state?
40. What are some of the ways that toughness can be imparted to ceramic materials?
41. What is the dominant property of refractory ceramics?
42. What is the dominant property of ceramic abrasives?
43. How are glass products formed or shaped?
44. What are some of the specialty applications of glass?
45. What are cermets, and what properties or combination of properties do they offer?
46. Why do most ceramic materials fail to possess their theoretically high tensile strength?
47. Why do the mechanical properties of ceramics generally show a wider statistical spread than the same properties of metals?
48. If all significant flaws or defects could be eliminated from the structural ceramics, what properties might be present and what features might still limit their possible applications?
49. What are some specific materials that are classified as structural ceramics?
50. What are some attractive and limiting properties of sialon (one of the structural ceramics)?

51. What are some ceramic materials that are currently being used for cutting-tool applications, and what features or properties make them attractive?
52. What is a composite material?
53. What are the basic features of a composite material that influence and determine its properties?
54. What are the three primary geometries of composite materials?
55. What feature in a bimetallic strip makes its shape sensitive to temperature?
56. What is the attractive aspect of the strength that is induced by the particles in a dispersion-strengthened particulate composite material?
58. Which of the three primary composite geometries is most likely to possess isotropic properties?
59. What is the primary role of the matrix in a fiber-reinforced composite? Of the fibers?
60. What are some of the more popular fiber materials used in fiber-reinforced composite materials?
61. What is specific strength? Specific stiffness?
62. What are some possible fiber orientations or arrangements in a fiber-reinforced composite material?
63. What are some features that influence the properties of fiber-reinforced composites?
64. What are “advanced composites”?
65. In what ways are metal–matrix composites superior to straight engineering metals? To organic–matrix composites?
66. What features might be imparted by the fibers in a ceramic–matrix composite?
67. What are hybrid composites?
68. What is bulk-molding compound and how is it used? Sheet-molding compound?
69. What are some major limitations to the extensive use of composite materials in engineering applications?
70. What are some properties of composite materials that make them attractive for aerospace applications?

Problems

1. a. One of Leonardo da Vinci’s sketchbooks contains a crude sketch of an underwater boat (or submarine). Leonardo did not attempt to develop or refine this sketch further, possibly because he recognized that the engineering materials of his day (wood, stone, and leather) were inadequate for the task. What properties would be required for the body of a submersible vehicle? What materials might you consider?
   b. Another of Leonardo’s sketches bears a crude resemblance to a helicopter—a flying machine. What properties would be desirable in a material that would be used for this type of application?
   c. Try to identify a possible engineering product that would require a material with properties that do not exist among today’s engineering materials. For your application, what are the demanding features or requirements? If a material were to be developed for this application, from what family or group do you think it would emerge? Why?
2. Select a product (or component of a product) that can reasonably be made from materials from two or more of the basic materials families (metals, polymers, ceramics, and composites).
   a. Describe briefly the function of the product or component.
   b. What properties would be required for this product or component to perform its function?
   c. What two materials groups might provide reasonable candidates for your product?
   d. Select a candidate material from the first of your two families and describe its characteristics. In what ways does it meet your requirements? How might it fall short of the needs?
   e. Repeat part d for a candidate material from the second material family.
   f. Compare the two materials to each other. Which of the two would you prefer? Why?
3. Coatings have been applied to cutting-tool materials since the early 1970s. Desirable properties of these coatings include high-temperature stability, chemical stability, low coefficient of friction, high hardness for edge retention, and good resistance to abrasive wear. Consider the ceramic material coatings of titanium carbide (TiC), titanium nitride (TiN), and aluminum oxide (Al_2O_3), and compare them with respect to the conditions required for deposition and the performance of the resulting coatings.
4. Ceramic engines continue to constitute an area of considerable interest and are frequently discussed in the popular literature. If perfected, they would allow higher operating temperatures with a companion increase in engine efficiency. In addition, they would lower sliding friction and permit the elimination of radiators, fan belts, cooling system pumps, coolant lines, and coolant. The net result would be reduced weight and a more compact design. Estimated fuel savings could amount to 30% or more.
   a. What are the primary limitations to the successful manufacture of such a product?
   b. What types of ceramic materials would you consider to be appropriate?
   c. What methods of fabrication could produce a product of the required size and shape?
   d. What types of special material properties or special processing might be required?
5. Material recyclability has become an important requirement in many manufactured products.
   a. Consider each of the four major materials groups (metals, polymers, ceramics, and composites) and evaluate each for recyclability. What properties or characteristics tend to limit or restrict recyclability?
   b. Which materials within each group are currently being recycled in large or reasonable quantities?
   c. Europe has recently legislated extensive recycling of automobiles and electronic products. How might this legislation change the material makeup of these products?
   d. Consider a typical family automobile and discuss how the factors of (1) recyclability, (2) fuel economy, and (3) energy required to produce materials and convert them to products might favor distinctly different engineering materials.

Chapter 8 CASE STUDY

Two-Wheel Dolly Handles

The items illustrated in the figure are the handle grips for an industrial-quality, pneumatic-tire, two-wheel dolly. They are designed to be bolted onto box-channel tubular sections using four bolt-holes, which are sized to accommodate $\frac{3}{8}$-inch-diameter bolts. The major service requirements are strength, durability, fracture resistance, reasonable appearance, and possibly light weight.

Your employer is currently marketing such a dolly using handles that are made as permanent-mold aluminum castings. The firm is in the process of updating its line and is reevaluating the design and manufacture of each of its products. The dolly is part of your assignment, and you have been asked specifically to determine whether the handles should be replaced by an alternative material, such as a polymer or low-cost composite.

Investigate the properties and cost* of alternative materials, including means of fabricating the desired shape, and make your recommendation. Since the existing design was for cast metal, you might want to make minor modifications. Make sure the alternative materials possess adequate properties in the bolt-hole region, and if not, recommend some form of reinforcement.

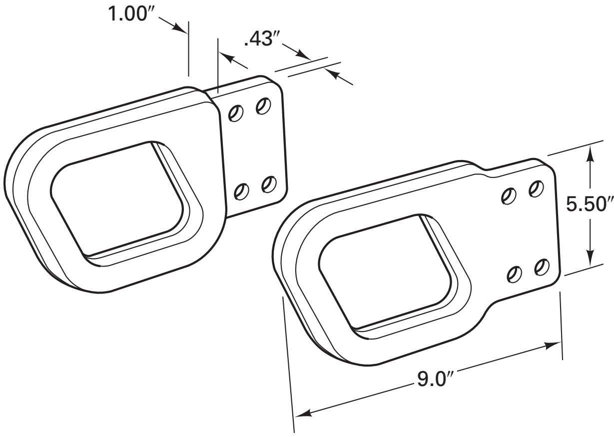

---

* Since the size of the part will remain relatively unchanged, material costs should be compared on the basis of $/in^3 or $/cm^3 and not $/lb or $/kg.

CHAPTER 9

MATERIAL SELECTION

9.1 INTRODUCTION

The objective of manufacturing operations is to make products or components that adequately perform their intended task. Meeting this objective implies the manufacture of components from selected engineering materials, with the required geometrical shape and precision and with companion material structures and properties that are optimized for the service environment. The ideal product is one that will just meet all requirements. Anything better will usually incur added cost through higher-grade materials, enhanced processing, or improved properties that may not be necessary. Anything worse will likely cause product failure, dissatisfied customers, and the possibility of unemployment.

It was not that long ago that each of the materials groups had its own well-defined uses and markets. Metals were specified when strength, toughness, and durability were the primary requirements. Ceramics were generally limited to low-value applications where heat or chemical resistance was required and any loadings were compressive. Glass was used for its optical transparency, and plastics were relegated to low-value applications where low cost and light weight were attractive features and performance properties were secondary.

Such clear delineations no longer exist. Many of the metal alloys in use today did not exist as little as 30 years ago, and the common alloys that have been in use for a century or more have been much improved due to advances in metallurgy and production processes. New on the scene are amorphous metals, dispersion-strengthened alloys produced by powder metallurgy, mechanical alloyed products, and directionally solidified materials. Ceramics, polymers, and composites are now available with specific properties that often transcend the traditional limits and boundaries. Advanced structural materials offer higher strength and stiffness; strength at elevated temperature; light weight; and resistance to corrosion, creep, and fatigue. Other materials have enhanced thermal, electrical, optical, magnetic, and chemical properties.

To the inexperienced individual, "wood is wood," but to the carpenter or craftsman, oak is best for one application, while maple excels for another, and yellow pine is preferred for a third. The ninth edition of "Woldman's Engineering Alloys"[1] includes over 56,000 metal alloys, and that doesn't consider polymers, ceramics, or composites. Even if we eliminate the obsolete and obscure, we are still left with tens of thousands of options from which to select the "right" or "best" material for the task at hand.

Unfortunately, the availability of so many alternatives has often led to poor materials selection. Money can be wasted in the unnecessary specification of an expensive alloy or one that is difficult to fabricate. At other times, these materials may be absolutely necessary, and selection of a cheaper alloy would mean certain failure. It is the responsibility of the design and manufacturing engineer, therefore, to be

---

[1] *Woldman's Engineering Alloys*, 9th edition, edited by J. Frick, ASM International, Metals Park, OH, 2000.

knowledgeable in the area of engineering materials and to be able to make the best selection among the numerous alternatives.

In addition, it is also important that the material selection process be one of constant reevaluation. New materials are continually being developed, others may no longer be available, and prices are always subject to change. Concerns regarding environmental pollution, recycling, and worker health and safety may impose new constraints. Desires for weight reduction, energy savings, or improved corrosion resistance may well motivate a change in engineering material. Pressures from domestic and foreign competition, increased demand for quality and serviceability, or negative customer feedback can all prompt a reevaluation. Finally, the proliferation of product liability actions, many of which are the result of improper material use, has further emphasized the need for constant reevaluation of the engineering materials in a product.

The automotive industry alone consumes approximately 60 million metric tons of engineering materials worldwide every year—primarily steel, cast iron, aluminum, copper, glass, lead, polymers, rubber, and zinc. In recent years, the drive toward lighter, more fuel-efficient vehicles has led to an increase in the use of the lightweight metals and high-strength steels, as well as plastics and composites.

A million metric tons of engineering materials go into aerospace applications every year. The principal materials tend to be aluminum, magnesium, titanium, superalloys, polymers, rubber, steel, metal-matrix composites, and polymer-matrix composites. Competition is intense, and materials substitutions are frequent. The use of advanced composite materials in aircraft construction has risen from less than 2% in 1970 to the point where they now account for one-quarter of the weight of the U.S. Air Force's Advanced Tactical Fighter and will soon appear in the main fuselage of commercial planes. Titanium is used extensively for applications that include the exterior skins surrounding the engines, as well as the engine frames. The cutaway section of the Rolls Royce jet engine in Figure 9-1a reveals the myriad of components—each with its own characteristic shape, precision, stresses, and operating temperatures—that require a variety of engineering materials. Figure 9-1b shows an actual engine in a manner that reveals both its size and complexity. The intake fan diameter is nearly 3 meters in diameter (9 ft, 8 in.).

The earliest two-wheeled bicycle frames were constructed of wood, with various methods and materials employed at the joints. Then, for nearly a century, the requirements of yield strength, stiffness, and acceptable weight were met by steel tubing, either low-carbon plain-carbon or thinner-walled, higher-strength chrome-moly steel tubing, with either a brazed or welded assembly.

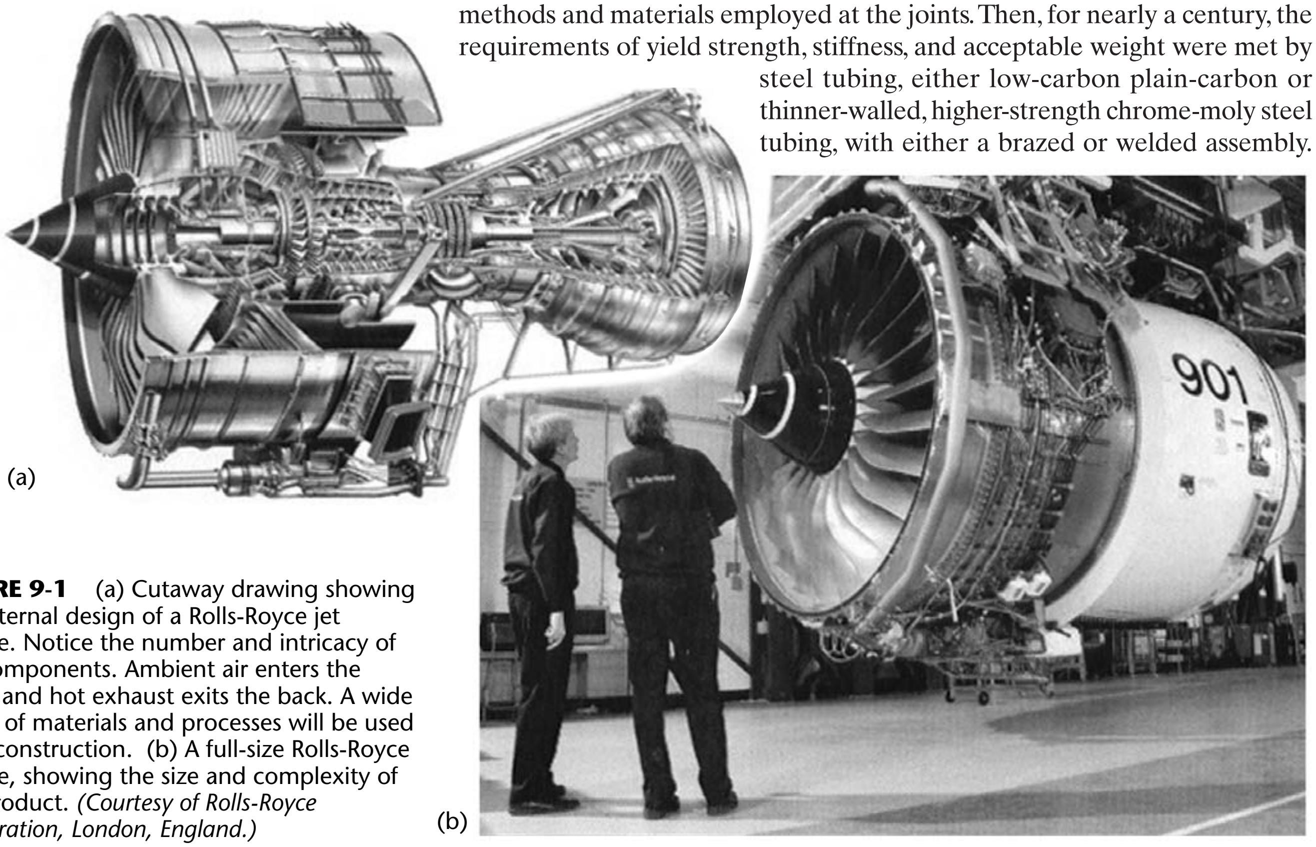

FIGURE 9-1 (a) Cutaway drawing showing the internal design of a Rolls-Royce jet engine. Notice the number and intricacy of the components. Ambient air enters the front, and hot exhaust exits the back. A wide range of materials and processes will be used in its construction. (b) A full-size Rolls-Royce engine, showing the size and complexity of the product. *(Courtesy of Rolls-Royce Corporation, London, England.)*

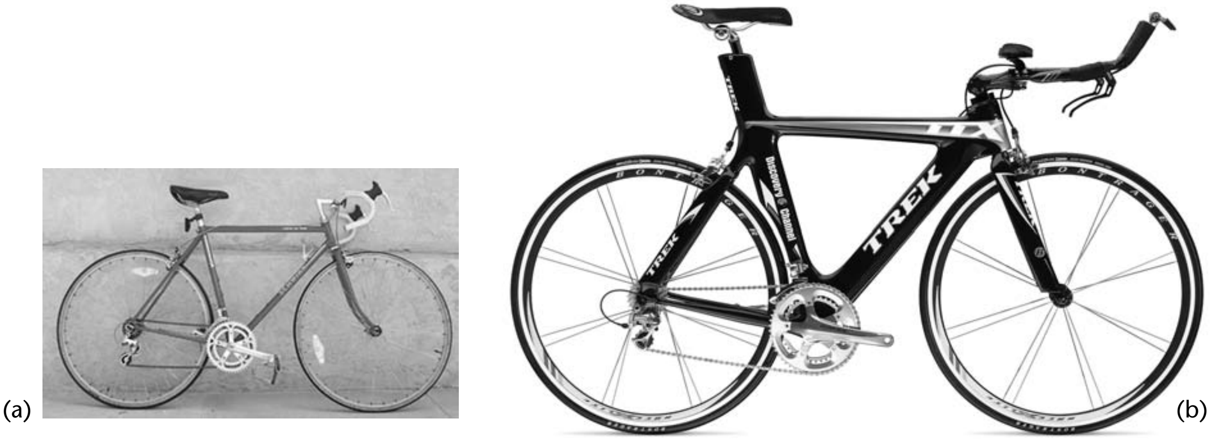

FIGURE 9-2 (a) A traditional two-wheel bicycle frame (1970s vintage) made from joined segments of metal tubing; (b) a top-of-the-line (Tour de France or triathlon-type) bicycle with one-piece frame, made from fiber-reinforced polymer–matrix composite. *(Courtesy of Trek Bicycle Corporation, Waterloo, WI.)*

In the 1970s a full circle occurred. Where a pair of bicycle builders (the Wright brothers) pioneered aerospace, the aerospace industry returned to revolutionize bicycles. Lightweight frames were constructed from the aerospace materials of high-strength aluminum, titanium, graphite-reinforced polymer, and even beryllium. Wall thickness and cross-section profiles were often modified to provide strength and rigidity. Materials paralleled function as bicycles specialized into road bikes, high-durability mountain bikes, and ultralight racing bikes. Further building on the aerospace experience, the century-old tubular frame has recently been surpassed by one-piece monocoque frames of either die-cast magnesium or continually wound carbon-fiber epoxy tapes with or without selective metal reinforcements. One top-of-the-line carbon-fiber frame now weighs only 2.5 pounds! Figure 9-2 compares a traditional tubular frame with one of the newer designs.

Window frames were once made almost exclusively from wood. While wood remains a competitive material, a trip to any building supply will reveal a selection that includes anodized aluminum in a range of colors, as well as frames made from colored vinyl and other polymers. Each has its companion advantages and limitations. Auto bodies were fabricated from steel sheet and assembled by resistance spot welding. Designers now select from steel, aluminum, and polymeric sheet-molding compounds and may use adhesive bonding to produce the joints.

The vacuum cleaner assembly shown in Figure 9-3, while not a current model, is typical of many engineering products, where a variety of materials are used for the various components. Table 9-1 lists the material changes that were recommended in just one past revision of the appliance. The materials for 12 components were changed completely, and that for a thirteenth was modified. Eleven different reasons were given for the changes. An increased emphasis on lighter weight has brought about even further changes in both design and materials.

The list of available engineering materials now includes metals and alloys, ceramics, plastics, elastomers, glasses, concrete, composite materials, and others. It is not surprising, therefore, that a single person might have difficulty making the necessary decisions concerning the materials in even a simple manufactured product. More frequently, the design engineer or design team will work in conjunction with various materials specialists to select the materials that will be needed to convert today's designs into tomorrow's reality.

■ 9.2 MATERIAL SELECTION AND MANUFACTURING PROCESSES

The interdependence between materials and their processing must also be recognized. New processes frequently accompany new materials, and their implementation can often cut production costs and improve product quality. A change in material may well require a change in the manufacturing process. Conversely, improvements in

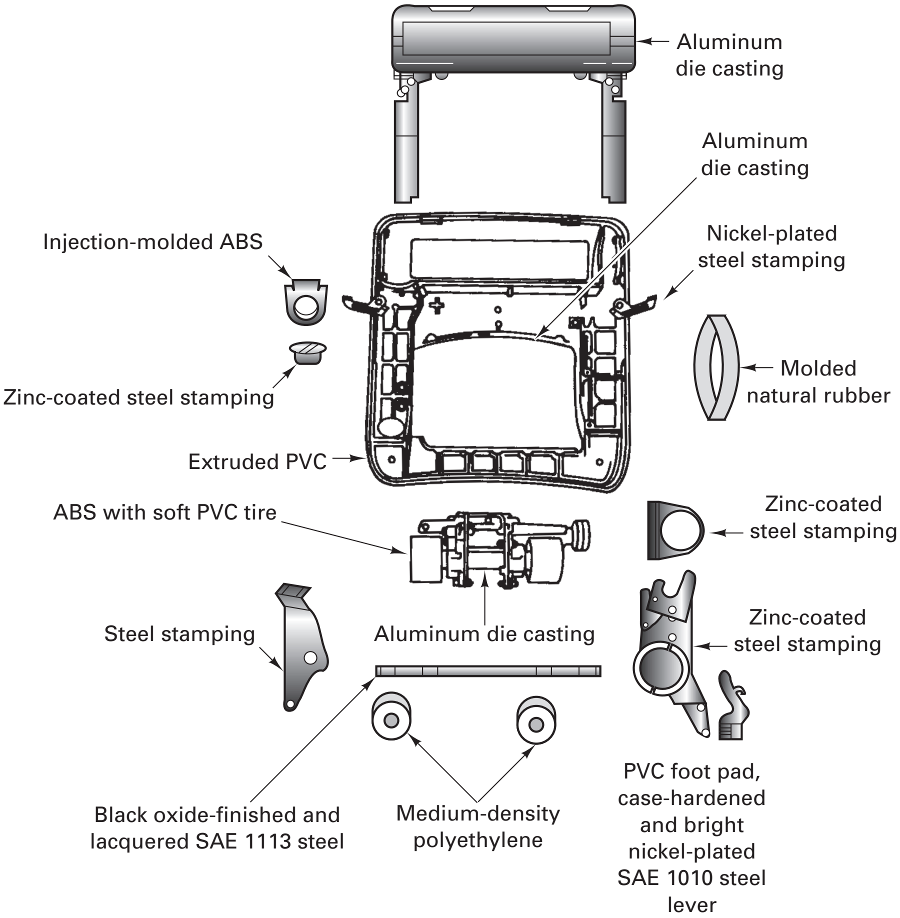

FIGURE 9-3 Materials used in various parts of a vacuum cleaner assembly. *(Courtesy of Advanced Materials and Processes, ASM International, Metals Park, OH.)*

TABLE 9-1 Examples of Material Selection and Substitution in the Redesign of a Vacuum Cleaner

Part	Former Material	New Material	Benefits
Bottom plate	Assembly of steel stampings	One-piece aluminum die casting	More convenient servicing
Wheels (carrier and caster)	Molded phenolic	Molded medium-density polyethylene	Reduced noise
Wheel mounting	Screw-machine parts	Preassembled with a cold-headed steel shaft	Simplified replacement, more economical
Agitator brush	Horsehair bristles in a die-cast zinc or aluminum brush back	Nylon bristles stapled to a polyethylene brush back	Nylon bristles last seven times longer and are now cheaper than horsehair
Switch toggle	Bakelite molding	Molded ABS	Breakage eliminated
Handle tube	AISI 1010 lock-seam tubing	Electric seam-welded tubing	Less expensive, better dimensional control
Handle bail	Steel stamping	Die-cast aluminum	Better appearance, allowed lower profile for cleaning under furniture
Motor hood	Molded cellulose acetate (replaced Bakelite)	Molded ABS	Reasonable cost, equal impact strength, much improved heat and moisture resistance: eliminated warpage problems
Extension-tube spring latch	Nickel-plated spring steel, extruded PVC cover	Molded acetal resin	More economical
Crevice tool	Wrapped fiber paper	Molded polyethylene	More flexibility
Rug nozzle	Molded ABS	High-impact styrene	Reduced costs
Hose	PVC-coated wire with a single-ply PVC extruded covering	PVC-coated wire with a two-ply PVC extruded covering separated by a nylon reinforcement	More durability, lower cost
Bellows, cleaning-tool nozzles, cord insulation, bumper strips	Rubber	PVC	More economical, better aging and color, less marking

Source: Metal Progress, by permission.

processes may enable a reevaluation of the materials being processed. Improper processing of a well-chosen material can definitely result in a defective product. If satisfactory products are to be made, considerable care must be exercised in selecting *both* the *engineering materials* and the *manufacturing processes* used to produce the product.

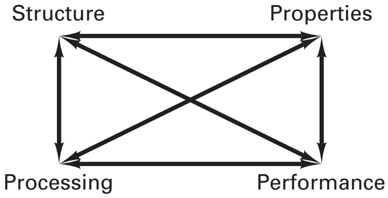

FIGURE 9-4 Schematic showing the interrelation among material, properties, processing, and performance.

Most textbooks on materials and manufacturing processes spend considerable time discussing the interrelationships between the structure and properties of engineering materials, the processes used to produce a product, and the subsequent performance. As Figure 9-4 attempts to depict, each of these aspects is directly related to all of the others. An engineering material may possess different properties depending upon its structure. Processing of that material can alter the structure, which in turn will alter the properties. Altered properties certainly alter performance. The objective of manufacturing, therefore, is to devise an optimized system of material and processes to produce the desired product.

9.3 THE DESIGN PROCESS

The first step in the manufacturing process is *design*—the determining in rather precise detail what it is that we want to produce and, for each component of the product or assembly, what properties it must possess, what to make it out of, how to make it, how many to make, and what conditions it will see during use.

Design usually takes place in several distinct stages: (1) conceptual, (2) functional, and (3) production. During the *conceptual-design* stage, the designer is concerned primarily with the functions that the product is to fulfill. Several concepts are often considered, and a determination is made that the concept is either not practical, or is sound and should be developed further. Here the only concern about materials is that materials exist that could provide the desired properties. If such materials are not available, consideration is given to whether there is a reasonable prospect that new ones could be developed within the limitations of cost and time.

At the *functional- or engineering-design* stage, a workable design is developed, including a detailed plan for manufacturing. Geometric features are determined and dimensions are specified, along with allowable tolerances. Specific materials are selected for each component. Consideration is given to appearance, cost, reliability, producibility, and serviceability, in addition to the various functional factors. It is important to have a complete understanding of the functions and performance requirements of each component and to perform a thorough materials analysis, selection, and specification. If these decisions are deferred, they may end up being made by individuals who are less knowledgeable about all of the functional aspects of the product.

Often, a *prototype* or working model is constructed to permit a full evaluation of the product. It is possible that the prototype evaluation will show that some changes have to be made in either the design or material before the product can be advanced to production. This should not be taken, however, as an excuse for not doing a thorough job. It is strongly recommended that all prototypes be built with the same materials that will be used in production and, where possible, with the same manufacturing techniques. It is of little value to have a perfectly functioning prototype that cannot be manufactured economically in the desired volume or one that is substantially different from what the production units will be like.[2]

---

[2] Because of the prohibitive cost of a dedicated die or pattern, as might be required for forging or casting, one-of-a-kind or limited-quantity prototype parts are often made by machining or one of the newer rapid-prototype techniques. If the objective is simply to verify dimensional fit and interaction, the prototype material may be selected for compatibility with the prototype process. If performance is to be verified, however, it is best to use the proper material and process. Machining, for example, simply cuts through the material structure imparted in the manufacture of the starting bar or plate. Casting erases all prior structure during melting and establishes a new structure during solidification. Metalforming processes reorient the starting structure by plastic flow. The altered features caused by these processes may lead to altered performance.

In the *production-design* stage, we look to full production and determine if the proposed solution is compatible with production speeds and quantities. Can the parts be processed economically, and will they be of the desired quality?

As actual manufacturing begins, changes in both the materials and processes may be suggested. In most cases, however, changes made after the tooling and machinery have been placed in production tend to be quite costly. Good up-front material selection and thorough product evaluation can do much to eliminate the need for change.

As production continues, the availability of new materials and new processes may well present possibilities for cost reduction or improved performance. Before adopting new materials, however, the candidates should be evaluated very carefully to ensure that all of their characteristics related to both processing and performance are well established. Remember that it is indeed rare that as much is known about the properties and reliability of a new material as an established one. Numerous product failures and product liability cases have resulted from new materials being substituted before their long-term properties were fully known.

9.4 PROCEDURES FOR MATERIAL SELECTION

The selection of an appropriate material and its subsequent conversion into a useful product with desired shape and properties can be a rather complex process. Nearly every engineered item goes through a sequence of activities that includes: design → material selection → process selection → production → evaluation → and possible redesign or modification. Numerous engineering decisions must be made along the way.

Several methods have been developed for approaching a design and selection problem. The *case-history method* is one of the simplest. Begin by evaluating what has been done in the past (engineering material and method of manufacture) or what a competitor is currently doing. This can yield important information that will serve as a starting base. Then, either duplicate or modify the details of that solution. The basic assumption of this approach is that similar requirements can be met with similar solutions.

The case-history approach is quite useful, and many manufacturers continually examine and evaluate their competitors' products for just this purpose. The real issue here, however, is "how similar is similar." A minor variation in service requirement, such as a different operating temperature or a new corrosive environment, may be sufficient to justify a totally different material and manufacturing method. In addition, this approach tends to preclude the use of new materials, new technology, and any manufacturing advances that may have occurred since the formulation of the original solution. It is equally unwise, however, to totally ignore the benefits and insights that can be gained through past experience.

Other design and selection activities occur during the *modification of an existing product*, generally in an effort to reduce cost, improve quality, or overcome a problem or defect that has been encountered. A customer may have requested a product like the current one but capable of operating at higher temperatures, or in an acidic environment, or at higher pressure. Efforts here generally begin with an evaluation of the current product and its present method of manufacture. The most frequent pitfall, however, is to overlook one of the original design requirements and recommend a change that in some way compromises the total performance of the product. Examples of such oversights, where materials have been changed to meet a specific objective, are provided in Section 9.8.

The safest and most comprehensive approach to part manufacture is to follow the full sequence of design, material selection, and process selection, considering all aspects and all alternatives. This is the approach one would take in the *development of an entirely new product.*

Before any decisions are made, take the time to fully define the needs of the product. What exactly is the "target" that we wish to hit? We must develop a clear picture of all of the characteristics necessary for this part to adequately perform its intended function and do so with no prior biases about material or method of fabrication. These requirements will fall into three major areas: (1) shape or geometry considerations, (2) property requirements, and (3) manufacturing concerns. By first formulating these requirements, we will be in a better position to evaluate candidate materials and companion methods of fabrication.

GEOMETRIC CONSIDERATIONS

A dimensioned sketch can answer many of the questions about the size, shape, and complexity of a part, and these *geometric* or *shape considerations* will have a strong influence on decisions relating to the proposed method or methods of fabrication.[3] While many features of part geometry are somewhat obvious, geometric considerations are often more complex than first imagined. Typical questions might include:

1. What is the relative size of the component?
2. How complex is its shape? Are there any axes or planes of symmetry? Are there any uniform cross sections? Could the component be divided into several simpler shapes that might be easier to manufacture?
3. How many dimensions must be specified?
4. How precise must these dimensions be? Are all precise? How many are restrictive, and which ones?
5. How does this component interact geometrically with other components? Are there any restrictions imposed by the interaction?
6. What are the surface-finish requirements? Must all surfaces be finished? Which ones do not?
7. How much can each dimension change by wear or corrosion and the part still function adequately?
8. Could a minor change in part geometry increase the ease of manufacture or improve the performance (fracture resistance, fatigue resistance, etc.) of the part?

Producing the right shape is only part of the desired objective. If the part is to perform adequately, it must also possess the necessary *mechanical and physical properties*, as well as the ability to endure anticipated environments for a specified period of time. *Environmental considerations* should include all aspects of shipping, storage, and use! Some key questions include those listed in the following three sections.

MECHANICAL PROPERTIES

1. How much static strength is required?
2. If the part is accidentally overloaded, is it permissible to have a sudden brittle fracture, or is plastic deformation and distortion a desirable precursor to failure?
3. How much can the material bend, stretch, twist, or compress under load and still function properly?
4. Are any impact loadings anticipated? If so, of what type, magnitude, and velocity?
5. Can you envision vibrations or cyclic loadings? If so, of what type, magnitude, and frequency?
6. Is wear resistance desired? Where? How much? How deep?
7. Will all of the above requirements be needed over the entire range of operating temperature? If not, which properties are needed at the lowest extreme? At the highest extreme?

---

[3] Die casting, for example, can be used to produce parts ranging from less than an ounce to more than 100 pounds, but the ideal wall thickness should be less than 5/16 inch. Permanent mold casting can produce thickness up to 2 inches, and there is no limit to the thickness for sand casting. At the same time, dimensional precision and surface finish become progressively worse as we move from die casting, to permanent mold, to sand. Extrusion and rolling can be used to produce long parts with constant cross section. Powder metallurgy parts must be able to be ejected from a compacting die.

PHYSICAL PROPERTIES (ELECTRICAL, MAGNETIC, THERMAL, AND OPTICAL)

1. Are there any electrical requirements? Conductivity? Resistivity?
2. Are any magnetic properties desired?
3. Are thermal properties significant? Thermal conductivity? Changes in dimension with change in temperature?
4. Are there any optical requirements?
5. Is weight a significant factor?
6. How important is appearance? Is there a preferred color, texture, or feel?

ENVIRONMENTAL CONSIDERATIONS

1. What are the lowest, highest, and normal temperatures the product will see? Will temperature changes be cyclic? How fast will temperature changes occur?
2. What is the most severe environment that is anticipated as far as corrosion or deterioration of material properties is concerned?
3. What is the desired service lifetime for the product?
4. What is the anticipated level of inspection and maintenance during use?
5. Should the product be manufactured with disassembly, repairability, or *recyclability* in mind?

MANUFACTURING CONCERNS

A final area of consideration is the variety of factors that will directly influence the method of manufacture. Some of these *manufacturing concerns* are:

1. How many of the components are to be produced? At what rate? (*Note:* One-of-a-kind parts and small quantities are rarely made by processes that require dedicated patterns, molds, or dies, since the expense of the tooling is hard to justify. High-volume, high-rate products may require automatable processes.)
2. What is the desired level of quality compared to similar products on the market?
3. What are the quality control and inspection requirements?
4. Are there any assembly (or disassembly) concerns? Any key relationships or restrictions with respect to mating parts?
5. What are the largest and smallest section thicknesses?
6. Have standard sizes and shapes been specified wherever possible (both as finished shapes and as starting raw material)? What would be the preferred form of starting material (plate, sheet, foil, bar, rod, wire, powder, ingot)?
7. Has the design addressed the requirements that will facilitate ease of manufacture (machinability, castability, formability, weldability, hardenability)?
8. What is the potential liability if the product should fail?
9. Are there any end-of-use disposal concerns?

The considerations just mentioned are only a sample of the many questions that must be addressed when precisely defining what it is that we want to produce. While there is a natural tendency to want to jump to an answer, in this case a material and method of manufacture, time spent determining the various requirements will be well rewarded. Collectively, the requirements direct and restrict material and process selections. It is possible that several families of materials, and numerous members within those families, all appear to be adequate. In this case, selections may become a matter of preference. It is also possible, however, that one or more of the requirements will emerge as a dominant restrictor (such as the need for ultra-high strength, superior wear resistance, the ability to function at extreme operating temperatures, or the ability to withstand highly corrosive environments), and selection then becomes focused on those materials offering that specific characteristic.

It is important that *all* factors be listed and *all* service conditions and uses be considered. Many failures and product liability claims have resulted from engineering oversights or failure to consider the entire spectrum of conditions that a product might experience in its lifetime. Consider the failure of several large electric power transformers where fatigue cracks formed at the base of horizontal cooling fins that had been welded to the exterior of the casing. The subsequent loss of cooling oil through the cracks led to overheating and failure of the transformer coils. Since transformers operate under static conditions, fatigue was not considered in the original design and material selection. However, when the horizontal fins were left unsupported during shipping, the resulting vibrations were sufficient to induce the fatal cracks. It is also not uncommon for the most severe corrosion environment to be experienced during shipping or storage as opposed to normal operation. Products can also encounter unusual service conditions. Consider the numerous parts that failed on earthmoving and construction equipment when it was used in the construction of the trans-Alaskan oil pipeline. When this equipment was originally designed and the materials were selected, extreme subzero temperatures were not included as possible operating conditions.

Once we complete a thorough evaluation of the required properties, it may be helpful to assign a relative importance to the various needs. Some requirements may be absolutes, while others may be *relative*. Absolute requirements are those for which there can be no compromise. The consequence of not meeting them will be certain failure of the product. Materials that fall short of absolute requirements should be automatically eliminated. For example, if a component must possess good electrical conductivity, most plastics and ceramics would not be appropriate. Relative or compromisable properties are those that frequently differentiate "good," "better," and "best," where all would be considered as acceptable.

9.5 ADDITIONAL FACTORS TO CONSIDER

When evaluating candidate materials, an individual is often directed to handbook-type data that has been obtained through standardized materials characterization tests. It is important to note the conditions of these tests in comparison with those of the proposed application. Significant variations in factors such as temperature, rates of loading, or surface finish can lead to major changes in a material's behavior. In addition, one should keep in mind that the handbook values often represent an average or mean and that actual material properties may vary to either side of that value. Where vital information is missing or the data may not be applicable to the proposed use, one is advised to consult with the various materials producers or qualified materials engineers.

At this point it is probably appropriate to introduce *cost* as an additional factor. Because of competition and marketing pressures, economic considerations are often as important as technical ones. However, we have chosen to adopt the philosophy that cost should not be considered until a material has been shown to meet the necessary requirements. If acceptable candidates can be identified, cost will certainly become an important part of the selection process, and both material cost and the cost of fabrication should be considered.[4] Often, the final decision involves some form of compromise among material cost, ease of fabrication, and performance or quality. Numerous questions might be asked, such as:

1. Is the material too expensive to meet the marketing objectives?
2. Is a more expensive material justifiable if it offers improved performance?
3. How much additional expense might be justified to gain ease of fabrication?

In addition, it is important that the appropriate cost figures be considered. Material costs are most often reported in the form of dollars per pound or some other form of cost per unit weight. If the product has a fixed size, however, material comparisons should probably be based on cost per unit volume. For example, aluminum has a density about one-third that of steel. For products where the size is fixed, 1 pound of aluminum

---

[4] A more appropriate cost consideration might be total lifetime cost, which begins with the starting material, the energy to produce it, and the environmental impact of its production. To this are added the cost of converting it into the desired product, the cost of operating or using the product through its full lifetime, and finally the cost of disposal or recycling.

can be used to produce three times as many parts as 1 pound of steel. If the per-pound cost of aluminum were less than three times that of steel, aluminum would actually be the cheaper material. Whenever the densities of materials are quite different, as with magnesium and stainless steel, the relative rankings based on cost per pound and cost per cubic inch can be radically different.

Material availability is another important consideration. The material selected may not be available in the size, quantity, or shape desired, or it may not be available in any form at all. The diversity and reliability of supply may be additional factors that will facilitate competitive pricing and avoid production bottlenecks. If availability or supply may be a problem, one should be prepared to recommend alternative materials, provided that they, too, are feasible candidates for the specific use.

Still other factors to be considered when making material selections include:

1. Are there possible misuses of the product that should be considered? If the product is to be used by the general public, one should definitely anticipate the worst. Screwdrivers are routinely used as chisels and pry bars (different forms of loading from the intended torsional twist). Scissors may be used as wire cutters. Other products are similarly misused.
2. Have there been any failures of this or similar products? If so, what were the identified causes and have they been addressed in the current product? Failure analysis results should definitely be made available to the designers, who can directly benefit from them.
3. Has the material (or class of materials) being considered established a favorable or unfavorable performance record? Under what conditions was unfavorable performance noted?
4. Has an attempt been made to benefit from material standardization, whereby multiple components are manufactured from the same material or by the same manufacturing process? Although function, reliability, and appearance should not be sacrificed, one should not overlook the potential for savings and simplification that standardization has to offer.

9.6 CONSIDERATION OF THE MANUFACTURING PROCESS

The overall attractiveness of an engineering material depends not only on its physical and mechanical properties but also on our ability to shape it into useful objects in an economical and timely manner. Without the necessary shape, parts cannot perform, and without economical production, the material will be limited to a few high-value applications. For this reason, our material selection should be further refined by considering the possible fabrication processes and the suitability of each "prescreened" material to each of those processes. Familiarity with the various manufacturing alternatives is a necessity, together with a knowledge of the associated limitations, economics, product quality, surface finish, precision, and so on. All processes are not compatible with all materials. Steel, for example, cannot be fabricated by die casting. Titanium can be forged successfully by isothermal techniques but generally not by conventional drop hammers. Wrought alloys cannot be cast, and casting alloys are not attractive for forming.

Certain fabrication processes have distinct ranges of product size, shape, and thickness, and these should be compared with the requirements of the product. Each process has its characteristic precision and surface finish. Since secondary operations, such as machining, grinding, and polishing, all require the handling, positioning, and processing of individual parts, as well as additional tooling, they can add significantly to manufacturing cost. Usually it is best to hit the target with as few operations as possible. Some processes require prior heating or subsequent heat treatment. Still other considerations include production rate, production volume, desired level of automation, and the amount of labor required, especially if it is skilled labor. All of these concerns will be reflected in the cost of fabrication. There may also be additional constraints, such as the need to design a product so that it can be produced with existing equipment or facilities, or with a minimum of lead time, or with a minimal expenditure for dedicated tooling.

It is not uncommon for a certain process to be implied by the geometric details of a component design, such as the presence of cored features in a casting, the magnitude of draft allowances, or the recommended surface finish. The designer often specifies these features prior to consultation with manufacturing experts. It is best, therefore, to consider all possible methods of manufacture and, where appropriate, work with the designer to incorporate changes that would enable a more attractive means of production.

9.7 ULTIMATE OBJECTIVE

The real objective of this activity is to develop a manufacturing system—a combination of material and process (or sequence of processes) that is the best solution for a given product. Figure 9-5 depicts a series of activities that move from a well-defined set of needs and objectives through material and process selection to the manufacture and evaluation of a product. Numerous decisions are required, most of which are judgmental in nature. For example, we may have to select among "good," "better," and "best," where "better" and "best" carry increments of added cost, or make compromises when all of the requirements cannot be simultaneously met.

While Figure 9-5 depicts the various activities as having a definite, sequential pattern, one should be aware that they are often rearranged and are definitely interrelated. Figure 9-6 shows a modified form, where material selection and process selection have been moved to be parallel instead of sequential. It is not uncommon for one of the two selections to be dominant and the other to become dependent or secondary. For example, the production of a large quantity of small, intricate parts with thin walls, precise dimensions, and smooth surfaces is an ideal candidate for die casting. Material selection, therefore, may be limited to die-castable materials—assuming feasible alternatives are available. In a converse example, highly restrictive material properties, such as the ability to endure extremely elevated temperatures or severe corrosive environments, may significantly limit the material options. Fabrication options will tend to be limited to those processes that are compatible with the candidate materials.

In both models, decisions in one area generally impose restrictions or limitations in another. As shown in Figure 9-7 selection of a material may limit processes, and selection

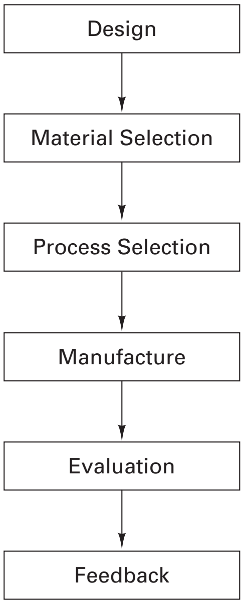

FIGURE 9-5 Sequential flow chart showing activities leading to the production of a part or product.

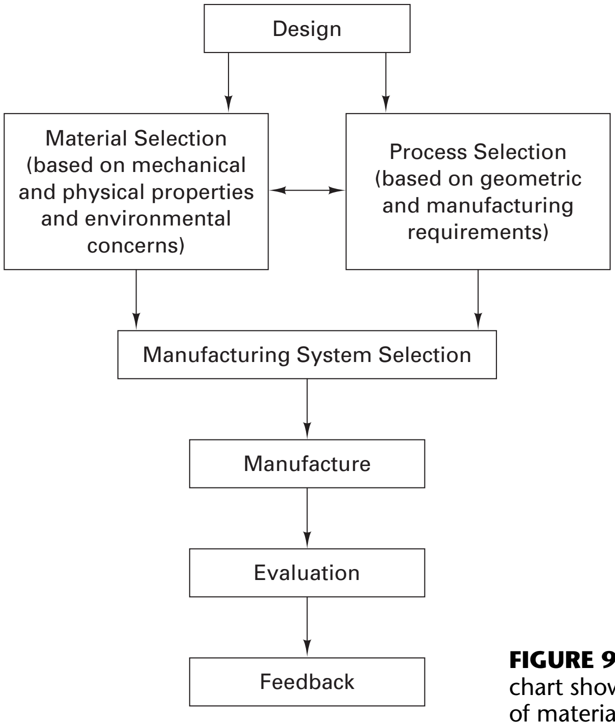

FIGURE 9-6 Alternative flow chart showing parallel selection of material and process.

Material Process	Irons	Steel	Aluminum	Copper	Magnesium	Nickel	Refractory Metals	Titanium	Zinc
Sand Casting	X	X	X	X	X	X			0
Permanent Mold Cast	X	0	X	0	X	0			0
Die Casting			X	0	X				X
Investment Casting		X	X	X	0	0			
Closed-Die Forging		X	0	0	0	0	0	0	
Extrusion		0	X	X	X	0	0	0	
Cold Heading		X	X	X		0			
Stamping, Deep Draw		X	X	X	0	X		0	0
Screw Machine	0	X	X	X	0	X	0	0	0
Powder Metallurgy	X	X	0	X		0	X	0	

Key: X = Routinely performed
0 = Performed with difficulty, caution, or some sacrifice (such as die life)
Blank = Not recommended

FIGURE 9-7 Compatibility chart of materials and processes. Selection of a material may restrict possible processes. Selection of a process may restrict possible materials.

of a process may limit material. Each material has its own set of performance characteristics, both strengths and limitations. The various fabrication methods impart characteristic properties to the material, and all of these may not be beneficial (consider anisotropy, porosity, or residual stresses). Processes designed to improve certain properties (such as heat treatment) may adversely affect others. Economics, environment, energy, efficiency, recycling, inspection, and serviceability all tend to influence decisions.

On rare occasions, a single solution will emerge as the obvious choice. More likely, several combinations of materials and processes will all meet the specific requirements, each with its own strengths and limitations. Compromise, opinion, and judgment all enter into the final decision making, where our desire is to achieve the best solution while not overlooking a major requirement. Listing and ranking the required properties will help ensure that all of the necessary factors were considered and weighed in making the ultimate decision. If no material–process combination meets the requirements, or if the compromises appear to be too severe, it may be necessary to redesign the product, adjust the requirements, or develop new materials or processes.

The individuals making materials and manufacturing decisions must understand the product, the materials, the manufacturing processes, and all of the various interrelations. This often requires multiple perspectives and diverse expertise, and it is not uncommon to find the involvement of an entire team. Design engineers ensure that each of the requirements is met and that any compromise or adjustment in those requirements is acceptable. Materials specialists bring expertise in candidate materials and the effects of various processing. Manufacturing personnel know the capabilities of processes, the equipment available, and the cost of associated tooling. Quality and environmental specialists add their perspective and expertise. Failure analysis personnel can share valuable experience gained from past unsuccessful efforts. Customer representatives or marketing specialists may also be consulted for their opinions. Clear and open communication is vital to the making of sound decisions and compromises.

The design and manufacture of a successful product is an iterative, evolving, and continual process. The failure of a component or product may have revealed deficiencies in design, poor material selection, material defects, manufacturing defects, improper assembly, or improper or unexpected product use. The costs of both material and processing continually change, and these changes may prompt a reevaluation. The availability of new materials, technological advances in processing methods, increased restrictions in environment or energy, or the demand for enhanced performance of an existing product all provide a continuing challenge. Materials availability may also have become an issue. A change in material may well require companion changes in the manufacturing process. Improvements in processing may warrant a reevaluation of the material.

9.8 MATERIALS SUBSTITUTION

As new technology is developed or market pressures arise, it is not uncommon for new materials to be substituted into an existing design or manufacturing system. Quite often, the substitution brings about improved quality, reduced cost, ease of manufacture, simplified assembly, or enhanced performance. When making a *material substitution*, however, it is also possible to overlook certain requirements and cause more harm than good.

Consider the efforts related to the production of lighter-weight, more fuel-efficient, less emission-producing automobiles. The development of high-strength low-alloy steel sheets (HSLA) provided the opportunity to match the strength of traditional body panels with thinner-gage material. Once some of the early forming and fabrication problems were overcome, the substitution appeared to be a natural one. However, it is important to consider the total picture and become aware of any possible compromises. While strength was indeed increased, corrosion resistance and elastic stiffness (rigidity) remained essentially unaltered. The thinner sheets would corrode in a shorter time, and previously unnoticed vibrations could become a significant problem. Measures to retard corrosion and design modifications to reduce vibration would probably be necessary before the new material could be effectively substituted. Aluminum sheet has replaced steel panels, enabling a 50% reduction in weight, but the vibration problems associated with the lower elastic modulus required special design consideration.

Aluminum castings might be considered as an alternative to cast iron for engine blocks and transmission housings. Corrosion resistance would be enhanced and weight savings would be substantial. However, the mechanical properties must be ensured to be adequate, and consideration would also have to be given to the area of noise and vibration. Gray cast iron has excellent damping characteristics and effectively eliminates these undesirable features. Aluminum transmits noise and vibration, and its use in transmission housings would probably require the addition of some form of sound isolation material. When aluminum was first used for engine blocks, the transmitted vibrations required a companion redesign of the engine support system.

Polymeric materials have been used successfully for body panels, bumpers, fuel tanks, pumps, and housings. Composite-material drive shafts have been used in place of metal. Cast metal, powder metallurgy products, and composite materials have all been used for connecting rods. Ceramic and reinforced plastic components have been used for engine components. Magnesium is being used for instrument panels and steering wheels. Fiber-reinforced polymer composite has been used to produce the cargo beds for pickup trucks. When making a material substitution in a successful product, however, it is important to first consider all of the design requirements. Approaching a design or material modification as thoroughly as one approaches a new problem may well avoid costly errors.

Table 9-2 summarizes some of the weight-saving material substitutions that have been used on automobiles and calls attention to the fact that many of these substitutions are accompanied by an increase in cost, where total cost incorporates both cost of the material itself and the cost of converting that material into the desired product.

9.9 EFFECT OF PRODUCT LIABILITY ON MATERIALS SELECTION

Product liability actions, court awards, and rising insurance costs have made it imperative that designers and manufacturers employ the very best procedures in selecting and processing materials. Although many individuals feel that the situation has grown to absurd proportions, there have also been many instances where sound procedures were not

TABLE 9-2 Material Substitutions to Reduce Weight in an Automobile[a]

New Material	Previous Material	Weight Reduction	New Relative Cost
High-strength steel	Mild steel	10%	100% (no change)
Aluminum	Steel or cast iron	40–60%	130–200%
Magnesium	Steel or cast iron	60–75%	150–250%
Magnesium	Aluminum	25–35%	100–150%
Glass fiber reinforced plastic	Steel	25–35%	100–150%

[a] Data taken from "Automotive Materials in the 21st Century," by William F. Powers, published in *Advanced Materials and Processes*, May 2000.

used in selecting materials and methods of manufacture. In today's business and legal climate, such negligence cannot be tolerated.

An examination of recent product liability claims has revealed that the five most common causes have been:

1. Failure to know and use the latest and best information about the materials being specified
2. Failure to foresee, and account for, all reasonable uses of the product
3. Use of materials for which there were insufficient or uncertain data, particularly with regard to long-term properties
4. Inadequate and unverified quality control procedures
5. Material selection made by people who were completely unqualified

An examination of these faults reveals that there is no good reason for them to exist. Consideration of each, however, is good practice when seeking to ensure the production of a quality product and can greatly reduce the number and magnitude of product liability claims.

9.10 AIDS TO MATERIAL SELECTION

From the discussion in this chapter, it is apparent that those who select materials should have a broad, basic understanding of the nature and properties of materials and their processing characteristics. Providing this background is a primary purpose of this text. The number of engineering materials is so great, however, and the mass of information that is both available and useful is so large, that a single book of this type and size cannot be expected to furnish all that is required. Anyone who does much work in material selection needs to have ready access to many sources of data.

It is almost imperative that one have access to the information contained in the various volumes of *Metals Handbook*, published by ASM International. This multivolume series contains a wealth of information about both engineering metals and associated manufacturing processes. The one-volume *Metals Handbook Desk Edition* provides the highlights of this information in a less voluminous, more concise format. A parallel *ASM Engineered Materials Handbook* series and one-volume *Desk Edition* provides similar information for composites, plastics, adhesives, and ceramics. These resources are also available on computer CD-ROMs and directly via the Internet through paid subscription.

ASM also offers a one-volume *ASM Metals Reference Book* that provides extensive data about metals and metalworking in tabular or graphic form. *Smithells Metal Reference Book* provides nearly 2000 pages of useful information and data. Additional handbooks are available for specific classes of materials, such as titanium alloys, stainless steels, tool steels, plastics, and composites. Various technical magazines often provide annual issues that serve as information databooks. Some of these include *Modern Plastics, Industrial Ceramics*, and ASM's *Advanced Materials and Processes*.

Persons selecting materials and processes should also have available several of the handbooks published by various materials organizations, technical societies, and trade associations. These may be material related (such as the Aluminum Association's *Aluminum Standards and Data* and the Copper Development Association's *Standards Handbook: Copper, Brass, and Bronze*), process related (such as the *Steel Castings Handbook* by the Steel Founder's Society of America and the *Heat Treater's Guide* by ASM International), or profession related (such as the *SAE Handbook* by the Society of Automotive Engineers, the *ASME Handbook* by the American Society for Mechanical Engineers, and the *Tool and Manufacturing Engineers Handbook* by the Society for Manufacturing Engineers). These may be supplemented further by a variety of supplier-provided information. While the latter is excellent and readily available, the user should recognize that supplier information might not provide a truly objective viewpoint.

It is also important to have accurate information on the cost of various materials. Since these tend to fluctuate, it may be necessary to consult a daily or weekly publication such as the *American Metal Market* newspaper or online service. Costs associated with various processing operations are more difficult to obtain and can vary greatly from one company to another. These costs may be available from within the firm or may have to be estimated from outside sources. A variety of texts and software packages are available.

Each of the above references provides focused information about a class of materials or a specific type of process. A number of texts have attempted to achieve integration with a focus on design and material selection. Possibly the most well known is the work of M. F. Ashby, with his *Materials Selection in Mechanical Design* text and tools, and the Cambridge Materials Selector database that was developed to use them.

With the evolution of high-speed computers with large volumes of searchable memory, materials selection can now be computerized. Most of the textbook and handbook references are now available on CDs or directly on the Internet, and all of the information in an entire handbook series can be accessed almost instantaneously. Programs have been written to utilize information databases and actually perform materials selection. The various property requirements can be specified and the entire spectrum of engineering materials can be searched to identify possible candidates. Search parameters can then be tightened or relaxed so as to produce a desired number of candidate materials. In a short period of time, a wide range of materials can be considered, far greater than could be considered in a manual selection. Process simulation packages can then be used to verify the likelihood of producing a successful product.

While the capabilities of computers and computer software are indeed phenomenal, the knowledge and experience of trained individuals should not be overlooked. Experienced personnel should reevaluate the final materials and manufacturing sequence to ensure full compliance with the needs of the product.

The appendix titled "Selected References For Additional Study" provides on extensive list of additional resources.

■ Key Words

absolute requirement
case history
conceptual design
cost
design
environmental considerations
functional design
geometric requirements
manufacturing concerns
material availability
material selection
material substitution
mechanical properties
physical properties
product liability
production design
prototype
recyclability
relative requirement
service environment

■ Review Questions

1. What is the objective of a manufacturing operation, and what are some of the details in meeting this objective?
2. What are some possible undesirable features of significantly exceeding the requirements of a product?
3. In a manufacturing environment, why should the selection and use of engineering materials be a matter of constant reevaluation?
4. How have different materials enabled advances and specializations in bicycle manufacture?
5. Discuss the interrelation between engineering material and the fabrication processes used to produce the desired shape and properties.
6. What is design?

7. What are the three primary stages of product design, and how does the consideration of materials differ in each?
8. What is the benefit of requiring prototype products to be manufactured from the same materials that will be used in production and by the same manufacturing techniques?
9. What sequence of activities is common to nearly every engineered component or product?
10. What are some of the possible pitfalls in the case-history approach to materials selection?
11. What is the most frequent pitfall when seeking to improve an existing product?
12. What should be the first step in any materials selection problem?
13. In what ways do the concept of shape or geometry go beyond a dimensioned sketch?
14. How might temperature enter into the specification of mechanical properties?
15. What are "physical properties" of materials?
16. What are some of the important aspects of the service environment to be considered when selecting an engineering material?
17. What are some of the possible manufacturing concerns that should be considered?
18. Why is it important to resist jumping to the answer and first perform a thorough evaluation of product needs and requirements, considering all factors and all service conditions?
19. What is the difference between an absolute and relative requirement?
20. What are some possible pitfalls when using handbook data to assist in materials selection?
21. Why might it be appropriate to defer cost considerations until after evaluating the performance capabilities of various engineering materials?
22. Give an example of a product or component where material cost should be compared on a cost-per-pound basis. Give a contrasting example where cost per unit volume would be more appropriate.
23. In what way might failure analysis data be useful in a material selection decision?
24. Why should consideration of the various fabrication process possibilities be included in material selection? What aspects of a manufacturing process should be considered?
25. Why might it be better to perform material selection and process selection in a parallel, as opposed to sequential, fashion?
26. Give an example of where selection of a material may limit processes and where selection of a process may limit materials.
27. Why is it likely that multiple individuals will be involved in the material and process selection activity?
28. Why should the design and manufacture of a successful product be an iterative, evolving, and continual process?
29. Give an example of an unexpected problem that occurred in a materials substitution.
30. What are some of the most common causes of product liability losses?
31. How have high-speed, high-capacity computers changed materials selection? Have they replaced trained individuals?

Problems

1. One simple tool that has been developed to assist in materials selection is a rating chart, such as the one shown in Figure 9-A. Absolute properties are identified and must be present for a material to be considered. The various relative properties are weighted as to their significance, and candidate materials are rated on a scale such as 1 to 5 or 1 to 10 with regard to their ability to provide that property. A rating number is then computed by multiplying the property rating by its weighted significance and summing the results. Potential materials can then be compared in a uniform, unbiased manner, and the best candidates can often be identified. In addition, by placing all the requirements on a single sheet of paper, the designer is less likely to overlook a major requirement. Finalist materials should then be reevaluated to assure that no key requirement has been overlooked or excessively compromised.

   Three materials,—X, Y, and Z,—are available for a certain use. Any material selected must have good weldability. Tensile strength, stiffness, stability, and fatigue strength have also been identified as key requirements. Fatigue strength is considered the most important of these requirements, and stiffness is least important. The three materials can be rated as follows:

	X	Y	Z
Weldability	Excellent	Poor	Good
Tensile strength	Good	Excellent	Fair
Stiffness	Good	Good	Good
Stability	Good	Excellent	Good
Fatigue strength	Fair	Good	Excellent

   Develop a rating chart such as that in Figure 9-A to determine which material you would recommend.
2. The chalk tray on a classroom chalkboard has very few performance requirements. As a result, it can be made from a wide spectrum of materials. Wood, aluminum, and even plastic have been used in this application. Discuss the performance and durability requirements and the pros and cons of the three listed materials. Chalk trays have a continuous cross section, but the processes used to produce such a configuration may vary with material. Discuss how a chalk tray might be mass-produced from each of the three materials classifications. Might this be a candidate for some form of wood by-product similar to particle board? Since the product demands are low, might some form of recycled material be considered?
3. Examine the properties of wood, aluminum, and extruded vinyl as they relate to household window frames. Discuss the pros and cons of each, considering cost, ease of manufacture, and aspects of performance, including strength, energy efficiency, thermal expansion and contraction, response to moisture and humidity, durability, rigidity, appearance (the ability to be finished in a variety of colors), ease of maintenance, property changes with low and high extremes of temperature, and any other factor that you feel is important. Which would be your preference for your particular location? Might your preference change if you were located in the dry Southwest (e.g., Arizona), New England, Alaska, or Hawaii? Can you imagine some means of combining materials to produce windows that might be superior to any single material? Which of the features above would apply to residential home siding?
4. Automobile body panels have been made from carbon steel, high-strength steel, aluminum, and various polymer-based molding compounds (both thermoplastic and thermoset). Discuss the key material properties and the relative performance characteristics of each, considering both use and manufacture.

Rating chart for selecting materials

Material	Go-No-Go** screening			Relative rating number (†rating number x *weighting factor)								Material rating number
	Corrosion	Weldability	Brazability	Strength (5)*	Toughness (5)	Stiffness (5)	Stability (5)	Fatigue (4)	As-welded strength (4)	Thermal stresses (3)	Cost (1)	$\frac{\Sigma \text{ rel rating no.}}{\Sigma \text{ rating factors}}$

*Weighting factor = 1 lowest to 5 most important

† Range = 1 poorest to 5 best

**Code = S = satisfactory
U = unsatisfactory

FIGURE 9-A Rating chart for comparing materials for a specific application.

For what type of vehicle might you prefer the various materials? Consider low-volume versus high-volume production, family versus commercial versus performance, low-cost versus luxury, and so on. How might preferences change if recyclability were required?

5. Consider the two-wheel bicycle frame and the variety of materials that have been used in its construction—low-carbon plain-carbon steel, somewhat higher-carbon chrome-moly alloy steel, cold-drawn aluminum tubing (strengthened by cold work), age-hardened aluminum tubing (strengthened by the age-hardening heat treatment), titanium alloy, fiber-reinforced composite, and still others. Some can be assembled by conventional welding or brazing. Others require low-temperature joining methods, since exposure to high temperature will compromise material strength. For still others, a one-piece structure (no joints) may be feasible. Select a material other than steel, and discuss the possible methods of manufacture and concerns you might have. Would your solution be appropriate for high- or low-production bicycles? Would it be good for pleasure bikes? Rugged mountain bikes? Racing bikes? What would be its unique selling features?
6. Go to the local hardware or building supply store and examine a specific class of fastener (nail, screw, bolt, rivet, etc.). Is it available in different grades or classes based on strength or intended use? What are they and how do they differ? How might the materials and methods of manufacture be different for these identified groups? Summarize your findings.
7. Decorative fence posts for a residential home have been made from wood, extruded PVC, recycled polyethylene, decorative concrete, and various metals. Discuss the key material requirements and the pros and cons of the various potential materials.
8. The individual turbine blades used in the exhaust region of jet engines must withstand high temperatures, high stresses, and highly corrosive operating conditions. These demanding conditions severely limit the material possibilities, and most jet engine turbine blades have been manufactured from one of the high-temperature superalloys. The fabrication processes are limited to those that are compatible with both the material and the desired geometry. Through the 1960s and early 1970s the standard method of production was investment casting, and the resultant product was a polycrystalline solid with thousands of polyhedral crystals. In the 1970s production shifted to unidirectional solidification, where elongated crystals ran the entire length of the blade. More recently, advances have enabled the production of single-crystal turbine blades. Investigate this product to determine how the various material and processing conditions produce products with differing performance characteristics.

Chapter 9 CASE STUDY

Material Selection

This study is designed to get you to question why parts are made from a particular material and how they could be fabricated to their final shape. For one or more of the products listed below, write a brief evaluation that addresses the following questions.

QUESTIONS:

1. What are the normal use or uses of this product or component? What are the normal operating conditions in terms of temperatures, loadings, impacts, corrosive media, and so on? Are there any unusual extremes?
2. What are the major properties or characteristics that the material must possess in order for the product to function?
3. What material (or materials) would you suggest and why?
4. How might you propose to fabricate this product?
5. Would the product require heat treatment? For what purpose? What kind of treatment?
6. Would this product require any surface treatment or coating? For what purpose? What would you recommend?
7. Would there be any concerns relating to environment? Recycling? Product liability?

PRODUCTS:

A. The head of a carpenter's claw hammer
B. The exterior of an office filing cabinet
C. A residential interior doorknob
D. A paper clip
E. Staples for an office stapler
F. A pair of scissors
G. A moderate to high-quality household cook pot or frying pan
H. A case for a jeweler-quality wristwatch
I. A jet engine turbine blade to operate in the exhaust region of the engine
J. A standard open-end wrench
K. A socket-wrench socket to install and remove spark plugs
L. The frame of a 10-speed bicycle
M. Interior panels of a microwave oven
N. Handle segments of a retractable blade utility knife with internal storage for additional blades
O. The outer skin of an automobile muffler
P. The exterior case for a classroom projector
Q. The basket section of a grocery store shopping cart
R. The body of a child's toy wagon
S. A decorative handle for a kitchen cabinet
T. An automobile radiator
U. The motor housing for a chain saw
V. The blade of a household screwdriver
W. Household dinnerware (knife, fork, and spoon)
X. The blades on a high-quality cutlery set
Y. A shut-off valve for a $\frac{1}{2}$-in. household water line
Z. The base plate (with heating element) for an electric steam iron
AA. The front sprocket of a 10-speed bicycle
BB. The load-bearing structure of a child's outdoor swing set
CC. The perforated spin tub of a washing machine
DD. A commemorative coin for a corporation's 100th anniversary
EE. The keys for a commercial-quality door lock
FF. The exterior canister for an automobile oil filter

CHAPTER 10

MEASUREMENT AND INSPECTION AND TESTING

10.1 INTRODUCTION

Measurement, the act of measuring or being measured, is the fundamental activity of testing and inspection. The intent of *inspection* is to ensure that what is being manufactured will conform to the specifications of the product. *Testing* evaluates product quality or performance; trying to ensure there are no defects to impair performance as is often a form of final inspection

Most products are manufactured to standard sizes and shapes. For example, the base of a 60-W light bulb has been standardized so that when one bulb burns out, the next will also fit the socket in the lamp. The socket in the lamp has also been designed and made to accept the standard bulb size. Christmas tree light bulbs are made to a different standard size. Standardization is a necessity for interchangeable parts and is also important for economic reasons. A 69-W light bulb cannot be purchased because that is not a standard wattage. Light bulbs are manufactured only in standard wattages so that they can be mass-produced in large volumes by high-speed automated equipment. This results in a low unit cost.

Large-scale manufacturing based on the principles of standardization of sizes and interchangeable parts became common practice early in the twentieth century. Size control must be built into machine tools and workholding devices through the precision manufacture of these machines and their tooling. The output of the machines must then be checked carefully (1) to determine the capability of specific machines and (2) for the control and maintenance of the quality of the product. A designer who specifies the dimensions and tolerances of a part often does so to enhance the function of the product, but the designer is also determining the machines and processes needed to make the part. Frequently, the design engineer has to alter the design or the specifications to make the product easier or less costly to manufacture, assemble, or inspect (or all of these). Designers should always be prepared to do this provided that they are not sacrificing functionality, product reliability, or performance.

ATTRIBUTES VERSUS VARIABLES

The examination of the product during or after manufacture, manually or automatically, falls in the province of *inspection*. Basically, inspection of items or products can be done in two ways:

1. By *attributes*, using gages to determine if the product is good or bad, resulting in a yes/no, go/no-go decision.
2. By *variables*, using calibrated instruments to determine the actual dimensions of the product for comparison with the size desired.

In an automobile, a speedometer and oil pressure gage are variable types of measuring instruments, and an oil pressure light is an attributes-type of gage. As is typical of an attributes gage, the driver does not know *what* the pressure actually is if the light goes on, only that it is not good. On the factory floor, *measurement* is the generally accepted industrial term for inspection by variables. *Gaging* (or *gauging*) is the term for determining whether the dimension or characteristic is larger or smaller than the established standard or is within some range of acceptability. Variable types of inspection generally take more time and are more expensive than attribute inspection, but they yield more information because the magnitude of the characteristic is known in some standard unit of measurement.

10.2 STANDARDS OF MEASUREMENT

The four fundamental measures on which all others depend are *length, time, mass*, and *temperature*. Three of these basic measures are defined in terms of material constants, as shown in Table 10-1, along with the original definitions. These four measures, along with the *ampere* and the *candela*, provide the basis for all other units of measurement, as shown in Figure 10-1, along with the original definitions. Most mechanical measurements involve combinations of units of mass, length, and time. Thus, the newton, a unit of force, is derived from Newton's second law of motion ($f = ma$) and is defined as the force that gives an acceleration of 1m/sec/sec to a mass of 1 kilogram. Figure 10-2 and Table 10-2 provide basic metric-to-English conversions.

LINEAR STANDARDS

When people first sought a unit of length, they adopted parts of the human body, mainly the hands, arms, or feet. Such tools were not very satisfactory because they were not universally standard in size. Satisfactory measurement and gaging must be based on

TABLE 10-1 International System of Units, Founded on Seven Base Quantities on Which All Others Depend

Quantity	Name of Base	Symbol	Definition or Comment
Length	Meter (or metre)	m	Original: 1/10,000,000 of quadrant of earth's meridian passing through Barcelona and Dunkirk. Present: 1,650,763.73 wavelengths in vacuum of transition between energy levels $2p_{10}$ and $5d_5$ of krypton-86 atoms, excited at triple point of nitrogen (−210°C).
Mass	Kilogram	kg	Original: Mass of 1 cubic decimeter (1000 cubic centimeters) of water at its maximum density (4°C). Present: Mass of Prototype Kilogram No. 1 kept at International Bureau of Weights and Measures at Sèvres, France.
Time	Second	s	Original: 1/86,400t of mean solar day. Present: 9,192,631,770 cycles of frequency associated with transition between two hyperfine levels of isotope cesium-133.
Electric current	Ampere		Present: The rate of motion of charge in a circuit is called the *current*. The unit of current is the *ampere*. One ampere exists when the charge flows at a rate of 1 coulomb per second.
Thermodynamic	Degree Celsius	°C (K)	Present: 1/273.16 of the thermodynamic temperature of the triple point of temperature (Kelvin) water (0.01°C).
Amount of substance	Mole	mol	Present: A mole is an artificially chosen number ($N_0 = 6.02 \times 10^{23}$) that measures the number of molecules.
Luminous intensity	Candle		Present: One lumen per square foot is a footcandle.

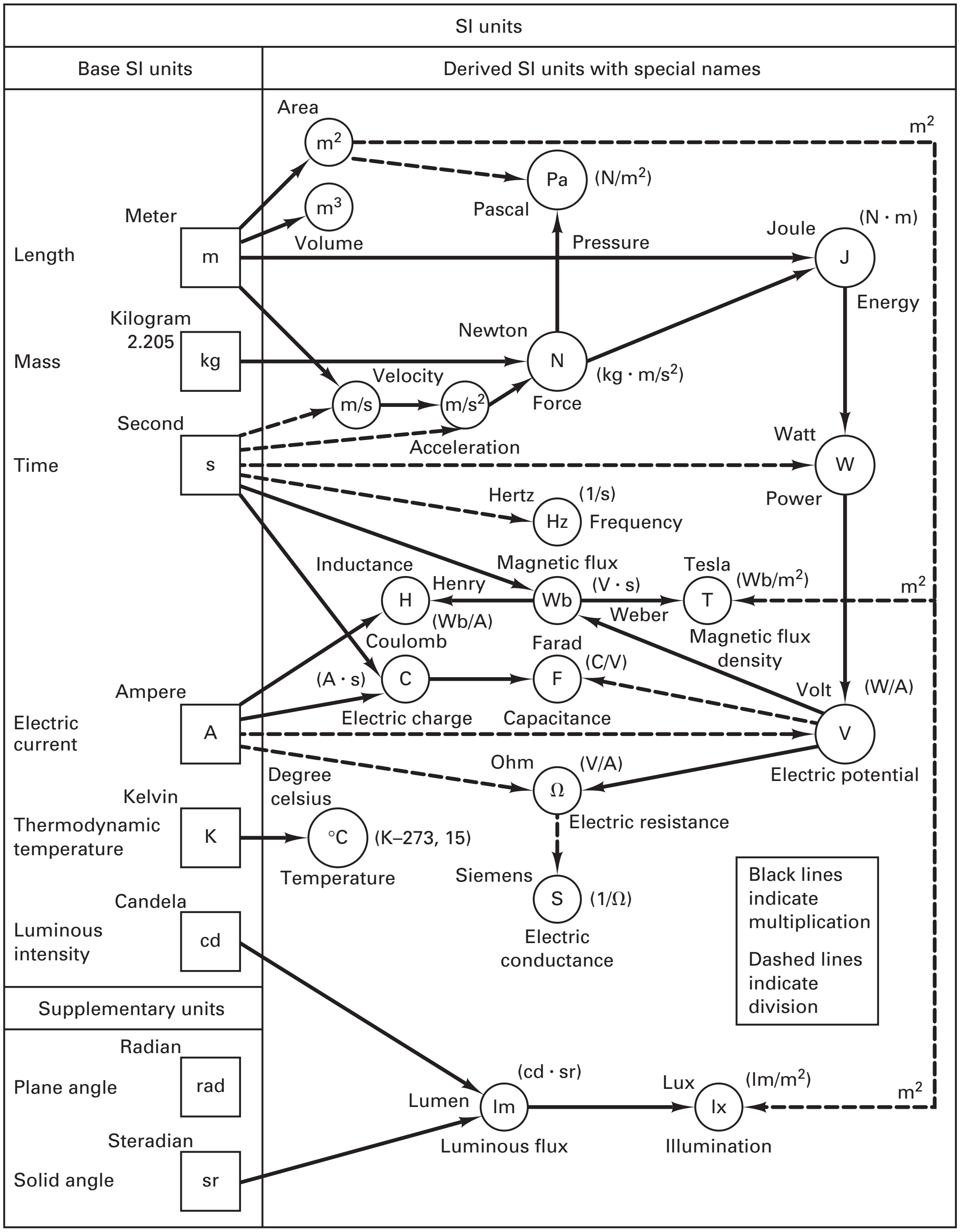

FIGURE 10-1 Relationship of secondary physical quantities to basic SI units. Solid lines signify multiplication; dashed lines signify division.

reliable, preferably universal, standards. These have not always existed. For example, although the musket parts made in Eli Whitney's shop were interchangeable, they were not interchangeable with parts made by another contemporary gunmaker *from the same drawings* because the two gunsmiths *had different foot rulers*. Today, the entire industrialized world has adopted the *international meter* as the standard of linear measurement. The inch, used by both the United States and Great Britain, has been defined officially as 2.54 centimeters. The U.S. standard inch is 41,929.399 wavelengths of the orange-red light from krypton-86.

Although *officially* the United States is committed to conversion to the metric (SI) system of measurement, which uses millimeters for virtually all linear measurements in

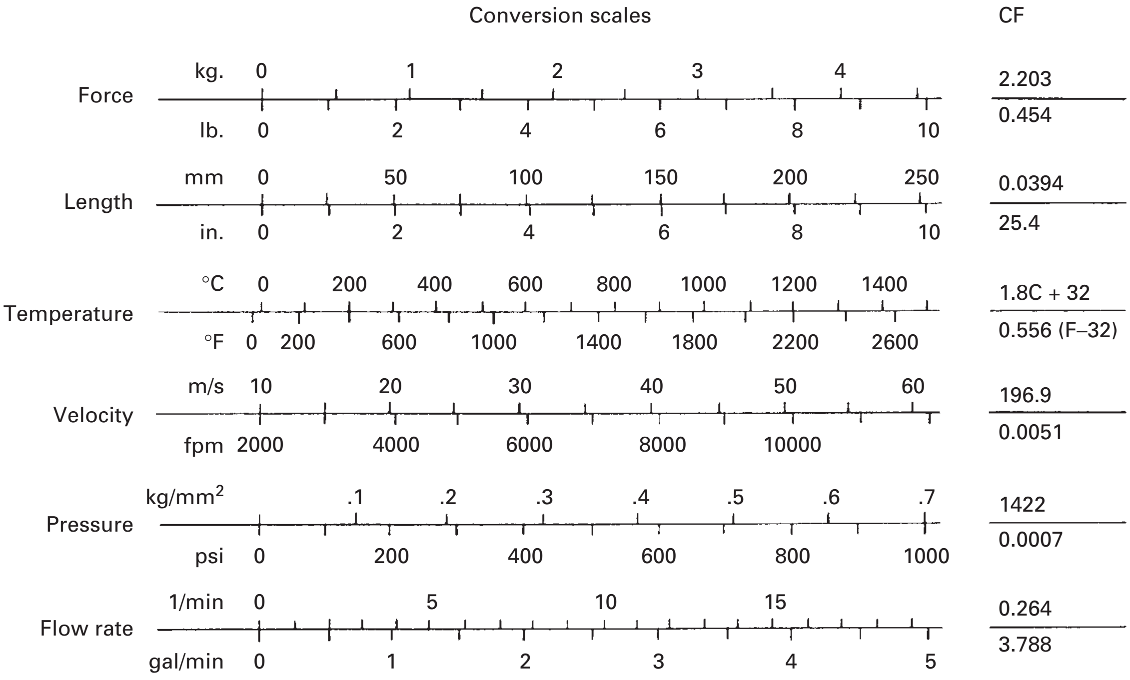

CF = conversion factor; examples: 10 kg = (2.203) (10) lb; 10 in. = 2.54 (10) mm;
1 newton ≃ 0.1 kg ≃ 0.22 lb; 1 micron = 40 microinches

FIGURE 10-2 Metric-to-English conversion of some widely used measures in engineering.

manufacturing, the English system of feet and inches is still being used by many manufacturing plants, and its use will probably continue for some time.

LENGTH STANDARDS IN INDUSTRY

Gage blocks provide industry with linear standards of high accuracy that are necessary for everyday use in manufacturing plants. The blocks are small, rectangular, square, or round in cross section and are made from steel or carbide with two very flat and parallel surfaces that are certain specified distances apart (see Figure 10-3). These gage blocks were first conceived by Carl E. Johansson in Sweden just before 1900. By 1911 he was able to produce sets of such blocks on a very limited scale, and they came into limited but significant use during World War I. Shortly after the war, Henry Ford recognized the importance of having such gage blocks generally available. He arranged for Johansson to come to the United States, and through facilities provided by the Ford Motor Company, methods were devised for the large-scale production of gage block sets. Today, gage block sets of excellent quality are produced by a number of companies in this country and abroad.

Steel gage blocks are made of alloy steel, hardened to R_c65 and carefully heat treated (*seasoned*) to relieve internal stresses and to minimize subsequent dimensional change. Carbide gage blocks provide extra wear resistance. The measuring surfaces of each block are surface-ground to approximately the required dimension and are then lapped and mirror polished to bring the block to the final dimension and to produce a very flat and smooth surface finish, 0.4 millionths of an inch (0.01 μm). (Surface finish is discussed in Chapter 36.)

Gage blocks are commonly made in grades with various tolerances as given in Table 10-3, which shows grade block grades according to NBS Standard No. 731/222 131 (ANSI/ASME B89.1OM-1984). Blocks up to 1 in. in length have absolute accuracies as stated, whereas the tolerances are per inch of length for blocks larger than 1 in. Some companies supply blocks in AA quality (which corresponds to Grade 1) and in A+ quality (which corresponds to Grade 2).

TABLE 10-2 Metric–English Conversions

Measurement	Metric Symbol	Metric Unit	English Conversion
Linear dimensions	m	meter	1 in. = 0.0254 m[a]
			1 ft = 0.348 m[a]
	cm	centimeter	1 in. = 2.54 cm[a]
	mm	millimeter	1 in. = 25.4 mm[a]
	μm	micrometer	1 μin. = 0.0254 μm[a]
Area	m^2	square meter	1 ft^2 = 0.093 m^2[b]
	cm^2	square centimeter	1 in.^{2} = 6.45 cm^2[b]
	mm^2	square millimeter	1 in.^{2} = 645.16 mm^2[a]
Volume and capacity	m^3	cubic meter	1 ft^3 = 0.028 m^3[c]
	cm^3	cubic centimeter	1 in.^{3} = 16.39 cm^3
	mm^3	cubic millimeter	1 in.^{3} = 16.387.06 mm^3[b]
	L	liter	1 ft^3 = 28.32 L[c]
			1 U.S. gal = 3.79 L[c]
Velocity, acceleration, and flow	m/s	meters per second	1 ft/s = 0.3048 m/s[a]
	m/min	meters per minute	1 ft/min = 0.3048 m/mm[a]
	m/s^2	meters per second squared	1 in./s^2 = 0.0254 m/s^2[c]
	L/mm	liters per minute	1 ft^3/min = 28.3 l/min[c] and
			1 gallon (U.S. liquid)/min = 3.785 l/min[c]
Mass	g	gram	1 oz = 28.36 g[c]
	kg	kilogram	1 lb = 0.45 kg[c]
	t	metric ton	1 short ton (2000 lb) = 0.7072t[d]
Force	N	newton	1 lb-force = 4.448 N[c]
	kN	kilonewton	1 short ton-force (2000 lb) = 8.896 kN[c]
Bending moment or torque	N · m	newton-meter	1 oz-force/in. = 0.007 N. m[c]
			1 lb-force/in. = 0.113 N. m[c]
			1 lb-force/ft = 1.3558 N. m[c]
Pressure	Pa	pascal	1 lb/ft^2 = 47.88 Pa[c]
	kPa	kilopascal	1 lb/in.^{2} = 6.895 kPa[c]
Energy, work, or quantity of heat	J	joule	1 Btu[d] = 1055.056[c]
	kJ	kilojoule	1 Btu[d] = 1.055 kJ[c]
Power	W	watt 1	1 hp (550 ft-lb/s) = 745.7 W[c]
			1 hp (electric) = 746 W[a]
	kW	kilowatt	1 hp (550 ft-lb/s) = 0.7457 kW[b]
Temperature	C	Celsius	degrees C = $\frac{\text{degrees F} - 32}{1.8}$
Frequency	Hz	hertz	1 cycle per second = 1 Hz
	kHz	kilohertz	1000 cycles per second = 1 kHz
	MHz	megahertz	1,000,000 cycles per second = 1 MHz

[a] Comments on the metric system:

Metric symbols are usually presented the same way in singular and in plural (1 mm, 100 mm), and periods are not used after symbols, except at the end of sentences. Degree (instead of radian) continues to be used for plane angles, but angles are expressed with decimal subdivisions rather than minutes and seconds. Surface finishes are specified in micrometres.

Accuracy of conversion. Multiplying an English measurement by an exact metric conversion factor often provides an accuracy not intended by the original value. In general, use one less significant digit to the right of the decimal point than was given in the original value; 0.032 in., (0.81) in., (0.008 mm), etc. Fractions of an inch are converted to the nearest tenth of a millimeter: $\frac{1}{8}$ in. (3.2 mm).

Weight, mass, and force. Confusion exists in the use of the term *weight* as a quantity to mean either force or mass. In nontechnical circles, the term *weight* nearly always means mass, and this use will probably persist. Weight is a force generated by mass under the influence of gravity. Mass is expressed in gram (g), kilogram (kg), or metric ton (t) units, and force in newton (N) or kilonewton (kN) units.

Pressure. Kilopascal (kPa) is the recommended unit for fluid pressure. Absolute pressure is specified either by using the identifying phrase *absolute pressure* or by adding the word *absolute* after the unit symbol, separating the two by a comma or a space.

[b] Exact. [c] Approximate. [d] International Table.

TABLE 10-3 Grade Block Grades According to NBS Standard No. 731/222 131 (ANSI/ASME B89.1OM-1984)

Grade		Inches	Millimeters	Recalibration Period
0.5	(laboratory)	±0.000001	±0.000 03	Annually
1	(laboratory)	±0.000002	±0.000 05	Annually
2	(precision)	+0.000004 −0.000002	+0.000 10 −0.000 05	Monthly to semiannually
3	(working)	+0.000008 −0.000004	+0.000 20 −0.000 10	Monthly to quarterly

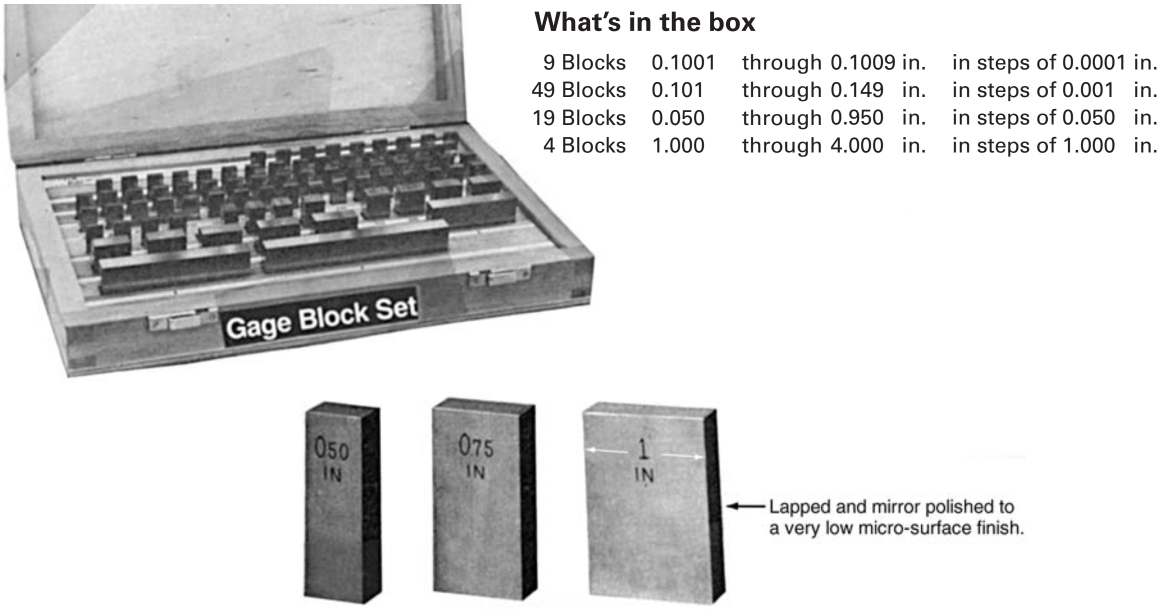

What's in the box

9 Blocks	0.1001	through 0.1009 in.	in steps of 0.0001 in.
49 Blocks	0.101	through 0.149 in.	in steps of 0.001 in.
19 Blocks	0.050	through 0.950 in.	in steps of 0.050 in.
4 Blocks	1.000	through 4.000 in.	in steps of 1.000 in.

FIGURE 10-3 Standard set of rectangular gage blocks with 0.000050-in. accuracy; three individual blocks are shown.

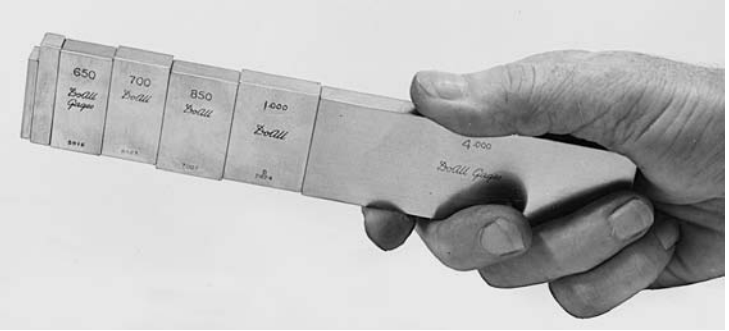

FIGURE 10-4 Seven gage blocks wrung together to build up a desired dimension. *(Courtesy of DoALL Company.)*

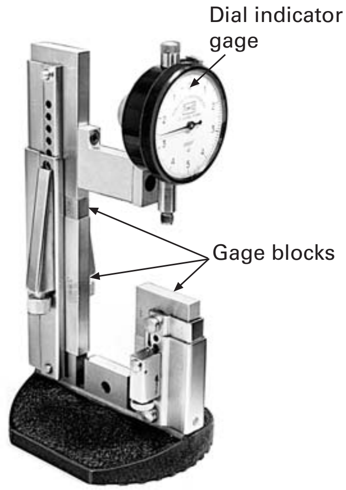

FIGURE 10-5 Wrung-together gage blocks in a special holder, used with a dial gage to form an accurate comparator. *(Courtesy of DoALL Company.)*

Grade 0.5 (grand-master) blocks are used as a basic reference standard in calibration laboratories. Grade 1 (laboratory-grade) blocks are used for checking and calibrating other grades of gage blocks. Grade 2 (precision-grade) blocks are used for checking Grade 3 blocks and master gages. Grade 3 (B or working-grade) blocks are used to calibrate or check routine measuring devices, such as micrometers, or in actual gaging operations.

The dimensions of individual blocks are established by light-beam interferometry, with which it is possible to calibrate these blocks routinely with an uncertainty as low as one part per million.

Gage blocks usually come in sets containing various numbers of blocks of various sizes, such as those shown in Figure 10-3. By "wringing the blocks together" in various combinations, as shown in Figure 10-4, any desired dimension can be obtained. For example, if the last two blocks on the stack are 0.100 and 0.05 in., what is the total length of the wrung-together stack of gage blocks?

Gage blocks are wrung together by sliding one past another using hand pressure. They will adhere to one another with considerable force and must not be left in contact for extended periods of time. Gage blocks are available in different shapes (squares, angles, rounds, and pins), so standards of high accuracy can be obtained to fill almost any need. In addition, various auxiliary clamping, scribing, and base block attachments are available that make it possible to form very accurate gaging devices, such as the setup shown in Figure 10-5.

STANDARD MEASURING TEMPERATURE

Because all the commonly used metals are affected dimensionally by temperature, a standard measuring temperature of 68°F (20°C) has been adopted for precision measuring work. All gage blocks, gages, and other precision-measuring instruments are calibrated at this temperature. Consequently, when measurements are to be made to accuracies greater than 0.0001 in. (0.0025 mm), the work should be done in a room in which the temperature is controlled at standard. Although it is true that to some extent both the workpiece and the measuring or gaging device *may* be affected to about the same extent by temperature variations, one should not rely on this. Measurements to even 0.0001 in. (0.0025 mm) should not be relied on if the temperature is very far from 68°F (20°C).

ACCURACY VERSUS PRECISION IN PROCESSES

It is vitally important that the difference between accuracy and precision be understood. *Accuracy* refers to the ability to hit what is aimed at (the bull's-eye of the target). *Precision* refers to the repeatability of the process. Suppose that five sets of five shots are fired at a target from the same gun. Figure 10-6 shows some of the possible outcomes. In Figure 10-6a, inspection of the target shows that this is a good process—accurate and precise. Figure 10-6b shows precision (repeatability) but poor accuracy. The agreement with a standard is not good. In Figure 10-6c the process is on the average quite accurate, as the X (average) is right in the middle of the bull's-eye, but the process has too much scatter or variability; it does not repeat. Finally, in Figure 10-6d, a failure to repeat accuracy between samples with respect to time is observed; the process is not stable. These four outcomes are typical but not all-inclusive of what may be observed.

In Chapter 36, more discussion on accuracy and precision is presented as they relate to process capability. This term is used to describe how well a manufacturing process performs in its part making.

In measuring instruments used in the factory, precision (or repeatability) is critical because the devices must be very repeatable as well as accurate. For manually operated instruments, the skill of the operator must also be considered—this is called reproducibility.

So accuracy, repeatability, and reproducibility are characteristics of what is called *gage capability*, which is also discussed in Chapter 36.

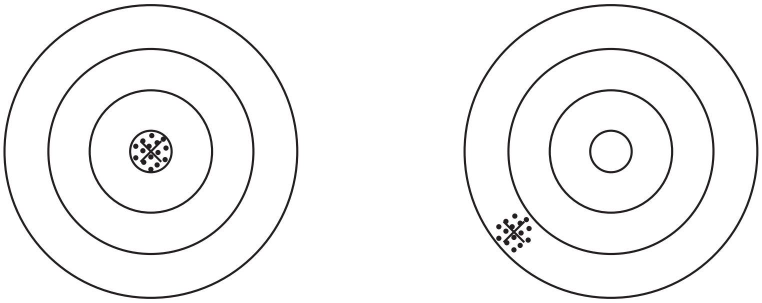

(a) Accurate and precise

(b) Precise, not accurate

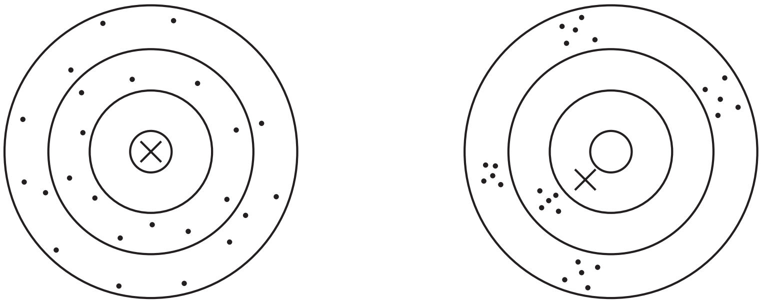

(c) Accurate, not precise

(d) Precise within sample
Not precise between samples
Not accurate overall or within sample

FIGURE 10-6 Accuracy versus precision. Dots in targets represent location of shots. Cross (×) represents the location of the average position of all shots. (a) Accurate and precise; (b) precise, not accurate; (c) accurate, not precise; (d) precise within sample, not precise between samples, not accurate overall or within sample.

10.3 ALLOWANCE AND TOLERANCE

If the desired fit between mating parts is to be obtained, the designer must specify two factors, allowance and tolerance. *Allowance* is the intentional, desired difference between the dimensions of two mating parts. It is the difference between the dimension of the largest interior-fitting part (shaft) and that of the smallest exterior-fitting part (hole). Figure 10-7 shows shaft A designed to fit into the hole in block B. This difference (0.0535–0.5025) thus determines the condition of *tightest* fit between mating parts. Allowance may be specified so that either *clearance* or *interference* exists between the mating parts. In the case of a shaft and mating hole, it is the difference in diameters of the largest shaft and the smallest hole. With clearance fits, the largest shaft is smaller than the smallest hole, whereas with interference fits, the hole is smaller than the shaft.

Tolerance is an undesirable but permissible deviation from a desired dimension. There is variation in all processes, and no part can be made *exactly* to a specified dimension, except by chance. Furthermore, such exactness is neither necessary nor economical. Consequently, it is necessary to permit the actual dimension to deviate from the desired theoretical dimension (called the *nominal*) and to control the degree of deviation so that satisfactory functioning of the mating parts will still be ensured.

Now we can see that the objective of *inspection*, by means of measurement techniques, is to provide feedback information on the actual size of the parts with reference to the size specified by the designer on the part drawing.

The manufacturing processes that make the shaft are different from those that make the hole, but both the hole and the shaft are subject to deviations in size because of variability in the processes and the materials. Thus, while the designer wishes ideally that all the shafts would be exactly 0.500 (Figure 10-8a) and all the holes 0.506, the reality of processing is that there will be deviations in size around these nominal or ideal sizes.

Most manufacturing processes result in products whose measurements of the geometrical features and sizes are distributed normally (Figure 10-8b). That is, most of the (0.0535–0.5025) measurements are clustered around the average dimension, $\overline{X}$ calculated as

$$\overline{X} = \frac{\sum_{i1}^{n} X_i}{n} \quad \text{for } n \text{ items} \tag{10-1}$$

$\overline{X}$ will be equal to the nominal dimension only if the process is 100% accurate, that is, perfectly centered. More likely, parts will be distributed on either side of the average, and the process might be described (modeled) with a normal distribution. In normal distributions, as shown in Figure 10-8c, 99.73% of the measurements (X_i) will fall within plus or minus 3 standard deviations ($\pm 3\sigma$) of the mean, 95.46% will be within $\pm 2\sigma$, and 68.26% will be within $\pm 1\sigma$ where

$$\sigma = \sqrt{\frac{\sum_{i=1}^{n} (X_i - \overline{X})^2}{n}} \tag{10-2}$$

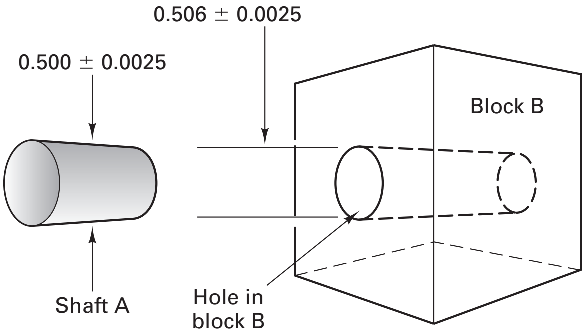

FIGURE 10-7 When mating parts are designed, each shaft must be smaller than each hole for a clearance fit.

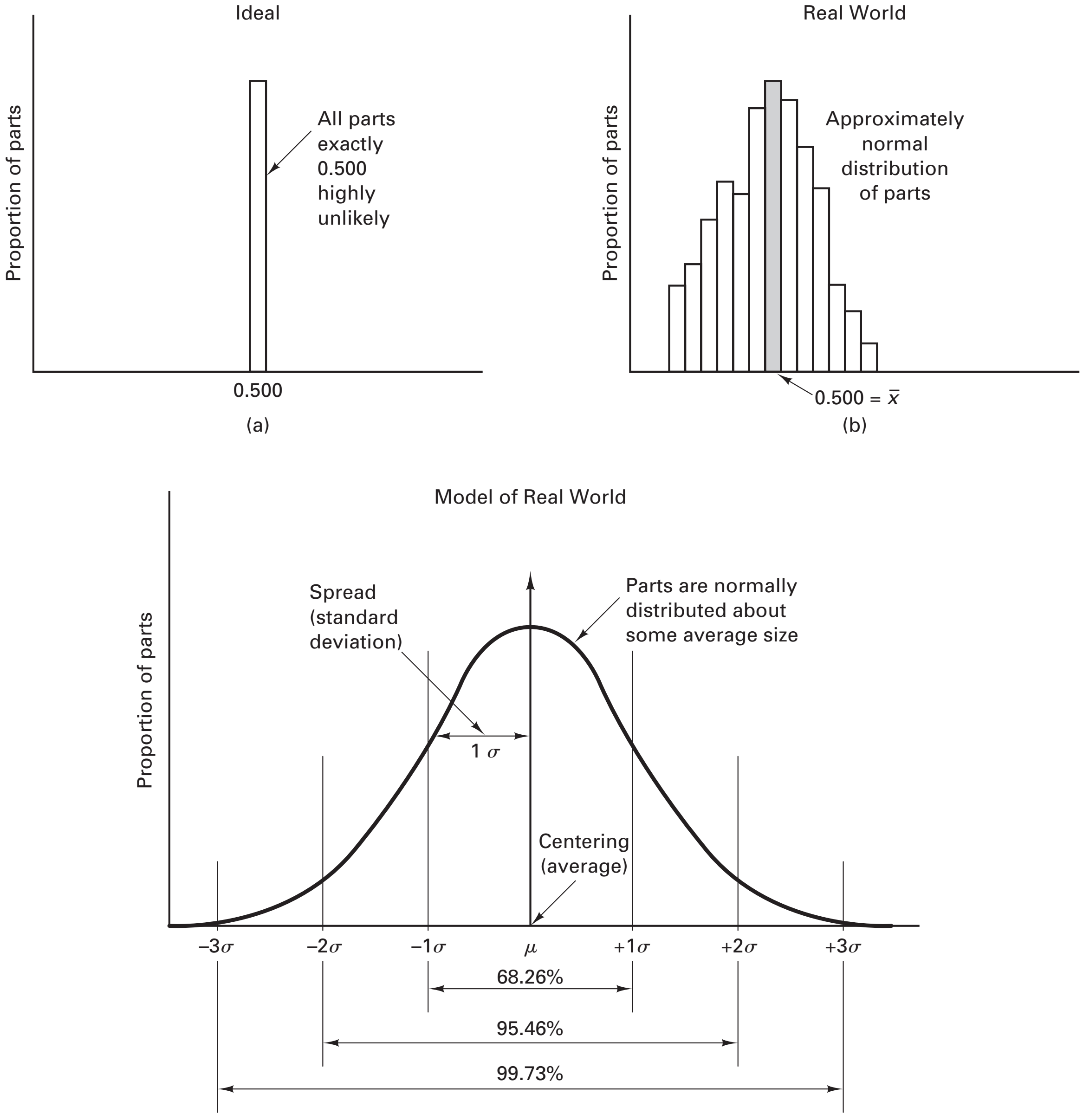

(a)

(b)

(c)

FIGURE 10-8 (a) In the ideal situation, the process would make all parts exactly the same size. (b) In the real world of manufacturing, parts have variability in size. (c) The distribution of sizes can often be modeled with a normal distribution.

In summary, the designer applies nominal values to the mating parts according to the desired fit between the parts. Tolerances are added to those nominal values in recognition of the fact that all processes have some natural amount of variability.

Assume that the data for both the hole and the shaft are normally distributed. The $\pm 3\sigma$ added to the mean (μ) gives the *upper and lower natural tolerance limits*, defined as

$$\mu + 3\sigma = UNTL$$
$$\mu - 3\sigma = LNTL$$

As shown in Figure 10-9a, the average fit of two mating parts is equal to the difference between the mean of the shaft distribution and the mean of the hole distribution. The *range of fit* would be the difference between the minimum diameter shaft and the maximum diameter hole. The minimum *clearance* would be the difference between the

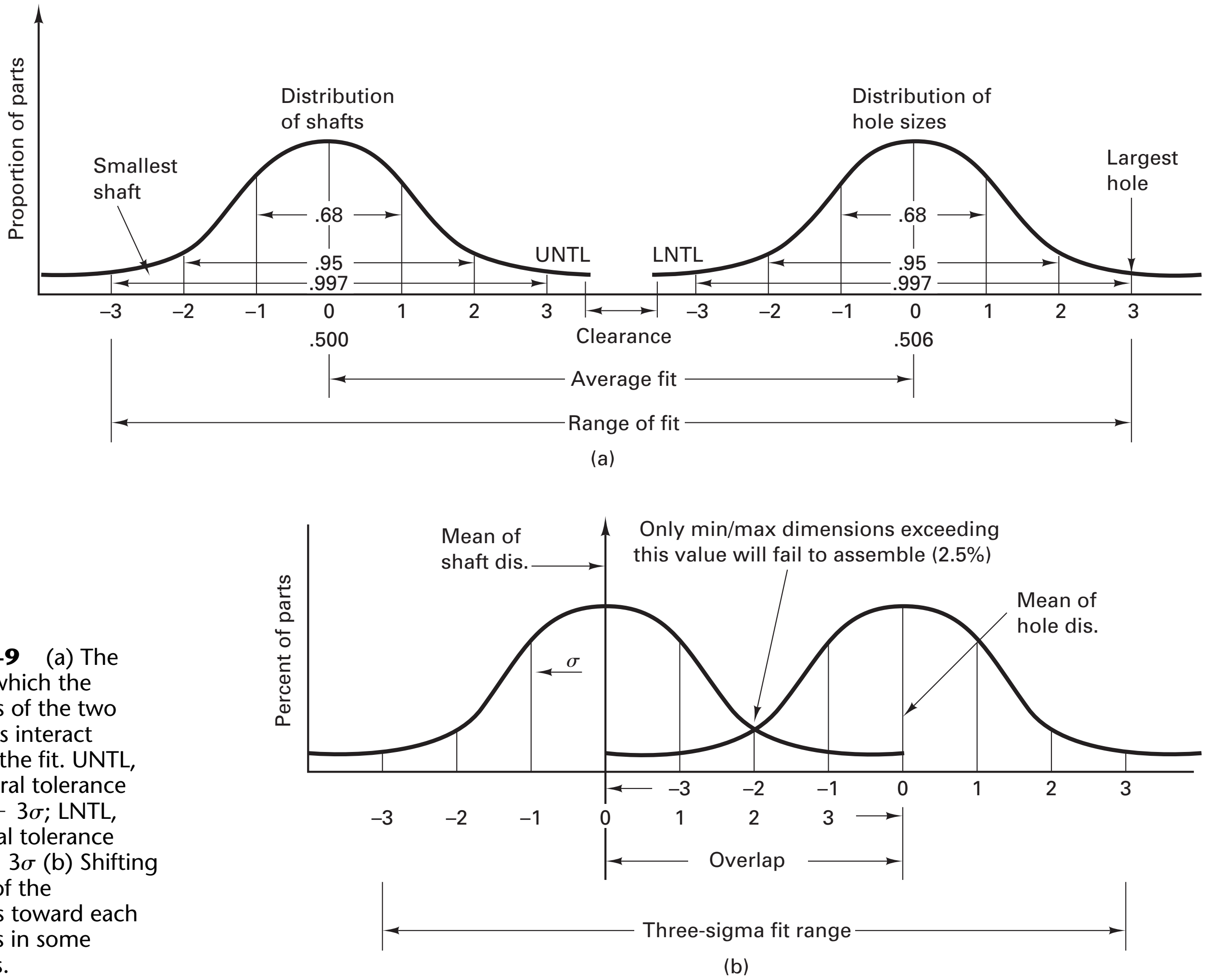

FIGURE 10-9 (a) The manner in which the distributions of the two mating parts interact determines the fit. UNTL, (upper natural tolerance limit) = $\mu + 3\sigma$; LNTL, lower natural tolerance limit = $\mu - 3\sigma$ (b) Shifting the means of the distributions toward each other results in some interface fits.

smallest hole and the largest shaft. The tighter the distributions (i.e., the more precise the process), the better the fit between the parts.

During machining processes, the cutting tools wear and change size. If tool wear is considered, the diameter of the shaft will tend to get larger as the tool wears. However, the diameter of the hole in block B of Figure 10-7 decreases in size with tool wear. If no corrective action is taken, the means of the distributions will drift toward each other, and the fit will become increasingly tight (the clearance will be decreased). If the hole and the shaft distributions overlap by 2 standard deviations, as shown in Figure 10-9b, 6 parts out of every 10,000 could not be assembled. As the shaft and the hole distributions move closer together, more interference between parts will occur, and the fit will become tighter, eventually becoming an interference fit.

The designer must specify the tolerances according to the function of the mating parts. Suppose that the mating parts are the cap and the body of an ink pen. The cap must fit snugly but must be able to be easily removed by hand. A snug fit would be too tight for a dead bolt in a door lock. A snug fit is also too tight for a high-speed bearing for rotational parts but is not tight enough for permanently mounting a wheel on an axle. In the next section, the manner in which tolerances and allowances are specified will be introduced, but design engineers are expected to have a deeper understanding of this topic.

SPECIFYING TOLERANCE AND ALLOWANCES

Tolerance can be specified in four ways: bilateral, unilateral, limits, and geometrically. *Bilateral* tolerance is specified as a plus or minus deviation from the nominal size, such as 2.000 ± 0.002 in. More modern practice uses the *unilateral* system, where the deviation is in one direction from the basic size, such as

$$50.8\ \text{mm}\ {}^{+0.1\ \text{mm}}_{-0.0\ \text{mm}} \quad \text{or} \quad 2.000\ \text{in.}\ {}^{+0.004\ \text{in.}}_{-0.000\ \text{in.}} \quad \text{in metric}$$

In the first case, that of bilateral tolerance, the dimension of the part could vary between 1.998 and 2.002 in., a total tolerance of 0.004 in. For the example of unilateral tolerance, the dimension could vary between 2.000 and 2.004 in., again a tolerance of 0.004 in. Obviously, to obtain the same maximum and minimum dimensions with the two systems, different basic sizes must be used. The maximum and minimum dimensions that result from application of the designated tolerance are called *limit dimensions*, or *limits*. (*Geometric* tolerances are discussed in the next section.)

There can be no rigid rules for the amount of clearance that should be provided between mating parts; the decision must be made by the designer, who considers how the parts are to function. The American National Standards Institute, Inc. (ANSI) has established eight classes of fits that serve as a useful guide in specifying the allowance and tolerance for typical applications and that permit the amount of allowance and tolerance to be determined merely by specifying a particular class of fit. These classes are as follows:

Class 1: *Loose fit:* large allowance. Accuracy is not essential.
Class 2: *Free fit:* liberal allowance. For running fits where speeds are above 600 rpm and pressures are 4.1 MPa (600 psi) or above.
Class 3: *Medium fit:* medium allowance. For running fits under 600 RPM and pressures less than 4.1 MPa (600 psi) and for sliding fits.
Class 4: *Snug fit:* zero allowance. No movement under load is intended, and no shaking is wanted. This is the tightest fit that can be assembled by hand.
Class 5: *Wringing fit:* zero to negative allowance. Assemblies are selective and not interchangeable.
Class 6: *Tight fit:* slight negative allowance. An interference fit for parts that must not come apart in service and are not to be disassembled or are to be disassembled only seldomly. Light pressure is required for assembly. Not to be used to withstand other than very light loads.
Class 7: *Medium force fit:* an interference fit requiring considerable pressure to assemble; ordinarily assembled by heating the external member or cooling the internal member to provide expansion or shrinkage. Used for fastening wheels, crank disks, and the like to shafting. The tightest fit that should be used on cast iron external members.
Class 8: *Heavy force and shrink fits:* considerable negative allowance. Used for permanent shrink fits on steel members.

The allowances and tolerances that are associated with the ANSI classes of fits are determined according to the theoretical relationship shown in Table 10-4. The actual resulting dimensional values for a wide range of basic sizes can be found in tabulations in drafting and machine design books.

TABLE 10-4 ANSI Recommended Allowances and Tolerances

Class of Fit	Allowance	Average Interference	Hole Tolerance	Shaft Tolerance
1	$0.0025\sqrt[3]{d^2}$	—	$+0.0025\sqrt[3]{d}$	$-0.0025\sqrt[3]{d}$
2	$0.0014\sqrt[3]{d^2}$	—	$+0.0013\sqrt[3]{d}$	$-0.0013\sqrt[3]{d}$
3	$0.0009\sqrt[3]{d^2}$	—	$+0.0008\sqrt[3]{d}$	$-0.0008\sqrt[3]{d}$
4	0	—	$+0.0006\sqrt[3]{d}$	$-0.0004\sqrt[3]{d}$
5	—	0	$+0.0006\sqrt[3]{d}$	$+0.0004\sqrt[3]{d}$
6	—	$0.00025d$	$+0.0006\sqrt[3]{d}$	$+0.0006\sqrt[3]{d}$
7	—	$0.0005d$	$+0.0006\sqrt[3]{d}$	$+0.0006\sqrt[3]{d}$
8	—	$0.001d$	$+0.0006\sqrt[3]{d}$	$+0.0006\sqrt[3]{d}$

In the ANSI system, the hole size is always considered basic, because the majority of holes are produced through the use of standard-size drills and reamers. The internal member, the shaft, can be made to any one dimension as readily as to another. The allowance and tolerances are applied to the basic hole size to determine the limit dimensions of the mating parts. For example, for a basic hole size of 2 in. and a Class 3 fit, the dimensions would be:

Allowance	0.0014 in.
Tolerance	0.0010 in.
Hole	
Maximum	2.0010 in.
Minimum	2.0000 in.
Shaft	
Maximum	1.9986 in.
Minimum	1.9976 in.

It should be noted that for both clearance and interference fits, the permissible tolerances tend to result in a looser fit.

The *ISO System of Limits and Fits* (Figure 10-10a) is widely used in a number of leading metric countries. This system is considerably more complex than the ANSI system just discussed. In this system each part has a *basic size*. Each limit of size of a part, high and low, is defined by its *deviation* from the basic size, the magnitude and sign being obtained by subtracting the basic size from the limit in question. The difference between the two limits of size of a part is called *tolerance*, an absolute amount without sign.

There are three classes of fits: (1) *clearance fits*, (2) *transition fits* (the assembly may have either clearance or interference), and (3) *interference fits*. Either a *shaft*- or *hole-basis system* may be used (Figure 10-10b). For any given basic size, a range of tolerances and deviations may be specified with respect to the line of zero deviation, called the *zero line*. The tolerance is a function of the basic size and is designated by a number symbol, called the *grade* (e.g., the *tolerance grade*). The *position* of the tolerance with respect to the zero line, also a function of the basic size, is indicated by a letter symbol (or two letters)—a capital letter for holes and a lowercase letter for shafts—as illustrated in Figure 10-10c.[1] Thus the specification for a hole and a shaft having a basic size of 45 mm might be 45 H8/g7.

Eighteen standard grades of tolerances are provided, called IT 01, IT 0, and IT 1 through IT 16, providing numerical values for each nominal diameter, in arbitrary steps up to 500 mm (i.e., 0-3, 3-6, 6-10, . . . , 400-500 mm). The valve of the tolerance unit, *i*, for grades 5–16 would be

$$i = 0.45\sqrt{D} + 0.001\,D$$

where i is in micrometers and D in millimeters.

Standard shaft and hole deviations are provided by similar sets of formulas. However, for practical application, both tolerances and deviations are provided in three sets of rather complex tables. Additional tables give the values for basic sizes above 500 mm and for "commonly used shafts and holes" in two categories: "general purpose" and "fine mechanisms and horology" (horology is the art of making timepieces).

GEOMETRIC TOLERANCES

Geometric tolerances state the maximum allowable deviation of a form or a position from the perfect geometry implied by a drawing. These tolerances specify the diameter or the width of a tolerance zone necessary for a part to meet its required accuracy.

---

[1] It will be recognized that the "position" in the ISO system essentially provides the "allowance" of the ANSI system.

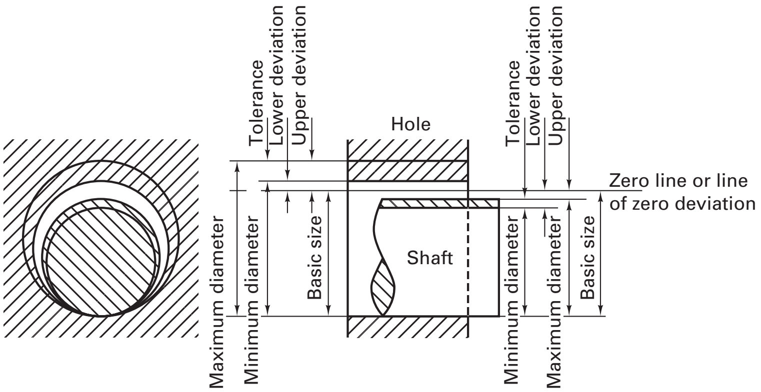

(a) Basic size, deviation and tolerance in the ISO system.

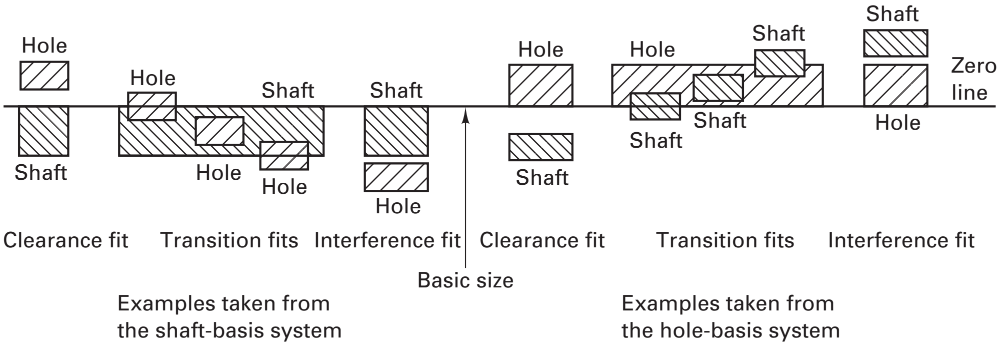

(b) Shaft-basis and hole-basis system for specifying fits in the ISO system.

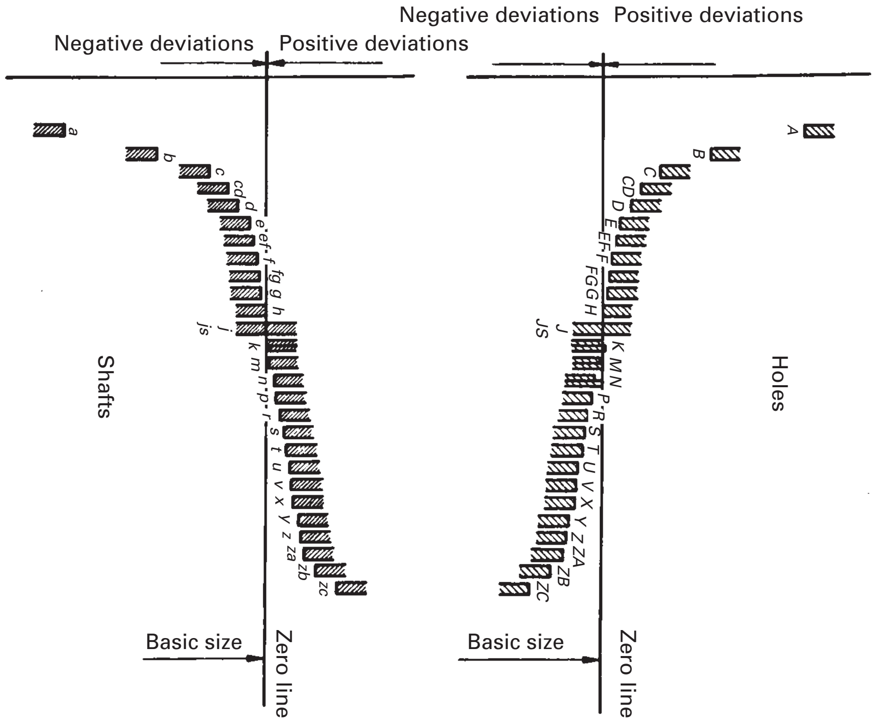

(c) Position of the various tolerance zones for a given diameter in the ISO system.

FIGURE 10-10 The ISO System of Limits and Fits. *(By permission from Recommendations R286-1962,* System of Limits and Fits*, copyright 1962, American Standards Institute, NJ.)*

	Tolerance	Characteristic	Symbol
Individual features	Form	Straightness	—
		Flatness	▱
		Circularity	○
		Cylindricity	/○/
Individual or related features	Profile	Line	⌒
		Surface	⌓
Related features	Orientation	Angularity	∠
		Perpendicularity	⊥
		Parallelism	//
	Location	Position	⌖
		Concentricity	◎
	Runout	Circular runout	↗
		Total runout	⌰

Notes	⌀ DIA	Ⓜ MMC	Ⓛ LMC	Ⓢ RFS

(a)

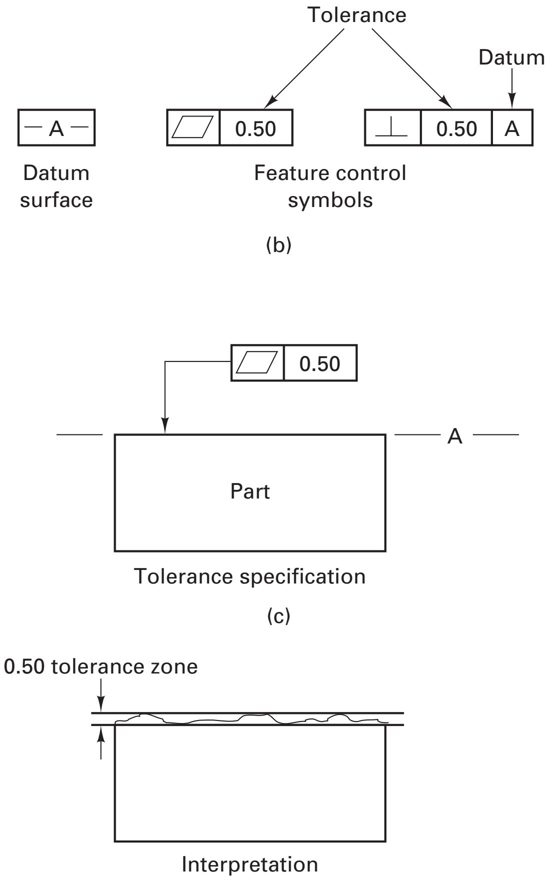

(b)

Tolerance specification

(c)

Interpretation

(d)

FIGURE 10-11 (a) Geometric tolerancing symbols; (b) feature control symbols for part drawings; (c) how a geometric tolerance for flatness is specified; (d) what the specification means.

Figure 10-11 shows the various symbols used to specify the required geometric characteristics of dimensioned drawings. A modifier is used to specify the limits of size of a part when applying geometric tolerances. The *maximum material condition* (MMC) indicates that a part is made with the largest amount of material allowable (e.g., a hole at its smallest permitted diameter or a shaft at its largest permitted diameter). The least material condition (LMC) is the converse of the maximum material condition. *Regardless of feature size* (RFS) indicates that tolerances apply to a geometric feature for any size it may be. Many geometric tolerances or *feature control symbols* are stated with respect to a particular datum or reference surface. Up to three datum surfaces can be given to specify a tolerance. Datum surfaces are generally designated by a letter symbol.

Figure 10-11b gives examples of the symbols used for datum planes and feature control symbols.

There are four tolerances that specify the permitted variability of forms: *flatnesss, straightness, roundness*, and *cylindricity*. Form tolerances describe how an actual feature may vary from a geometrically ideal feature.

The surface of a part is ideally flat if all its elements are coplanar. The *flatness* specification describes the tolerance zone formed by two parallel planes that bound all the elements on a surface. A 0.5-mm tolerance zone is described by the feature control symbol in Figure 10-11c. The distance between the highest point on the surface to the lowest point on the surface may not be greater than 0.5 mm, as shown in Figure 10-11d.

In Section 10.7, on coordinate measuring machines, additional examples of geometric tolerances can be found.

10.4 INSPECTION METHODS FOR MEASUREMENT

The field of *metrology*, even limited to geometrical or dimensional measurements, is far too large to cover here. This chapter concentrates on basic linear measurements and the measurement and testing devices most commonly found in a company's metrology or quality control facility. At a minimum, such labs would typically contain optical flats: one or two granite measuring tables; an assortment of indicators, calipers, micrometers, and height gages; an optical comparator; a set or two of Grade 1 gage blocks; a coordinate measuring machine; a laser scanning device; a laser interferometer; a toolmaker's microscope; and pieces of equipment specially designed to inspect and test the company's products.

Table 10-5 provides a summary of inspection methods, listing five basic kinds of devices: air, light optical and electron optical, electronic, and mechanical. The variety seems to be endless, but digital electronic readouts connected to any of the measuring devices are becoming the preferred method.

The discrete digital readout on a clear liquid-crystal display (LCD) eliminates reading interpretations associated with analog scales and can be entered directly into dedicated microprocessors or computers for permanent recording and analysis. The added speed and ease of use for this type of equipment have allowed it to be routinely used on the plant floor instead of in the metrology lab. In summary, the trend toward tighter tolerances (greater precision) and accuracy associated with the need for superior quality and reliability has greatly enhanced the need for improved measurement methods.

TABLE 10-5 Five Basic Kinds of Inspection Method

Method	Typical Accuracy	Major Applications	Comments
Air	0.5–10 μin. or 2 to 3% of scale range	Gaging holes and shafts using a calibrated difference in air pressure or airflow, with magnifications of 20,000–40,000 to 1; also used for machine control, sorting, and classifying.	High precision and flexibility; can measure out-of-round, taper, concentricity, camber, squareness, parallelism, and clearance between mating parts; noncontact principle good for delicate parts.
Optical light energy	0.2–2 μin. or better with laser interferometry 0.5–1 second of arc in autocollimation optical comparators	Interferometry; checking flatness and size of gage blocks; finding surface flaws; measuring spherical shapes, flatness of surface plates, accuracy of rotary index tables; includes all light microscopes and devices common on plant floor	Largest variety of measuring equipment; autocollimators are used for making precision angular measurements; lasers are used to make precision in-process measurements; laser scanning.
Optical electron energy	100 Å	Precision measurement in scanning electron microscopes of microelectronic circuits and other small precision parts.	Part size restricted by vacuum chamber size; electron beam can be used for processing and part testing of electronic circuits.
Electronics	0.5–10 μin.	Widely used for machine control, on-line inspection, sorting, and classification; ODs, IDs, height, surface, and geometrical relationships, profile tracing for roundness, surface roughness, contours, etc.; most devices are comparators with movement of stylus or spindle producing an electronic signal that is amplified electronically; commonly connected to microprocessors and minicomputers for process adjustment.	Electronic gages come in many forms but usually have a sensory head or detector combined with an amplifier; capable of high magnification with resolution limited by size or geometry for sensory head; readouts commonly have multiple magnification steps; solid-state digital electronics make these devices small, portable, stable, and extremely flexible, with extremely fast response time.
Mechanical	1–10 μin.	Large variety of external and internal measurements using dial indicators, micrometers, calipers, and the like; commonly used for bench comparators for gage calibration work.	Moderate cost and ease of use make many of these devices and workhorses of the shop floor; highly dependent on workers' skills and often subject to problems of linkages.

FACTORS IN SELECTING INSPECTION EQUIPMENT

Many inspection devices use electronic output to communicate directly to microprocessors. Inspection devices are being built into the processes themselves and are often computer-aided. In-process inspection generates feedback sensory data from the process or its output to the computer control of the machine, which is the first step in making the processes responsive to changes (adaptive control). In addition to in-process inspection, many other quality checks and measurements of parts and assemblies are needed. In general, six factors should be considered when selecting equipment for an inspection job by measurement techniques.

1. *Gage capability*. The measurement device (or working gage) should be 10 times more precise than the tolerance to be measured. This is known on the factory floor as "the rule of 10." The rule actually applies to all stages in the inspection sequence, as shown in Figure 10-12. The master gage should be 10 times more precise than that of the inspection device. The reference standard used to check the master gage should be 10 times more precise than the master gage. The application of the rule greatly reduces the probability of rejecting good parts or accepting bad components and performing additional work on them. Additional discussion of gage capability is found in Chapter 36.
2. *Linearity*. This factor refers to the calibration accuracy of the device over its full working range. Is it linear? What is its degree of nonlinearity? Where does it become nonlinear, and what, therefore, is its real linear working region?
3. *Repeat accuracy*. How repeatable is the device in taking the same reading over and over on a given standard?
4. *Stability*. How well does this device retain its calibration over a period of time? Stability is also called *drift*. As devices become more accurate, they often lose stability and become more sensitive to small changes in temperature and humidity.
5. *Magnification*. This refers to the amplification of the output portion of the device over the actual input dimension. The more accurate the device, the greater must be its magnification factor, so that the required measurement can be read out (or observed) and compared with the desired standard. Magnification is often confused with resolution, but they are not the same thing.
6. *Resolution*. This is sometimes called *sensitivity* and refers to the smallest unit of scale or dimensional input that the device can detect or distinguish. The greater the resolution of the device, the smaller will be the things it can detect or identify (resolve) and the greater will be the magnification required to expand these measurements up to the point where they can be observed by the naked eye.

Some other factors of importance in selecting inspection devices include the type of measurement information desired; the range or the span of sizes the device can handle versus the size and geometry of the workpieces; the environment; the cost of the

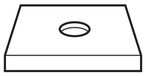 Tolerance needed on part ± 0.001 on hole diameter	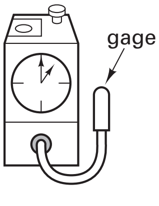 Precision needed on gage ± 0.0001 in.	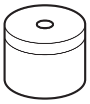 To check and set the air gage, needs to be ± 0.00001 in.	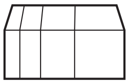 In the manufacture of the master gage, a standard of precision of at least ± 0.000001 in. is needed
Workpiece	Air gage or working gage	Master gage	Reference end standard

FIGURE 10-12 The rule of 10 states that for reliable measurements each successive step in the inspection sequence should have 10 times the *precision* of the preceding step.

device; and the cost of installing, training, and using the device. The last factor depends on the speed of measurement, the degree to which the system can be automated, and the functional life of the device in service.

■ 10.5 MEASURING INSTRUMENTS

Because of the great importance of measuring in manufacturing, a great variety of instruments are available that permit measurements to be made routinely, ranging in accuracy from $\frac{1}{64}$ to 0.00001 in. and from 0.5 to 0.0003 mm. Machine-mounted measuring devices (probes and lasers) for automatically inspecting the workpiece during manufacturing are beginning to compete with post-process gaging and inspection, in which the part is inspected, automatically or manually, after it has come off the machine. In-process inspection for automatic size control has been used for some years in grinding to compensate for the relatively rapid wear of the grinding wheel. Touch trigger probes, with built-in automatic measuring systems, are being used on CNC machine tools to determine cutting tool offsets and compensations for tool wear. These systems are discussed in Chapter 26.

For manually operated analog instruments, the ease of use, precision, and accuracy of measurements can be affected by (1) the least count of the subdivisions on the instrument, (2) line matching, and (3) the parallax in reading the instrument. Elastic deformation of the instrument and workpiece and temperature effects must be considered. Some instruments are more subject to these factors than others. In addition, the skill of the person making the measurements is very important. Digital readout devices in measuring instruments lessen or eliminate the effect of most of these factors, simplify many measuring problems, and lessen the chance of making a math error.

LINEAR MEASURING INSTRUMENTS

Linear measuring instruments are of two types: direct reading and indirect reading. *Direct-reading instruments* contain a line-graduated scale so that the size of the object being measured can be read directly on this scale. *Indirect-reading instruments* do not contain line graduations and are used to transfer the size of the dimension being measured to a direct-reading scale, thus obtaining the desired size information indirectly.

The simplest and most common direct-reading linear measuring instrument is the *machinist's rule*, shown in Figure 10-13. Metric rules usually have two sets of line graduations on each side, with divisions of $\frac{1}{2}$ and 1 mm; English rules have four sets, with divisions of $\frac{1}{16}$, $\frac{1}{32}$, $\frac{1}{64}$, and $\frac{1}{100}$ in. Other combinations can be obtained in each type.

The machinist's rule is an end- or line-matching device. For the desired reading to be obtained, an end and a line, or two lines, must be aligned with the extremities of the object or the distance being measured. Thus, the accuracy of the resulting reading is a

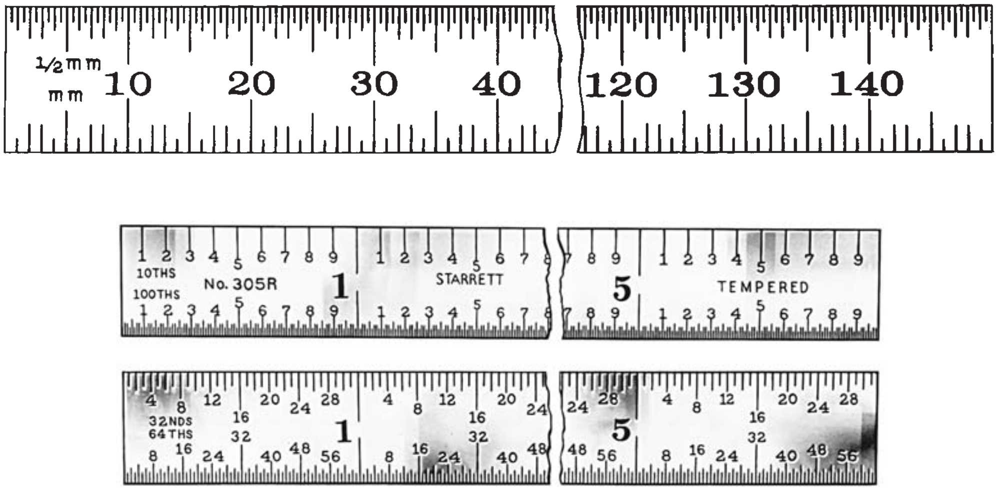

FIGURE 10-13 Machinist's rules: (a) metric and (b) inch graduations; 10ths and 100ths on one side, 32nds and 64ths on the opposite side. *(Courtesy of L.S. Starrett Company.)*

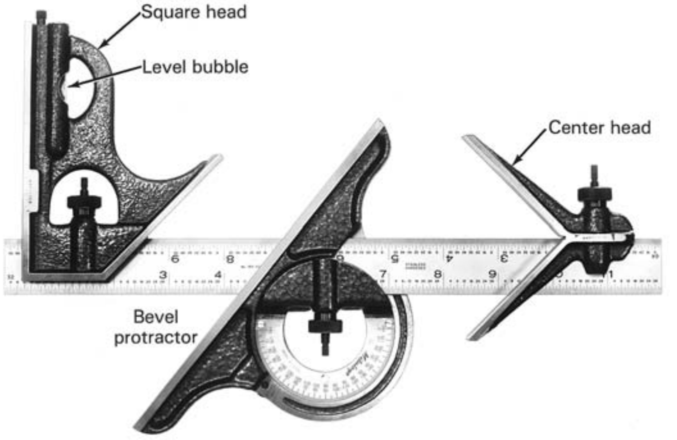

FIGURE 10-14 Combination set. *(Courtesy of MTI Corporation.)*

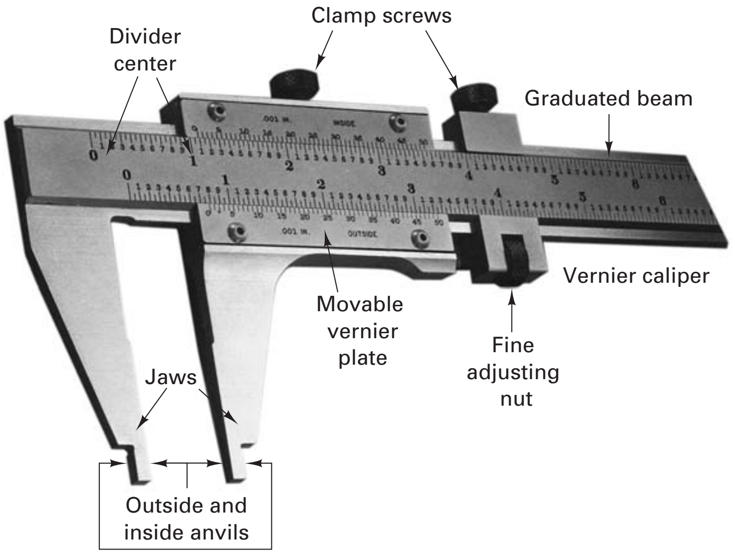

FIGURE 10-15 This vernier caliper can make measurements using both inside (for holes) and outside (shafts) anvils.

function of the alignment and the magnitude of the smallest scale division. Such scales are not ordinarily used for accuracies greater than $\frac{1}{64}$ in. (0.01 in.), or about $\frac{1}{2}$ mm.

Several attachments can be added to a machinist's rule to extend its usefulness. The *square head* (Figure 10-14) can be used as a miter or tri-square or to hold the rule in an upright position on a flat surface for making height measurements. It also contains a small bubble-type level so that it can be used by itself as a level. The *bevel protractor* permits the measurement or layout of angles. The *center head* permits the center of cylindrical work to be determined.

The *vernier caliper* (Figure 10-15) is an end-measuring instrument, available in various sizes, that can be used to make both outside and inside measurements to theoretical accuracies of 0.01 mm or 0.001 in. End-measuring instruments are more accurate and somewhat easier to use than line-matching types because their jaws are placed against either end of the object being measured, so any difficulty in aligning edges or lines is avoided. However, the difficulty remains in obtaining uniform contact pressure, or "feel," between the legs of the instrument and the object being measured.

A major feature of the vernier caliper is the auxiliary scale (Figure 10-16). The caliper shown has a graduated beam with a metric scale on the top, a metric vernier plate, and an English scale on the bottom with an English vernier. The manner in which readings are made is explained in the figure.

Figure 10-17 also shows a vernier depth gage for measuring the depth of holes or the length of shoulders on parts and a vernier height gage for rmaking height measurements. Figure 10-18 shows calipers that have a dial indicator or a digital readout that replace the vernier. The latter two calipers are capable of making inside and outside measurements as well as depth measurements.

The *micrometer caliper*, more commonly called a *micrometer*, is one of the most widely used measuring devices. Until recently, the type shown in Figure 10-19 was virtually standard. It consists of a fixed anvil and a movable spindle. When the thimble is rotated on the end of the caliper, the spindle is moved away from the anvil by means of an accurate screw thread. On English types, this thread has a lead of 0.025 in., and one revolution of the thimble moves the spindle this distance. The barrel, or sleeve, is calibrated in 0.025-in. divisions, with each $\frac{1}{10}$ of an inch being numbered. The circumference at the edge of the thimble is graduated into 25 divisions, each representing 0.001 in.

A major difficulty with this type of micrometer is making the reading of the dimension shown on the instrument. To read the instrument, the division on the thimble that coincides with the longitudinal line on the barrel is added to the largest reading exposed on the barrel.

FIGURE 10-16 Vernier caliper graduated for English and metric (direct) reading. The metric reading is 27 + 0.42 = 27.42 mm.

Refer to the upper bar graduations and metric vernier plate. Each bar graduation is 1.00 mm. Every tenth graduation is numbered in sequence—10 mm, 20 mm, 30 mm, 40 mm, etc.—over the full range of the bar. This provides for direct reading in millimeters.

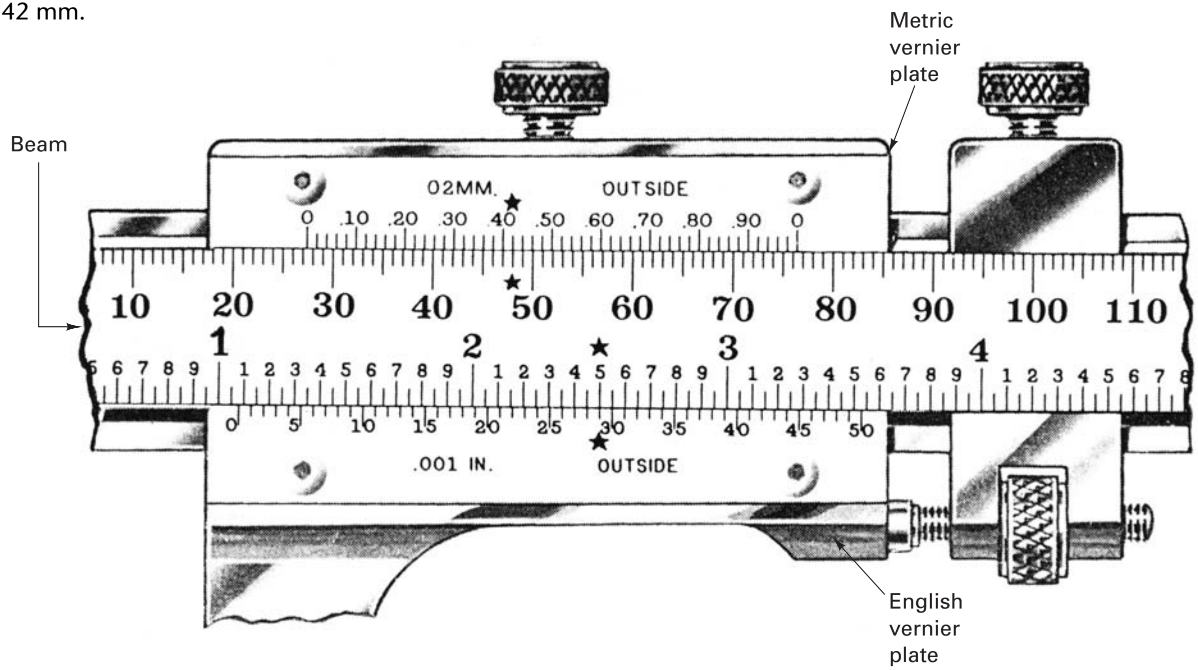

In the picture, the vernier plate zero line is one inch (1.000") plus one-twentieth (0.50") beyond the zero line on the bar, or 1.050". The 29th graduation on the vernier plate coincides with a line on the bar (as indicated by stars). 29 × 0.001 (.029") is therefore added to the 1.050" bar reading, and the total is 1.079".

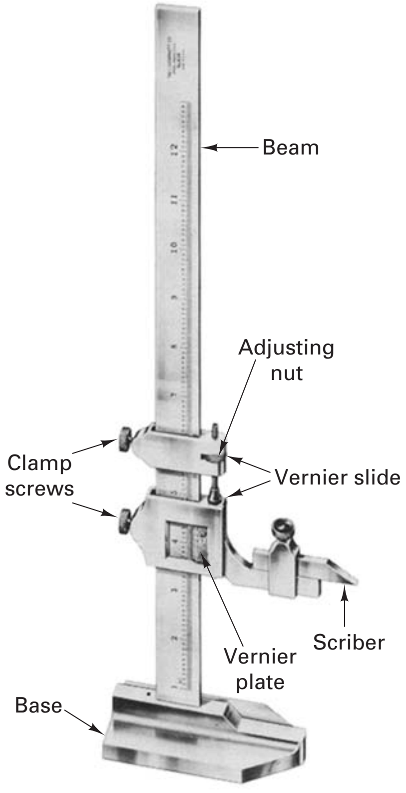

Vernier height gage

FIGURE 10-17 Variations in the vernier caliper design result in other basic gages.

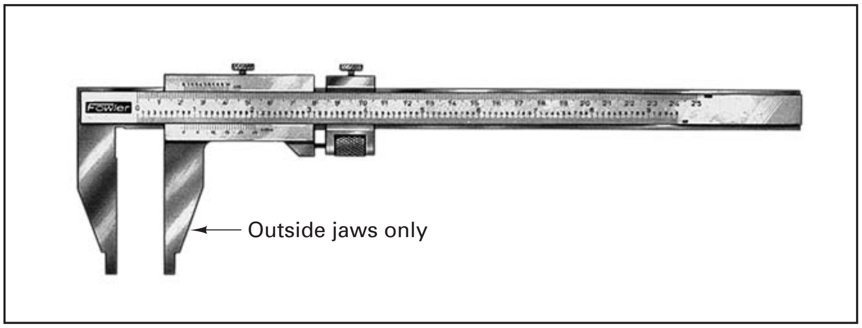

Vernier caliper with inch or metric scales and 0.001-in. accuracy

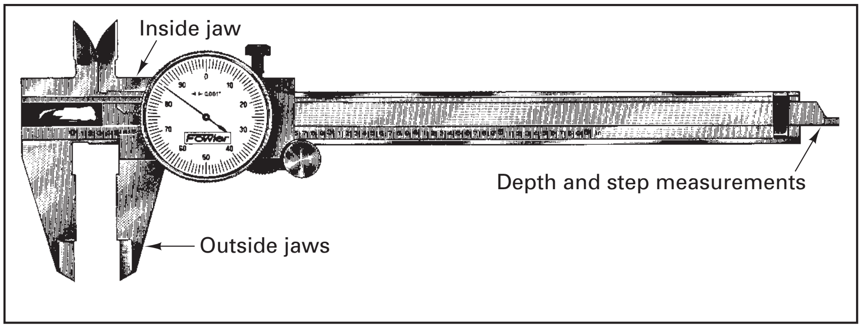

Dial caliper with 0.001-in. accuracy

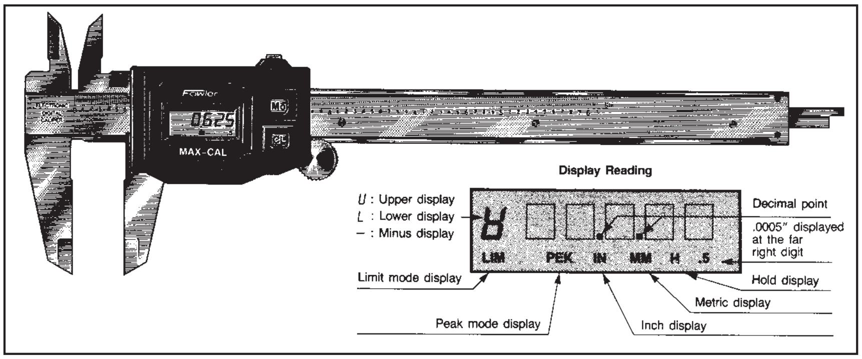

Digital electronic caliper with 0.001-in. (0.03-mm) accuracy and 0.0001-in. resolution with inch/metric conversion.

FIGURE 10-18 Three styles of calipers in common use today: (a) Vernier caliper with inch or metric scales and 0.001-in. accuracy; (b) dial caliper with 0.001-in. accuracy; (c) digital electronic caliper with 0.001-in. (0.03-mm) accuracy and 0.0001-in. resolution with inch/metric conversion.

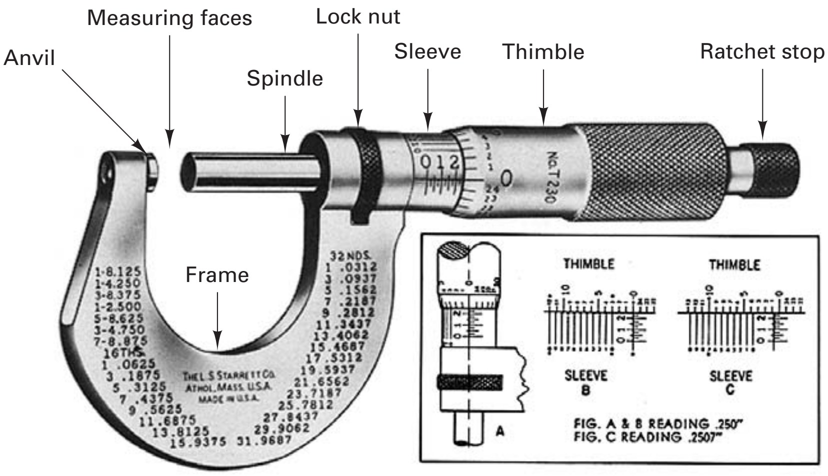

FIGURE 10-19 Micrometer caliper graduated in ten-thousandths of an inch with insets A, B, and C showing two example readings. *(Courtesy Starrett Bulletin No. 1203.)*

Micrometers graduated in ten-thousandths of an inch are the same as those graduated in thousandths, except that an additional vernier scale is placed on the sleeve so that a reading of ten-thousandths is obtained and added to the thousandths reading. The vernier consists of 10 divisions on the sleeve, shown in B, which occupy the same space as 9 divisions on the thimble. Therefore, the difference between the width of one of the 10 spaces on the vernier and one of the 9 spaces on the thimble is one-tenth of a division on the thimble, or one-tenth of one-thousandth, which is one ten-thousandth. To read a ten-thousandths micrometer, first obtain the thousandths reading, then see which of the lines on the vernier coincides with a line on the thimble. If it is the line marked “1,” add one ten-thousandth; if it is the line marked “2,” add two ten-thousandths; and so on.

EXAMPLE: REFER TO INSETS A AND B IN FIGURE 10-19.

The “2” line on sleeve is visible, representing	0.200 in.
Two additional lines, each representing 0.025”	2 × .025” = −0.050 in.
Line “O” on the thimble coincides with the reading line on the sleeve, representing	0.000 in.
The “O” lines on the vernier coincide with lines on the thimble, representing	0.000 in.
The micrometer reading is	0.2500 in.

Now you try to read inset C.

The “2” line on sleeve is visible, representing	0.200 in.
Two additional lines, each representing 0.025”	2 × 0.025′ = 0.050 in.
The reading line on the sleeve lies between the “O” and “1”on the thimble, so ten-thousandths of an inch is to be added as read from the vernier.	
The “7” line on the vernier coincides with a line on the thimble, representing	7 × 0.0001″ = 0.007 in.
The micrometer reading is	0.2507 in.

However, owing to the lack of pressure control, micrometers can seldom be relied on for accuracy beyond 0.0005 in., and such vernier scales are not used extensively. On metric micrometers the graduations on the sleeve and thimble are usually 0.5 mm and 0.01 mm, respectively (see the Problems at the end of the chapter).

Many errors have resulted from the ordinary micrometer being misread, the error being ±0.025 or ±0.5 mm. Consequently, direct-reading micrometers have been developed. Figure 10-20 shows a digital outside micrometer that reads to 0.001 in. on the digit counter and 0.0001 in. on the vernier on the sleeve. The range of a micrometer is limited to 1 in. Thus a number of micrometers of various sizes are required to cover a wide range of dimensions. To control the pressure between the anvil, the spindle, and the piece being measured, most micrometers are equipped with a ratchet or a friction device, as shown in Figures 10-19 and 10-20. Calipers that do not have this device may be overtightened and sprung by several thousandths by applying excess torque to the thimble. Micrometer

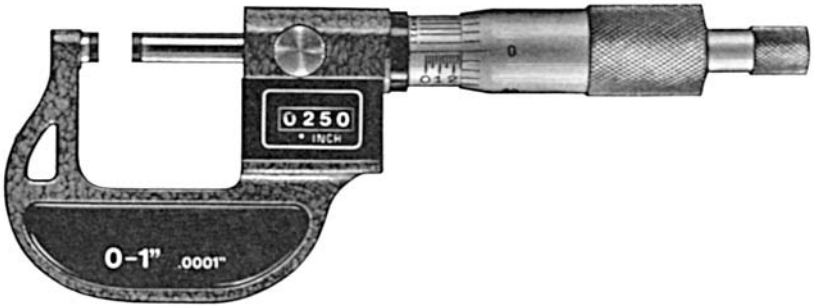

FIGURE 10-20 Digital micrometer for measurements from 0 to 1 in., in 0.0001-in. graduations.

calipers should not usually be relied on for measurements of greater accuracy than 0.01 mm or 0.001 in., unless they are of the new digital design.

Micrometer calipers are available with a variety of specially shaped anvils and/or spindles, such as point, balls, and disks, for measuring special shapes, including screw threads. Micrometers are also available for inside measurements, and the micrometer principle is also incorporated into a *micrometer depth gage*.

Bench micrometers with direct readout to data processors are becoming standard inspection devices on the plant floor (see Figure 10-21). The data processor provides a record of measurement as well as control charts and histograms. Direct-gaging height gages, calipers, indicators, and micrometers are also available with statistical analysis capability. See Chapter 38 for more discussion on control charts and process capability.

Larger versions of micrometers, called *supermicrometers*, are capable of measuring 0.0001 in. when equipped with an indicator that shows that a selected pressure between the anvils has been obtained. The addition of a digital readout permits the device to measure to ±0.00005 in. (0.001 mm) directly when it is used in a controlled-temperature environment.

The *toolmaker's microscope*, shown in Figure 10-22, is a versatile instrument that measures by optical means; no pressure is involved. Thus it is very useful for making ac-

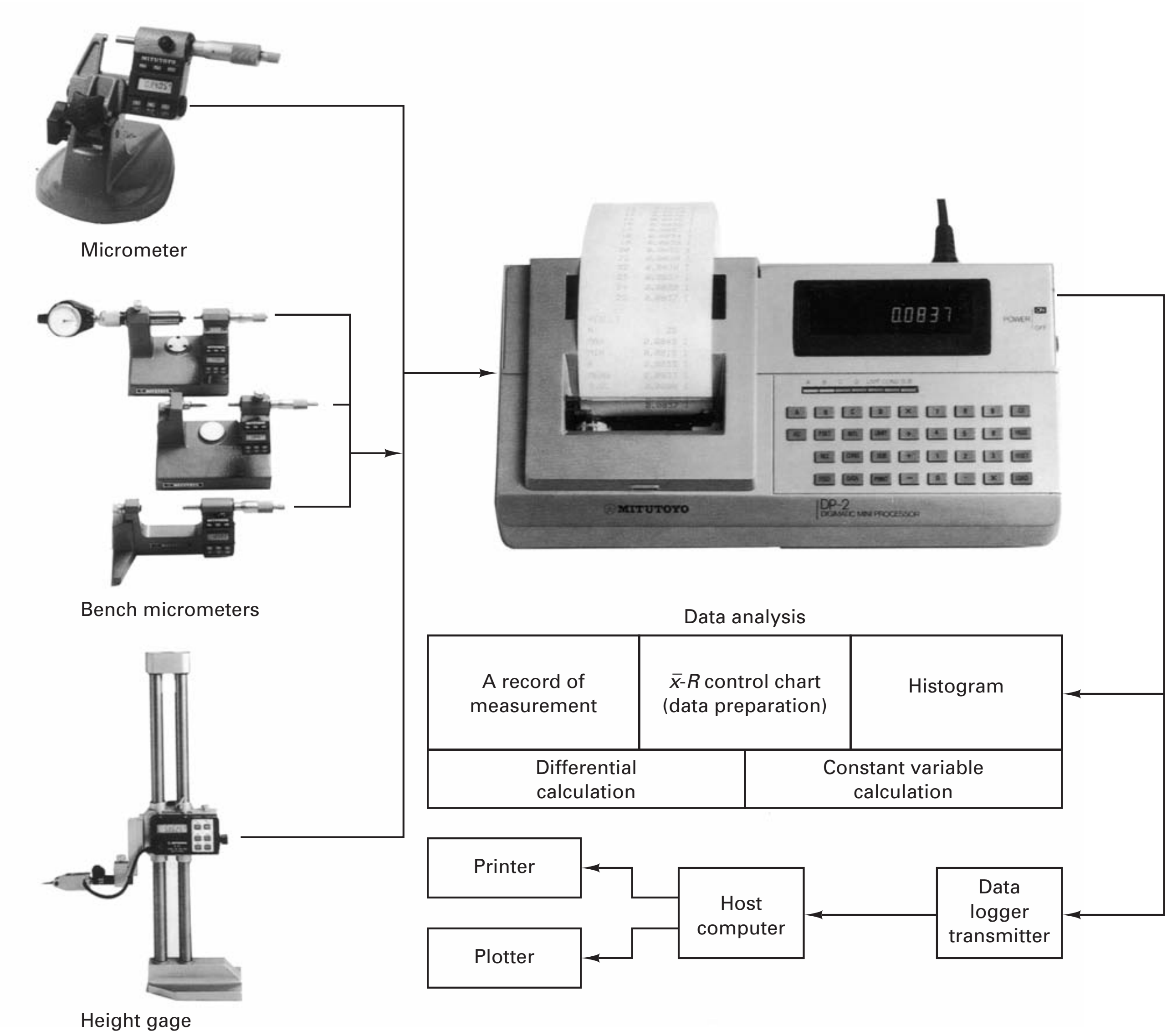

FIGURE 10-21 Direct-gaging system for process control and statistical analysis of inspection data. *(Courtesy of MITUTOYO.)*

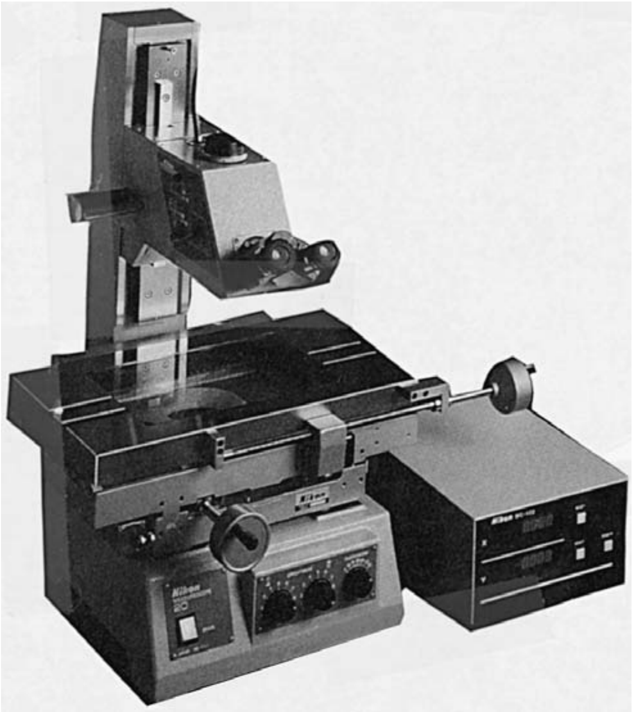

FIGURE 10-22 Toolmaker's microscope with digital readouts for X and Y table movements.
(Courtesy of Nikon.)

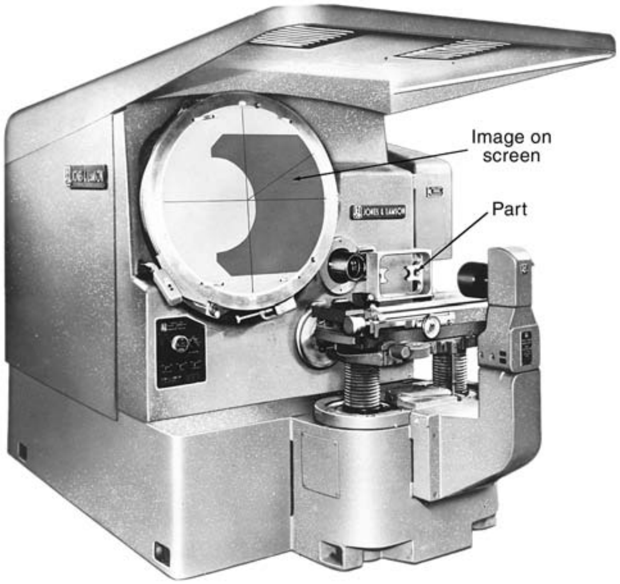

FIGURE 10-23 Optical comparator, measuring the contour on a workpiece. Digital indicators with conversions add to the utility of optical comparators.

curate measurements on small or delicate parts. The base, on which the special microscope is mounted, has a table that can be moved in two mutually perpendicular, horizontal directions (X and Y) by means of accurate micrometer screws that can be read to 0.0001 in. or, if so equipped, by means of the digital readout. Parts to be measured are mounted on the table, the microscope is focused, and one end of the desired part feature is aligned with the cross-line in the microscope. The reading is then noted, and the table is moved until the other extremity of the part coincides with the cross-line. From the final reading, the desired measurement can be determined. In addition to a wide variety of linear measurements, accurate angular measurements can also be made by means of a special protractor eyepiece. These microscopes are available with digital readouts.

The *optical projector* or *comparator* (Figure 10-23) is a large optical device on which both linear and angular measurements can be made. As with the toolmaker's microscope, the part to be measured is mounted on a table that can be moved in X and Y directions by accurate micrometer screws. The optical system projects the image of the part on a screen, magnifying it from 5 to more than 100 times. Measurements can be made directly by means of the micrometer dials, the digital readouts, or the dial indicators, or on the magnified image on the screen by means of an accurate rule. A very common use for this type of instrument is the checking of parts, such as dies and screws. A template is drawn to an enlarged scale and is placed on the screen. The projected contour of the part is compared to the desired contour on the screen. Some projectors also function as low-power microscopes by providing surface illumination.

MEASURING WITH LASERS

One of the earliest and most common metrological uses of low-power lasers has been in interferometry. The interferometer uses light interference bands to determine distance and thickness of objects (Figure 10-24). First, a beam splitter divides a beam of light into a measurement beam and a reference beam. The measurement beam travels to a reflector (optical glass plate A), resting on the part whose distance is to be measured, while the reference beam is directed at fixed reflector B. Both beams are reflected back through the beam splitter, where they are recombined into a single beam before traveling

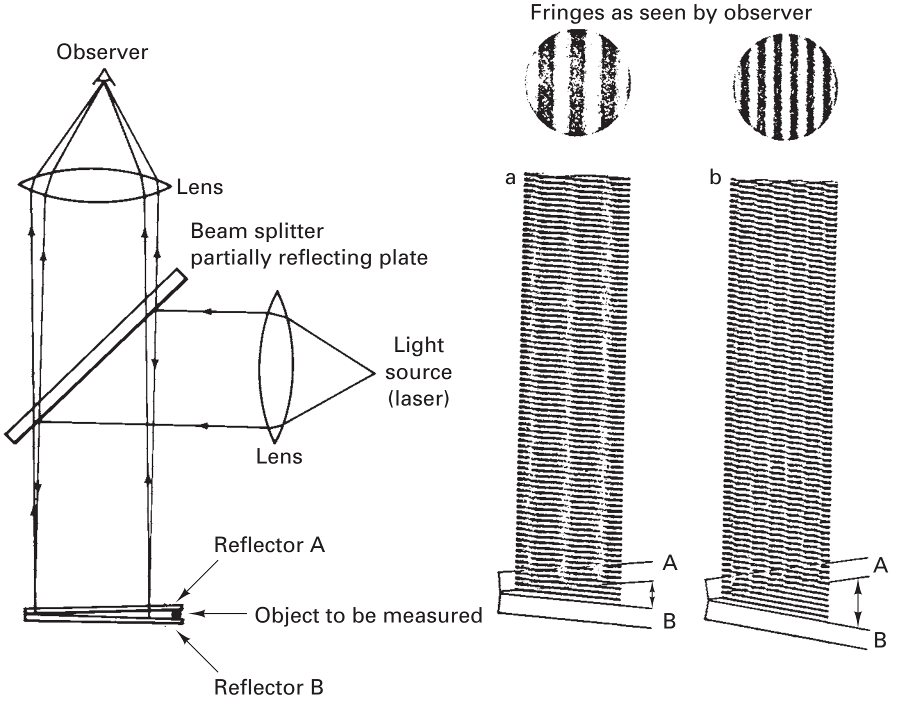

FIGURE 10-24 Interference bands can be used to measure the size of objects to great accuracy. *(Based on the Michelson interferometer, invented in 1882.)*

to the observer. This recombined beam produces interference fringes, depending on whether the waves of the two returning beams are in phase (called *constructive interference*) or out of phase (termed *destructive interference*). In-phase waves produce a series of bright bands, and out-of-phase waves produce dark bands. The number of fringes can be related to the size of the object, measured in terms of light waves of a given frequency. The following example will explain the basics of the method.

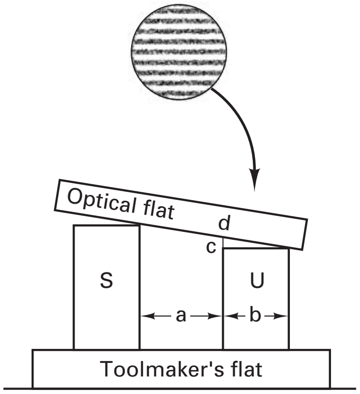

FIGURE 10-25 Method of calibrating gage block by light-wave interference.

To determine the size of object U in Figure 10-25, a calibrated reference standard S, an optical flat, and a toolmaker's flat are needed, along with a monochromatic light source. *Optical flats* are quartz or special glass disks, from 2 to 10 in. (50 to 250 mm) in diameter and about $\frac{1}{2}$ to 1 in. (12 to 25 mm) thick, whose surfaces are very nearly true planes and nearly parallel. Flats can be obtained with the surfaces within 0.000001 in. (0.00003 mm) of true flatness. It is not essential that both surfaces be accurate or that they be exactly parallel, but one must be certain that only the accurate surface is used in making measurements. A *toolmaker's flat* is similar to an optical flat but is made of steel and usually has only one surface that is accurate. A *monochromatic light source*, light of a single wavelength, must be used. Selenium, helium, or cadmium light sources are commonly used along with helium-neon lasers.

The block to be measured is U and the calibrated block is S. Distances a and b must be known but do not have to be measured with great accuracy. By counting the number of *interference bands* shown on the surface of block U, the distance c–d can be determined. Because the difference in the distances between the optical flat and the surface of U is one-half wavelength, each dark band indicates a change of one-half wavelength in the elevation. If a monochromatic light source having a wavelength of 23.2 μin. (0.589 mm) is used, each interference band represents 11.6 μin. (0.295 μm). Then, by simple geometry, the difference in the heights of the two blocks can be computed. The same method is applicable for making precise measurements of other objects by comparing them with a known gage block.

Accurate measurement of distances greater than a few inches was very difficult until the development of laser interferometry, which permits accuracies of ±0.5 part per million over a distance of 6.1 m with 0.01 μm resolution. Such equipment is particularly useful in checking the movement of machine tool tables, aligning and checking large assembly jigs, and making measurements of intricate machined parts such as tire-tread molds.

The Hewlett-Packard laser interferometer (Figure 10-26) uses a helium–neon laser beam split into two beams, each of different frequency and polarized. When the beams are recombined, any relative motion between the optics creates a Doppler shift in the frequency. This shift is then converted into a distance measurement. The laser light has less tendency to diverge (spread out) and is also monochromatic (of the same wavelength). A process that has been largely confined to the optical industry and the metrology lab is now suitable for the factory, where its extremely precise distance-measuring capabilities have been applied to the alignment and calibration of machine tools.

The company's first two-frequency interferometer calibration system was introduced in 1970 to overcome workplace contamination by thermal gradients, air turbulence, oil mist, and so on, which affect the intensity of light. Doppler laser interferometers are relatively insensitive to such problems. The system can be used to measure linear distances, velocities, angles, flatness, straightness, squareness, and parallelism in machine tools.

Lasers provide for accurate machine tool alignment. Large, modern machine tools can move out of alignment in a matter of months, causing production problems often attributed to the cutting tools, the workholders, the machining conditions, or the numerical control part program.

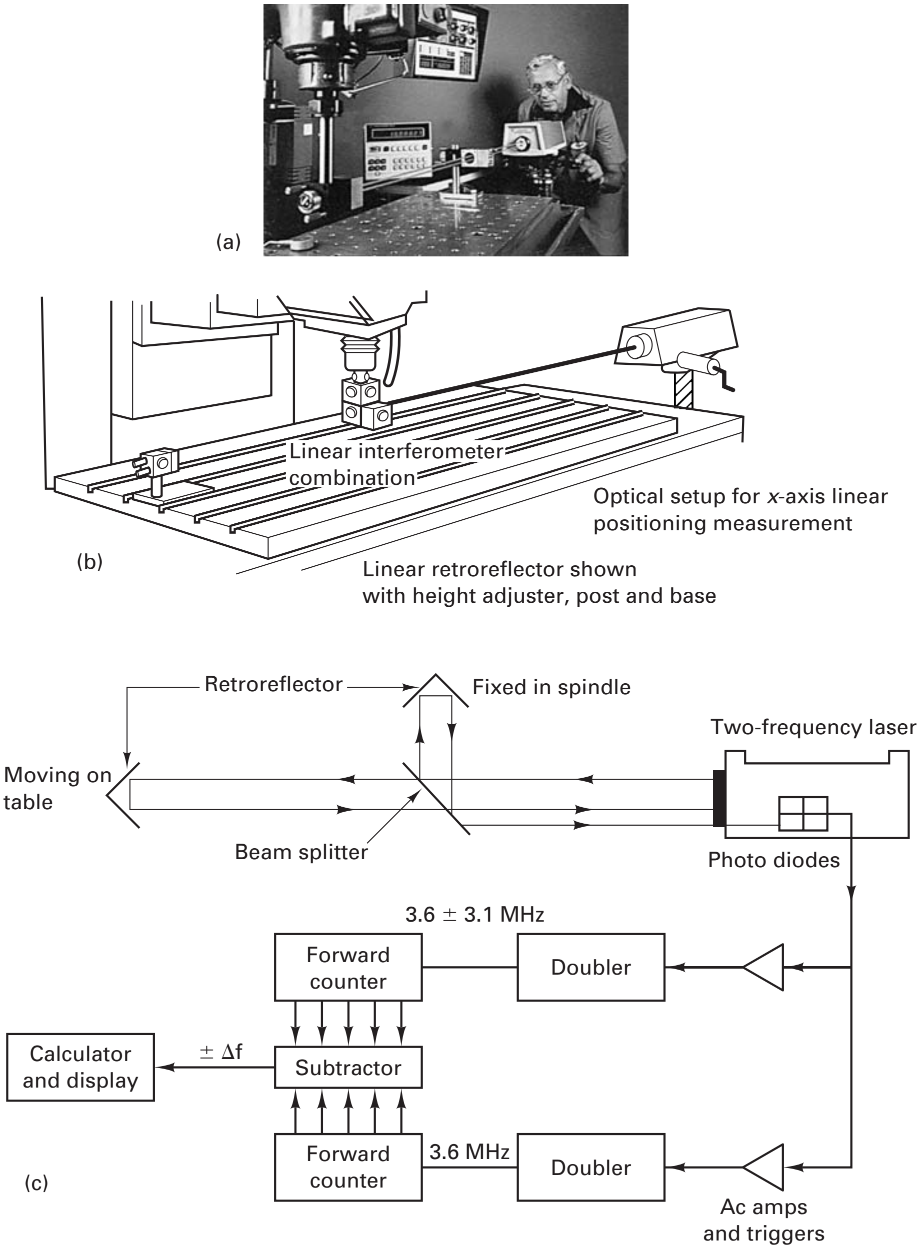

FIGURE 10-26 (Top) Calibrating the x-axis linear table displacement of a vertical spindle milling machine; (middle) schematic of optical setup; (bottom) schematic of components of a two-frequency laser interferometer. *(Courtesy of Hewlett-Packard.)*

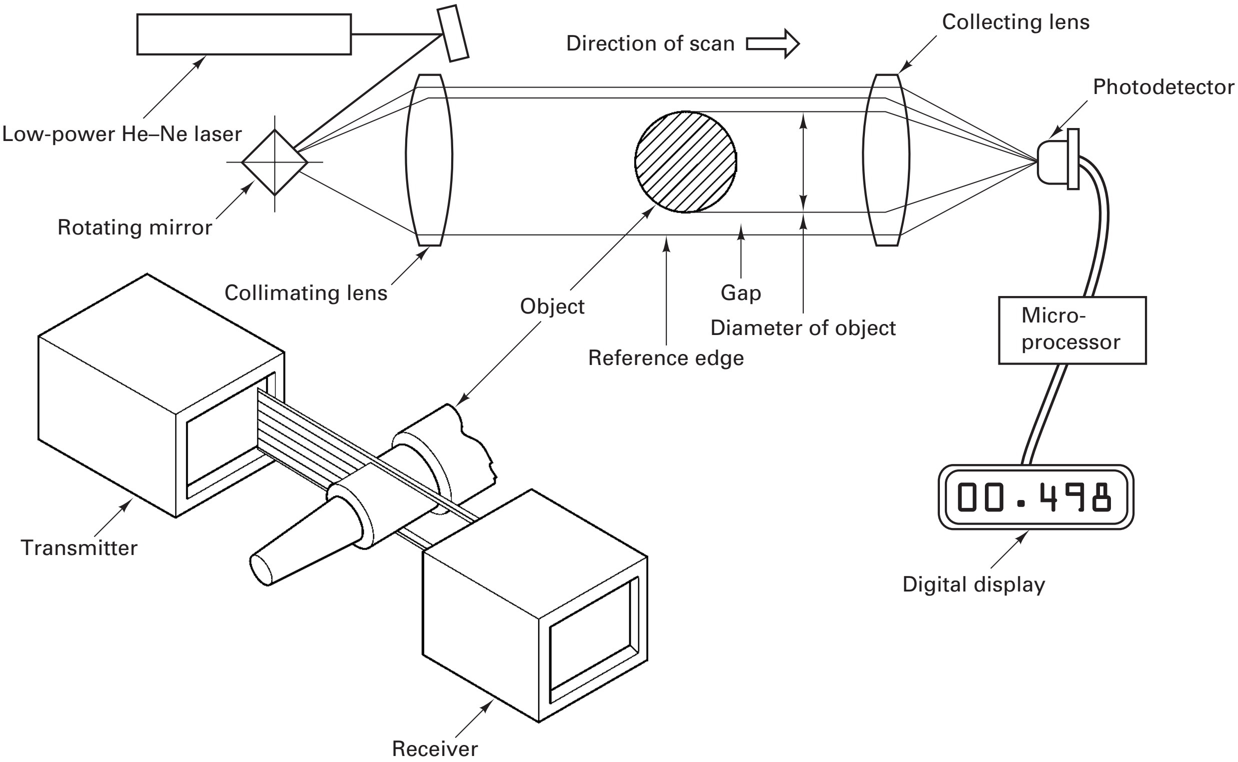

FIGURE 10-27 Scanning laser measuring system. *(Courtesy of ZYGO Corporation.)*

Light interference also makes it possible to determine easily whether a surface is exactly flat. The achievement of interference fringes is largely dependent on the coherence of the light used. The availability of highly coherent *laser* light (in-phase light of a single frequency) has made interferometry practical in far less restrictive environments than in the past. The sometimes arduous task of extracting usable data from a close-packed series of interference fringes has been taken over by microprocessors.

The most widely used laser technique for inspection and in-process gaging is known as *laser scanning*. At its most basic level, the process consists of placing an object between the source of the laser beam and a receiver containing a photodiode. A microprocessor then computes the object's dimensions based on the shadow that the object casts (Figure 10-27).

The noncontact nature of laser scanning makes it well suited to in-process measurement, including such difficult tasks as the inspection of hot-rolled or extruded material, and its comparative simplicity has led to the development of highly portable systems. The bench gage versions can measure to resolutions of 0.0001 mm.

10.6 VISION SYSTEMS FOR MEASUREMENT

If a picture is worth a thousand words, then vision systems are the tome of inspection methods (see Figure 10-28). Machine vision is used for visual inspection, for guidance and control, or for both. Normal TV image formation on photosensitive surfaces or arrays is used, and the video signals are analyzed to obtain information about the object. Each picture frame represents the object at some brief interval of time. Each frame must be dissected into picture elements (called *pixels*). Each pixel is *digitized* (has binary numbers assigned to it) by fixing the brightness or gray level of each pixel to produce a *bit-map* of the object (Figure 10-29). That is, each pixel is assigned a numerical value based on its shade of gray. Image preprocessing improves the quality of the image data by removing unwanted detail. The bit-map is stored in a buffer memory. By analyzing and processing the digitized and stored bit-map, the patterns are extracted, edges located, and dimensions determined.

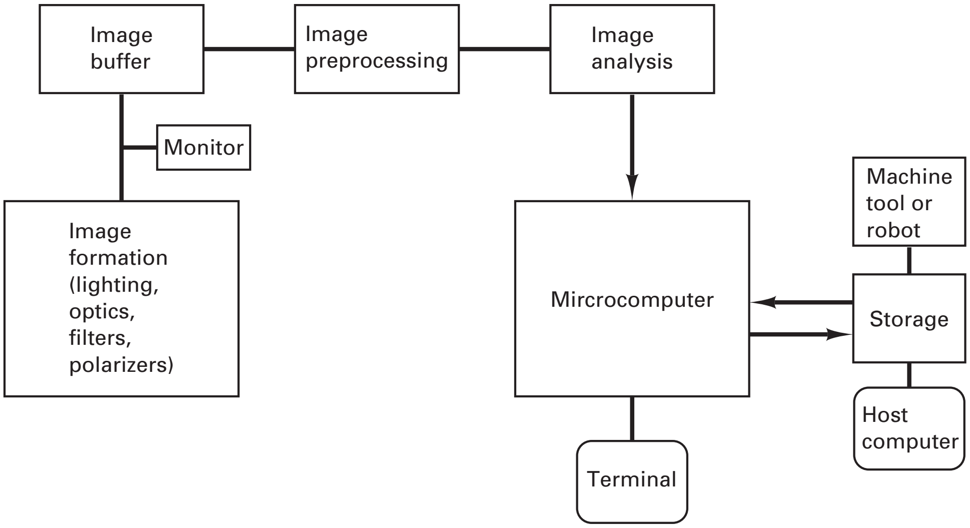

FIGURE 10-28 Schematic of elements of a machine vision system.

Sophisticated computer algorithms using artificial intelligence have greatly reduced the computer operations needed to achieve a result, but even the most powerful video-based systems currently require one to two seconds to achieve a measurement. This may be too long a time for many on-line production applications. Table 10.6 provides a comparison of vision systems to laser scanning.

With the recent emphasis on quality and 100% inspection, applications for inspection by machine vision have increased markedly. Vision systems can check hundreds of parts per hour for multiple dimensions. Resolutions of ±0.01 in. have been demonstrated, but 0.02 in. is more typical for part location. Machine vision is useful for robot guidance in material handling, welding, and assembly, but nonrobotic inspection and part location applications are still more typical. The use of vision systems in inspection, quality control, sorting, and machining tool monitoring will continue to expand. Systems can cost $100,000 or more to install and must be justified on the basis of improved quality rather than labor replacement.

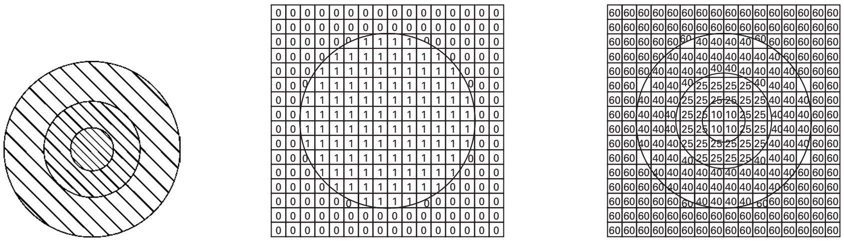

(a) Object

0	0	0	0	0	0	0	0	0	0	0	0	0	0	0	0
0	0	0	0	0	0	0	0	0	0	0	0	0	0	0	0
0	0	0	0	0	0	1	1	1	1	0	0	0	0	0	0
0	0	0	0	1	1	1	1	1	1	1	1	0	0	0	0
0	0	0	1	1	1	1	1	1	1	1	1	1	0	0	0
0	0	0	1	1	1	1	1	1	1	1	1	1	0	0	0
0	0	1	1	1	1	1	1	1	1	1	1	1	1	0	0
0	0	1	1	1	1	1	1	1	1	1	1	1	1	0	0
0	0	1	1	1	1	1	1	1	1	1	1	1	1	0	0
0	0	1	1	1	1	1	1	1	1	1	1	1	1	0	0
0	0	0	1	1	1	1	1	1	1	1	1	1	0	0	0
0	0	0	1	1	1	1	1	1	1	1	1	1	0	0	0
0	0	0	0	1	1	1	1	1	1	1	1	0	0	0	0
0	0	0	0	0	0	1	1	1	1	0	0	0	0	0	0
0	0	0	0	0	0	0	0	0	0	0	0	0	0	0	0
0	0	0	0	0	0	0	0	0	0	0	0	0	0	0	0

(b) Video picture frame

60	60	60	60	60	60	60	60	60	60	60	60	60	60	60	60
60	60	60	60	60	60	60	60	60	60	60	60	60	60	60	60
60	60	60	60	60	60	40	40	40	40	60	60	60	60	60	60
60	60	60	60	40	40	40	40	40	40	40	40	60	60	60	60
60	60	60	40	40	40	40	40	40	40	40	40	40	60	60	60
60	60		40	40	40	25	25	25	25	40	40	40		60	60
60	60	40	40	40	25	25	25	25	25	25	40	40	40	60	60
60	60	40	40	40	25	25	10	10	25	25	40	40	40	60	60
60	60	40	40	40	25	25	10	10	25	25	40	40	40	60	60
60	60	40	40	40	25	25	25	25	25	25	40	40	40	60	60
60	60		40	40	40	25	25	25	25	40	40	40		60	60
60	60	60	40	40	40	40	40	40	40	40	40	40	60	60	60
60	60	60	60	40	40	40	40	40	40	40	40	60	60	60	60
60	60	60	60	60	60	40	40	40	40	60	60	60	60	60	60
60	60	60	60	60	60	60	60	60	60	60	60	60	60	60	60
60	60	60	60	60	60	60	60	60	60	60	60	60	60	60	60

(c) Digitized frame

FIGURE 10-29 Vision systems use a gray scale to identify objects. (a) Object with three different gray values. (b) One frame of object (pixels). (c) Each pixel assigned a gray-scale number.

TABLE 10-6 Laser Scanning versus Vision Systems

Variable	Laser-Scanning Systems	Video-Based Systems
Ambient lighting	Independent	Dependent
Object motion	Object usually stationary	Multiple cameras or strobe lighting may be required
Adaptability to robot systems	Readily adapted; some limitations on robot motion speed or overall system operation	Readily adapted; image-processing delays may delay system operation
Signal processing	Simple; computers often not required	Requires relatively powerful computers with sophisticated software
Cycle time	Very fast	Seconds of computer time may be needed
Applicability to simple tasks	Readily handled; edges and features produce sharp transitions in signal	Requires extensive use of sophisticated software algorithms to identify edges
Sizing capability	Can size an object in a single scan per axis	Can size on horizontal axis in one scan; other dimensions require full-frame processing
Three-dimensional capability	Limited three dimensionality; needs ranging capability	Uses two views of two cameras with sophisticated software or structured light
Accuracy and precision	Submicrometer 0.001 to 0.0001 in. or better accuracy; highly repeatable	Depends on resolution of cameras and distance between camera and object; systems with 0.004-in. precision and 0.006-in. accuracy are typical

10.7 COORDINATE MEASURING MACHINES

Precision measurements in three-dimensional Cartesian coordinate space can be made with *coordinate measuring machines* (CMM) of the design shown in Figure 10-30. The parts are placed on a large granite flat or the table. The vertical arm carries a probe that can be precisely moved in *x–y–z* directions to produce 3D measurements. In this design, the vertical column rides on a bridge beam and carries a touch-trigger probe. Such machines use digital readouts, air bearings, computer controls, and granite tables to achieve accuracies of the order of 0.0002 to 0.0004 in. over spans of 10 to 30 in. or more. These systems may have computer routines that give the best fit to feature measurements and that provide the means of establishing geometric tolerances, discussed earlier in this chapter. Figure 10-31 gives a partial listing of the results one can achieve with these machines.

10.8 ANGLE-MEASURING INSTRUMENTS

Accurate angle measurements are usually more difficult to make than linear measurements. Angles are measured in degrees (a degree is $\frac{1}{360}$ part of a circle) and decimal subdivisions of a degree (or in minutes and seconds of arc). The SI system calls for measurements of plane angles in radians, but degrees are permissible. The use of degrees will continue in manufacturing, but with minutes and seconds of arc possibly being replaced by decimal portions of a degree.

The bevel protractor (Figure 10-32) is the most general angle-measuring instrument. The two movable blades are brought into contact with the sides of the angular part, and the angle can be read on the vernier scale to 5 minutes of arc. A clamping device is provided to lock the blades in any desired position so that the instrument can be used for both direct measurement and layout work. As indicated previously, an angle attachment on the combination set can also be used to measure angles, similar to the way a bevel protractor is used but usually with somewhat less accuracy.

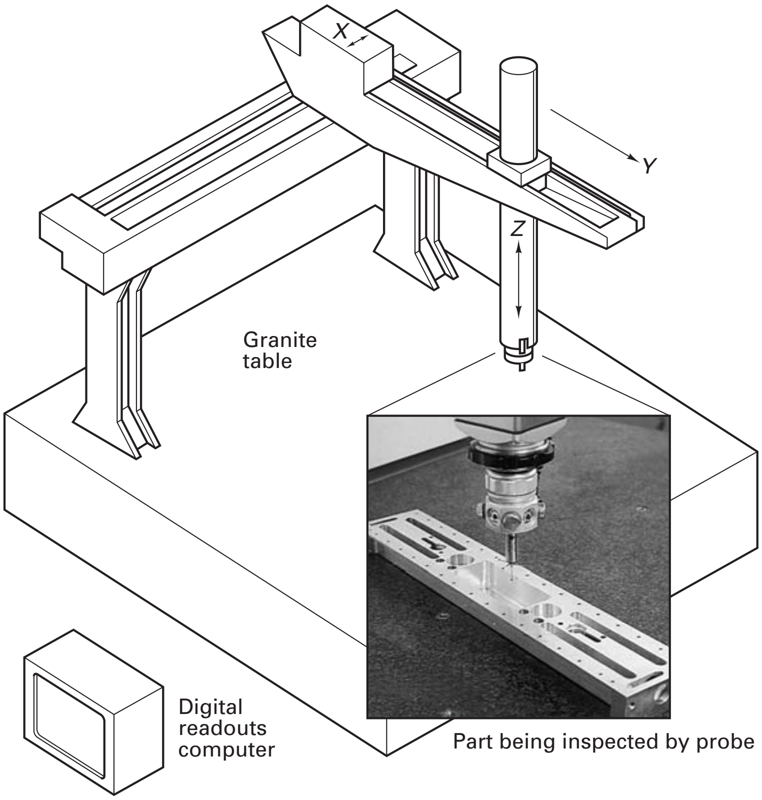

FIGURE 10-30 Coordinate measuring machine with inset showing probe and a part being measured.

Straightness

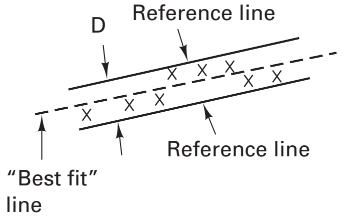

Straightness
Measured or previously calculated points may be used to determine a "best fit" line. The form routine establishes two reference lines that are parallel to the "best fit" line and that just contain all of the measured or calculated points.
Straightness is defined as the distance D between these two reference lines.

Flatness

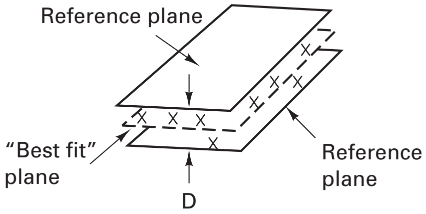

Flatness
Measured or previously calculated points may be used to determine the "best fit" plane. The form routine establishes two reference planes that are parallel to the "best fit" plane and that just contain all of the measured or calculated points.
Flatness is defined as the distance D between these two reference planes.

Roundness

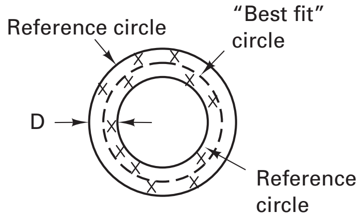

Roundness
Measured or previously calculated points may be used to determine the "best fit" circle. The form routine establishes two reference circles that are concentric with the "best fit" circle and that just contain all of the measured or calculated points.
Roundness is defined as the difference D in radius of these two reference circles.

Cylindricity

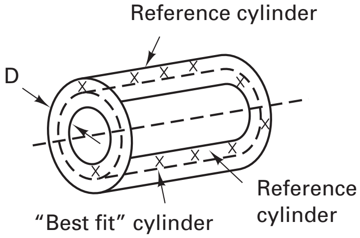

Cylindricity
Measured or previously calculated points may be used to determine the "best fit" cylinder. The form routine establishes two reference cylinders that are co-axial to the "best fit" cylinder and that just contain all of the measured or calculated points.
Cylindricity is the difference D in radius of these two reference cylinders.
Also applicable to stepped cylinders.

Conicity

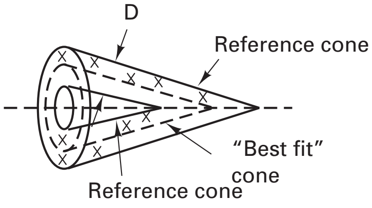

Conicity
Measured or previously calculated points may be used to determine the "best fit" cone. The form routine establishes two reference cones that are co-axial with and similar to the "best fit" cone and that just contain all of the measured or calculated points.
Conicity is defined as the distance D between the side of these two reference cones.

FIGURE 10-31 Examples of geometric form tolerances developed by probing surface with a CMM.

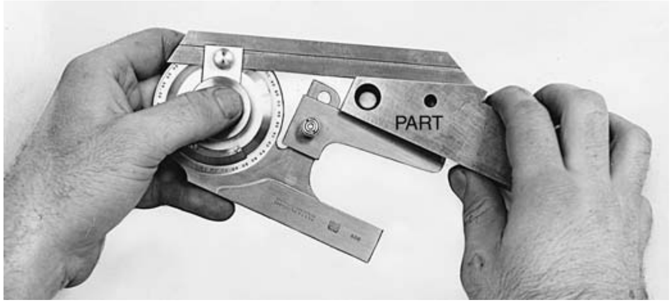

FIGURE 10-32 Measuring an angle on a part with a bevel protractor. *(Courtesy of Brown & Sharpe Mfg. Co.)*

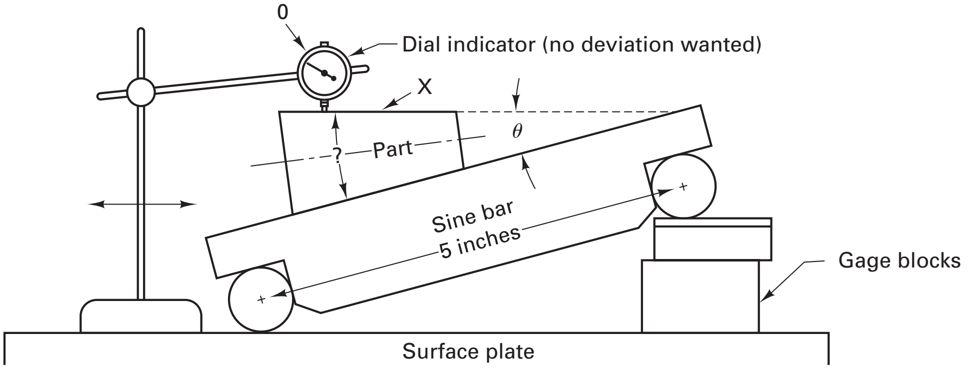

FIGURE 10-33 Setup to measure an angle on a part using a sine bar. The dial indicator is used to determine when the part surface *X* is parallel to the surface plate.

The toolmaker's microscope is very satisfactory for making angle measurements, but its use is restricted to small parts. The accuracy obtainable is 5 minutes of arc. Similarly, angles can be measured on the optical contour projector. Angular measurements can also be made by means of an angular interferometer with the laser system.

A *sine bar* may be used to obtain accurate angle measurements if the physical conditions will permit. This device (Figure 10-33) consists of an accurately ground bar on which two accurately ground pins of the same diameter are mounted an exact distance apart. The distances used are usually either 5 or 10 in., and the resulting instrument is called a 5- or 10-in. sine bar. Sine bars are also available with millimeter dimensions. Measurements are made by using the principle that the sine of a given angle is the ratio of the opposite side to the hypotenuse of the right triangle.

The part being measured is attached to the sine bar, and the inclination of the assembly is raised until the top surface is exactly parallel with the surface plate. A stack of gage blocks is used to elevate one end of the sine bar, as shown in Figure 10-33. The height of the stack directly determines the difference in height of the two pins. The difference in height of the pins can also be determined by a dial indicator gage or any other type of gage. The difference in elevation is then equal to either 5 or 10 times the sine of the angle being measured, depending on whether a 5- or 10-in. bar is being used. Tabulated values of the angles corresponding to any measured elevation difference for 5- or 10-in. sine bars are available in various handbooks. Several types of sine bars are available to suit various requirements.

Accurate measurements of angles to 1 second of arc can be made by means of *angle gage blocks*. These come in sets of 16 blocks that can be assembled in desired combinations. Angle measurements can also be made to ±0.001° on rotary indexing tables having suitable numerical control.

■ 10.9 GAGES FOR ATTRIBUTES MEASURING

In manufacturing, particularly in mass production, it may not be necessary to know the exact dimensions of a part, only that it is within previously established limits. Limits can often be determined more easily than specific dimensions by the use of attribute-type instruments called *gages*. They may be of either fixed type or deviation type, may be used for both linear and angular dimensions, and may be used manually or mechanically (automatically).

FIXED-TYPE GAGES

Fixed-type gages are designed to gage only one dimension and to indicate whether it is larger or smaller than the previously established standard.

They do not determine how much larger or smaller the measured dimension is than the standard. Because such gages fulfill a simple and limited function, they are relatively inexpensive and usually quick and easy to use.

Gages of this type are ordinarily made of hardened steel of proper composition and are heat treated to produce dimensional stability. Hardness is essential to minimize wear and maintain accuracy. Because steels of high hardness can become dimensionally un-

FIGURE 10-34 Plain plug gage having the go member on the left end (1.1250-in. diameter) and no-go member on the right end. *(Courtesy of Sheffield.)*

FIGURE 10-35 Step-type plug gage with go and no-go elements on the same end. *(Courtesy of Sheffield.)*

stable, some fixed gages are made of softer steel, then given a hard chrome plating to provide surface hardness. Chrome plating can also be used for reclaiming some worn gages. Where gages are to be subjected to extensive use, they may be made of tungsten carbide at the wear points.

One of the most common fixed gages is the *plug gage.* As shown in Figure 10-34, plug gages are accurately ground cylinders used to gage internal dimensions, such as holes. The gaging element of a *plain plug gage* has a single diameter. To control the minimum and maximum limits of a given hole, two plug gages are required. The smaller, or *go gage*, controls the minimum because it must go (slide) into any hole that is larger than the required minimum. The larger, or *no-go gage*, controls the maximum dimension because it will not go into any hole unless that hole is over the maximum permissible size. The go and no-go plugs are often designed with two gages on a single handle for convenience in use. The no-go plug is usually much shorter than the go plug; it is subjected to little wear because it seldom slides into any holes. Figure 10-35 shows a *step-type go/no-go gage* that has the go and no-go diameters on the same end of a single plug, the go portion being the outer end. The user knows that the part is good if the *go* gage goes into the hole but the *no-go* gage does not go. Such gages require careful use and should never be forced into (or onto) the part. Obviously these plug gages were specially designated and made for checking a specific hole on a part.

In designing plug and snap ring gages, the key principle is: *it is better to reject a good part than declare a bad part to be within specifications*. All gage design decisions are made with this principle in mind. Gages must have tolerances like any manufactured components. All gages are made with gage and wear tolerances. Gage tolerance allows for the permissible variation in the manufacture of the gage. It is typically 5 to 20% (depending on the industry) of the tolerance on the dimension being gaged. Wear tolerances compensate for the wear of the gage surface as a result of repeated use. Wear tolerance is applied only to the go side of the gage because the no-go side should seldom see contact with a part surface. It is typically 5 to 20% of the dimensional tolerance.

Plug-type gages are also made for gaging shapes other than cylindrical holes. Three common types are *taper plug gages, thread plug gages,* and *spline gages*. Taper plug gages gage both the angle of the taper and its size. Any deviation from the correct angle is indicated by looseness between the plug and the tapered hole. The size is indicated by the depth to which the plug fits into the hole, the correct depth being denoted by a mark on the plug. Thread plug gages come in go and no-go types. The go gage must screw into the threaded holes, and the no-go gage must not enter.

Ring gages are used to check shafts or other external round members. These are also made in go and no-go types, as shown in Figure 10-36. Go ring gages have plain knurled exteriors, whereas no-go ring gages have a circumferential groove in the knurling, so that they can easily be distinguished. *Ring thread gages* are made to be slightly adjustable because it is almost impossible to make them exactly to the desired size. Thus they are adjusted to exact, final size after the final grinding and polishing have been completed.

FIGURE 10-36 Go and no-go (on right) ring gages for checking a shaft. *(Courtesy of Automation and Measurement Division, Bendix Corporation.)*

Snap gages are the most common type of fixed gage for measuring external dimensions. As shown in Figure 10-37, they have a rigid, U-shaped frame on which are two or three gaging surfaces, usually made of hardened steel or tungsten carbide. In the adjustable type shown, one gaging surface is fixed, and the other(s) may be adjusted over a small range and locked at the desired position(s). Because in most cases one wishes to control both the maximum and the minimum dimensions, the *progressive* or *step-type snap gage* is used most frequently. These gages have one fixed anvil and two

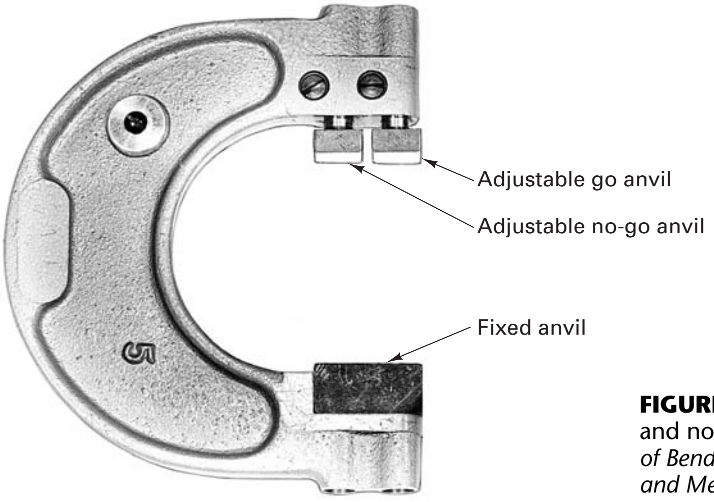

FIGURE 10-37 Adjustable go and no-go snap gage. *(Courtesy of Bendix Corporation, Automation and Measurement Division.)*

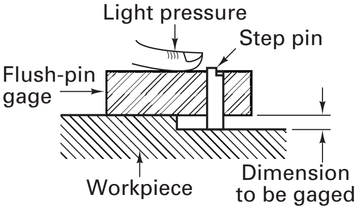

FIGURE 10-38 Flush-pin gage being used to check height of step.

adjustable surfaces to form the outer go and the inner no-go openings, thus eliminating the use of separate go and no-go gages.

Snap gages are available in several types and a wide range of sizes. The gaging surfaces may be round or rectangular. They are set to the desired dimensions with the aid of gage blocks.

Many types of special gages are available or can be constructed for special applications. The *flush-pin gage* (Figure 10-38) is an example for gaging the depth of a shoulder. The main section is placed on the higher of the two surfaces, with the movable step pin resting on the lower surface. If the depth between the two surfaces is sufficient but not too great, the top of the pin, but not the lower step, will be slightly above the top surface of the gage body. If the depth is too great, the top of the pin will be below the surface. Similarly, if the depth is not great enough, the lower step on the top of the pin will be above the surface of the gage body. When a finger or fingernail is run across the top of the pin, the pin's position with respect to the surface of the gage body can readily be determined.

Several types of *form gages* are available for use in checking the *profile* of various objects. Two of the most common types are *radius gages* (Figure 10-39) and *screw-thread pitch gages* (Figure 10-40).

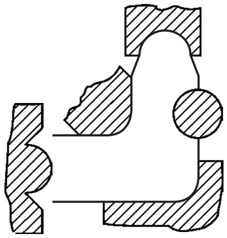

FIGURE 10-39 Set of radius gages, showing how they are used. *(Courtesy of MTI Corporation.)*

DEVIATION-TYPE GAGES

A large amount of gaging, and some measurement, is done through the use of *deviation-type gages*, which determine the amount by which a measured part deviates, plus or minus, from a standard dimension to which the instrument has been set. In most cases, the deviation is indicated directly in units of measurement, but in some cases, the gage shows only whether the deviation is within a permissible range. A good example of a deviation-type gage is a flashlight battery checker, which shows whether the battery is good (green), bad (red), or borderline (yellow) but not how much voltage or current is generated. Such gages use mechanical, electrical, or fluidic amplification techniques so that very small linear deviations can be detected. Most are quite rugged, and they are available in a variety of designs, amplifications, and sizes.

Dial indicators, as shown in Figure 10-41, are a widely used form of deviation-type gage. Movement of the gaging spindle is amplified mechanically through a rack and pinion and a gear train and is indicated by a pointer on a graduated dial. Most dial indicators have a spindle travel equal to about $2\frac{1}{2}$ revolutions of the indicating pointer and are read in either 0.001 or 0.0001 in. (or 0.02 or 0.002 mm).

The dial can be rotated by means of the knurled bezel ring to align the zero point with any position of the pointer. The indicator is often mounted on an adjustable arm to permit its being brought into proper relationship with the work. It is important that the axis of the spindle be aligned exactly with the dimension being gaged if accuracy is to be achieved. Digital dial indicators are also readily available.

FIGURE 10-40 Thread pitch gages. *(Courtesy of L.S. Starrett Company.)*

FIGURE 10-41 Digital dial indicator with 1-in. range and 0.0001-in. accuracy. *(Courtesy of CDI.)*

Dial indicators should be checked occasionally to determine if their gage capability has been lost through wear in the gear train. Also, it should be remembered that the pressure of the spindle on the work varies because of spring pressure as the spindle moves into the gage. This spring pressure normally causes no difficulty unless the spindles are used on soft or flexible parts.

Linear variable-differential transformers (LVDT) are used as sensory elements in many electronic gages, usually with a solid-state diode display or in automatic inspection setups. These devices can frequently be combined into multiple units for the simultaneous gaging of several dimensions. Ranges and resolutions down to 0.0005 and 0.00001 in. (0.013 and 0.00025 mm, respectively) are available.

Air gages have special characteristics that make them especially suitable for gaging holes or the internal dimensions of various shapes. A typical gage of this type, shown earlier in Figure 10-12, indicates the clearance between the gaging head and the hole by measuring either the volume of air that escapes or the pressure drop resulting from the airflow. The gage is calibrated directly in 0.0001-in. or 0.02-mm divisions. Air gages have an advantage over mechanical or electronic gages for this purpose in that they detect not only linear size deviations but also out-of-round conditions. Also, they are subject to very little wear because the gaging member is always slightly smaller than the hole and the airflow minimizes rubbing. Special types of air gages can be used for external gaging.

■ 10.10 TESTING

A variety of tests have been developed to evaluate product quality and ensure the absence of any performance-impairing flaws. *Destructive testing* provides one such means of product assessment. Components or assemblies are selected and then subjected to conditions that induce failure. Determining the specific conditions where failure occurs can provide insight into the performance characteristics and quality of the remaining products. Statistical methods are used to determine the probability that the remaining products would exhibit similar behavior. For example, assume that 100 parts are produced and then one is selected (randomly) and tested to failure. Is it safe to assume that the remaining 99 will perform the same way? A satisfactory test of another randomly selected part (or, more typically, the first and last of the 100 parts) would further increase our confidence in the remaining 98. Additional tests would enhance this confidence, but the cost of destroying each of the tested (i.e., destroyed) products must be borne by the remaining quantity. Regardless of the amount of testing, there will still be some degree of uncertainty since none of the remaining products have actually been subjected to any form of property assessment.

Proof testing is another means of ensuring product quality. Here a product is subjected to a load or pressure of some determined magnitude (generally equal to or greater than the designed capacity or the condition expected during operation). If the part remains intact, there is reason to believe that it will subsequently perform in an adequate fashion, provided it is not subjected to abuse or service conditions that exceed its rated level. Proof tests can be conducted under laboratory conditions or at the site of installation or assembly, as with large manufactured assemblies such as pressure vessels.

In some situations, *hardness tests* can be used to provide insight into the quality of a product. With the correct material and proper heat treatment, the resulting hardness values should fall within a well-defined range of values. Abnormal results usually indicate some form of manufacturing error, such as improper material, missed operations, or poorly controlled processes. Hardness tests can be performed quickly, and the surface indentations are often small enough that they can be concealed or easily removed from a product. The results, however, relate only to the surface strength of the product and bear no correlation to defects such as cracks or voids.

Table 10-7 provides a summary of the advantages and limitations of destructive testing and compares that approach with *nondestructive testing*. In nondestructive testing, the product is examined in a manner that retains its usefulness for future service. Tests can be performed on parts during or after manufacture, or even on parts that are already in service. An entire production lot can be inspected, or representative samples can be taken. Different tests can be applied to the same item, either simultaneously or sequentially, and the same test can be repeated on the same specimen for additional verification. Little or no specimen preparation is required, and the equipment is often portable, permitting on-site testing in most locations.

Nondestructive tests can detect internal or surface flaws, measure a product's dimensions, determine a material's structure or chemistry, or evaluate a material's physical or mechanical properties. In general, nondestructive tests incorporate the following aspects: (1) some means of probing a material or product; (2) a means by which a flaw, defect, material property, or specimen feature interacts with or modifies whatever is probing; (3) a sensor to detect the response; (4) a device to indicate or record the response; and (5) a way to interpret and evaluate quality.

TABLE 10-7 Advantages and Limitations of Destructive and Nondestructive Testing

Destructive Testing

Advantages

1. Provides a direct and reliable measurement of how a material or component will respond to service conditions.
2. Provides quantitative results, useful for design.
3. Does not require interpretation of results by skilled operators.
4. Usually finds agreement as to meaning and significance of test results.

Disadvantages

1. Applied only to a sample; must show that the sample is representative of the group.
2. Tested parts are destroyed during testing.
3. Usually cannot repeat a test on the same item or use the same specimen for multiple tests.
4. May be restricted for costly or few-in-number parts.
5. Hard to predict cumulative effect of service usage.
6. Difficult to apply to parts in use; if done, testing terminates their useful life.
7. Extensive machining or preparation of test specimens is often required.
8. Capital equipment and labor costs are often high.

Nondestructive Testing

Advantages

1. Can be performed directly on production items without regard to cost or quantity available.
2. Can be performed on 100% of production lot (when high variability is observed) or a representative sample (if sufficient similarity is noted).
3. Different tests can be applied to the same item, and a test can be repeated on the same specimen.
4. Can be performed on parts that are in service; the cumulative effects of service life can be monitored on a single part.
5. Little or no specimen preparation is required.
6. The test equipment is often portable.
7. Labor costs are usually low.

Disadvantages

1. Results often require interpretation by skilled operators.
2. Different observers may interpret the test results differently.
3. Properties are measured indirectly, and results are often qualitative or comparative.
4. Some test equipment requires a large capital investment.

Regardless of the specific test, nondestructive testing can be a vital element in good manufacturing practice. Its potential value has been widely recognized as productivity and production rates increase, consumers demand higher-quality products, and product liability continues to be a concern. Rather than being an added manufacturing cost, nondestructive testing can actually expand profit by ensuring product reliability and customer satisfaction. In addition to its role in quality control, nondestructive testing can also be used as an assessment aid in product design. Periodic testing can provide a means of controlling a manufacturing process and reducing overall manufacturing costs by preventing the continued manufacture of out-of-specification, defective, or poor-quality parts.

10.11 VISUAL INSPECTION

Probably the simplest and most widely used nondestructive testing method is *visual inspection*, summarized in Table 10-8. The human eye is a very discerning instrument and, with training, the brain can readily interpret the signals. Optical aids such as mirrors, magnifying glasses, and microscopes can expand the capabilities of this system. Video cameras and computer systems, such as digital image analyzers, can be used to automate the inspection and perform quantitative geometrical evaluations. Bore scopes and similar tools can provide accessibility to otherwise inaccessible locations. Only the surfaces of a product can be examined, but that is often sufficient to reveal corrosion, contamination, surface-finish flaws, and a wide variety of surface discontinuities.

TABLE 10-8 Visual Inspection

Principle	Illuminate the test specimen and observe the surface. Can reveal a wide spectrum of surface flaws and geometric discontinuities. Use of optical aids or assists (such as magnifying glass, microscopes, illuminators, and mirrors) is permitted. While most inspection is by human eye, video cameras and computer-vision systems can be employed.
Advantages	Simple, easy to use, relatively inexpensive.
Limitations	Depend on skill and knowledge of inspector. Limited to detection of surface flaws.
Material limitations	None.
Geometrical limitations	Any size or shape providing viewing accessibility of surfaces to be inspected.
Permanent record	Photographs or videotapes are possible. Inspectors' reports also provide valuable records.
Remarks	Should always be the initial and primary means of inspection and is the responsibility of everyone associated with parts manufacture.

10.12 LIQUID PENETRANT INSPECTION

Liquid penetrant testing, also called dye penetrant inspection, is an effective method of detecting surface defects in metals and other nonporous materials; it is illustrated schematically in Figure 10-42. The piece to be tested is first subjected to a thorough cleaning and is dried prior to the test. Then a *penetrant*, a liquid material capable of wetting the entire surface and being drawn into fine openings, is applied to the surface of the workpiece by dipping, spraying, or brushing. Sufficient time is given for capillary action to draw the penetrant into any surface discontinuities, and the excess penetrant liquid is then removed by wiping, water wash, or solvent. The surface is then coated with a thin film of *developer*, an absorbent material capable of drawing traces of penetrant from the defects back onto the surface. Brightly colored dyes or fluorescent materials that glow under ultraviolet light are generally added to the penetrant to make these

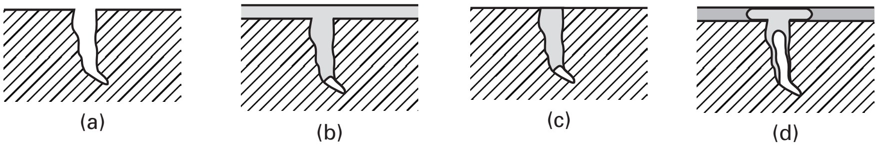

FIGURE 10-42 Liquid penetrant testing: (a) initial surface with open crack; (b) penetrant is applied and is pulled into the crack by capillary action; (c) excess penetrant is removed; (d) developer is applied, some penetrant is extracted, and the product is inspected.

TABLE 10-9 Liquid Penetrant Inspection

Principle	A liquid penetrant containing fluorescent material or dye is drawn into surface flaws by capillary action and subsequently revealed by developer material in conjunction with visual inspection.
Advantages	Simple, inexpensive, versatile, portable, easily interpreted, and applicable to complex shapes.
Limitations	Can only detect flaws that are open to the surface; surfaces must be cleaned before and after inspection; deformed surfaces and surface coatings may prevent detection; and the penetrant may be wiped or washed out of large defects. Cannot be used on hot products.
Material limitations	Applicable to all materials with a nonporous surface.
Geometrical limitations	Any size or shape permitting accessibility of surfaces to be inspected.
Permanent record	Photographs, videotapes, and inspectors' reports provide the most common records.

traces more visible, and the developer is often selected to provide a contrasting background. Radioactive tracers can also be added and used in conjunction with photographic paper to produce a permanent image of the defects. Cracks, laps, seams, lack of bonding, pinholes, gouges, and tool marks can all be detected. After inspection, the developer and residual penetrant are removed by a second cleaning operation.

To be successful, the inspection for surface defects must be correlated with the manufacturing operations. If previous processes such as shot peening, honing, burnishing, machining, or various forms of cold working produced plastic deformation of the surface material, a chemical etching may be required to remove material that might be covering critical flaws. An alternative procedure is to perform a penetrant test before any surface-finishing operations, when significant defects will still be open and available for detection. Penetrant inspection systems can range from aerosol spray cans of cleaner, penetrant, and developer (for portable applications), to automated, mass-production equipment using sophisticated computer vision systems. Table 10-9 is a summary of the process and its advantages and limitations.

10.13 MAGNETIC PARTICLE INSPECTION

Magnetic particle inspection, summarized in Table 10-10, is based on the principle that ferromagnetic materials (such as the alloys of iron, nickel, and cobalt), when magnetized, will have distorted magnetic fields in the vicinity of material defects. As shown in Figure 10-43, surface and subsurface flaws, such as cracks and inclusions, will produce magnetic anomalies that can be mapped with the aid of magnetic particles on the specimen surface. As with the previous method, the specimen must be cleaned prior to inspection. A suitable magnetic field is then established in the part. As shown in Figure 10-44, orientation can be quite important. For a flaw to be detected, it must produce a significant disturbance of the magnetic field at or near the surface. If a bar of

TABLE 10-10 Magnetic Particle Inspection

Principle	When magnetized, ferromagnetic materials will have a distorted magnetic field in the vicinity of flaws and defects. Magnetic particles will be strongly attracted to regions where the magnetic flux breaks the surface.
Advantages	Relatively simple, fast, easy-to-interpret; portable units exist; can reveal both surface and subsurface flaws and inclusions (as much as 6-mm deep) and small, tight cracks.
Limitations	Parts must be relatively clean; alignment of the flaw and the field affects the sensitivity so that multiple inspections with different magnetizations may be required; can only detect defects at or near surfaces; must demagnetize part after test; high current source is required; some surface processes can mask defects; postcleaning may be required.
Material limitations	Must be ferromagnetic; nonferrous metals such as aluminum, magnesium, copper, lead, tin, and titanium and the ferrous (but not ferromagnetic) austenitic stainless steels cannot be inspected.
Geometrical limitations	Size and shape are almost unlimited; most restrictions relate to the ability to induce uniform magnetic fields within the piece; hard to use on rough surfaces.
Permanent record	Photographs, videotapes, and inspectors' reports are most common. In addition, the defect pattern can be preserved on the specimen by an application of transparent lacquer or transferred to a piece of transparent tape that has been applied to the specimen and peeled off.

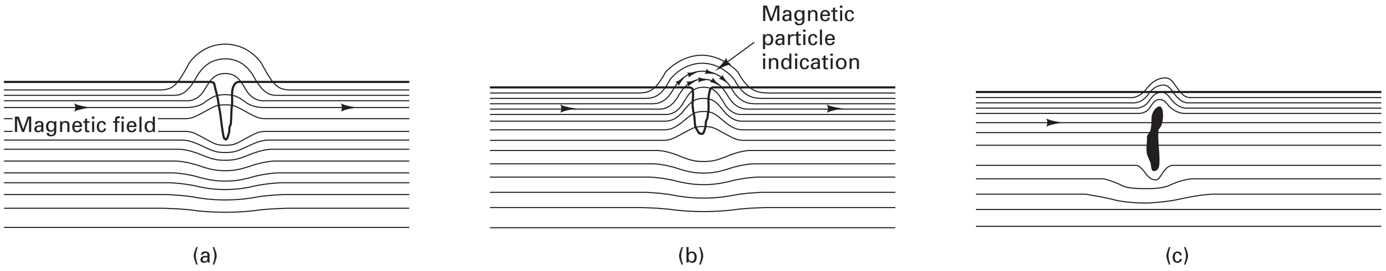

FIGURE 10-43 (a) Magnetic field showing disruption by a surface crack; (b) magnetic particles are applied and are preferentially attracted to field leakage; (c) subsurface defects can also produce surface-detectable disruptions if they are sufficiently close to the surface.

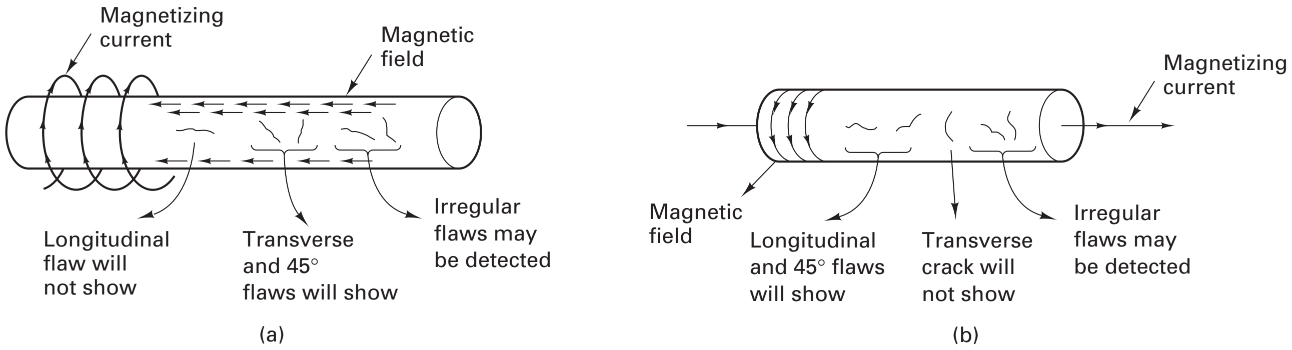

FIGURE 10-44 (a) A bar placed within a magnetizing coil will have an axial magnetic field. Defects parallel to this field may go unnoticed, while those that disrupt the field and are sufficiently close to a surface are likely to be detected. (b) When magnetized by a current passing through it, the bar has a circumferential magnetic field and the geometries of detectable flaws are reversed.

steel is placed within an energized coil, a magnetic field will be produced whose lines of flux travel along the axis of the bar. Any defect perpendicular to this axis will significantly alter the field. If the perturbation is sufficiently large and close enough to the surface, the flaw can be detected. However, if the flaw is in the form of a crack aligned with the specimen axis, there will be little perturbation of the lines of flux and the flaw is likely to go undetected. If the cylindrical specimen is then magnetized by passing a current through it, a circumferential magnetic field will be produced. Any axial defect now becomes a significant perturbation, and a defect perpendicular to the axis will likely go unnoticed. To fully inspect a product, therefore, a series of inspections may be required using various forms of magnetization. Passing a current between various points of contact is a popular means of inducing the desired fields. Electromagnetic coils of various shapes and sizes are also used. Alternating-current methods are most sensitive to surface flaws, while direct-current inspections are better for detecting subsurface defects, such as nonmetallic inclusions.

If the cylindrical specimen is then magnetized by passing a current through it, a circumferential magnetic field will be produced. Any axial defect now becomes a significant perturbation, and a defect perpendicular to the axis will likely go unnoticed. To fully inspect a product, therefore, a series of inspections may be required using various forms of magnetization. Passing a current between various points of contact is a popular means of inducing the desired fields. Electromagnetic coils of various shapes and sizes are also used. Alternating-current methods are most sensitive to surface flaws, while direct-current inspections are better for detecting subsurface defects, such as nonmetallic inclusions.

Once the specimen has been subjected to a magnetic field, magnetic particles are applied to the surface in the form of either a dry powder or a suspension in a liquid carrier. These particles are attracted to places where the lines of magnetic flux break the surface, revealing anomalies that can then be interpreted. To better reveal the orientation of the lines of flux, the particles are often made in an elongated form. They can also be

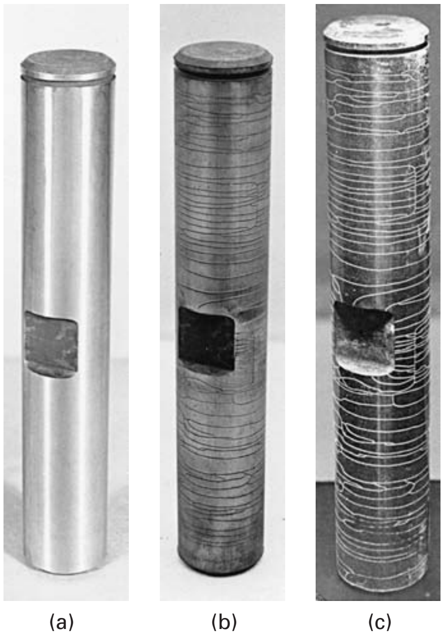
(a) (b) (c)

FIGURE 10-45 Front-axle king pin for a truck. (a) As manufactured and apparently sound; (b) inspected under conventional magnetic particle inspection to reveal numerous grinding-induced cracks; (c) fluorescent particles and ultraviolet light make the cracks even more visible. *(Courtesy of Magnaflux Corporation.)*

treated with a fluorescent material to enhance observation under ultraviolet light or coated with a lubricant to prevent oxidation and enhance their mobility. Figure 10-45 shows a component of a truck front-axle assembly: as manufactured, under straight magnetic particle inspection, and under ultraviolet light with fluorescent particles.

10.14 ULTRASONIC INSPECTION

Sound has long been used to provide an indication of product quality. A cracked bell will not ring true, but a fine crystal goblet will have a clear ring when lightly tapped. Striking an object and listening to the characteristic ring is an ancient art but is limited to the detection of large defects because the wavelength of audible sound is rather large compared to the size of most defects. By reducing the wavelength of the signal to the ultrasonic range, typically between 100,000 and 25 million hertz, ultrasonic inspection can be used to detect rather small defects and flaws.

As shown in Table 10-11, *ultrasonic inspection* involves sending high-frequency waves through a material and observing the response. Within the specimen, sound waves can be affected by voids, impurities, changes in density, delaminations, interfaces with materials having a different speed of sound, and other imperfections. At any interface, part of the ultrasonic wave will be reflected and part will be transmitted. If the incident beam

TABLE 10-11 Ultrasonic Inspection

Principle	High-frequency sound waves are propagated through a test specimen, and the transmitted or reflected signal is monitored and interpreted.
Advantage	Can reveal internal defects; high sensitivity to most cracks and flaws; high-speed test with immediate results; can be automated and recorded; portable; high penetration in most important materials (up to 60 ft in steel); indicates flaw size and location; access to only one side is required; can also be used to measure thickness, Poisson's ratio, or elastic modulus; presents no radiation or safety hazard.
Limitations	Difficult to use with complex shapes; external surfaces and defect orientation can affect the test (may need dual transducer or multiple inspections); a couplant is required; the area of coverage is small (inspection of large areas requires scanning); trained, experienced, and motivated technicians may be required.
Material limitations	Few can be used on metals, plastics, ceramics, glass, rubber, graphite, and concrete, as well as joints and interfaces between materials.
Geometric limitations	Small, thin, or complex-shaped parts or parts with rough surfaces and nonhomogeneous structure pose the greatest difficulty.
Permanent record	Ultrasonic signals can be recorded for subsequent playback and analysis. Strip charts can also be used.

is at an angle to an interface where materials change, the transmitted portion of the beam will be bent to a new angle by the phenomenon of refraction. By receiving and interpreting either transmitted or reflected signals, ultrasonic inspection can be used to detect flaws within the material, measure thickness from only one side, or characterize metallurgical structure.

An ultrasonic inspection system begins with a pulsed oscillator and *transducer*, a device that transforms electrical energy into mechanical vibrations. The pulsed oscillator generates a burst of alternating voltage, with a characteristic principal frequency, duration, profile, and repetition rate. This burst is then applied to a sending transducer, which uses a piezoelectric crystal to convert the electrical oscillations into mechanical vibrations. Because air is a poor transmitter of ultrasonic waves, an acoustic *coupling medium*—generally a liquid such as oil or water—is required to link the transducer to the piece to be inspected and transmit the vibrations into the part. The pulsed vibrations then propagate through the part with a velocity that depends on the density and elasticity of the test material. A receiving transducer is then used to convert the transmitted or reflected vibrations back into electrical signals. The receiving transducer is often identical to the sending unit, and the same transducer can actually perform both functions. A receiving unit then amplifies, filters, and processes the signal for display, possible recording, and final interpretation. An electronic clock is generally integrated into the system to time the responses and provide reference signals for comparison purposes.

Depending on the test objectives and part geometry, several different inspection methods can be employed:

1. In the *pulse-echo technique*, an ultrasonic pulse is introduced into the piece to be inspected, and the echoes from opposing surfaces and any intervening flaws are detected by the receiver. The time interval between the initial emitted pulse and the various echoes can be displayed on the horizontal axis of a display screen. Defects are identified by the position and amplitude of the various echoes. Figure 10-46 shows a schematic of a single-transducer pulse-echo inspection and the companion signal as it would appear on a display. Figure 10-47a depicts a dual-transducer pulse-echo examination. Both cases require access to only one side of the specimen.

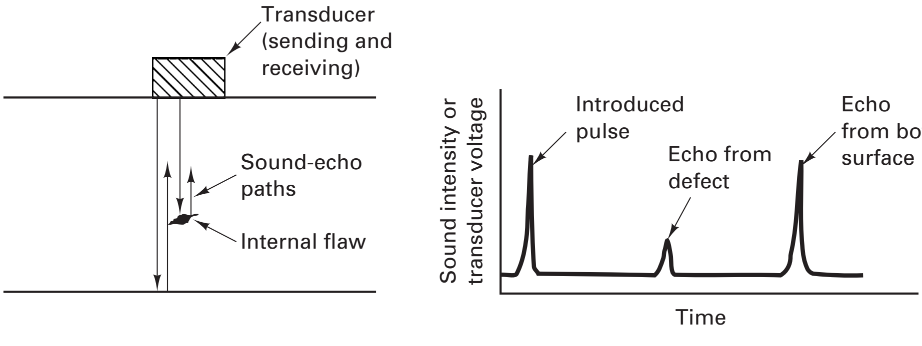

(a) (b)

FIGURE 10-46 (a) Ultrasonic inspection of a flat plate with a single transducer; (b) plot of sound intensity or transducer voltage versus time showing the initial pulse and echoes from the bottom surface and intervening defect.

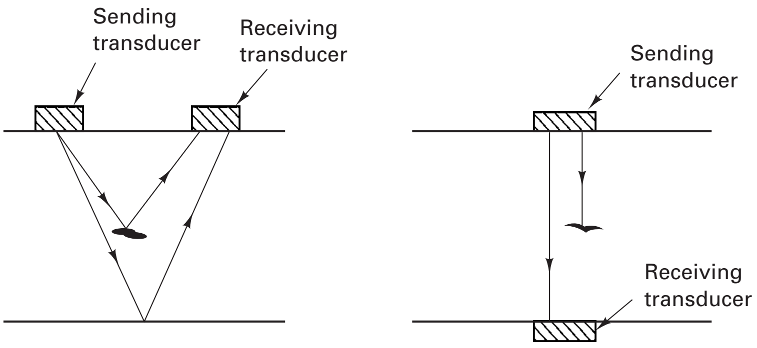

(a) (b)

FIGURE 10-47 (a) Dual-transducer ultrasonic inspection in the pulse-echo mode; (b) dual transducers in through-transmission configuration.

2. The *through-transmission technique* requires separate sending and receiving transducers. As shown in Figure 10-47b, a pulse is emitted by the sending transducer and detected by a receiver on the opposite surface. Flaws in the material decrease the amplitude of the transmitted signal because of back-reflection and scattering.
3. *Resonance testing* can be used to determine the thickness of a plate or sheet from one side of the material. Input pulses of varying frequency are fed into the material. When resonance is detected by an increase in energy at the transducer, the thickness can be calculated from the speed of sound in the material and the time of traverse. Ultrasonic thickness gages can be calibrated to provide direct digital readout of the thickness of a material.

Reference standards—specimens of known thickness or containing various types and sizes of machined "flaws"—are often used to ensure consistent results and aid in interpreting any indications of internal discontinuities.

10.15 RADIOGRAPHY

Radiographic inspection, summarized in Table 10-12, employs the same principles and techniques as those of medical X-rays. A shadow pattern is created when certain types of radiation (X-rays, gamma rays, or neutron beams) penetrate an object and are differentially absorbed due to variations in thickness, density, or chemistry, or the presence of defects in the specimen. The transmitted radiation is registered on a photographic film that provides a permanent record and a means of analyzing the component. Fluorescent screens can provide direct conversion of radiation into visible light and enable fast and inexpensive viewing without the need for film processing. The fluorescent image, however, usually does not offer the sensitivity of the photographic methods.

Various types of radiation can be used for inspection. X-rays are an extremely short wavelength form of electromagnetic radiation that are capable of penetrating many materials that reflect or absorb visible light. They are generated by a high-voltage electrical apparatus—the higher the voltage, the shorter the X-ray wavelength and the greater the energy and penetrating power of the beam. Gamma rays, another useful form of electromagnetic radiation, are emitted during the disintegration of radioactive nuclei. Various radioactive isotopes can be selected as the radiation source. Neutron beams for radiography can be obtained from nuclear reactors, nuclear accelerators, or radioisotopes. For most applications it is necessary to moderate the energy and collimate the beam before use.

The absorption of X-rays and gamma rays depends on the thickness, density, and atomic structure of the material being inspected. The higher the atomic number, the greater the attenuation of the beam. Figure 10-48 shows a radiograph of the historic Liberty Bell. The famous crack is clearly visible, along with the internal spider (installed to support the clapper in 1915) and the steel beam and bolts installed in the wooden yoke in 1929. Other radiographs disclosed previously unknown shrinkage separations and additional cracks in the bell, as well as a crack in the bell's clapper.

TABLE 10-12 Radiography

Principle	Some form of radiation (X-ray, gamma ray, or neutron beam) is passed through the sample and is differentially absorbed depending on the thickness, type of material, and the presence of internal flaws or defects.
Advantages	Probes the internal regions of a material; provides a permanent record of the inspection; can be used to determine the thickness of a material; very sensitive to density changes.
Limitations	Most costly of the NDT methods (involves expensive equipment); radiation precautions are necessary (potentially dangerous to human health); the defect must be at least 2% of the total section thickness to be detected (thin cracks can be missed if oriented perpendicular to the beam); film processing requires time, facilities, and care; the image is a two-dimensional projection of a three-dimensional object, so the location of an internal defect requires a second inspection at a different angle; complex shapes can present problems; a high degree of operator training is required.
Material limitations	Applicable to most engineering materials.
Geometric limitations	Complex shapes can present problems in setting exposure conditions and obtaining proper orientation of source, specimen, and film. Two-side accessibility is required.
Permanent record	A photographic image is part of the standard test procedure.

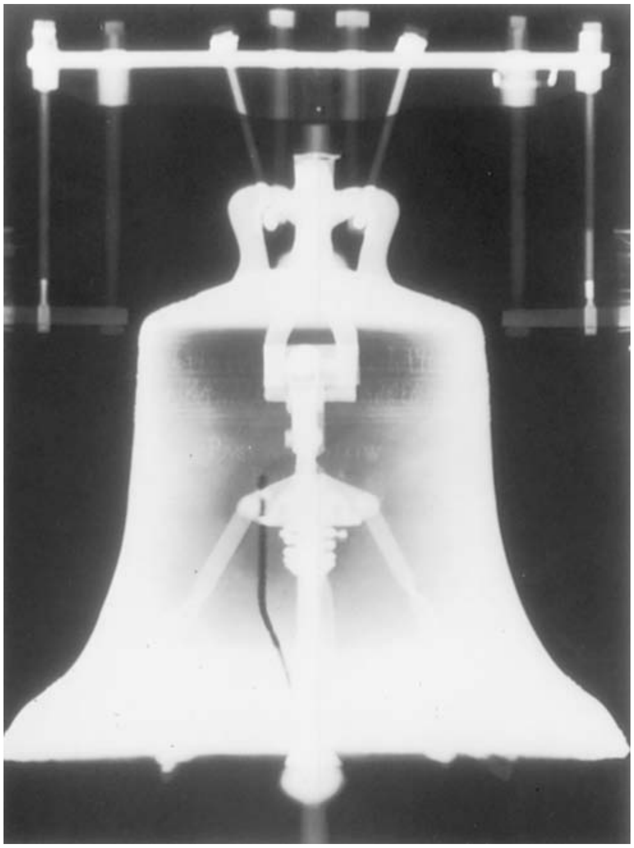

FIGURE 10-48 Radiograph of the Liberty Bell. The photo reveals the famous crack, as well as the iron spider installed in 1915 to support the clapper and the steel beam and supports, which were set into the yoke in 1929. *(Courtesy of Eastman Kodak Company.)*

In contrast to X-ray absorption, neutron absorption varies widely from atom to atom, with no pattern in terms of atomic number. Unusual contrasts can be obtained that would be impossible with other inspection methods. For example, hydrogen has a high neutron absorption. The presence of water in a product can be easily detected by neutron radiography. X-rays, on the other hand, are readily transmitted through water, and its presence could be missed.

When a radiation beam is passed through an object, part of the radiation is scattered in all directions. This scatter produces an overall "fogging" of the radiograph, reducing the contrast and sharpness of the image. The thicker the material, the more troublesome the scattered radiation becomes. Photographic considerations relating to the exposure time and development also affect the quality of the radiographic image. Image-enhancing computer software can help reveal the subtle but important variations in photographic density.

A standard test piece, or *penetrameter*, is often included in a radiographic exposure. Penetrameters are made of the same or similar material as the specimen and contain features with known dimensions. The image of the penetrameter is compared to the image of the product being inspected. Regions of similar intensity are considered to be of similar thickness.

Radiography is expensive, however. Many users, therefore, recommend extensive use only during the development of a new product or process, followed by spotchecks and statistical methods during subsequent production.

■ 10.16 EDDY-CURRENT TESTING

When an electrically conductive material is exposed to an alternating magnetic field such as that generated by a coil of wire carrying an alternating current, small electric currents are induced on or near the surface of the material (Figure 10-49). These induced *eddy currents*, in turn, generate their own opposing magnetic field, which then reduces the strength of the field from the coil. This change in magnetic field causes a change in the *impedance* of the coil, which in turn changes the magnitude

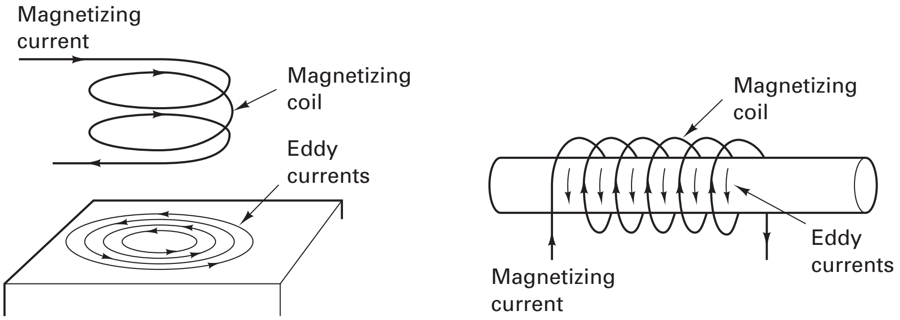

FIGURE 10-49 Relation of the magnetizing coil, magnetizing current, and induced eddy currents. The magnetizing current is actually an alternating current, producing a magnetic field that forms, collapses, and re-forms in the opposite direction. This dynamic magnetic field induces the eddy currents, and the changes in the eddy currents produce a secondary magnetic field that interacts with the sensor coil or probe.

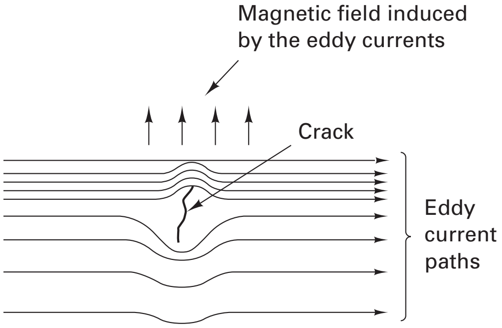

FIGURE 10-50 Eddy currents are constrained to travel within the conductive material, but the magnitude and path of the currents will be affected by defects and changes in material properties. By focusing on the magnitude of the eddy currents, features such as differences in heat treatment can be detected.

of the current flowing through it. By monitoring the impedance of the exciting coil, or a separate indicating coil, eddy-current testing can be used to detect any condition that would affect the current-carrying ability (or conductivity) of the test specimen. Figure 10-50 shows how the eddy-current paths would be forced to alter around a crack, thereby changing the characteristics of the induced magnetic field in that vicinity.

Eddy-current testing, summarized in Table 10-13, can be used to detect surface and near-surface flaws, such as cracks, voids, inclusions, and seams. Stress concentrations, differences in metal chemistry, or variations in heat treatment (i.e., microstructure and hardness) will all affect the magnetic permeability and conductivity of a metal and therefore alter the eddy-current characteristics. Material mix-ups and processing errors can therefore be detected. Specimens can be sorted by hardness, case depth, residual stresses, or any other structure-related property.

TABLE 10-13 Eddy-Current Testing

Principle	When an electrically conductive material is brought near an alternating-current coil that produces an alternating magnetic field, surface currents (eddy currents) are generated in the material. These surface currents generate their own magnetic field, which interacts with the original, modifying the impedance of the originating coil. Various material properties and/or defects can affect the magnitude and direction of the induced eddy currents and can be detected by the electronics.
Advantage	Can detect both surface and near-surface irregularities; applicable to both ferrous and nonferrous metals; versatile—can detect flaws; variations in alloy or heat treatment; variations in plating or coating thickness, wall thickness, and crack depth; intimate contact with the specimen is not required; can be automated; electrical circuitry can be adjusted to select sensitivity and function; pass–fail inspection is easily conducted; high speed; low cost; no final cleanup required.
Limitations	Response is sensitive to a number of variables, so interpretation may be difficult; sensitivity varies with depth, and depth of inspection depends on the test frequency; reference standards are needed for comparison; trained operators are generally required.
Material limitations	Only applicable to conductive materials, such as metals; some difficulties may be encountered with ferromagnetic materials.
Geometric limitations	Depth of penetration is limited; must have accessibility of coil or probe; constant separation distance between coils and specimen is required for good results.
Permanent record	Electronic signals can be recorded using devices such as strip-chart recorders.

Thickness (or variation in thickness) of platings, coatings, or even corrosion can be detected and measured.

Eddy-current test equipment can range from simple, portable units with handheld probes to fully automated systems with computer control and analysis. Each system includes a source of changing magnetic field capable of inducing eddy currents in the part being tested, a means of sensing the field, and a means of measuring and interpreting the resulting impedance changes. When comparing alternative techniques, eddy current is usually not as sensitive as penetrant testing in detecting small, open flaws, but it requires none of the cleanup operations and is noticeably faster. In a similar manner, it is not as sensitive as magnetic particle inspection to small subsurface flaws, but it can be applied to all metals (ferromagnetic and nonferromagnetic alike). In addition, eddy-current testing offers capabilities that cannot be duplicated by the other methods, such as the ability to differentiate between various chemistries and heat treatments.

10.17 ACOUSTIC EMISSION MONITORING

Materials experiencing the dynamic events of deformation or fracture emit stress waves in frequencies as high as 1 MHz. While these sounds are inaudible to the human ear, they are detectable through the use of sophisticated electronics. Transducers, amplifiers, filters, counters, and computers can be used to isolate and analyze the sonic emissions of a cracking or deforming material. Much like the warning sound of ice cracking underneath boots or skates, the acoustic emissions of materials can be used to provide a warning of impending danger. They can detect deformations as small as 10^{-12} in./in. (which occur in short intervals of time), initiation or propagation of cracks (including stress–corrosion cracking), delamination of layered materials, and fiber failure in composites. By using multiple sensors, it is possible to accurately pinpoint the source of these sounds by a triangulation method similar to that used to locate seismic sources (earthquakes) in the earth.

Acoustic emission monitoring, summarized in Table 10-14, involves listening for indications of failure. Temporary monitoring can be used to detect the formation of cracks in materials during production operations, such as welding and subsequent cooling of the weld region. Monitoring can also be employed to ensure the absence of plastic deformation during preservice proof testing. Continuous surveillance may be used when the product or component is particularly critical, as with bridges and nuclear reactor pressure vessels. The sensing electronics can be coupled to an alarm and safety system to protect and maintain the integrity of the structure.

In contrast to the previous inspection methods, acoustic emission cannot detect an existing defect in a static product. Instead, it is a monitoring technique designed to detect a dynamic change in the material, such as the formation or growth of a crack or defect, or the onset of plastic deformation.

TABLE 10-14 Acoustic Emission Monitoring

Principle	Almost all materials will emit high-frequency sound (acoustic emissions) when stressed, deformed, or undergoing structural changes, such as the formation or growth of a crack or defect. These emissions can now be detected and provide an indication of dynamic change within the material.
Advantages	The entire structure can be monitored with near-instantaneous detection and response; continuous surveillance is possible; defects inaccessible to other methods can be detected; inspection can be in harsh environments; and the location of the emission source can be determined.
Limitations	Only growing or "active" flaws can be detected (the mere presence of defects is not detectable); background signals may cause difficulty; there is no indication of the size or shape of the flaw; expensive equipment is required; and experience is required to interpret the signals.
Material limitations	Virtually unlimited, provided that they are capable of transmitting sound.
Geometric limitations	Requires continuous sound-transmitting path between the source and the detector. Size and shape of the component affect the strength of the emission signals that reach the detector.

10.18 OTHER METHODS OF NONDESTRUCTIVE TESTING AND INSPECTION

LEAK TESTING

Leak testing is a form of nondestructive testing designed to determine the existence or absence of leak sites and the rate of material loss through the leaks. Various testing methods have been developed, ranging from the rather crude bubble-emission test (pressurize, immerse, and look for bubbles), through simple pressure drop tests with either air or liquid as the pressurized media, to advanced techniques involving tracers, detectors, and sophisticated apparatus. Each has its characteristic advantages, limitations, and sensitivity. Selection should be on the basis of cost, sensitivity, reliability, and compatibility with the specific product to be tested.

THERMAL METHODS

Temperature-sensing devices (including thermometers, thermocouples, pyrometers, temperature-sensitive paints and coatings, liquid crystals, infrared scanners, infrared film, and others) can also be used to evaluate the soundness of engineering materials and components. Parts can be heated and then inspected during cool-down to reveal abnormal temperature distributions that are the result of faults or flaws. The identification of "hot spots" on an operating component is often an indication of a flaw or defect and may provide advanced warning of impending failure. For example, faulty electrical components tend to be hotter than defect-free devices. Composite materials (difficult to inspect by many standard techniques) can be subjected to brief pulses of intense heat and then inspected to reveal the temperature pattern produced by the subsequent thermal conductivity. Thermal anomalies tend to appear in areas where the bonding between the components is poor or incomplete. In another technique, ultrasonic waves are used to produce heat at internal defects, which are then detected by infrared examination.

STRAIN SENSING

Although used primarily during product development, strain-sensing techniques can also be used to provide valuable insight into the stresses and stress distribution within a part. Brittle coatings, photoelastic coatings, or electrical resistance strain gages can be applied to the external surfaces of a part, which are then subjected to an applied stress. The extent and nature of cracking, the photoelastic pattern produced, or the electrical resistance changes then provide insight into the strain at various locations. X-ray diffraction methods and extensometers have also been used.

ADVANCED OPTICAL METHODS

Although visual inspection is often the simplest and least expensive of the nondestructive inspection methods, there are also several advanced optical methods. Monochromatic laser light can be used to detect differences in the backscattered pattern from a part and a master. The presence or absence of geometrical features such as holes or gear teeth is readily detected. Holograms can provide three-dimensional images of an object, and holographic interferometry can detect minute changes in the shape of an object under stress.

RESISTIVITY METHODS

The *electrical resistivity* of a conductive material is a function of its chemistry, processing history, and structural soundness. Measurement of resistivity can therefore be used for alloy identification, flaw detection, or the ensurance of proper processing. Tests can be developed to evaluate the effects of heat treatment, the amount of cold work, the integrity of welds, or the depth of case hardening. The development of sensitive microohmmeters has greatly expanded the possibilities in this area.

COMPUTED TOMOGRAPHY

While X-ray radiography provides a single image of the X-ray intensity being transmitted through an object, X-ray *computed tomography* (CT) is an inspection technique that provides a cross-sectional view of the interior of an object along a plane parallel to the X-ray beam. This is the same technology that has revolutionized medical diagnostic imaging (CAT scans), with the process parameters (such as the energy of the X-ray source) being adapted to permit the nondestructive probing of industrial products. Basic systems include an X-ray source, an array of detectors, a mechanical system to move and rotate the test object, and a dedicated computer system. The intensity of the received signal is recorded at each of the numerous detectors with the part in a variety of orientations. Complex numerical algorithms are then used to construct an image of the interior of the component. Internal boundaries and surfaces can be determined clearly, enabling inspection and dimensional analysis of a product's interior. The presence of cracks, voids, or inclusions can also be detected, and their precise location can be determined.

CT inspections are slow and costly, so they are currently used only when the component is critical and the more standard inspection methods prove to be inadequate due to features such as shape complexity, thick walls, or poor resolution of detail. The video images of the CT technique also permit easy visualization and interpretation.

Acoustic holography is another computer reconstruction technique, this time based on ultrasound reflections from within the part.

CHEMICAL ANALYSIS AND SURFACE TOPOGRAPHY

While nondestructive inspection is usually associated with the detection of flaws and defects, various nondestructive techniques can also be employed to determine the chemical and elemental analysis of surface and near-surface material. These techniques include Auger electron spectroscopy (AES), energy-dispersive X-ray analysis (EDX), electron spectroscopy for chemical analysis (ESCA), and various forms of secondary-ion mass spectroscopy (SIMS). Because of its large depth of focus, the scanning electron microscope has become an extremely useful tool for observing the surfaces of materials. More recently, the atomic-force microscope and scanning tunneling microscope have extended this capability and can now provide information about surface topography with resolution to the atomic scale.

10.19 DORMANT VERSUS CRITICAL FLAWS

There was a time when the detection of a flaw was considered to be sufficient cause for rejecting a material or component, and material specifications often contained the term *flaw-free*. Such a criterion, however, is no longer practical, because the sensitivity of detection methods has increased dramatically. If materials were rejected upon detection of a flaw, we would find ourselves rejecting nearly all commercial engineering materials. If a defect is sufficiently small, it is possible for it to remain dormant throughout the useful lifetime of a product, never changing in size or shape. Such a defect is clearly allowable. Larger defects, or defects of a more undesirable geometry, may grow or propagate under the same (cyclic) conditions of loading, often causing sudden or catastrophic failure. These flaws would be clearly unacceptable. The objective (or challenge), therefore, is to identify the conditions below which a flaw remains *dormant* and above which it becomes *critical* and a cause for rejection. This issue is addressed in the section on "Fracture Toughness and the Fracture Mechanics Approach" in Chapter 2.

Key Words

accuracy
acoustic holography
acoustic emission
allowance
ampere
attributes
candela
clearance fit
computed tomography
coordinate measuring machine
coupling medium
critical flaw
destructive testing
dormant flaw
drift
eddy-current testing
electrical resistivity
flaw-free
gage blocks
geometric tolerances
hardness testing
impedance
interference bands
interference fit
laser interferometer
lay
leak testing
length
linearity
liquid penetrant testing
machinist's rule
magnetic particle inspection
magnification
mass
metrology
micrometer caliper
nondestructive testing (also nondestructive inspection)
optical comparator
penetrameter
penetrant
plug gage
precision

proof test
pulse-echo method
radiographic inspection
resolution
resonance testing
ring gage
rule of 10
sine bar
snap gage
stability
super micrometer
temperature
through transmission technique
time
tolerance
tomography
toolmaker's flat
toolmaker's microscope
transducer
ultrasonic inspection
variables
vernier caliper
vision system
visual inspection

Review Questions

1. What are some of the advantages to the consumer of standardization and of interchangeable parts?
2. *DFM* stands for "design for manufacturing." Why is it important for designers to interface with manufacturing as early as possible with the design phase?
3. Explain the difference between attributes and variables inspection.
4. Why have so many variable-type devices in autos been replaced with attribute-type devices?
5. What are the four basic measures upon which all others depend?
6. What is a pascal, and how is it made up of the basic measures?
7. What are the different grades of gage blocks, and why do they come in sets?
8. When gage blocks are "wrung together," what keeps them together?
9. What is the difference between tolerance and allowance?
10. Here is a table that provides a description of fits from clearance to interference. Try to think of an example of each of these fits.

	ISO Symbol		Example
	Hole Basis	Shaft Basis	
Clearance Fits	H11/c11	C11/h11	*Loose-running fit:* for wide commercial tolerances or allowances on external members
	H9/d9	D9/h9	*Free-running fit:* not for use where accuracy is essential, but good for large temperature variations
	H8/f7	F8/h7	*Close-running fit:* for running on accurate machines and for accurate location at moderate speeds and journal pressures
	H7/g6	G7/h6	*Sliding fit:* not intended to run freely, but to move and turn freely and locate accurately
	H7/h6	H7/h6	*Locational-clearance fit:* provides snug fit for locating stationary parts, but can be freely assembled and disassembled
Transition Fits	H7/k6	K7/h6	*Locational-transition fit:* for accurate location; a compromise between clearance and interference
	H7/n6	N7/h6	*Locational-transition fit:* for more accurate location where greater interference is permissible
	H7/p6	P7/h6	*Locational-interference fit:* for parts requiring rigidity and alignment with prime accuracy of location, but without special bore pressure requirements
Interference Fits	H7/s6	S7/h6	*Medium-drive fit:* for ordinary steel parts or shrink fits on light sections; the tightest fit usable with cast iron
	H7/u6	U7/h6	*Force fit:* for highly stressed parts or for shrink fits where the heavy pressing forces required are impractical

11. What type of fit would describe the following situations.
    a. The cap of a ball-point pen
    b. The lead in a mechanical lead pencil, at the tip
    c. The bullet in a barrel of a gun
12. What does the word *shrink* imply in a shrink fit?
13. Why might you use a shrink fit to join the wheels of trains to the axle rather than welding them?
14. Explain the difference between accuracy and precision.
15. When measuring time, is it more important to be accurate or precise? Why?
16. Into which of the five basic kinds of inspection does interferometry fall?
17. What factors should be considered in selecting measurement equipment?
18. Explain what is meant by the statement that usable magnification is limited by the resolution of the device.
19. What is parallax? (Why do linesmen in tennis sit looking down the line?)
20. What is the rule of 10?
21. How does the vernier caliper work to make measurements?
22. What are the two most likely sources of error in using a micrometer caliper?
23. What is the major disadvantage of a micrometer caliper as compared with a vernier caliper?
24. What is the main advantage of a micrometer over the vernier caliper?
25. What would be the major difficulty in obtaining an accurate measurement with a micrometer depth gage if it were not equipped with a ratchet or friction device for turning the thimble?
26. Why is the toolmaker's microscope particularly useful for making measurements on delicate parts?

27. In what two ways can linear measurements be made using an optical projector?
28. What type of instrument would you select for checking the accuracy of the linear movement of a machine tool table through a distance of 50 inches?
29. What are the chief disadvantages of using a vision system for measurement compared to laser scanning?
30. What is a CMM (coordinate measuring machine)?
31. What is the principle of a sine bar?
32. How can the no-go member of a plug gage be easily distinguished from the go member?
33. What is the primary precaution that should be observed in using a dial gage?
34. What tolerances are added to gages when they are being designed?
35. Explain how a go/no-go ring gage works for check a shaft.
36. Why are air gages particularly well suited for gaging the diameter of a hole?
37. Explain the principle of measurement by light-wave interference.
38. How does a toolmaker's flat differ from an optical flat?
39. Why must quality decisions derived from destructive testing be made on a statistical basis?
40. What is a proof test, and what assurance does it provide?
41. What quality-related features can a hardness test reasonably ensure?
42. What exactly is nondestructive testing, and what are some attractive features of the approach?
43. What are some possible objectives of nondestructive testing?
44. What are some factors that should be considered when selecting a nondestructive testing method?
45. How might the costs of nondestructive testing actually be considered as an asset rather than a liability?
46. Why should visual inspection be considered as the initial and primary means of inspection?
47. What is the primary limitation of a visual inspection?
48. What types of defects can be detected in a liquid penetrant test?
49. What is the primary materials-related limitation of magnetic particle inspection?
50. Describe how the orientation of a flaw with respect to a magnetic field can affect its detectability during magnetic particle inspection.
51. What is the major limitation of sonic testing, where one listens to the characteristic ring of a product in an attempt to detect defects?
52. What is the role of a coupling medium in ultrasonic inspection?
53. What are three types of ultrasonic inspection methods?
54. What types of radiation can be used in radiographic inspection of manufactured products?
55. What are penetrameters, and how are they used in radiographic inspection?
56. While radiographs offer a graphic image that looks like the part being examined, the technique has some significant limitations. What are some of these limitations?
57. Why would we not use eddy-current inspection with ceramics or polymeric materials?
58. What types of detection capabilities are offered by eddy-current inspection that cannot be duplicated by the other methods?
59. Why can't acoustic emission methods be used to detect the presence of an existing but static defect?
60. How can acoustic emission be used to determine the location of a flaw or defect?
61. How can temperature be used to reveal defects?
62. What kinds of product features can be evaluated by electrical resistivity methods?
63. What type of information can be obtained through computed tomography?
64. What are some of the techniques that can be used to determine the chemical composition of surface and near-surface material?
65. Why is it important to determine the distinction between allowable and critical flaws, as opposed to rejecting all materials that contain detectable flaws?

■ Problems

1. Read the 25-division vernier graduated in English (Figure 10-A).
2. Read the 25-division vernier graduated in metric (direct reading) (Figure 10-B).

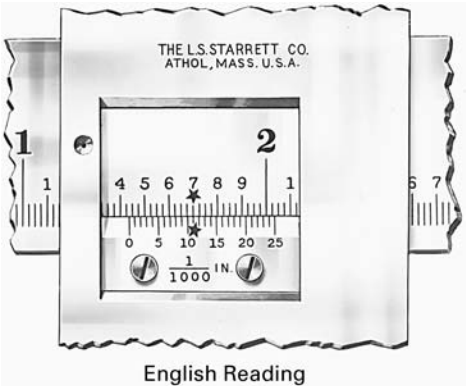

FIGURE 10-A

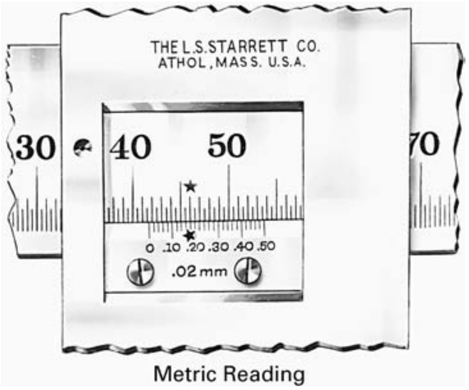

FIGURE 10-B

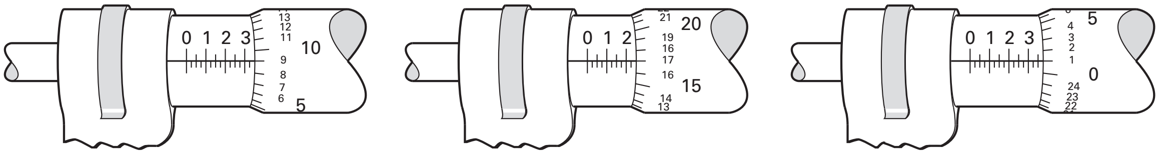

FIGURE 10-C

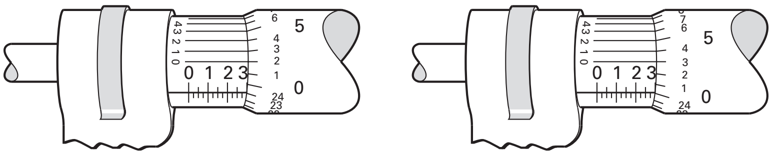

FIGURE 10-D

3. Convert the larger of the two readings to units of the smaller and subtract.
4. Suppose that in Figure 10-33 the height of the gage blocks are 3.2500 in. What is the angle θ assuming that the dial indicator is reading zero?
5. What is the estimated error in this measurement, given that Grade 3 working gage blocks are being used?
6. In Figure 10-C, the sleeve-thimble region of three micrometers graduated in thousandths of an inch are shown. What are the readings for these three micrometers? (*Hint:* Think of the various units as if you were making change from a $10 bill. Count the figures on the sleeve as dollars, the vertical lines on the sleeve as quarters, and the divisions on the thimble as cents. Add up your change, and put a decimal point instead of a dollar sign in front of the figures.)
7. Figure 10-D shows the sleeve-thimble region of two micrometers graduated in thousandths of an inch with a vernier for an additional ten-thousandths. What are the readings?
8. In Figure 10-E, two examples of a metric vernier micrometer are shown. The micrometer is graduated in hundredths of a millimeter (0.01 mm), and an additional reading in two-thousandths of a millimeter (0.002 mm) is obtained from vernier on the sleeve. What are the readings?
9. Progress in machine tool technology over the last 100 years has led to the continual redefinition of precision as shown in Figure 10-F, developed by Taniguchi. The trend here is very clear—that precision in machining continues to improve over time and approaches some limit. Discuss this figure, addressing such issues as
   - 9.1 What is the limit in machining precision?
   - 9.2 The vertical axis of the plot uses the term *accuracy,* while the curves use the term *precision*. Are these the same? Explain.
   - 9.3 What is nanoprocessing? Give some examples.
   - 9.4 What is the current industrial level of precision for machine tools?
   - 9.5 What is the correct title for the vertical axis on this figure?

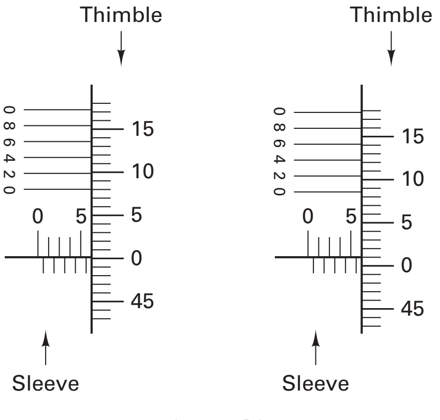

FIGURE 10-E

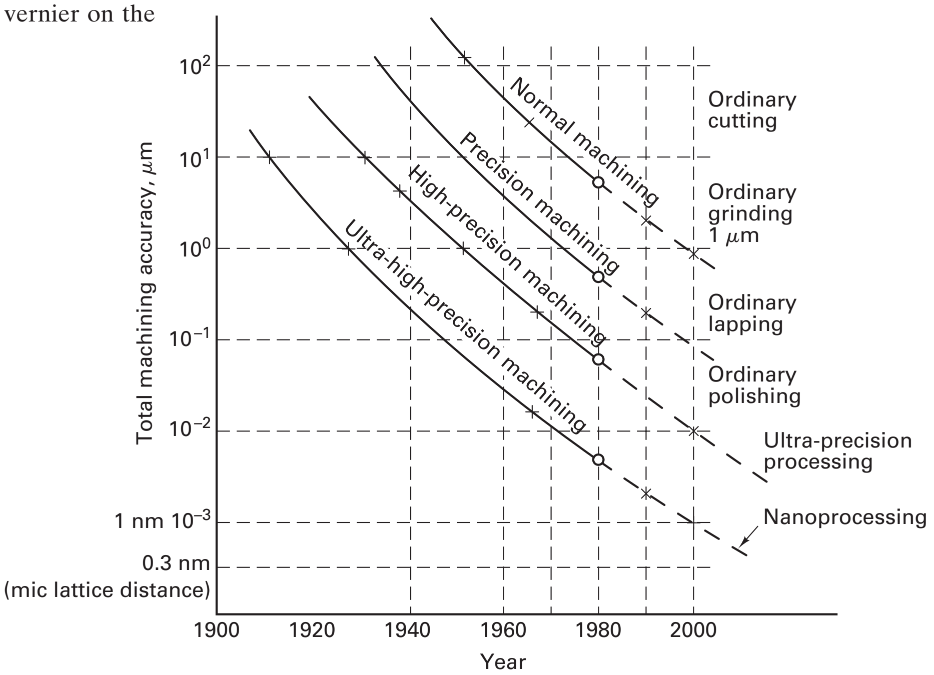

FIGURE 10-F

10. What processes might be grouped into the nanotechnology field? For example, what level of precision is needed in a CD player or an artificial joint?
11. Suppose you had a 2-ft steel bar in your supermicrometer. Could you detect a length change if the temperature of the bar changed by 20°F?
12. Figure 10-G shows a section of a vernier caliper. What is the reading for the outside caliper?

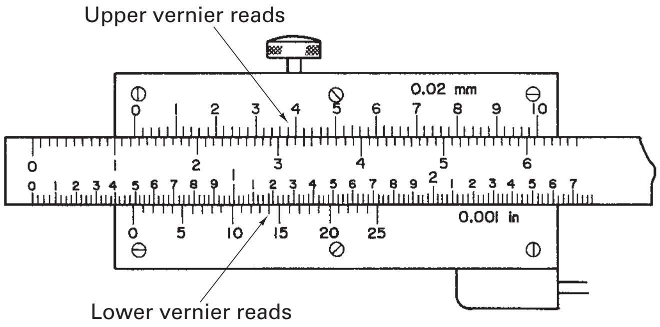

FIGURE 10-G

13. For each of the inspection methods listed below, cite one majo limitation to its use.
    a. Visual inspection
    b. Liquid penetrant inspection
    c. Magnetic particle inspection
    d. Ultrasonic inspection
    e. Radiography
    f. Eddy-current testing
    g. Acoustic emission monitoring
14. Which of the major nondestructive inspection methods might you want to consider if you want to detect (1) surface flaws and (2) internal flaws in products made from each of the following materials?
    a. Ceramics
    b. Polymers
    c. Fiber-reinforced composites with (i) polymer matrix and (ii) metal matrix (Consider various fiber materials.)
15. Discuss the application of nondestructive inspection methods to powder metallurgy (metallic) products with low, average, and high density.

www.wiley.com/college/degarmo

Chapter 10 CASE STUDY

Measuring an Angle

Figure CS-10a, shows a part drawing. After the part is made, θ needs to be inspected. The quality engineer, Kavit, suggested the setup shown in Figure CS-10b. (No sine plate was available.)

(a) Determine the angle from the part drawing and the value of *X* for the stack of gage blocks.

(b) What blocks would you use in the stack to get the total to "*X*"? (You will have to find a box of gage blocks.)

(c) Suggest another way to check this angle (no sine plate, or gage blocks).

(d) Show the setup you would use if you had a sine plate.

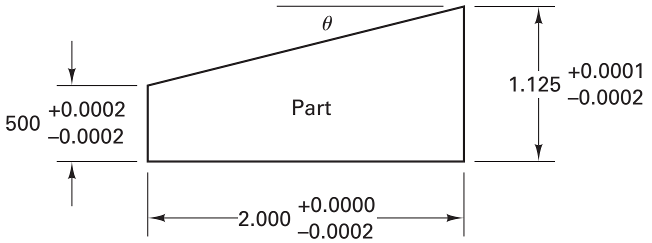

FIGURE CS-10A Part drawing

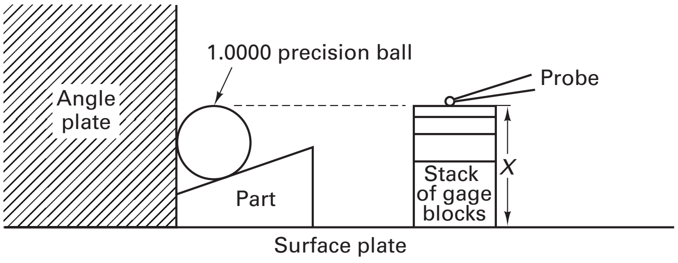

FIGURE CS-10B Setup for checking the angle θ

CHAPTER 11

FUNDAMENTALS OF CASTING

11.1 INTRODUCTION TO MATERIALS PROCESSING

Almost every manufactured product (or component of a product) goes through a series of activities that include (1) design, defining what we want to produce, (2) material selection, (3) process selection, (4) manufacture, (5) inspection and evaluation, and (6) feedback. Previous chapters have presented the fundamentals of *materials engineering,* the study of the structure, properties, processing, and performance of engineering materials and the systems interactions among these aspects. Other chapters address the use of heat treatment to achieve desired properties and the use of surface treatments to alter features such as wear or corrosion resistance. In this chapter, we begin a focus on *materials processing,* the science and technology through which a material is converted into a useful shape with structure and properties that are optimized for the proposed service environment. A less technical definition of materials processing might be "whatever must be done to convert stuff into things."

A primary objective of materials processing is the production of a desired shape in the desired quantity. Shape-producing processes are often grouped into four basic "families," as indicated in Figure 11-1. *Casting processes* exploit the properties of a liquid as it flows into and assumes the shape of a prepared container, and then solidifies upon cooling. The *material removal processes* remove selected segments from an initially oversized piece. Traditionally, these processes have often been referred to as *machining*, a term used to describe the mechanical cutting of materials. The more general term, *material removal,* includes a wide variety of techniques, including those based on chemical, thermal, and physical processes. *Deformation processes* exploit the ductility or plasticity of certain materials, mostly metals, and produce the desired shape by mechanically moving or rearranging the solid. *Consolidation processes* build a desired shape by putting smaller pieces together. Included here are welding, brazing, soldering, adhesive bonding, and mechanical fasteners. *Powder metallurgy* is the manufacture of a desired shape from particulate material, a definite form of consolidation, but can also involve aspects of casting and forming.

Each of the four basic families has distinct advantages and limitations, and the various processes within the families have their own unique characteristics. For example, cast products can have extremely complex shapes, but also possess structures that are produced by solidification and are therefore subject to such defects as shrinkage and porosity. Material removal processes are capable of outstanding dimensional precision but produce scrap when material is cut away to produce the desired shape. Deformation processes can have high rates of production but generally require powerful equipment and dedicated tools or dies. Complex products can often be assembled from simple shapes, but the joint areas are often affected by the joining process and may possess characteristics different from the original base material.

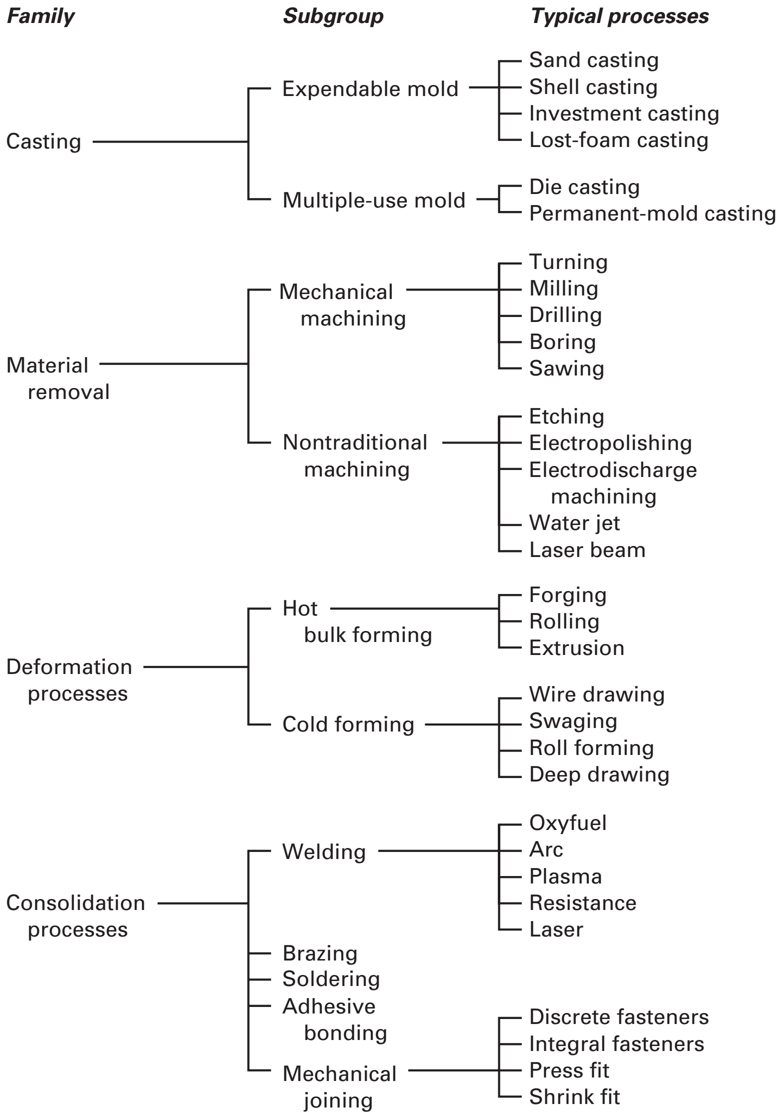

FIGURE 11-1 The four materials processing families, with subgroups and typical processes.

When selecting the process or processes to be used in obtaining a desired shape and achieving the desired properties, decisions should be made with the knowledge of all available alternatives and their associated assets and limitations. A large portion of this book is dedicated to presenting the various processes that can be applied to engineering materials. They are grouped according to the four basic categories, with powder metallurgy being included at the end of the section on deformation process. The emphasis is on process fundamentals, descriptions of the various alternatives, and an assessment of associated assets and limitations. We will begin with a survey of the casting processes.

■ 11.2 INTRODUCTION TO CASTING

In the *casting* processes, a material is first melted, heated to proper temperature, and sometimes treated to modify its chemical composition. The molten material is then poured into a cavity or mold that holds it in the desired shape during cool-down and solidification. In a single step, simple or complex shapes can be made from any material that can be melted. By proper design and process control, the resistance to working stresses can be optimized and a pleasing appearance can be produced.

Cast parts range in size from a fraction of a centimeter and a fraction of a gram (such as the individual teeth on a zipper) to over 10 meters and many tons (as in the huge propellers and stern frames of ocean liners). Moreover, the casting processes have distinct advantages when the production involves complex shapes, parts having hollow sections or internal cavities, parts that contain irregular curved surfaces (except those that can be made from thin sheet metal), very large parts, or parts made from metals that are difficult to machine.

It is almost impossible to design a part that cannot be cast by one or more of the commercial casting processes. However, as with all manufacturing techniques, the best results and lowest cost are only achieved if the designer understands the various options and tailors the design to use the most appropriate process in the most efficient manner. The variety of casting processes use different mold materials (sand, metal, or various ceramics) and pouring methods (gravity, vacuum, low pressure, or high pressure). All share the requirement that the material should solidify in a manner that will maximize the properties and avoid the formation of defects, such as shrinkage voids, gas porosity, and trapped inclusions.

BASIC REQUIREMENTS OF CASTING PROCESSES

Six basic steps are present in most casting processes:

1. A container must be produced with a *mold cavity*, having the desired shape and size, with due allowance for shrinkage of the solidifying material. Any geometrical feature desired in the finished casting must be present in the cavity. The mold material must provide the desired detail and also withstand the high temperatures and not contaminate the molten material that it will contain. In some processes, a new mold is prepared for each casting (single-use molds) while in other processes, the mold is made from a material that can withstand repeated use, such as metal or graphite. The *multiple-use molds* tend to be quite costly and are generally employed with products where large quantities are desired. The more economical *single-use molds* are usually preferred for the production of smaller quantities but may be required when casting the higher-melting-temperature materials.
2. A *melting process* must be capable of providing molten material at the proper temperature, in the desired quantity, with acceptable quality, and at a reasonable cost.
3. A *pouring technique* must be devised to introduce the molten metal into the mold. Provision should be made for the escape of all air or gases present in the cavity prior to pouring, as well as those generated by the introduction of the hot metal. The molten material must be free to fill the cavity, producing a high-quality casting that is fully dense and free of defects.
4. The *solidification process* should be properly designed and controlled. Castings should be designed so that solidification and solidification shrinkage can occur without producing internal porosity or voids. In addition, the molds should not provide excessive restraint to the shrinkage that accompanies cooling, a feature that may cause the casting to crack when it is still hot and its strength is low.
5. It must be possible to remove the casting from the mold (i.e., *mold removal*). With single-use molds that are broken apart and destroyed after each casting, mold removal presents no serious difficulty. With multiple-use molds, however, the removal of a complex-shaped casting may be a major design problem.
6. Various *cleaning, finishing, and inspection* operations may be required after the casting is removed from the mold. Extraneous material is usually attached where the metal entered the cavity, excess material may be present along mold parting lines, and mold material may adhere to the casting surface. All of these must be removed from the finished casting.

Each of the six steps will be considered in more detail as we move through the chapter. The fundamentals of solidification, pattern design, gating, and risering will all be developed. Various defects will also be considered, together with their causes and cures.

11.3 CASTING TERMINOLOGY

Before we proceed to the process fundamentals, it is helpful to first become familiar with a bit of casting vocabulary. Figure 11-2 shows a two-part mold, its cross section, and a variety of features or components that are present in a typical casting process. To produce a casting, we begin by constructing a *pattern*, an approximate duplicate of the final casting. *Molding material* will then be packed around the pattern and the pattern is removed to create all or part of the mold cavity. The rigid metal or wood frame that holds the molding aggregate is called a *flask*. In a horizontally parted two-part mold, the top half of the pattern, flask, mold, or core is called the *cope*. The bottom half of any of these features is called the *drag*. A *core* is a sand (or metal) shape that is inserted into a mold to produce the internal features of a casting, such as holes or passages for water cooling. Cores are produced in wood, metal, or plastic tooling, known as *core boxes*. A *core print* is a feature that is added to a pattern, core, or mold and is used to locate and support a core within the mold. The mold material and the cores then combine to produce a completed *mold cavity*, a shaped hole into which the molten metal is poured and solidified to produce the desired casting. A *riser* is an additional void in the mold that also fills with molten metal. Its purpose is to provide a reservoir of additional liquid that can flow into the mold cavity to compensate for any shrinkage that occurs during solidification. By designing so the riser contains the last material to solidify, shrinkage voids should be located in the riser, not the final casting.

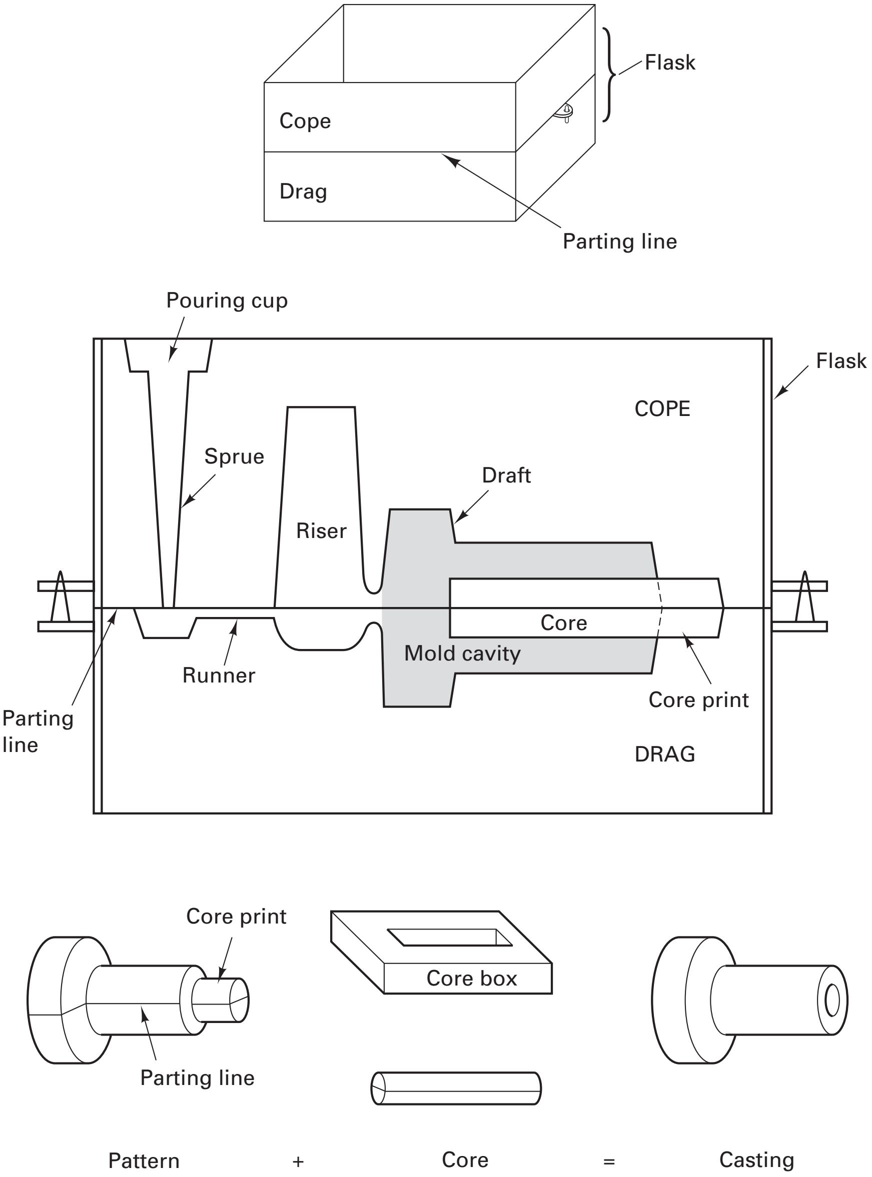

FIGURE 11-2 Cross section of a typical two-part sand mold, indicating various mold components and terminology.

The network of connected channels used to deliver the molten metal to the mold cavity is known as the *gating system*. The *pouring cup* (or pouring basin) is the portion of the gating system that receives the molten metal from the pouring vessel and controls its delivery to the rest of the mold. From the pouring cup, the metal travels down a *sprue* (the vertical portion of the gating system), then along horizontal channels, called *runners*, and finally through controlled entrances, or *gates*, into the mold cavity. Additional channels, known as *vents*, may be included in a mold or core to provide an escape for the gases that are originally present in the mold or are generated during the pour. (These and other features of a gating system will be discussed later in the chapter and are illustrated in Figure 11-9.)

The *parting line* or *parting surface* is the interface that separates the cope and drag halves of a mold, flask, or pattern, and also the halves of a core in some core-making processes. *Draft* is the term used to describe the taper on a pattern or casting that permits it to be withdrawn from the mold. The draft usually expands toward the parting line. Finally, the term *casting* is used to describe both the process and the product when molten metal is poured and solidified in a mold.

11.4 THE SOLIDIFICATION PROCESS

Casting is a *solidification process* where the molten material is poured into a mold and then allowed to freeze into the desired final shape. Many of the structural features that ultimately control product properties are set during solidification. Furthermore, many casting defects, such as *gas porosity* and *solidification shrinkage*, are also solidification phenomena, and they can be reduced or eliminated by controlling the solidification process.

Solidification is a two-stage, nucleation and growth, process, and it is important to control both of these stages. *Nucleation* occurs when stable particles of solid form from within the molten liquid. When a material is at a temperature below its melting point, the solid state has a lower energy than the liquid. As solidification occurs, internal energy is released. At the same time, however, interface surfaces must be created between the new solid and the parent liquid. Formation of these surfaces requires energy. In order for nucleation to occur, there must be a net reduction or release of energy. As a result, nucleation generally begins at a temperature somewhat below the equilibrium melting point (the temperature where the internal energies of the liquid and solid are equal). The difference between the melting point and the actual temperature of nucleation is known as the amount of *undercooling*.

If nucleation can occur on some form of existing surface, it no longer requires the creation of a full, surrounding interface, and the required energy is reduced. Such surfaces are usually present in the form of mold or container walls, or solid impurity particles contained within the molten liquid. When ice cubes are formed in a tray, the initial solid forms on the walls of the container. The same phenomena can be expected with metals and other engineering materials.

Each nucleation event produces a crystal or grain in the final casting. Since fine-grained materials (many small grains) possess enhanced mechanical properties, efforts may be made to promote nucleation. Particles of existing solid may be introduced into the liquid before it is poured into the mold. These particles provide the surfaces required for nucleation and promote the formation of a uniform, fine-grained product. This practice of introducing solid particles is known as *inoculation* or *grain refinement*.

The second stage in the solidification process is *growth*, which occurs as the heat of fusion is extracted from the liquid material. The direction, rate, and type of growth can be controlled by the way in which this heat is removed. *Directional solidification*, in which the solidification interface sweeps continuously through the material, can be used to assure the production of a sound casting. The molten material on the liquid side of the interface can flow into the mold to continuously compensate for the shrinkage that occurs as the material changes from liquid to solid. The relative rates of nucleation and growth control the size and shape of the resulting crystals. Faster rates of cooling generally produce products with finer grain size and superior mechanical properties.

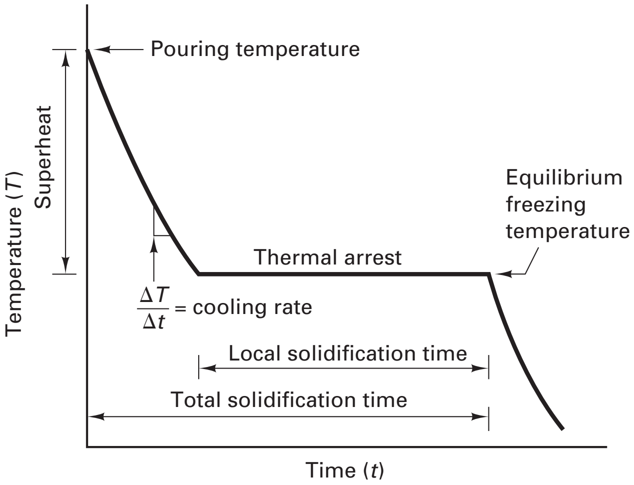

FIGURE 11-3 Cooling curve for a pure metal or eutectic-composition alloy (metals with a distinct freezing point), indicating major features related to solidification.

COOLING CURVES

Cooling curves, such as those introduced in Chapter 4, can be one of the most useful tools for studying the solidification process. By inserting thermocouples into a casting and recording the temperature versus time, one can obtain valuable insight into what is happening in the various regions.

Figure 11-3 shows a typical cooling curve for a pure or eutectic-composition material (one with a distinct melting point) and is useful for depicting many of the features and terms related to solidification. The *pouring temperature* is the temperature of the liquid metal when it first enters the mold. *Superheat* is the difference between the pouring temperature and the freezing temperature of the material. Most metals are poured at temperatures of 100–200°C (200–400°F) above the temperature where solid begins to form. The higher the superheat, the more time is given for the material to flow into the intricate details of the mold cavity before it begins to freeze. The *cooling rate* is the rate at which the liquid or solid is cooling and can be viewed as the slope of the cooling curve at any given point. The *thermal arrest* is the plateau in the cooling curve that occurs during the solidification of a material with fixed melting point. At this temperature, the energy or heat being removed from the mold comes from the latent heat of fusion that is being released during the solidification process. The time from the start of pouring to the end of solidification is known as the *total solidification time*. The time from the start of solidification to the end of solidification is the *local solidification time*.

If the metal or alloy being cast does not have a distinct melting point, such as the one shown in Figure 11-4, solidification will occur over a range of temperatures. The *liquidus* temperature is the lowest temperature where the material is all liquid, and the *solidus* temperature is the highest temperature where it is all solid. The region between the *liquidus* and *solidus* temperatures is known as the *freezing range*. The onset and termination of solidification appear as slope changes in the cooling curve.

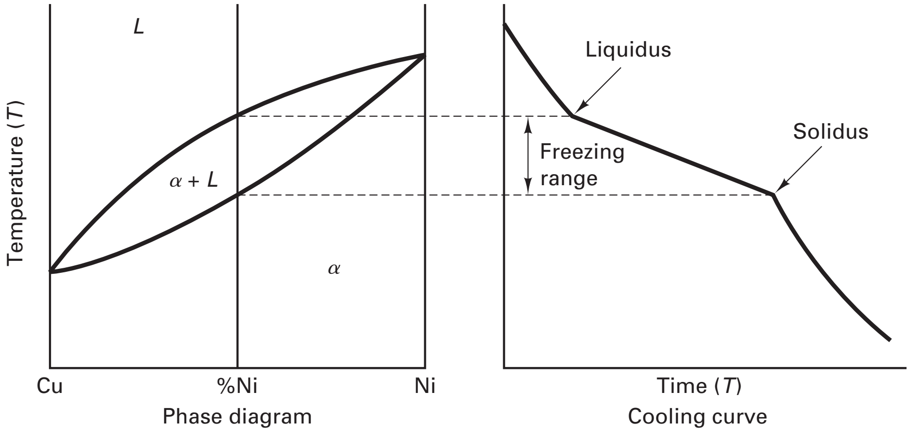

FIGURE 11-4 Phase diagram and companion cooling curve for an alloy with a freezing range. The slope changes indicate the onset and termination of solidification.

The actual form of a cooling curve will depend on the type of material being poured, the nature of the nucleation process, and the rate and means of heat removal from the mold. By analyzing experimental cooling curves, we can gain valuable insight into both the casting process and the cast product. Fast cooling rates and short solidification times generally lead to finer structures and improved mechanical properties.

PREDICTION OF SOLIDIFICATION TIME: CHVORINOV'S RULE

The amount of heat that must be removed from a casting to cause it to solidify depends upon both the amount of superheating and the volume of metal in the casting. Conversely, the ability to remove heat from a casting is directly related to the amount of exposed surface area through which the heat can be extracted and the environment surrounding the molten material (i.e., the mold and mold surroundings). These observations are reflected in *Chvorinov's rule,*[1] which states that the total solidification time, t_s, can be computed by:

$$t_s = B\,(V/A)^n \text{ where } n = 1.5 \text{ to } 2.0$$

The total solidification time, t_s, is the time from pouring to the completion of solidification; V is the volume of the casting; A is the surface area through which heat is extracted; and B is the *mold constant*. The mold constant, B, incorporates the characteristics of the metal being cast (heat capacity and heat of fusion), the mold material (heat capacity and thermal conductivity), the mold thickness, initial mold temperature, and the amount of superheat.

Test specimens can be cast to determine the value of B for a given mold material, casting material, and condition of casting. This value can then be used to compute the solidification times for other castings made under the same conditions. Since a riser and casting both lie within the same mold and fill with the same metal under the same conditions, Chvorinov's rule can be used to compare the solidification times of each and thereby ensure that the riser will solidify after the casting. This condition is absolutely essential if the liquid within the riser is to effectively feed the casting and compensate for solidification shrinkage. Aspects of riser design, including the use of Chvorinov's rule, will be developed later in this chapter.

Different cooling rates and solidification times can produce substantial variation in the structure and properties of the resulting casting. Die casting, for example, uses water-cooled metal molds, and the faster cooling produces higher-strength products than sand casting, where the mold material is more thermally insulating. Even variations in the type and condition of sand can produce different cooling rates. Sands with high moisture contents extract heat faster than ones with low moisture. Table 11-1 presents a comparison of the properties of aluminum alloy 443 cast by the three different processes of sand casting (slow cool), permanent mold casting (intermediate cooling rate), and die casting (fast cool).

THE CAST STRUCTURE

The products that result when molten metal is poured into a mold and permitted to solidify may have as many as three distinct regions or zones. The rapid nucleation that occurs when molten metal contacts the cold mold walls results in the production of a *chill zone,* a narrow band of randomly oriented crystals on the surface of a casting. As additional heat is removed, the grains of the chill zone begin to grow inward, and the rate of heat extraction and solidification decreases. Since most crystals have directions of

TABLE 11-1 Comparison of As-Cast Properties of 443 Aluminum Cast by Three Different Processes

Process	Yield Strength (ksi)	Tensile Strength (ksi)	Elongation (%)
Sand cast	8	19	8
Permanent mold	9	23	10
Die cast	16	33	9

---

[1] N. Chvorinov, "Theory of Casting Solidification", Giesserei, Vol. 27, 1940, pp. 177–180, 201–208, 222–225.

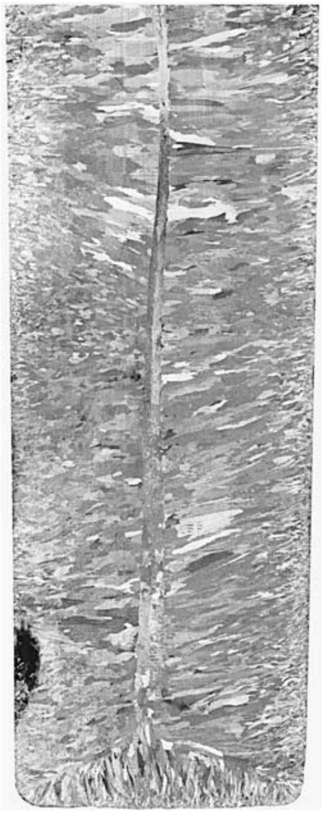

FIGURE 11-5 Internal structure of a cast metal bar showing the chill zone at the periphery, columnar grains growing toward the center, and a central shrinkage cavity.

rapid growth, a selection process begins. Crystals with rapid-growth direction perpendicular to the casting surface grow fast and shut off adjacent grains whose rapid-growth direction is at some intersecting angle. The favorably oriented crystals continue to grow, producing the long, thin columnar grains of a *columnar zone*. The properties of this region are highly directional, since the selection process has converted the purely random structure of the surface into one of parallel crystals of similar orientation. Figure 11-5 shows a cast structure containing both chill and columnar zones.

In many materials, new crystals then nucleate in the interior of the casting and grow to produce another region of spherical, randomly oriented crystals, known as the *equiaxed zone*. Low pouring temperatures, alloy additions, and the addition of inoculants can be used to promote the formation of this region, whose isotropic properties (uniform in all directions) are far more desirable than those of columnar grains.

MOLTEN METAL PROBLEMS

Castings begin with molten metal, and there are a number of chemical reactions that can occur between molten metal and its surroundings. These reactions and their products can often lead to defects in the final casting. For example, oxygen and molten metal can react to produce metal oxides (a nonmetallic or ceramic material), which can then be carried with the molten metal during the pouring and filling of the mold. Known as *dross* or *slag*, this material can become trapped in the casting and impair surface finish, machinability, and mechanical properties. Material eroded from the linings of furnaces and pouring ladles and loose sand particles from the mold surfaces can also contribute nonmetallic components to the casting.

Dross and slag can be controlled by using special precautions during melting and pouring, as well as by good mold design. Lower pouring temperatures or superheat slows the rate of dross-forming reactions. Fluxes can be used to cover and protect molten metal during melting, or the melting and pouring can be performed under a vacuum or protective atmosphere. Measures can be taken to agglomerate the dross and cause it to float to the surface of the metal, where it can be skimmed off prior to pouring. Special ladles can be used that extract metal from beneath the surface, such as those depicted in Figure 11-6. Gating systems can be designed to trap any dross, sand, or eroded mold material and keep it from flowing into the mold cavity. In addition, ceramic *filters* can be inserted into the feeder channels of the mold. These filters are available in a variety of shapes, sizes, and materials.

Liquid metals can also contain significant amounts of dissolved gas. When these materials solidify, the solid structure cannot accommodate the gas, and the rejected atoms form bubbles, or *gas porosity*, within the casting. Figure 11-7 shows the maximum

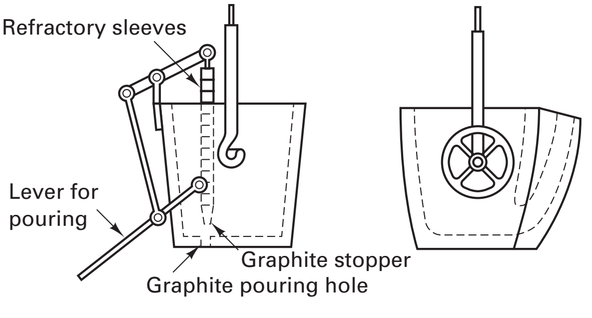

Bottom – pour ladle **Tea pot ladle**

FIGURE 11-6 Two types of ladles used to pour castings. Note how each extracts molten material from the bottom, avoiding transfer of the impure material from the top of the molten pool.

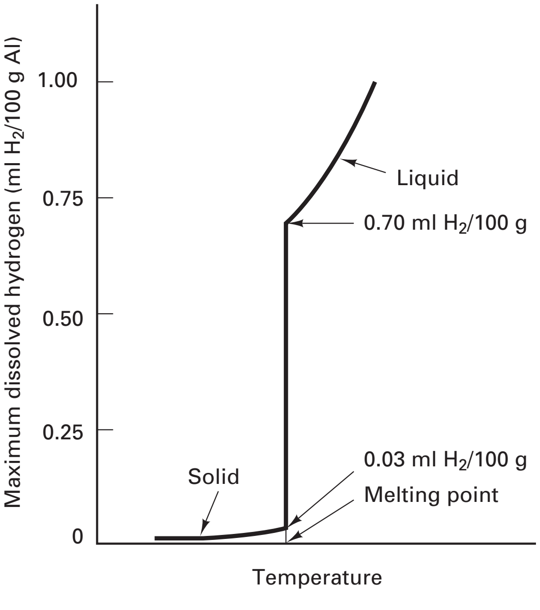

FIGURE 11-7 The maximum solubility of hydrogen in aluminum as a function of temperature.

solubility of hydrogen in aluminum as a function of temperature. Note the substantial decrease that occurs as the material goes from liquid to solid. Figure 11-8 shows a small demonstration casting that has been made from aluminum that has been saturated with dissolved hydrogen

Several techniques can be used to prevent or minimize the formation of gas porosity. One approach is to prevent the gas from initially dissolving in the molten metal. Melting can be performed under vacuum, in an environment of low-solubility gases, or under a protective flux that excludes contact with the air. Superheat temperatures can be kept low to minimize gas solubility. In addition, careful handling and pouring can do much to control the flow of molten metal and minimize the turbulence that brings air and molten metal into contact.

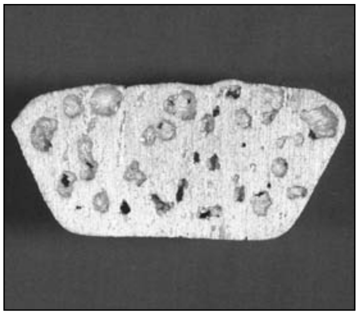

FIGURE 11-8 Demonstration casting made from aluminum that has been saturated in dissolved hydrogen. Note the extensive gas porosity.

Another approach is to remove the gas from the molten metal before it is poured into castings. *Vacuum degassing* sprays the molten metal through a low-pressure environment. Spraying creates a large amount of surface area, and the amount of dissolved gas is reduced as the material seeks to establish equilibrium with its new surroundings. (See a discussion of Sievert's law in any basic chemistry text.) Passing small bubbles of inert or reactive gas through the melt, known as *gas flushing*, can also be effective. In seeking equilibrium, the dissolved gases enter the flushing gas and are carried away. Bubbles of nitrogen or chlorine, for example, are particularly effective in removing hydrogen from molten aluminum.

The dissolved gas can also be reacted with something to produce a low-density compound, which then floats to the surface and can be removed with the dross or slag. Oxygen can be removed from copper by the addition of phosphorus. Steels can be deoxidized with addition of aluminum or silicon. The resulting phosphorus, aluminum, or silicon oxides are then removed by skimming or are left on the top of the container as the remaining high-quality metal is extracted from beneath the surface.

FLUIDITY AND POURING TEMPERATURE

When molten metal is poured to produce a casting, it should first *flow* into all regions of the mold cavity and then *freeze* into this new shape. It is vitally important that these two functions occur in the proper sequence. If the metal begins to freeze before it has completely filled the mold, defects known as *misruns* and *cold shuts* are produced.

The ability of a metal to flow and fill a mold, its "runniness," is known as *fluidity*, and casting alloys are often selected for this property. Fluidity affects the minimum section thickness that can be cast, the maximum length of a thin section, the fineness of detail, and the ability to fill mold extremities. While no single method has been accepted to measure fluidity, various "standard molds" have been developed where the results are sensitive to metal flow. One popular approach produces castings in the form of a long, thin spiral that progresses outward from a central sprue. The length of the final casting will increase with increased fluidity.

Fluidity is dependent on the composition, freezing temperature, and freezing range of the metal or alloy as well as the surface tension of oxide films. The most important controlling factor, however, is usually the *pouring temperature* or the amount of *superheat*. The higher the pouring temperature, the higher the fluidity. Excessive temperatures should be avoided, however. At high pouring temperatures, chemical reactions between the metal and the mold, and the metal and its pouring atmosphere, are all accelerated, and larger amounts of gas can be dissolved.

If the metal is too runny, it may not only fill the mold cavity, but also flow into the small voids between the particles that compose a sand mold. The surface of the resulting casting then contains small particles of embedded sand, a defect known as *penetration*.

THE ROLE OF THE GATING SYSTEM

When molten metal is poured into a mold, the gating system conveys the material and delivers it to all sections of the mold cavity. The speed or rate of metal movement is important as well as the amount of cooling that occurs while it is flowing. Slow filling and high loss of heat can result in misruns and cold shuts. Rapid rates of filling, on the other hand, can produce erosion of the gating system and mold cavity, and might result in the entrapment of mold material in the final casting. It is imperative that the cross-sectional

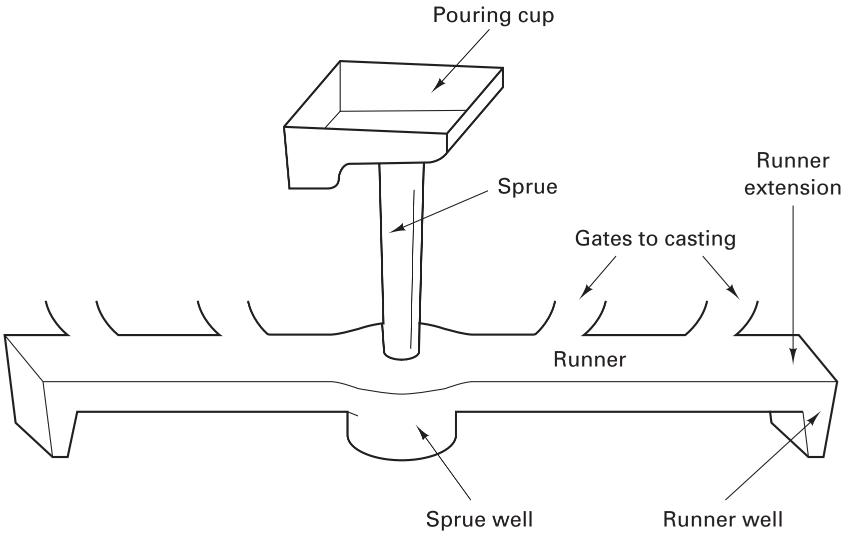

FIGURE 11-9 Typical gating system for a horizontal parting plane mold, showing key components involved in controlling the flow of metal into the mold cavity.

areas of the various channels be selected to regulate flow. The shape and length of the channels affect the amount of temperature loss. When heat loss is to be minimized, short channels with round or square cross sections (minimum surface area) are the most desirable. The gates are usually attached to the thickest or heaviest sections of a casting to control shrinkage and to the bottom of the casting to minimize turbulence and splashing. For large castings, multiple gates and runners may be used to introduce metal to more than one point of the mold cavity.

Gating systems should be designed to minimize *turbulent flow*, which tends to promote absorption of gases, oxidation of the metal, and erosion of the mold. Figure 11-9 shows a typical gating system for a mold with a horizontal parting line and can be used to identify some of the key components that can be optimized to promote the smooth flow of molten metal. Short sprues are desirable, since they minimize the distance that the metal must fall when entering the mold and the kinetic energy that the metal acquires during that fall. Rectangular pouring cups prevent the formation of a vortex or spiraling funnel, which tends to suck gas and oxides into the sprue. Tapered sprues also prevent vortex formation. A large *sprue well* can be used to dissipate the kinetic energy of the falling stream and prevent splashing and turbulence as the metal makes the turn into the runner.

The *choke*, or smallest cross-sectional area in the gating system, serves to control the rate of metal flow. If the choke is located near the base of the sprue, flow through the runners and gates is slowed and flow is rather smooth. If the choke is moved to the gates, the metal might enter the mold cavity with a fountain effect, an extremely turbulent mode of flow, but the small connecting area would enable easier separation of the casting and gating system.

Gating systems can also be designed to trap dross and sand particles and keep them from entering the mold cavity. Given sufficient time, the lower-density contaminants will rise to the top of the molten metal. Long, flat runners can be beneficial (but these promote cooling of the metal), as well as gates that exit from the lower portion of the runners. Since the first metal to enter the mold is most likely to contain the foreign matter (dross from the top of the pouring ladle and loose particles washed from the walls of the gating system), *runner extensions and wells* (see Figure 11-9) can be used to catch and trap this first metal and keep it from entering the mold cavity. These features are particularly effective with aluminum castings since aluminum oxide has approximately the same density as molten aluminum.

Screens or ceramic *filters* of various shapes, sizes, and materials can also be inserted into the gating system to trap foreign material. Wire mesh can often be used with the nonferrous metals, but ceramic materials are generally required for irons and steel. Figure 11-10 shows several ceramic filters and depicts the two basic types—extruded and foam. The pores on the extruded ceramics are uniform in size and shape and provide

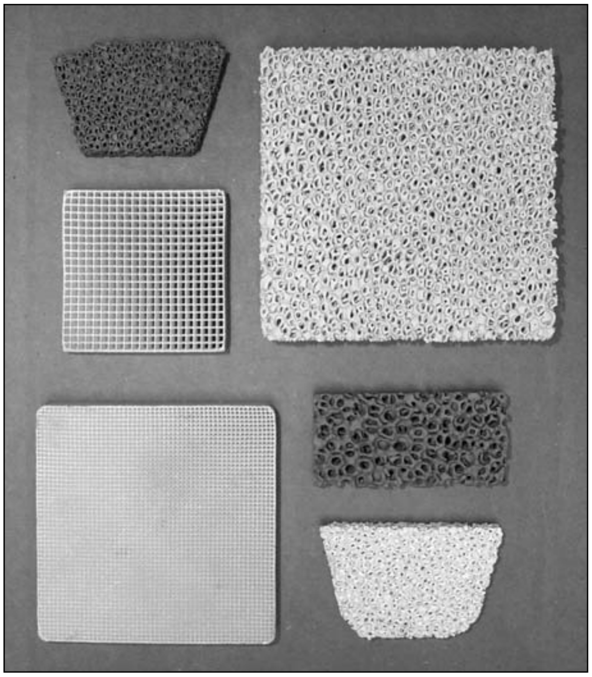

FIGURE 11-10 Various types of ceramic filters that may be inserted into the gating systems of metal castings.

parallel channels. The foams contain interconnected pores of various size and orientation, forcing the material to change direction as it negotiates its passage through the filter. Since these devices can also restrict the fluid velocity, streamline the fluid flow, or reduce turbulence, proper placement is an important consideration. To ensure removal of both dross and eroded sand, the filter should be as close to the mold cavity as possible, but since a filter can also act as the choke, it may be positioned at other locations, such as at the base of the pouring cup, at the base of the sprue, or in one or more of the runners.

The specific details of a gating system often vary with the metal being cast. Turbulent-sensitive metals (such as aluminum and magnesium) and alloys with low melting points generally employ gating systems that concentrate on eliminating turbulence and trapping dross. Turbulent-insensitive alloys (such as steel, cast iron, and most copper alloys) and alloys with a high melting point generally use short, open gating systems that provide for quick filling of the mold cavity.

SOLIDIFICATION SHRINKAGE

Once they enter the mold cavity and begin to cool, most metals and alloys undergo a noticeable volumetric contraction. Figure 11-11 shows the typical changes experienced by a metal column as the material goes from superheated liquid to room-temperature solid. There are three principal stages of *shrinkage*: (1) *shrinkage of the liquid* as it cools to the temperature where solidification begins, (2) *solidification shrinkage* as the liquid turns into solid, and (3) *solid metal contraction* as the solidified material cools to room temperature.

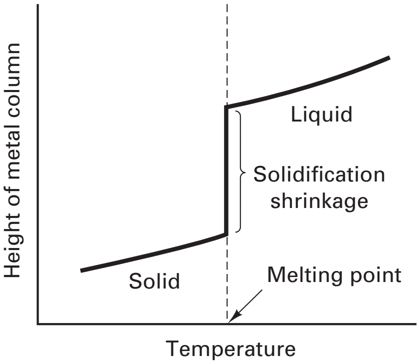

FIGURE 11-11 Dimensional changes experienced by a metal column as the material cools from a superheated liquid to a room-temperature solid. Note the significant shrinkage that occurs upon solidification.

TABLE 11-2 Solidification Shrinkage of Some Common Engineering Metals (Expressed in Percent)

Aluminum	6.6
Copper	4.9
Magnesium	4.0
Zinc	3.7
Low-carbon steel	2.5–3.0
High-carbon steel	4.0
White cast iron	4.0–5.5
Gray cast iron	−1.9

The amount of liquid metal contraction depends on the coefficient of thermal contraction (a property of the metal being cast) and the amount of superheat. Liquid contraction is rarely a problem, however, because the metal in the gating system continues to flow into the mold cavity as the liquid already in the cavity cools and contracts.

As the metal changes state from liquid to crystalline solid, the new atomic arrangement is usually more efficient, and significant amounts of shrinkage can occur. The actual amount of shrinkage varies from alloy to alloy, as shown in Table 11-2. As indicated in that table, not all metals contract upon solidification. Some actually expand, such as gray cast iron, where low-density graphite flakes form as part of the solid structure.

When solidification shrinkage does occur, however, it is important to control the form and location of the resulting void. Metals and alloys with short freezing ranges, such as pure metals and eutectic alloys, tend to form large cavities or pipes. These can be avoided by designing the casting to have directional solidification where freezing begins farthest away from the feed gate or riser and moves progressively toward it. As the metal solidifies and shrinks, the shrinkage void is continually filled with additional liquid metal. When the flow of additional liquid is exhausted and solidification is complete, we hope that the final shrinkage void is located external to the desired casting in either the riser or the gating system.

Alloys with large freezing ranges have a period of time when the material is in a slushy (liquid plus solid) condition. As the material cools between the liquidus and solidus, the relative amount of solid increases and tends to trap small, isolated pockets of liquid. It is almost impossible for additional liquid to feed into these locations, and the resultant casting tends to contain small but numerous shrinkage pores dispersed throughout. This type of shrinkage is far more difficult to prevent by means of gating and risering, and a porous product may be inevitable. If a gas- or liquid-tight product is required, these castings may need to be impregnated (the pores filled with a resinous material or lower-melting-temperature metal) in a subsequent operation. Castings with dispersed porosity tend to have poor ductility, toughness, and fatigue life.

After solidification is complete, the casting will contract further as it cools to room temperature. This solid metal contraction is often called patternmaker's contraction, since compensation for these dimensional changes should be made when the mold cavity or pattern is designed. Examples of these compensations will be provided later in this chapter. Concern arises, however, when the casting is produced in a rigid mold, such as the metal molds used in die casting. If the mold provides constraint during the time of contraction, tensile forces can be generated within the hot, weak casting, and cracking can occur (*hot tears*). It is often desirable, therefore, to eject the hot castings as soon as solidification is complete.

RISERS AND RISER DESIGN

Risers are added reservoirs designed to fill with liquid metal, which is then fed to the casting as a means of compensating for solidification shrinkage. To effectively perform this function, the risers must solidify after the casting. If the reverse were true, liquid metal would flow from the casting toward the solidifying riser and the casting shrinkage would be even greater. Hence, castings should be designed to produce directional solidification that sweeps from the extremities of the mold cavity toward the riser. In this way, the riser can continuously feed molten metal and will compensate for the solidification shrinkage of the entire mold cavity. Figure 11-12 shows a three-level step block cast in aluminum with and without a riser. Note that the riser is positioned so directional solidification moves from thin to thick and the shrinkage void is moved from the casting to the riser. If a single directional solidification is not possible, multiple risers may be required, with various sections of the casting each solidifying toward their respective riser.

The risers should also be designed to conserve metal. If we define the *yield* of a casting as the casting weight divided by the total weight of metal poured (complete gating

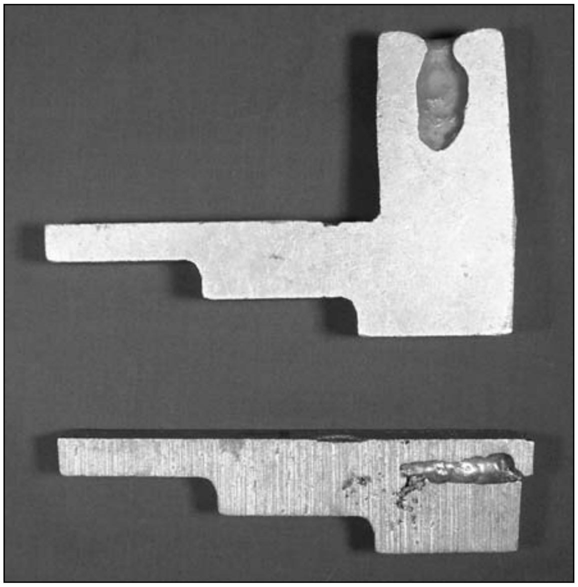

FIGURE 11-12 A three-tier step-block aluminum casting made with (top) and without (bottom) a riser. Note how the riser has moved the shrinkage void external to the desired casting.

system, risers, and casting), it is clear that there is a motivation to make the risers as small as possible, yet still able to perform their task. This is usually done through proper consideration of riser size, shape, and location, as well as the type of connection between the riser and casting.

A good shape for a riser would be one that has a long freezing time. According to Chvorinov's rule, this would favor a shape with small surface area per unit volume. While a sphere would make the most efficient riser, this shape presents considerable difficulty to both patternmaker and moldmaker. The most popular shape for a riser, therefore, is a cylinder, where the height-to-diameter ratio is varied depending upon the nature of the alloy being cast, the location of the riser, the size of the flask, and other variables. A one-to-one height-to-diameter ratio is generally considered to be ideal.

Risers should be located so that directional solidification occurs from the extremities of the mold cavity back toward the riser. Since the thickest regions of a casting will be the last to freeze, risers should feed directly into these locations. Various types of risers are possible. A *top riser* is one that sits on top of a casting. Because of their location, top risers have shorter feeding distances and occupy less space within the flask. They give the designer more freedom for the layout of the pattern and gating system. *Side risers* are located adjacent to the mold cavity, displaced horizontally along the parting line. Figure 11-13 depicts both a top and a side riser. If the riser is contained entirely within the mold, it is known as a *blind riser.* If it is open to the atmosphere, it is called an *open riser*. Blind risers are usually larger than open risers because of the additional heat loss that occurs where the top of the riser is in contact with mold material.

Live risers (also known as hot risers) receive the last hot metal that enters the mold and generally do so at a time when the metal in the mold cavity has already begun to cool and solidify. Thus, they can be smaller than *dead (or cold) risers*, which fill with metal that has already flowed through the mold cavity. As shown in Figure 11-13, top risers are almost always dead risers. Risers that are part of the gating system generally live risers.

FIGURE 11-13 Schematic of a sand casting mold, showing (a) an open-type top riser and (b) a blind-type side riser. The side riser is a live riser, receiving the last hot metal to enter the mold. The top riser is a dead riser, receiving metal that has flowed through the mold cavity.

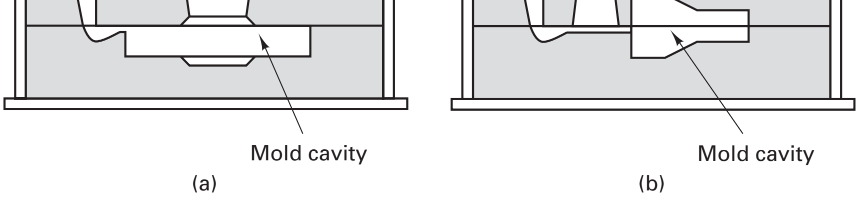

The minimum size of a riser can be calculated from Chvorinov's rule by setting the total solidification time for the riser to be greater than the total solidification time for the casting. Since both cavities receive the same metal and are in the same mold, the mold constant, B, will be the same for both regions. Assuming that $n = 2$ and that a safe difference in solidification time is 25% (the riser takes 25% longer to solidify than the casting), we can write this condition as

$$t_{\text{riser}} = 1.25 t_{\text{casting}} \tag{11-1}$$

or

$$(V/A)^2_{\text{riser}} = 1.25\,(V/A)^2_{\text{casting}} \tag{11-2}$$

Calculation of the riser size then requires selection of a riser geometry, which is generally cylindrical. For a cylinder of diameter D and height H, the volume and surface area can be written as:

$$V = \pi D^2 H/4$$
$$A = \pi D H + 2(\pi D^2/4)$$

Selecting a specific height-to-diameter ratio for the riser then enables equation 11-2 to be written as a simple expression with one unknown, D. The volume-to-area ratio for the casting is computed for its particular geometry, and the equation can then be solved to provide the size of the required riser. One should note that if the riser and casting share a surface, as with a blind top riser, the area of the common surface should be subtracted from both components since it will not be a surface of heat loss to either. It should be noted that there are actually a number of methods to calculate riser size. The Chvorinov's rule method will be the only one presented here.

A final aspect of riser design is the connection between the riser and the casting. Since the riser must ultimately be separated from the casting, it is desirable that the connection area be as small as possible. On the other hand, the connection area must be sufficiently large so that the link does not freeze before solidification of the casting is complete. If the risers are placed close to the casting with relatively short connections, the mold material surrounding the link receives heat from both the casting and the riser. It should heat rapidly and remain hot throughout the cast, thereby preventing solidification of the metal in the channel.

RISERING AIDS

Various methods have been developed to assist the risers in performing their job. Some are intended to promote directional solidification, while others seek to reduce the number and size of the risers, thereby increasing the yield of a casting. These techniques generally work by either speeding the solidification of the casting (*chills*) or retarding the solidification of the riser (*sleeves* or toppings).

External chills are masses of high-heat-capacity, high-thermal-conductivity material (such as steel, iron, graphite, or copper) that are placed in the mold, adjacent to the casting, to absorb heat and accelerate the cooling of various regions. Chills can effectively promote directional solidification or increase the effective feeding distance of a riser. They can also be used to reduce the number of risers required for a casting. External chills are frequently covered with a protective wash, silica flour, or other refractory material to prevent bonding with the casting.

Internal chills are pieces of metal that are placed within the mold cavity to absorb heat and promote more rapid solidification. When the molten metal of the pour surrounds the chill, it absorbs heat as it seeks to come to equilibrium with its surroundings. Internal chills ultimately become part of the final casting, so they must be made from an alloy that is the same as or compatible with the alloy being cast.

The cooling of risers can be slowed by methods that include (1) switching from a blind riser to an open riser, (2) placing *insulating sleeves* around the riser, and (3) surrounding the sides or top of the riser with *exothermic material* that supplies added heat to just the riser segment of the mold. The objective of these techniques is generally to reduce the riser size rather than promote directional solidification.

It is important to note that risers are not always necessary or functional. For alloys with large freezing ranges, risers would not be particularly effective, and one generally accepts the fine, dispersed porosity that results. For processes such as die casting, low-pressure permanent molding, and centrifugal casting, the positive pressures associated with the process provide the feeding action that is required to compensate for solidification shrinkage.

11.5 PATTERNS

Casting processes can be divided into two basic categories: (1) those for which a new mold must be created for each casting (the *expendable-mold processes*) and (2) those that employ a permanent, *reusable mold*. Most of the expendable-mold processes begin with some form of reusable *pattern*—a duplicate of the part to be cast, modified dimensionally to reflect both the casting process and the material being cast. Patterns can be made from wood, metal, foam, or plastic, with urethane now being the material of choice for nearly half of all casting patterns.

The dimensional modifications that are incorporated into a pattern are called *allowances*, and the most important of these is the *shrinkage allowance*. Following solidification, a casting continues to contract as it cools to room temperature, the amount of this contraction being as much as 2% or 1/4 in./ft. To produce the desired final dimensions, the pattern (which sets the dimensions upon solidification) must be slightly larger than the room-temperature casting. The exact amount of this shrinkage compensation, which depends on the metal that is being cast, can be estimated by the equation Δ length = length $\alpha \Delta T$, where α is the coefficient of thermal expansion and ΔT is the difference between the freezing temperature and room temperature. Typical allowances for some common engineering metals are:

Cast iron	0.8–1.0%
Steel	1.5–2.0%
Aluminum	1.0–1.3%
Magnesium	1.0–1.3%
Brass	1.5%

Shrinkage allowances are often incorporated into a pattern through use of special *shrink rules*—measuring devices that are larger than a standard rule by an appropriate shrink allowance. For example, a shrink rule for brass would designate 1 foot at a length that is actually 1 foot 3/16 inch, since the anticipated 1.5% shrinkage will reduce the length by 3/16 inch. A complete pattern made to shrink rule dimensions will produce a proper size casting after cooling.

Caution should be exercised when using shrink rule compensations, however, for thermal contraction may not be the only factor affecting the final dimensions. The various phase transformations discussed in Chapter 4 are often accompanied by significant dimensional expansions or contractions. Examples include eutectoid reactions, martensitic reactions, and graphitization.

In many casting processes, mold material is formed around the pattern and the pattern is then extracted to create the mold cavity. To facilitate pattern removal, molds are often made in two or more sections that separate along mating surfaces called the *parting line* or *parting plane*. A flat parting line is usually preferred, but the casting design or molding practice may dictate the use of irregular or multiple parting surfaces.

If the pattern contains surfaces that are perpendicular to the parting line (parallel to the direction of pattern withdrawal), friction between the pattern and the mold material as well as any horizontal movement of the pattern during extraction could induce damage to the mold. This damage could be particularly severe at the corners, where the mold cavity intersects the parting surface. Such extraction damage can be minimized by incorporating a slight taper, or *draft*, on all pattern surfaces that are parallel to the direction of withdrawal. A slight withdrawal of the pattern will free it from the mold material on all surfaces, and it can then be further removed without damage to the mold. Figure 11-14 illustrates the use of draft to facilitate pattern removal.

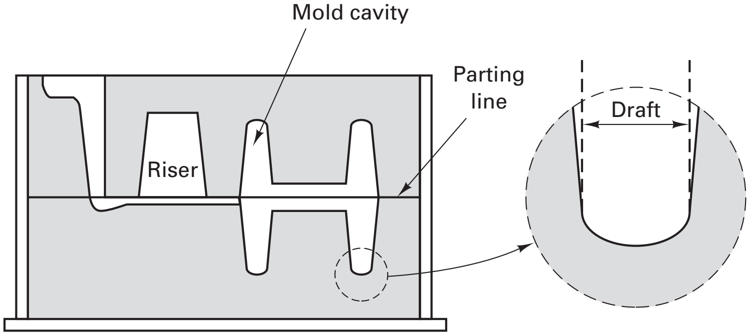

FIGURE 11-14 Two-part mold showing the parting line and the incorporation of a draft allowance on vertical surfaces.

The size and shape of the pattern, the depth of the mold cavity, the method used to withdraw the pattern, the pattern material, the mold material, and the molding procedure all influence the actual amount of draft required. Draft is seldom less than 1° or 1/8 in./ft., with a minimum taper of about 1/16 inch over the length of any surface. Since draft allowances increase the size of a pattern (and thus the size and weight of a casting), it is generally desirable to keep them to the minimum that will permit satisfactory pattern removal. Molding procedures that produce higher-strength molds and the use of mechanical pattern withdrawal can often enable reductions in draft allowances. By reducing the taper, casting weight and the amount of subsequent machining can both be reduced.

When smooth machined surfaces are required, it may be necessary to add an additional *machining allowance*, or *finish allowance*, to the pattern. The amount of this allowance depends to a great extent on the casting process and the mold material. Ordinary sand castings have rougher surfaces than those of shell-mold castings. Die castings have smooth surfaces that may require little or no metal removal, and the surfaces of investment castings are even smoother. It is also important to consider the location of the desired machining and the presence of other allowances, since the draft allowance may provide part or all of the extra metal needed for machining.

Some casting shapes require an additional allowance for *distortion*. Consider a U-shaped section where the arms are restrained by the mold at a time that the base of the U is free to shrink. The result will be a final casting with outwardly sloping arms. If the arms are designed to originally slope inward, however, the subsequent distortion will produce the desired straight-shape casting. Distortion depends greatly on the particular configuration of the casting, and casting designers must use experience and judgment to provide an appropriate distortion allowance.

Figure 11-15 illustrates the manner in which the various allowances are incorporated into a casting pattern. Similar allowances are applied to the cores that create the holes or interior passages of a casting.

If a casting is to be made in a multiuse metal mold, all of the “pattern allowances” discussed above should be incorporated into the machined cavity. The dimensions of this cavity will further change, however, as sequential casts raise the mold temperature to an equilibrium level. An additional correction should be added to compensate for this effect.

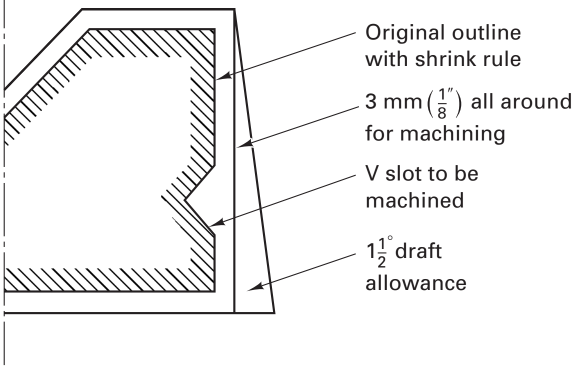

FIGURE 11-15 Various allowances incorporated into a casting pattern.

11.6 DESIGN CONSIDERATIONS IN CASTINGS

To produce the best-quality product at the lowest possible cost, it is important that the designers of castings give careful attention to several process requirements. It is not uncommon for minor and readily permissible changes in design to greatly facilitate and simplify the casting of a component and also reduce the number and severity of defects.

One of the first features that must be considered by a designer is the *location and orientation of the parting plane*, an important part of all processes that use segmented or separable molds. The location of the parting plane can affect (1) the number of cores, (2) the method of supporting the cores, (3) the use of effective and economical gating, (4) the weight of the final casting, (5) the final dimensional accuracy, and (6) the ease of molding.

In general, it is desirable to minimize the use of cores. A change in the location or orientation of the parting plane can often assist in this objective. The change illustrated in Figure 11-16 not only eliminates the need for a core but can also reduce the weight of the casting by eliminating the need for draft. Figure 11-17 shows another example of how a core can be eliminated by a simple design change. Figure 11-18 shows how the specification of draft can act to fix the parting plane. This figure also shows that simply noting the desired shape and the need to provide sufficient draft can provide considerable design freedom. Since mold closure may not always be consistent, consideration should also be given to the fact that dimensions across the parting plane are subject to greater variation than those that lie entirely within a given segment of the mold.

Controlling the solidification process is of prime importance in obtaining quality castings, and this control is also related to design. Those portions of a casting that have a high ratio of surface area to volume will experience more rapid cooling, and will be stronger and harder than the other regions. Thicker or heavier sections will cool more slowly, and

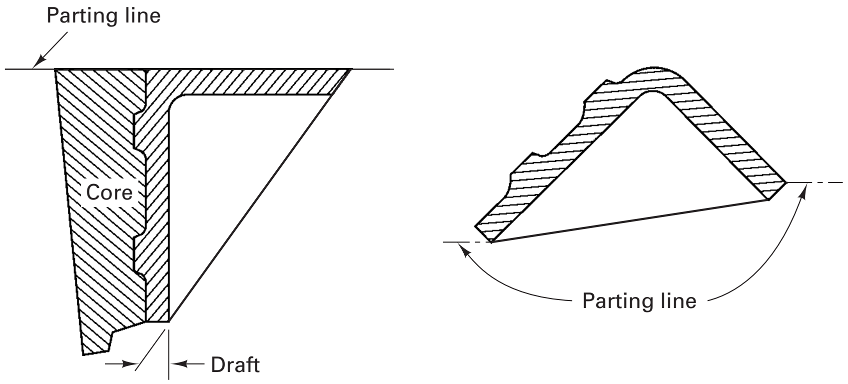

FIGURE 11-16 Elimination of a core by changing the location or orientation of the parting plane.

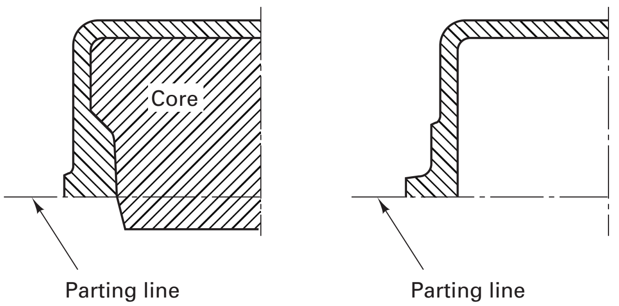

FIGURE 11-17 Elimination of a dry-sand core by a change in part design.

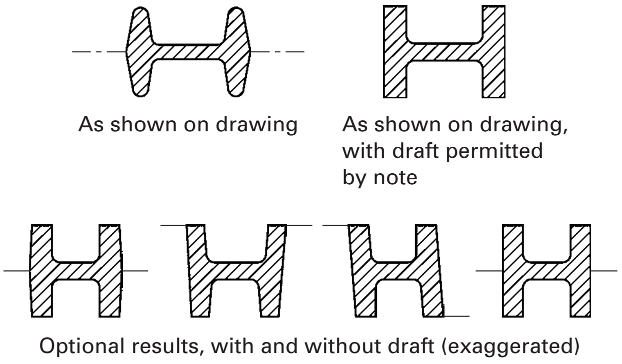

FIGURE 11-18 (Top left) Design where the location of the parting plane is specified by the draft. (Top right) Part with draft unspecified. (Bottom) Various options to produce the top-right part, including a no-draft design.

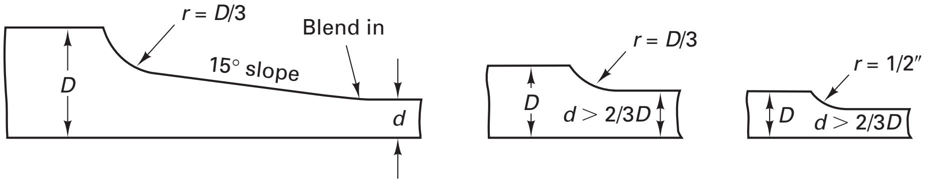

If $D > 1.5''$ and $d < 2D/3$, then $r = D/3$ with a 15° slope between the two parts

If $D > 1.5''$ and $d > 2/3\ D$, then $r = D/3$

If $D < 1.5''$ and $d > 2/3\ D$, then $r = 1/2''$

FIGURE 11-19 Typical guidelines for section change transitions in castings.

may contain shrinkage cavities and porosity, or have weaker, large grain-size structures. Ideally, a casting should have uniform thickness at all locations. Instead of thicker sections, ribs or other geometric features can often be used to impart additional strength while maintaining uniform wall thickness. When the section thickness must change, it is best if these changes are gradual, as indicated in the recommendations of Figure 11-19.

When sections of castings intersect, as in Figure 11-20a, two problems can arise. The first of these is *stress concentration*. Generous *fillets* (inside radii) at all interior corners can better distribute stresses and help to minimize potential problems, including shrinkage cracks. If the fillets are excessive, however, the additional material can augment the second problem, known as *hot spots*. Thick sections, like those at the intersection in Figure 11-20a and those illustrated in Figure 11-21, cool more slowly than other locations and tend to be sites of localized shrinkage. Shrinkage voids can be sites of subsequent failure and should be prevented if at all possible. Where thick sections must exist, an adjacent riser is often used to feed the section during solidification and shrinkage. If the riser is designed properly, the shrinkage cavity will lie totally within the riser, as illustrated in Figure 11-22, and will be removed when the riser is cut off. Sharp exterior corners tend to cool faster than the other sections of a casting. If an exterior radius is provided, the surface area can be reduced and cooling slowed to be more consistent with the surrounding material. Figure 11-20b shows a recommended modification to Figure 11-20a.

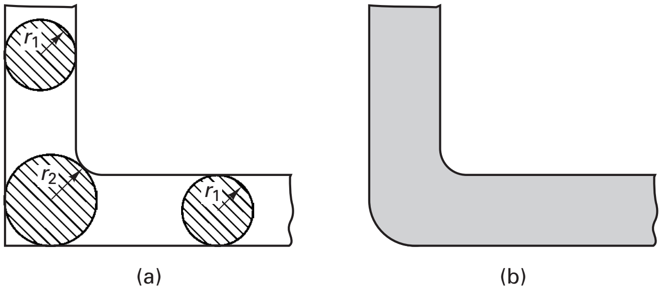

FIGURE 11-20 (a) The "hot spot" at section r_2 is caused by intersecting sections. (b) An interior fillet and exterior radius lead to more uniform thickness and more uniform cooling.

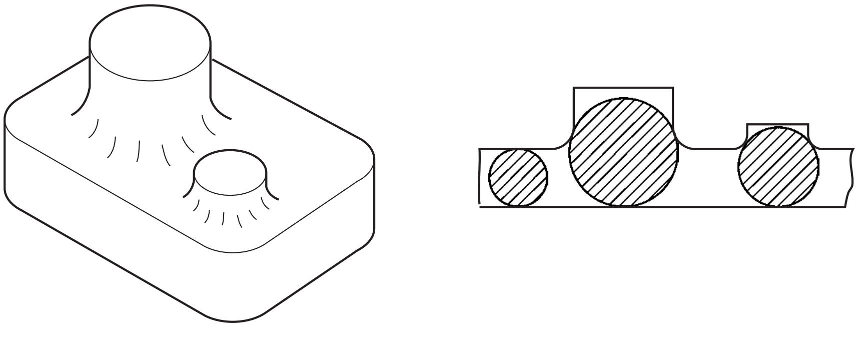

FIGURE 11-21 Hot spots often result from intersecting sections of various thickness.

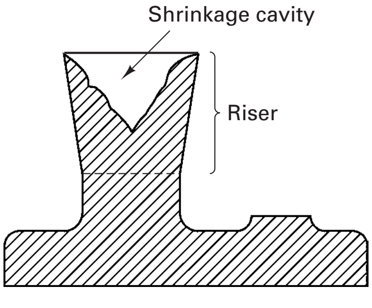

FIGURE 11-22 Attached risers can move the shrinkage cavity external to the actual casting.

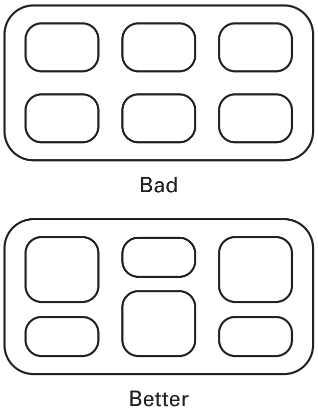

FIGURE 11-23 Using staggered ribs to prevent cracking during cooling.

When sections intersect to form continuous ribs, like those in Figure 11-23, contraction occurs in opposite directions as each of the arms cools and shrinks. As a consequence, cracking frequently occurs at the intersections. By staggering the ribs, as shown in the second portion of Figure 11-23, there is opportunity for distortion to occur that would provide relaxation to the high residual stresses that might otherwise induce cracking.

The location of the parting line may also be an appearance consideration. A small amount of fin, or flash, is often present at the parting line, and when the flash is removed (or left in place if it is small enough), a line of surface imperfection results. If the location is in the middle of a flat surface, it will be clearly visible in the product. If the parting line can be moved to coincide with a corner, however, the associated "defect" will go largely unnoticed.

Thin-walled castings are often desired because of their reduced weight, but thin walls can often present manufacturing problems related to mold filling (premature freezing before complete fill). Minimum section thickness should always be considered when designing castings. Specific values are rarely given, however, because they tend to vary with the shape and size of the casting, the type of metal being cast, the method of casting, and the practice of an individual foundry. Table 11-3 presents typical minimum-thickness values for several cast materials and casting processes. Zinc die casting can now produce walls as thin as 0.5 mm.

Casting design can often be aided by *computer simulation*. The mathematics of fluid flow can be applied to *mold filling*, and the principles of heat transfer can be used for *solidification modeling*. The mathematical tools of finite element or finite difference calculations can be coupled with the use of high-speed computers to permit beneficial design changes before the manufacture of patterns or molds.

TABLE 11-3 Typical Minimum Section Thickness for Various Engineering Metals and Casting Processes

Casting Method	Minimum Section Thickness (mm)		
	Aluminum	Magnesium	Steel
Sand casting	3.18	3.96	4.75
Permanent mold	2.36	3.18	—
Die cast	1.57	2.36	—
Investment cast	1.57	1.57	2.36
Plaster mold	2.03	—	—

■ 11.7 THE CASTING INDUSTRY

The U.S. metal-casting industry ships over 14 million pounds of castings every year, with gray iron, ductile iron, aluminum alloys, and copper-base metals comprising the major portion. Thirty-five percent of the market is directed toward automotive and light truck manufacture. The average 2005 passenger car and light truck contained 75 kg (160 pounds) of iron castings and 115 kg (250 pounds) of cast aluminum. Magnesium castings are also beginning to achieve a presence.

Metal castings form primary components in: agricultural implements; construction equipment; mining equipment; valves and fittings; metalworking machinery; power tools; pumps and compressors; railroad equipment; power transmission equipment; and heating, refrigeration, and air-conditioning equipment. Ductile iron pipe is a mainstay for conveying pressurized fluids, and household appliances and electronics all utilize metal castings.

■ Key Words

allowance
blind riser
casting
chill
chill zone
choke
Chvorinov's rule
cold shut
columnar zone
computer simulation
consolidation processes
cooling curve
cooling rate
cope
core
core box
core print
dead riser
deformation processes
directional solidification
distortion
draft
drag
dross

equiaxed zone
expendable-mold process
external chill
fillet
filters
flask
fluidity
freezing range
gas flushing
gas porosity
gate
gating system
grain refinement
growth
hot spot
hot tears
inoculation
insulating sleeve
internal chill
liquidus
live riser
local solidification time
machining
machining allowance
material removal
materials processing
misruns
mold cavity
mold constant
mold material
multiple-use mold
nucleation
open riser
parting line (parting surface)
pattern
penetration
pouring cup
pouring temperature
powder metallurgy
reuseable mold
riser
runner
runner extension
shrink rule
shrinkage allowance
side riser
single-use mold
slag
sleeves
solidification
solidification modeling
solidification shrinkage
solidus
sprue
sprue well
stress concentrators
superheat
thermal arrest
top riser
total solidification time
turbulent flow
undercooling
vacuum degassing
vent
yield

■ Review Questions

1. What are the six activities that are conducted on almost every manufactured product?
2. What is “materials processing”?
3. What are the four basic families of shape-production processes? Cite one advantage and one limitation of each family.
4. Describe the capabilities of the casting process in terms of size and shape of the product.
5. How might the desired production quantity influence the selection of a single-use or multiple-use molding process?
6. Why is it important to provide a means of venting gases from the mold cavity?
7. What types of problem or defect can occur if the mold material provides too much restraint to the solidifying and cooling metal?
8. What is a casting pattern? Flask? Core? Mold cavity? Riser?
9. What are some of the components that combine to make up the gating system of a mold?
10. What is a parting line or parting surface?
11. What is draft and why is it used?
12. What are the two stages of solidification, and what occurs during each?
13. Why is it that most solidification does not begin until the temperature falls somewhat below the equilibrium melting temperature (i.e., undercooling is required)?
14. Why might it be desirable to promote nucleation in a casting through inoculation or grain refinement processes?
15. Heterogeneous nucleation begins at preferred sites within a mold. What are some probable sites for heterogeneous nucleation?
16. Why might directional solidification be desirable in the production of a cast product?
17. Describe some of the key features observed in the cooling curve of a pure metal.
18. What is superheat?
19. What is the freezing range for a metal or alloy?
20. Discuss the roles of casting volume and surface area as they relate to the total solidification time and Chvorinov’s rule.
21. What characteristics of a specific casting process are incorporated into the mold constant, B, of Chvorinov’s rule?
22. What is the correlation between cooling rate and final properties of a casting?
23. What is the chill zone of a casting, and why does it form?
24. Which of the three regions of a cast structure is least desirable? Why are its properties highly directional?
25. What is dross or slag, and how can it be prevented from becoming part of a finished casting?
26. What are some of the possible approaches that can be taken to prevent the formation of gas porosity in a metal casting?
27. What is fluidity, and how can it be measured?
28. What is a misrun or cold shut, and what causes them to form?
29. What defect can form in sand castings if the pouring temperature is too high and fluidity is too great?
30. Why is it important to design the geometry of the gating system to control the rate of metal flow as it travels from the pouring cup into the mold cavity?
31. What are some of the undesirable consequences that could result from turbulence of the metal in the gating system and mold cavity?
32. What is a choke, and how does its placement affect metal flow?
33. What features can be incorporated into the gating system to aid in trapping dross and loose mold material that is flowing with the molten metal?
34. What features of the metal being cast tend to influence whether the gating system is designed to minimize turbulence and reduce dross, or promote rapid filling to minimize temperature loss?
35. What are the three stages of contraction or shrinkage as a liquid is converted into a finished casting?
36. Why is it more difficult to prevent shrinkage voids from forming in metals or alloys with large freezing ranges?
37. What type of flaws or defects form during the cooling of an already-solidified casting?
38. Why is it desirable to design a casting to have directional solidification sweeping from the extremities of a mold toward a riser?
39. Based on Chvorinov’s rule, what would be an ideal shape for a casting riser? A desirable shape from a practical perspective?
40. What is “yield,” and how does it relate to the number and size of the specified risers?
41. Define the following riser-related terms: *top riser, side riser, open riser, blind riser, live riser*, and *dead riser*.
42. What assumptions were made when using Chvorinov’s rule to calculate the size of a riser in the manner presented in the text? Why is the mold constant, B, not involved in the calculations?

43. Discuss aspects relating to the connection between a riser and the casting.
44. What is the purpose of a chill? Of an insulating sleeve? Of exothermic material?
45. What types of modifications or allowances are generally incorporated into a casting pattern?
46. What is a shrink rule, and how does it work?
47. What is the purpose of a draft or taper on pattern surfaces?
48. Why is it desirable to make the pattern allowances as small as possible?
49. What are some of the features of the casting process that are directly related to the location of the parting plane?
50. What are "hot spots" and what sort of design features cause them to form?
51. Are metal castings used in passenger cars and light trucks? To what extent?

Problems

1. Using Chvorinov's rule as presented in the text, with $n = 2$, calculate the dimensions of an effective riser for a casting that is a rectangular plate 2 in. by 4 in. by 6 in. with the dimensions. Assume that the casting and riser are not connected, except through a gate and runner, and that the riser is a cylinder of height/diameter ratio $H/D = 1.5$. The finished casting is what fraction of the combined weight of the riser and casting?
2. Reposition the riser in Problem 1 so that it sits directly on top of the flat rectangle, with its bottom circular surface being part of the surface of the casting, and recompute the size and yield fraction. Which approach is more efficient?
3. A rectangular casting having the dimensions 3 in. by 5 in. by 10 in. solidifies completely in 11.5 minutes. Using $n = 2$ in Chvorinov's rule, calculate the mold constant, B. Then compute the solidification time of a casting with the dimensions 0.5 in. by 8 in. by 8 in. poured under the same conditions.

www.wiley.com/college/degarmo

Chapter 11 CASE STUDY

The Cast Oil-Field Fitting

A cast iron, T-type fitting is being produced for the oil drilling industry, using an air-set or no-bake sand for both the mold and the core. A silica sand has been used in combination with a catalyzed alkyd-oil/urethane binder. The figure shows a cross section of the mold with the core in place (a) and a cross section of the finished casting (b). The final casting contains several significant defects. Gas bubbles are observed in the bottom section of the horizontal tee. A penetration defect is observed near the bottom of the inside diameter, and there is an enlargement of the casting at location C.

1. What is the most likely source of the gas bubbles? Why are they present only at the location noted? What might you recommend as a solution?
2. What factors may have caused the penetration defect? Why is the defect present on the inside of the casting but not on the outside? Why is the defect near the bottom of the casting but not near the top?
3. What factors led to the enlargement of the casting at point C? What would you recommend to correct this problem?
4. Another producer has noted penetration defects on all surfaces of his castings, both interior and exterior. What would be some possible causes? What could you recommend as possible cures?
5. Could these molds and cores be reclaimed (i.e., recycled) after breakout? Discuss.

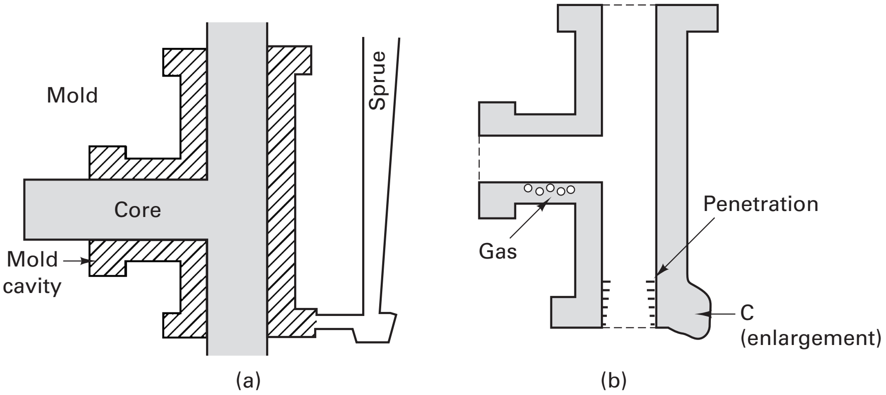

CHAPTER 12

EXPENDABLE-MOLD CASTING PROCESSES

12.1 INTRODUCTION

The versatility of metal casting is made possible by a number of distinctly different processes, each with its own set of characteristic advantages and benefits. Selection of the best process requires a familiarization with the various options and capabilities as well as an understanding of the needs of the specific product. Some factors to be considered include the desired dimensional precision and surface quality, the number of castings to be produced, the type of pattern and core box that will be needed, the cost of making the required mold or die, and restrictions imposed by the selected material.

As we begin to survey the various casting processes, it is helpful to have some form of process classification. One approach focuses on the molds and patterns and utilizes the following three categories:

1. Single-use molds with multiple-use patterns
2. Single-use molds with single-use patterns
3. Multiple-use molds

Categories 1 and 2 are often combined under the more general heading *expendable-mold casting processes*, and these processes will be presented in this chapter. Sand, plaster, ceramics, or other refractory materials are combined with binders to form the mold. Those processes where a mold can be used multiple times will be presented in Chapter 13. The multiple-use molds are usually made from metal.

Since the casting processes are primarily used to produce metal products, the emphasis of the casting chapters will be on metal casting. The metals most frequently cast are iron, steel, stainless steel, aluminum alloys, brass, bronze and other copper alloys, magnesium alloys, certain zinc alloys, and nickel-based superalloys. Among these, cast iron and aluminum are the most common, primarily because of their low cost, good fluidity, adaptability to a variety of processes, and the wide range of product properties that are available. The processes used to fabricate products from polymers, ceramics (including glass), and composites, including casting processes, will be discussed in Chapter 15.

12.2 SAND CASTING

Sand casting is by far the most common and possibly the most versatile of the casting processes, accounting for over 90% of all metal castings. Granular refractory material (such as silica, zircon, olivine, or chromite sand) is mixed with small amounts of other materials, such as clay and water, and is then packed around a pattern that has the shape of the desired casting. Because the grains can pack into thin sections and can be economically used in large quantities, products spanning a wide range of sizes and detail can be made by this method. If the pattern is to be removed before pouring, the mold is usually made in two or more segments. An opening called a *sprue hole* is cut from the top of the mold through the sand and connected to a system of channels called *runners*. The molten metal is poured down the sprue hole, flows through the runners, and enters the mold cavity through one or more openings, called *gates*. Gravity flow is the most common means of introducing the metal into the mold. The metal is allowed to solidify, and the mold is then broken to permit removal of the finished casting. Because the mold is destroyed in product removal, a new mold must be made for each casting. Figure 12-1 shows the essential

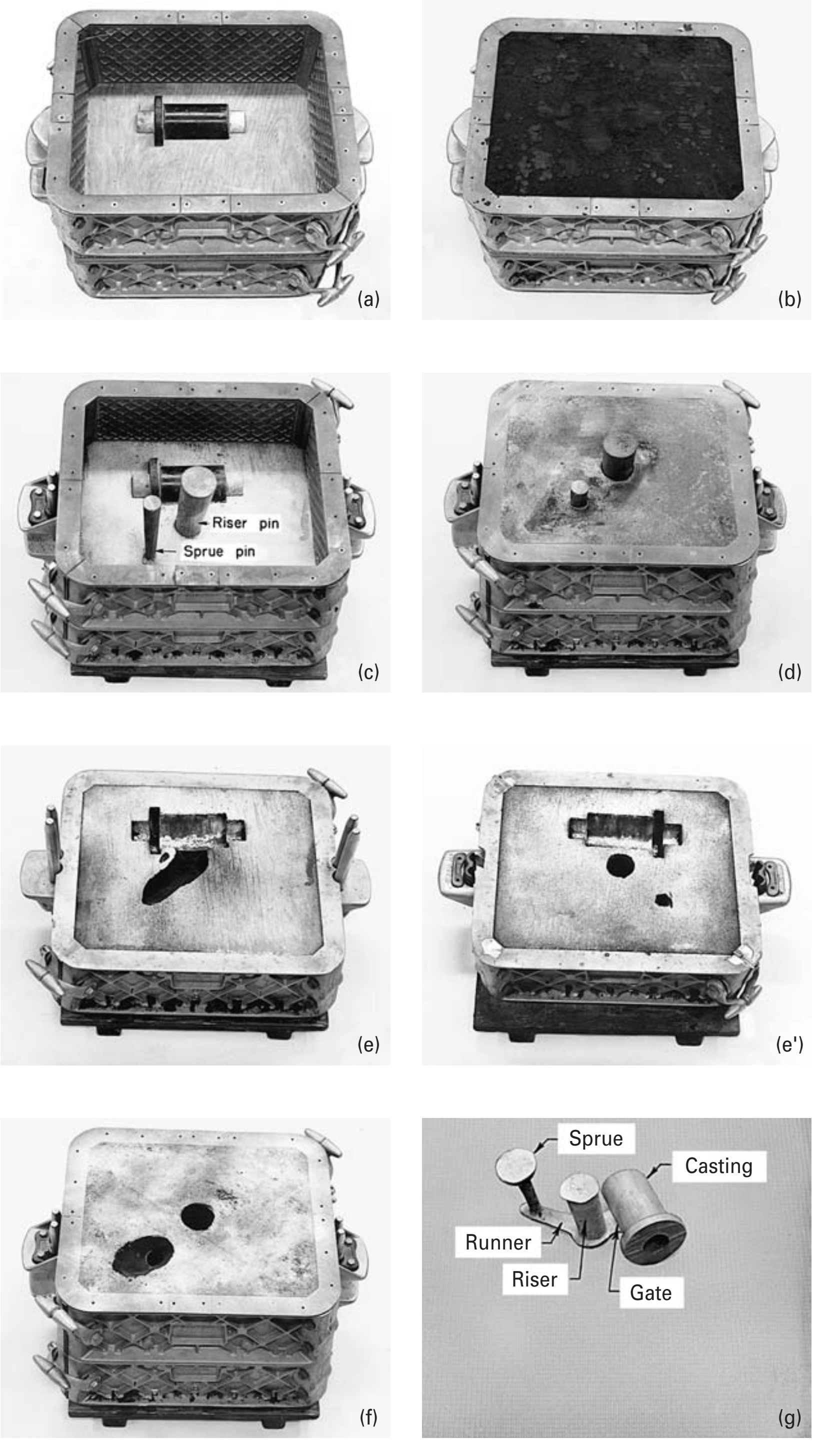

FIGURE 12-1 Sequential steps in making a sand casting. (a) A pattern board is placed between the bottom (drag) and top (cope) halves of a flask, with the bottom side up. (b) Sand is then packed into the bottom or drag half of the mold. (c) A bottom board is positioned on top of the packed sand, and the mold is turned over, showing the top (cope) half of pattern with sprue and riser pins in place. (d) The upper or cope half of the mold is then packed with sand. (e) The mold is opened, the pattern board is drawn (removed), and the runner and gate are cut into the bottom parting surface of the sand. (e') The parting surface of the upper or cope half of the mold is also shown with the pattern and pins removed. (f) The mold is reassembled with the pattern board removed, and molten metal is poured through the sprue. (g) The contents are shaken from the flask and the metal segment is separated from the sand, ready for further processing.

steps and basic components of a sand casting process. A two-part cope-and-drag mold is illustrated, and the casting incorporates both a core and a riser (discussed in Chapter 11).

PATTERNS AND PATTERN MATERIALS

The first step in making a sand casting is the design and construction of a *pattern*. This is a duplicate of the part to be cast, modified in accordance with the requirements of the casting process, the metal being cast, and the particular molding technique that is being used. Selection of the pattern material is determined by the number of castings to be made, the size and shape of the casting, the desired dimensional precision, and the molding process. Wood patterns are relatively easy to make and are frequently used when small quantities of castings are required. Wood, however, is not very dimensionally stable. It may warp or swell with changes in humidity, and it tends to wear with repeated use. Metal patterns are more expensive but are more stable and durable. Hard plastics, such as urethanes, offer another alternative and are often preferred with processes that use strong, organically bonded sands that tend to stick to other pattern materials. In the full-mold and lost-foam processes, expanded polystyrene (EPS) is used, and investment casting uses patterns made from wax. In the latter processes, both the pattern and the mold are single-use, each being destroyed when a casting is produced.

TYPES OF PATTERNS

Many types of patterns are used in the foundry industry, with selection being based on the number of duplicate castings required and the complexity of the part.

FIGURE 12-2 Single-piece pattern for a pinion gear.

One-piece or *solid patterns*, such as the one shown in Figure 12-2, are the simplest and often the least expensive type. They are essentially a duplicate of the part to be cast, modified only by the various allowances discussed in Chapter 11 and by the possible addition of core prints. One-piece patterns are relatively cheap to construct, but the subsequent molding process is usually slow. As a result, they are generally used when the shape is relatively simple and the number of duplicate castings is rather small.

If the one-piece pattern is simple in shape and contains a flat surface, it can be placed directly on a *follow board*. The entire mold cavity will be created in one segment of the mold, with the follow board forming the parting surface. If the parting plane is to be more centrally located, special follow boards are produced with inset cavities that position the one-piece pattern at the correct depth for the parting line. Figure 12-3 illustrates this technique, where the follow board again forms the parting surface.

Split patterns are used when moderate quantities of a casting are desired. The pattern is divided into two segments along what will become the parting plane of the mold. The bottom segment of the pattern is positioned in the drag portion of a flask, and the bottom segment of the mold is produced. This portion of the flask is then inverted, and the upper segment of the pattern and flask are attached. Tapered pins in the cope half of the pattern align with holes in the drag segment to assure proper positioning. Mold material is then packed around the full pattern to form the upper segment (*cope*) of the mold. The two segments of the flask are separated, and the pattern pieces are removed to produce the mold cavity. Sprues and runners are cut, and the mold is then reassembled, ready for

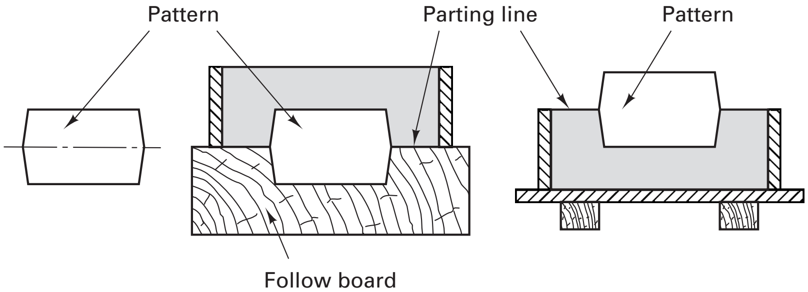

FIGURE 12-3 Method of using a follow board to position a single-piece pattern and locate a parting surface. The final figure shows the flask of the previous operation (the drag segment) inverted in preparation for construction of the upper portion of the mold (cope segment).

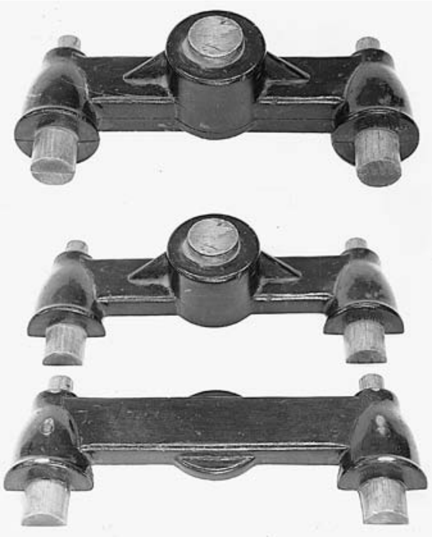

FIGURE 12-4 Split pattern, showing the two sections together and separated. The light-colored portions are core prints.

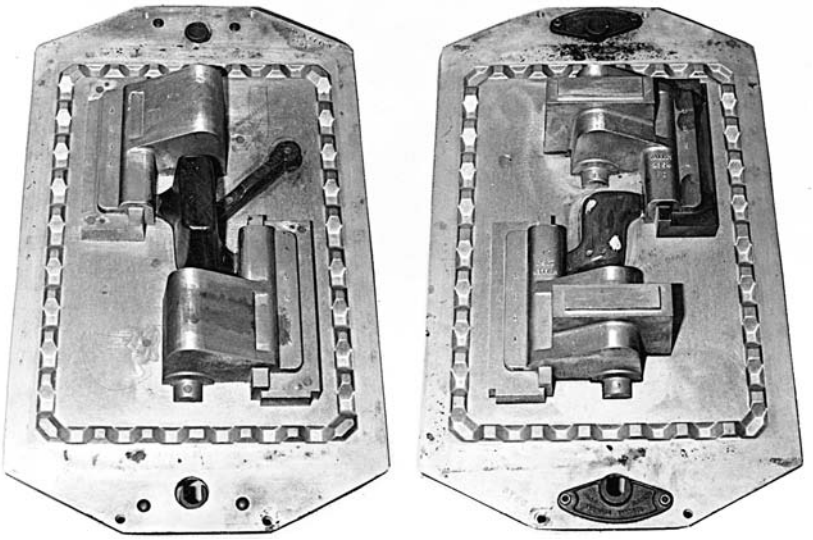

FIGURE 12-5 Match-plate pattern used to produce two identical parts in a single flask. (Left) Cope side; (right) drag side. (*Note:* The views are opposite sides of a single-pattern board.)

pour. Figure 12-4 shows a split pattern that also contains several core prints (lighter color).

Match-plate patterns, like the one shown in Figure 12-5, further simplify the process and can be coupled with modern molding machines to produce large quantities of duplicate molds. The cope and drag segments of a split pattern are permanently fastened to opposite sides of a wood or metal *match plate*. The match plate is positioned between the upper and lower flask segments. Mold material is then packed on both sides of the match plate to form the cope and drag segments of a two-part mold. The mold sections are then separated and the match-plate pattern is removed. The pins and guide holes ensure that the cavities in the cope and drag will be in proper alignment upon reassembly. The necessary gates, runners, and risers are usually incorporated on the match plate as well. This guarantees that these features will be uniform and of the proper size in each mold, thereby reducing the possibility of defects. Figure 12-5 further illustrates the common practice of including more than one pattern on a single match plate.

When large quantities of identical parts are to be produced, or when the casting is quite large, it may be desirable to have the cope and drag halves of split patterns attached to separate pattern boards. These *cope-and-drag patterns* enable independent molding of the cope and drag segments of a mold. Large molds can be handled more easily in separate segments, and small molds can be made at a faster rate if a machine is only producing one segment. Figure 12-6 shows the mating pieces of a typical cope-and-drag pattern.

When the geometry of the product is such that a one-piece or two-piece pattern could not be removed from the molding sand, a *loose-piece pattern* can sometimes be de-

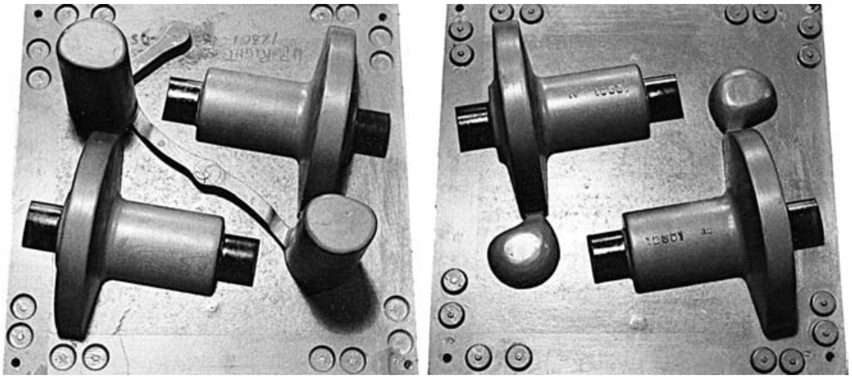

FIGURE 12-6 Cope-and-drag pattern for producing two heavy parts. (Left) Cope section; (right) drag section. (*Note:* These are two separate pattern boards.)

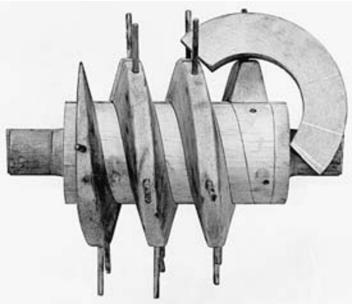

FIGURE 12-7 Loose-piece pattern for molding a large worm gear. After sufficient sand has been packed around the pattern to hold the pieces in position, the wooden pins are withdrawn. The mold is then completed, after which the pieces of the pattern can be removed in a designated sequence.

veloped. Separate pieces are joined to a primary pattern segment by beveled grooves or pins (Figure 12-7). After molding, the primary segment of the pattern is withdrawn. The hole that is created then permits the remaining segments to be sequentially extracted. Loose-piece patterns are expensive. They require careful maintenance, slow the molding process, and increase molding costs. They do, however, enable the sand casting of complex shapes that would otherwise require the full-mold, lost-foam, or investment processes.

SANDS AND SAND CONDITIONING

The sand used to make molds must be carefully prepared if it is to provide satisfactory and uniform results. Ordinary silica (SiO_2), zircon, olivine, or chromite sands are compounded with additives to meet four requirements:

1. *Refractoriness*: the ability to withstand high temperatures without melting, fracture, or deterioration
2. *Cohesiveness* (also referred to as *bond*): the ability to retain a given shape when packed into a mold
3. *Permeability*: the ability of mold cavity, mold, and core gases to escape through the sand
4. *Collapsibility*: the ability to accommodate metal shrinkage after solidification and provide for easy removal of the casting through mold disintegration (*shakeout*)

Refractoriness is provided by the basic nature of the sand. Cohesiveness, bond, or strength is obtained by coating the sand grains with clays, such as bentonite, kaolinite, or illite, that become cohesive when moistened. Collapsibility is sometimes enhanced by adding cereals or other organic materials, such as cellulose, that burn out when they come in contact with the hot metal. The combustion of these materials reduces both the volume and strength of the restraining sand. Permeability is a function of the size of the sand particles, the amount and type of clay or bonding agent, the moisture content, and the compacting pressure.

Good molding sand always represents a compromise between competing factors. The size of the sand particles, the amount of bonding agent (such as clay), the moisture content, and the organic additives are all selected to obtain an acceptable compromise among the four basic requirements. The overall composition must be carefully controlled to ensure satisfactory and consistent results. Since molding material is often reclaimed and recycled, the temperature of the mold during pouring and solidification is also important. If organic materials have been incorporated into the mix to provide collapsibility, a portion will burn during the pour. Adjustments will be necessary, and ultimately some or all of the mold material may have to be discarded and replaced with new.

A typical green-sand mixture contains about 88% silica sand, 9% clay, and 3% water. To achieve good molding, it is important for each grain of sand to be coated uniformly with the proper amount of additive agents. This is achieved by putting the ingredients through a *muller*, a device that kneads, rolls, and stirs the sand. Figure 12-8 shows both a continuous and batch-type muller, with each producing the desired mixing

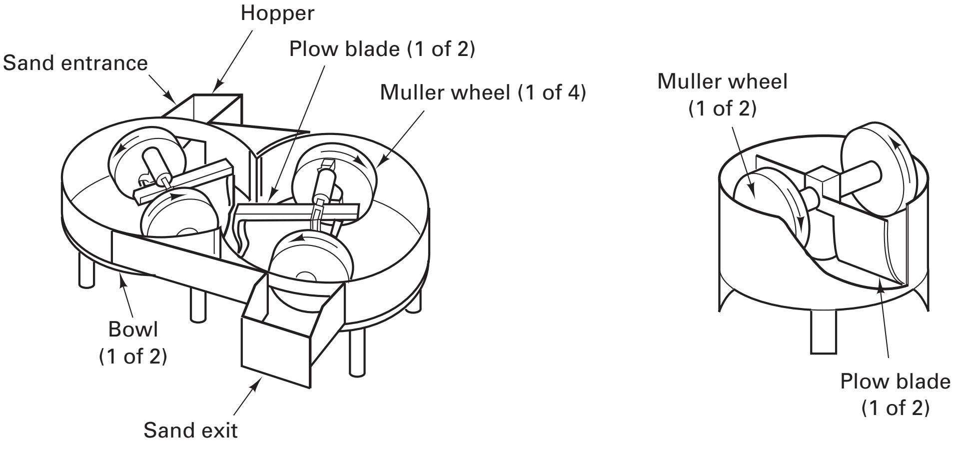

FIGURE 12-8 Schematic diagram of a continuous (left) and batch-type (right) sand muller. Plow blades move and loosen the sand, and the muller wheels compress and mix the components. *(Courtesy of ASM International. Metals Park, OH.)*

through the use of rotating blades that lift, fluff, and redistribute the material and wheels that compress and squeeze. After mixing, the sand is often discharged through an aerator, which fluffs it for further handling.

SAND TESTING

If a foundry is to produce high-quality products, it is important that it maintain a consistent quality in its molding sand. The sand itself can be characterized by grain size, grain shape, surface smoothness, density, and contaminants. Blended molding sand can be characterized by moisture content, clay content, and *compactability*. Key properties of compacted sand or finished molds include *mold hardness*, *permeability*, and *strength*. Standard tests and procedures have been developed to evaluate many of these properties.

Grain size can be determined by shaking a known amount of clean, dry sand downward through a set of 11 standard screens or sieves of decreasing mesh size. After being shaken for 15 minutes, the amount of material remaining on each sieve is weighed, and these weights are used to compute an AFS (American Foundry Society) grain fineness number.

Moisture content can be determined by a special device that measures the electrical conductivity of a small sample of compressed sand. A more direct method is to measure the weight lost by a 50-gram sample after it has been subjected to a temperature of about 110°C (230°F) for sufficient time to drive off all the water.

Clay content is determined by washing the clay from a 50-gram sample of molding sand, using water that contains sufficient sodium hydroxide to make it alkaline. Several cycles of agitation and washing may be required to fully remove the clay. The remaining sand is then dried and weighed to determine the amount of clay removed from the original sample.

Permeability and strength tests are conducted on compacted sands, using a *standard rammed specimen*. An amount of sand is first placed into a 2-inch-diameter steel tube. A 14-pound weight is then dropped on it three times from a height of 2 inches, and the height of the resulting specimen must be within $\frac{1}{32}$ inch of a targeted 2-inch height.

Permeability is a measure of how easily gases can pass through the narrow voids between the sand grains. Air in the mold before pouring, plus the steam that is produced when the hot metal contacts the moisture in the sand along with various combustion gases, must all be allowed to escape, rather than prevent mold filling or be trapped in the casting as porosity or blowholes. During the permeability test, shown schematically in Figure 12-9, a sample tube containing the standard rammed specimen is subjected to an air pressure of 10 g/cm^2. By means of either a flow rate determination or a measurement of the steady-state pressure between the orifice and the sand specimen, an *AFS permeability number*[1] can be computed. Most test devices are now calibrated to provide a direct readout of this number.

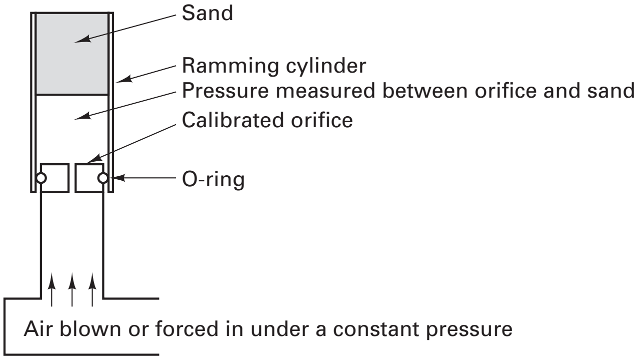

FIGURE 12-9 Schematic of a permeability tester in operation. A standard sample in a metal sleeve is sealed by an O-ring onto the top of the unit while air is passed through the sand. *(Courtesy of Dietert Foundry Testing Equipment Inc, Detroit, MI)*

---

[1] The AFS permeability number is defined as:

$$\text{AFS number} = (V \times H)/(P \times A \times T)$$

where V is the volume of air (2000 cm^3), H is the height of the specimen (5.08 cm), P is the pressure (10 g/cm^2), A is the cross-section area of the specimen (20.268 cm^2), and T is the time in seconds to pass a flow of 2000 cm^3 of air through the specimen. Substituting each of the above constants, the permeability number becomes equal to $3000.2/T$.

All molding material must have sufficient strength to retain the integrity of the mold cavity while the mold is being handled between molding and pouring. The mold material must also withstand the erosion of the liquid metal as it flows into the mold and the pressures induced by a column of molten metal. The *compressive strength* of the sand (also referred to as *green compressive strength*) is a measure of the mold strength at this stage of processing. It is determined by removing the rammed specimen from the compacting tube and placing it in a mechanical testing device. A compressive load is then applied until the specimen breaks, which usually occurs in the range of 10 to 30 psi (0.07 to 0.2 MPa). If there is too little moisture in the sand, the grains will be poorly bonded and strength will be poor. If there is excess moisture, the extra water acts as a lubricant and strength is again poor. In between, there is a condition of maximum strength with an optimum water content that will vary with the content of other materials in the mix. A similar optimum also applies to permeability, since unwetted clay blocks vent passages, as does excess water. Sand coated with a uniform thin film of moist clay provides the best molding properties. A ratio of one part water to three parts clay (by weight) is often a good starting point.

FIGURE 12-10 Sand mold hardness tester. *(Courtesy of Dietert Foundry Testing Equipment Inc., Detroit, MI)*

The *hardness* of compacted sand can give additional insight into the strength and permeability characteristics of a mold. Hardness can be determined by the resistance of the sand to the penetration of a 0.2-in. (5.08-mm)-diameter spring-loaded steel ball. A typical test instrument is shown in Figure 12-10.

Compactibility is determined by sifting loose sand into a steel cylinder, leveling off the column, striking it three times with the standard weight (as in making a standard rammed specimen), and then measuring the final height. The *percent compactibility* is the change in height divided by the original height, times 100%. This value can often be correlated with the moisture content of the sand, where a compactibility of around 45% indicates a proper level of moisture. A low compactibility is usually associated with too little moisture.

SAND PROPERTIES AND SAND-RELATED DEFECTS

The characteristics of the sand granules themselves can be very influential in determining the properties of foundry molding material. Round grains give good permeability and minimize the amount of clay required because of their low surface area. Angular sands give better green strength because of the mechanical interlocking of the grains. Large grains provide good permeability and better resistance to high-temperature melting and expansion, while fine-grained sands produce a better surface finish on the final casting. Uniform-size sands give good permeability, while a distribution of sizes enhances surface finish.

Silica sand is cheap and lightweight, but when hot metal is poured into a silica sand mold, the sand becomes hot, and at or about 585°C (1085°F) it undergoes a phase transformation that is accompanied by a substantial expansion in volume. Because sand is a poor thermal conductor, only the sand that is adjacent to the mold cavity becomes hot and expands. The remaining material stays fairly cool, does not expand, and often provides a high degree of mechanical restraint. Because of this uneven heating, the sand at the surface of the mold cavity may buckle or fold. Castings with large, flat surfaces are more prone to *sand expansion defects* since a considerable amount of expansion must occur in a single direction.

Sand expansion defects can be minimized in a number of ways. Certain particle geometries permit the sand grains to slide over one another, thereby relieving the expansion stresses. Excess clay can be added to absorb the expansion, or volatile additives, such as cellulose, can be added to the mix. When the casting is poured, the cellulose burns, creating voids that can accommodate the sand expansion. Another alternative is the use of olivine or zircon sand in place of silica. Since these sands do not undergo phase transformations upon heating, their expansion is only about one-half that of silica sand. Unfortunately, these sands are much more expensive and heavier in weight than the more commonly used silica.

Trapped or evolved gas can create gas-related *voids* or *blows* in finished castings. The most common causes are low sand permeability (often associated with angular, fine, or wide-size distribution sands, fine sand additives, and overcompaction) and large

TABLE 12-1 Desirable Properties of a Sand-Based Molding Material

1. Is inexpensive in bulk quantities
2. Retains properties through transportation and storage
3. Uniformly fills a flask or container
4. Can be compacted or set by simple methods.
5. Has sufficient elasticity to remain undamaged during pattern withdrawal
6. Can withstand high temperatures and maintains its dimensions until the metal has solidified
7. Is sufficiently permeable to allow the escape of gases
8. Is sufficiently dense to prevent metal penetration
9. Is sufficiently cohesive to prevent wash-out of mold material into the pour stream
10. Is chemically inert to the metal being cast
11. Can yield to solidification and thermal shrinkage, thereby preventing hot tears and cracks
12. Has good collapsibility to permit easy removal and separation of the casting
13. Can be recycled

amounts of evolved gas due to high mold-material moisture or excessive amounts of volatiles. If adjustments to the mold composition are not sufficient to eliminate the voids, vent passages may have to be cut into the mold, a procedure that may add significantly to the mold-making cost.

Molten metal can also penetrate between the sand grains, causing the mold material to become embedded in the surface of the casting. This defect, known as *penetration*, can be the result of high pouring temperatures (excess fluidity), high metal pressure (possibly due to excessive cope height or pouring from too high an elevation above the mold), or the use of high-permeability sands with coarse, uniform particles. Fine-grained materials, such as silica flour, can be blended in to fill the voids, but this reduces permeability and increases the likelihood of both gas and expansion defects.

Hot tears or *cracks* can form in castings made from metals or alloys with large amounts of solidification shrinkage. As the metal contracts during solidification and cooling to room temperature, it may find itself restrained by a strong mold or core. Tensile stresses can develop while the metal is still partially liquid or fully solidified but still hot and weak. If these stresses become great enough, the casting will crack. Hot tears are often attributed to poor mold collapsibility. Additives, such as cellulose, can be used to improve the collapsibility of sand molds.

Table 12-1 summarizes the many desirable properties of a sand-based molding material.

THE MAKING OF SAND MOLDS

When only a few castings are to be made, *hand ramming* is often the preferred method of packing sand to make a sand mold. Hand ramming, however, is slow, labor intensive, and usually results in nonuniform compaction. For normal production, sand molds are generally made using specially designed molding machines. The various methods differ in the type of flask, the way the sand is packed within the flask, whether mechanical assistance is provided to turn or handle the mold, and whether a flask is even required. In all cases, however, the molding machines greatly reduce the labor and required skill, and also lead to castings with good dimensional accuracy and consistency.

Molding usually begins with a pattern, like the match-plate pattern discussed earlier, and a *flask*. The flasks may be straight-walled containers with guide pins or removable jackets, and they are generally constructed of lightweight aluminum or magnesium. Figure 12-11 shows a snap flask, so named because it is designed to snap open for easy removal after the mold material has been packed in place.

The mixed sand (mold material) can be packed in the flask by one or more basic techniques. A *sand slinger* uses a rotating impeller to fling or throw sand against the

FIGURE 12-11 Bottom and top halves of a snap flask. (Left) drag segment in closed position; (right) cope segment with latches opened for easy removal.

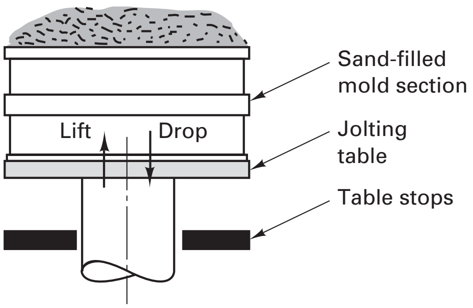

FIGURE 12-12 Jolting a mold section. (*Note*: The pattern is on the bottom, where the greatest packing is expected.)

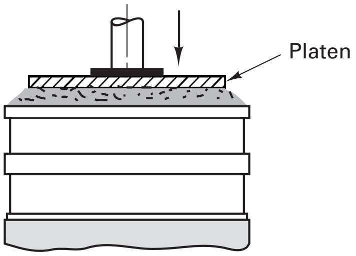

FIGURE 12-13 Squeezing a sand-filled mold section. While the pattern is on the bottom, the highest packing will be directly under the squeeze head.

pattern. The slinger is manipulated to progressively deposit compacted sand into the mold. Sand slinging is a common method of achieving uniform sand compaction when making large molds and large castings.

In a method known as *jolting*, a flask is positioned over a pattern, filled with sand, and the pattern, flask, and sand are then lifted and dropped several times, as shown in Figure 12-12. The weight and kinetic energy of the sand produces optimum packing at the bottom of the mass, that is, around the pattern. Jolting machines can be used on the first half of a match-plate pattern or on both halves of a cope-and-drag operation.

Squeezing machines use an air-operated squeeze head, a flexible diaphragm, or small, individually activated squeeze heads to compact the sand. The squeezing motion provides firm packing adjacent to the squeeze head, with density diminishing as you move farther into the mold. Figure 12-13 illustrates the squeezing process, and Figure 12-14 compares the density achieved by squeezing with a flat plate and squeezing with a flexible diaphragm.

In match-plate molding, a combination of jolting and squeezing is often used to produce a more uniform density throughout the mold. The match-plate pattern is positioned between the cope and drag sections of a flask, and the assembly is placed drag side up on the molding machine. A parting compound is sprinkled on the pattern, and the drag section of the flask is filled with mixed sand. The entire assembly is then jolted a specified number of times to pack the sand around the drag side of the pattern. A squeeze head is then swung into place, and pressure is applied to complete the drag portion of the mold. The entire flask is then inverted, and a squeezing operation is performed to compact loose sand in the cope segment. (*Note:* Jolting here might cause the already-compacted sand to break free of the inverted drag section of the pattern!) Since the drag segment sees both jolting and squeezing, while the cope is only squeezed, the pattern side with the greatest detail is generally placed in the drag. If the cope and drag segments of a mold are made on separate machines (using separate cope-and-drag patterns), the combination of jolting and squeezing can be performed on each segment of the mold.

The sprue hole is most often cut by hand, with this operation being performed before removal of the pattern to prevent loose sand from falling into the mold cavity. The

FIGURE 12-14 Schematic diagram showing relative sand densities obtained by flat-plate squeezing, where all areas get vertically compressed by the same amount of movement (left) and by flexible-diaphragm squeezing, where all areas flow to the same resisting pressure (right).

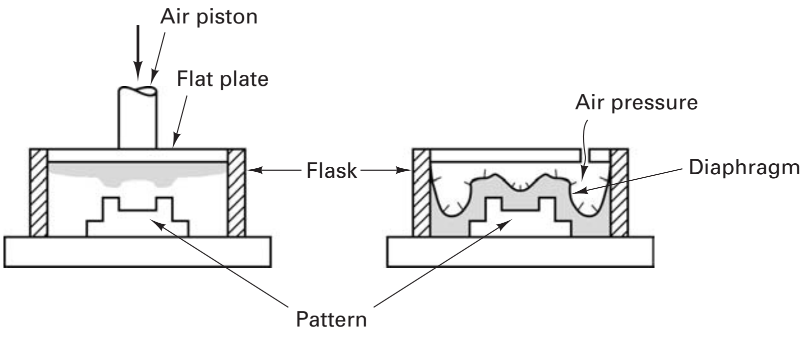

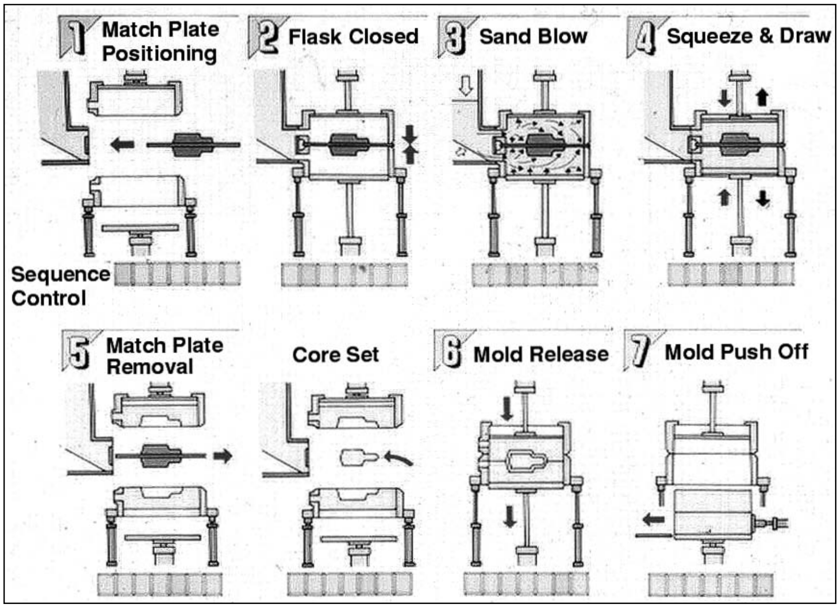

FIGURE 12-15 Activity sequence for automatic match-plate molding. Green sand is blown from the side and compressed vertically. The final mold is ejected from the flask and poured in a flaskless condition. (From "Five Considerations for Automatic Matchplate Molding," *Engineered Castings Solutions,* Winter, 2001, American Foundry Society, Schaumberg, IL.)

pouring basin may also be hand cut, or it may be shaped by a protruding segment on the squeeze board. The gates and runners are usually included on the pattern.

The pattern board is removed and the segments of the mold are reassembled ready for pour. Heavy metal weights are often placed on top of the molds to prevent the cope section from rising and "floating" when the hydrostatic pressure of the molten metal presses upward. The weights are left in place until solidification is complete, and they are then moved to other molds.

For mass-production molding, a number of automatic mold-making methods have been developed. These include *automatic match-plate molding*, automatic cope-and-drag molding, and methods that produce some form of stacked segments. Figure 12-15 shows the production sequence for one of the variations of automatic match-plate molding, where the sand is introduced into the cope-and-drag mold segments from the side and then vertically compressed. The two-part cope-and-drag mold is produced in one station, with a single pattern and one machine squeeze cycle. The compressed blocks are extracted from the molding machine and are poured in a flaskless condition.

Figure 12-16 depicts the *vertically parted flaskless molding* process, where the pattern has been rotated into a vertical position and the cope-and-drag impressions are now incorporated into opposing sides of a compaction machine. Molding sand is deposited between the patterns and squeezed with a horizontal motion. The patterns are withdrawn, cores are set, and the mold block is then joined to those that were previously molded. Since each block contains both a right-hand cavity and a left-hand cavity, an entire mold is made with each cycle of the machine. (*Note*: Previous techniques required two separate molding operations to produce the individual cope and drag segments of a two-part mold.) A vertical gating system is usually included on one side of the pattern, and the

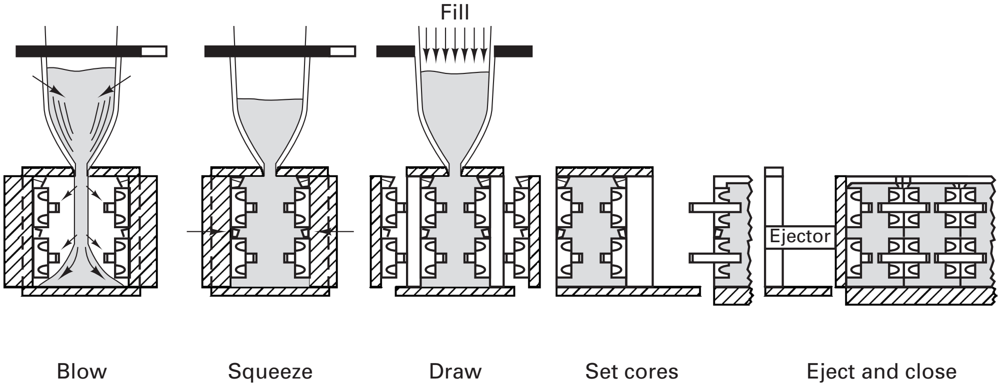

FIGURE 12-16 Vertically parted flaskless molding with inset cores. Note how one mold block now contains both the cope-and-drag impressions.

assembled molds are usually poured individually. If a common horizontal runner is used to connect multiple mold segments, the method is known as the *H-process*. Since metal cools as it travels through long runners, the individual cavities of the H-process often fill with different-temperature metal. To assure product uniformity, most producers reject the H-process, preferring to pour their vertically parted molds individually.

In *stack molding*, sections containing a cope impression on the bottom and a drag impression on the top are piled vertically on top of one another. Metal is poured down a common vertical sprue, which is connected to horizontal gating systems at each of the parting planes.

For molds that are too large to be made either by hand ramming or by one of the previously discussed molding processes, large flasks can be placed directly on the foundry floor. Various types of mechanical aids, such as a sand slinger, can then be used to add and pack the sand. Pneumatic rammers can provide additional tamping. Even larger molds can be constructed in sunken pits. Because of the size, complexity, and need for strength, pit molds are often constructed by assembling smaller sections of baked or dried sand. Added binders may be required to provide the strength required for these large molds.

GREEN-SAND, DRY-SAND, AND SKIN-DRIED MOLDS

Green-sand casting (where the term *green* implies that the mold material has not been fired or cured) is the most widely used process for casting both ferrous and nonferrous metals. The mold material is composed of sand blended with clay, water, and additives, and the molds fill by gravity feed. Tooling costs are low, and the entire process is one of the least expensive of the casting methods. Almost any metal can be cast, and there are few limits on the size, shape, weight, and complexity of the products. Over the years, green-sand casting has evolved from a manually intensive operation to a mechanized and automated system capable of producing over 300 molds per hour. As a result, it can be economically applied to both small and large production runs.

Design limitations are usually related to the rough surface finish and poor dimensional accuracy—and the resulting need for finish machining. Still other problems can be attributed to the low strength of the mold material and the moisture that is present in the clay-and-water binder. Table 12-2 provides a process summary for green-sand casting, and Figure 12-17 shows a variety of parts that have been produced in aluminum.

Some of the problems associated with the green-sand process can be reduced if we heat the mold to a temperature between 150° and 300°C (300° to 575°F) and bake it until most of the moisture is driven off. This drying strengthens the mold and reduces the volume of gas generated when the hot metal enters the cavity. *Dry-sand molds* are very durable and may be stored for a relatively long period of time. They are not very popular, however, because of the long time required for drying, the added cost of that operation, and the availability of alternative processes. An attractive compromise may be the production of a *skin-dried mold*, drying only the sand that is adjacent to the mold cavity. Torches are often used to perform the drying, and the water is usually removed to a depth of about 13 mm ($\frac{1}{2}$ inch).

TABLE 12-2 Green-Sand Casting

Process: Sand, bonded with clay and water, is packed around a wood or metal pattern. The pattern is removed, and molten metal is poured into the cavity. When the metal has solidified, the mold is broken and the casting is removed.

Advantages: Almost no limit on size, shape, weight, or complexity; low cost; almost any metal can be cast.

Limitations: Tolerances and surface finish are poorer than in other casting processes; some machining is often required; relatively slow production rate; a parting line and draft are needed to facilitate pattern removal; due to sprues, gates, and risers, typical yields range from 50% to 85%.

Common metals: Cast iron, steel, stainless steel, and casting alloys of aluminum, copper, magnesium, and nickel.

Size limits: 30 g to 3000 kg (1 oz to 6000 lb).

Thickness limits: As thin as 0.25 cm ($\frac{3}{32}$ in.), with no maximum.

Typical tolerances: 0.8 mm for first 15 cm ($\frac{1}{32}$ in. for first 6 in.), 0.003 cm for each additional cm; additional increment for dimensions across the parting line

Draft allowances: 1–3°.

Surface finish: 2.5–25 microns (100–1000 μin.) rms.

FIGURE 12-17 A variety of sand cast aluminum parts. *(Courtesy of Bodine Aluminum Inc., St. Louis, MO)*

The molds used for the casting of large steel parts are almost always skin dried, because the pouring temperatures for steel are significantly higher than those for cast iron. These molds may also be given a high-silica wash prior to drying to increase the refractoriness of the surface, or the more thermally stable zircon sand may be used as a facing. Additional binders, such as molasses, linseed oil, or corn flour, can be added to the facing sand to enhance the strength of the skin-dried segment.

SODIUM SILICATE–CO_2 MOLDING

Molds (and cores) can also be made from sand that receives its strength from the addition of 3% to 6% *sodium silicate*, an inorganic liquid binder, commonly known as *water glass*. The sand can be mixed with the liquid sodium silicate in a standard muller and can be packed into flasks by any of the methods discussed previously in this chapter. It remains soft and moldable until it is exposed to a flow of CO_2 gas. It then hardens in a matter of seconds by the reaction:

$$Na_2SiO_3 + CO_2 \rightarrow Na_2CO_3 + SiO_2 \quad \text{(colloidal)}$$

The CO_2 gas is nontoxic, nonflammable, and odorless, and no heating is required to initiate or drive the reaction. The sands achieve a tensile strength of about 40 psi (0.3 MPa) after five seconds of CO_2 gassing, with strength increasing to 100–200 psi (0.7–1.4 MPa) after 24 hours of aging. The hardened sands, however, have extremely poor collapsibility, making shakeout and core removal quite difficult. Unlike most other sands, the heating that occurs as a result of the pour actually serves to make the mold stronger (a phenomenon similar to the firing of a ceramic material). Additives that will burn out during the pour are frequently used to enhance the collapsibility of sodium silicate molds. Care must also be taken to prevent the carbon dioxide in the air from hardening the premixed sand before the mold-making process is complete.

A modification of this process can be used when certain portions of a mold require better accuracy, thinner sections, or deeper draws than can be achieved with ordinary molding sand. Sand mixed with sodium silicate is packed around a special metal pattern to a thickness of about 1 in., followed by regular molding sand as a backing material. After the sand is fully compacted, CO_2 is introduced through vents in the metal pattern. The adjacent sand is further hardened, and the pattern can be withdrawn with less possibility of damage to the mold.

NO-BAKE, AIR-SET, OR CHEMICALLY BONDED SANDS

An alternative to the sodium silicate–CO_2 process involves room-temperature chemical reactions that can occur between organic or inorganic resin binders and liquid curing agents or catalysts. The two or more components are mixed with sand just prior to the molding operation, and the curing reactions begin immediately. The molds (or cores) are then made in a reasonably rapid fashion, since the mix remains workable for only a short period of time. After a few minutes to a few hours at room temperature (depending on the specific binder and curing agent), the sands harden sufficiently to permit removal from the pattern without concern for distortion. After time for additional curing and the possible application of a refractory coating, the molds are then ready for pour.

No-bake molding can be used with virtually all engineering metals over a wide range of product sizes and weights. Since the time for mold curing slows production, no-bake molding is generally limited to low to medium-production quantities. The cost of no-bake molding is about 20–30% greater than green-sand molding, so no-bake is generally used where offsetting savings can be achieved. Products can also be designed with thinner sections, deeper draws, and smaller draft, and the rigid molds enable high dimensional precision, along with good surface finish. Since no-bake sand can be compacted by only light vibrations, patterns can often be made from wood, plastic, fiberglass, or even Styrofoam, thereby reducing pattern cost.

A wide variety of *no-bake sand systems* are available, with selection being based on the metal being poured, the cure time desired, the complexity and thickness of the casting, and possible desire for sand reclamation. Like the molds produced by the sodium silicate process, no-bake offers good hot strength and high resistance to mold-related casting defects. In contrast to the sodium silicate material, however, the no-bake molds decompose readily after the metal has been poured, providing excellent shakeout characteristics. Permeability must be good, since the heat causes the resins to decompose to hydrogen, water vapor, carbon oxides, and various hydrocarbons—all gases that must be vented.

Air-set molding and *chemically bonded sands* are other terms that have been used to describe the no-bake process.

SHELL MOLDING

Another popular sand casting process is *shell molding*, the basic steps of which are described below and illustrated in Figure 12-18.

1. The individual grains of fine silica sand are first precoated with a thin layer of thermosetting phenolic resin and heat-sensitive liquid catalyst. This material is then dumped, blown, or shot onto a metal pattern (usually some form of cast iron) that has been preheated to a temperature between 230° and 315°C (450° and 600°F). During a period of sustained contact, heat from the pattern partially cures (polymerizes and crosslinks) a layer of material. This forms a strong, solid-bonded region adjacent to the pattern. The actual thickness of cured material depends on the pattern temperature and the time of contact but typically ranges between 10 and 20 mm (0.4 to 0.8 in.).
2. The pattern and sand mixture are then inverted, allowing the excess (uncured) sand to drop free. Only the layer of partially cured material remains adhered to the pattern.
3. The pattern with adhering shell is then placed in an oven, where additional heating completes the curing process.

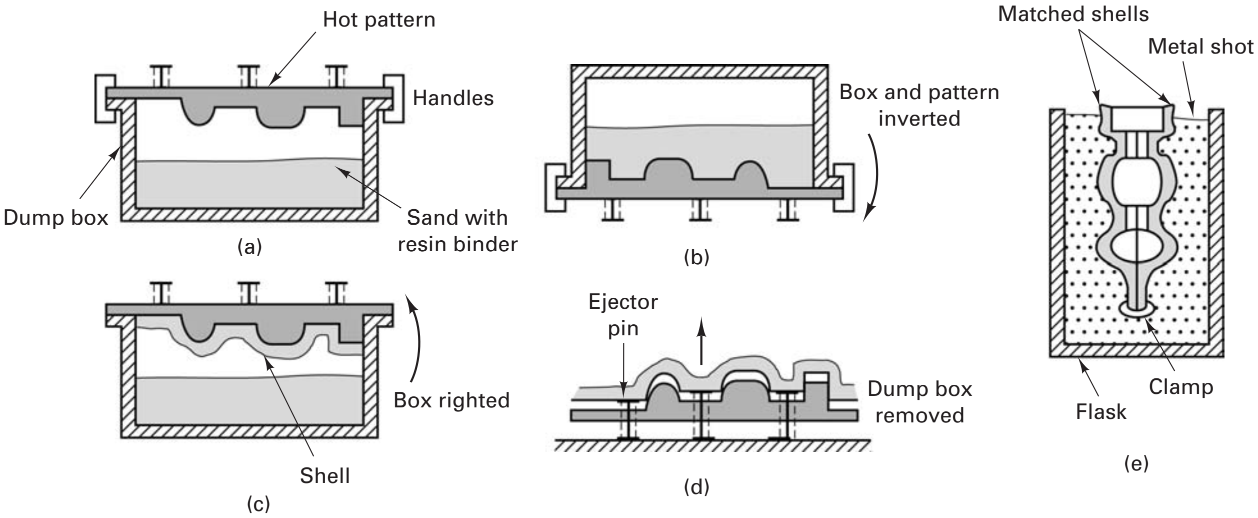

FIGURE 12-18 Schematic of the dump-box version of shell molding. (a) A heated pattern is placed over a dump box containing granules of resin-coated sand. (b) The box is inverted, and the heat forms a partially cured shell around the pattern. (c) The box is righted, the top is removed, and the pattern and partially cured sand is placed in an oven to further cure the shell. (d) The shell is stripped from the pattern. (e) Matched shells are then joined and supported in a flask ready for pouring.

4. The hardened shell, with tensile strength between 350 and 450 psi (2.4–3.1 MPa), is then stripped from the pattern.
5. Two or more shells are then clamped or glued together with a thermoset adhesive to produce a mold, which may be poured immediately or stored almost indefinitely.
6. To provide extra support during the pour, shell molds are often placed in a pouring jacket and surrounded with metal shot, sand, or gravel.

Because the shell is formed and partially cured around a metal pattern, the process offers excellent dimensional accuracy. Tolerances of 0.08 to 0.13 mm (0.003 to 0.005 in.) are quite common. Shell-mold sand is typically finer than ordinary foundry sand and, in combination with the plastic resin, produces a very smooth casting surface. Cleaning, machining, and other finishing costs can be significantly reduced, and the mold process offers an excellent level of product consistency.

Figure 12-19 shows a set of metal patterns, the two shells before clamping, and the resulting shell-mold casting. Machines for making shell molds vary from simple ones for small operations to large, completely automated devices for mass production. The cost of a metal pattern is often rather high, and its design must include the gate and runner system, since these cannot be cut after molding. Large amounts of expensive binder are required, but the amount of material actually used to form a thin shell is not that great. High productivity, low labor costs, smooth surfaces, and a level of precision that reduces the amount of subsequent machining all combine to make the process economical for even moderate quantities. The thin shell provides for the easy escape of gases that evolve during the pour, and the volume of evolved gas is rather low because of the absence of moisture in the mold material. When the shell becomes hot, some of the resin binder burns out, providing excellent collapsibility and shakeout characteristics. In addition, both the molding sand and completed shells can be stored for indefinite periods of time. Table 12-3 summarizes the features of shell molding.

OTHER SAND-BASED MOLDING METHODS

Over the years, a variety of processes have been proposed to overcome some of the limitations or difficulties of the more traditional methods. While few have become commercially significant, several are included here to illustrate the nature of these efforts.

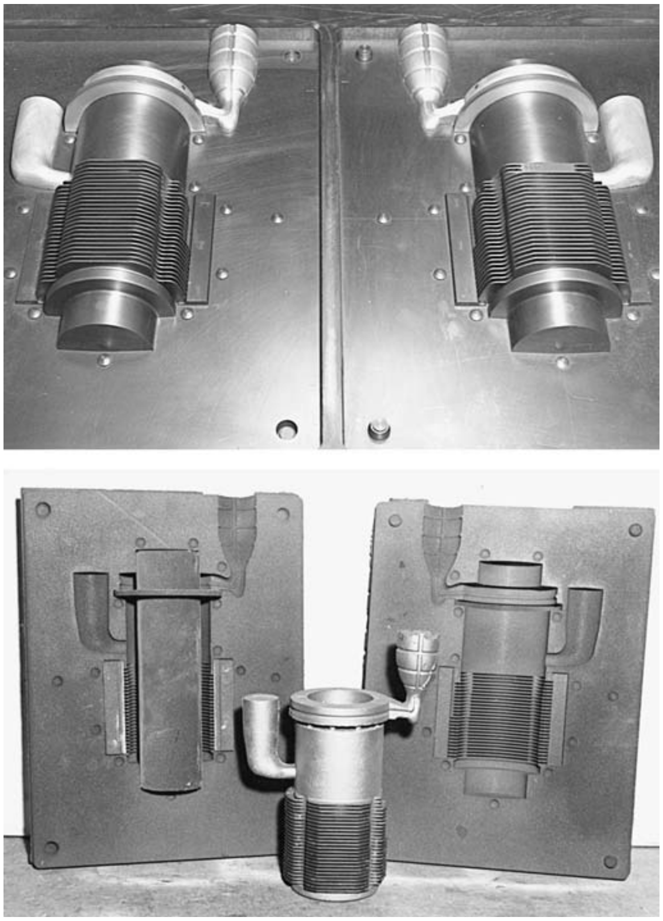

FIGURE 12-19 (Top) Two halves of a shell-mold pattern. (Bottom) The two shells before clamping, and the final shell-mold casting with attached pouring basin, runner, and riser. *(Courtesy of Shalco Systems, Lansing, MI.)*

In the *V-process* or *vacuum molding*, a vacuum performs the role of the sand binder. Figure 12-20 depicts the production sequence, which begins by draping a thin sheet of heat-softened plastic over a special vented pattern. A vacuum is applied within the pattern, drawing the sheet tight to its surface. A special vacuum flask is then placed over the pattern; the flask is filled with vibrated dry, unbonded sand; a sprue and pouring cup are formed; and a second sheet of plastic is placed over the mold. A vacuum is then drawn on the flask itself, compacting the sand to provide the necessary strength and hardness. The pattern vacuum is released, and the pattern is then withdrawn. The other segment of the two-part cope-and-drag mold is made in a similar fashion, and the mold halves are assembled to produce a plastic-lined cavity. The mold is then poured with a

TABLE 12-3 Shell-Mold Casting

Process: Sand coated with a thermosetting plastic resin is dropped onto a heated metal pattern, which cures the resin. The shell segments are stripped from the pattern and assembled. When the poured metal solidifies, the shell is broken away from the finished casting.

Advantages: Faster production rate than sand molding, high dimensional accuracy with smooth surfaces.

Limitations: Requires expensive metal patterns. Plastic resin adds to cost; part size is limited.

Common metals: Cast irons and casting alloys of aluminum and copper.

Size limits: 30 g (1 oz) minimum; usually less than 10 kg (25 lb); mold area usually less than 0.3 m^2 (500 in^2).

Thickness limits: Minimums range from 0.15 to 0.6 cm ($\frac{1}{16}$ to $\frac{1}{4}$ in.), depending on material.

Typical tolerances: Approximately 0.005 cm/cm or in/in.

Draft allowance: $\frac{1}{4}$ or $\frac{1}{2}$ degree.

Surface finish: $\frac{1}{3}$–4.0 microns (50–150 μin.) rms.

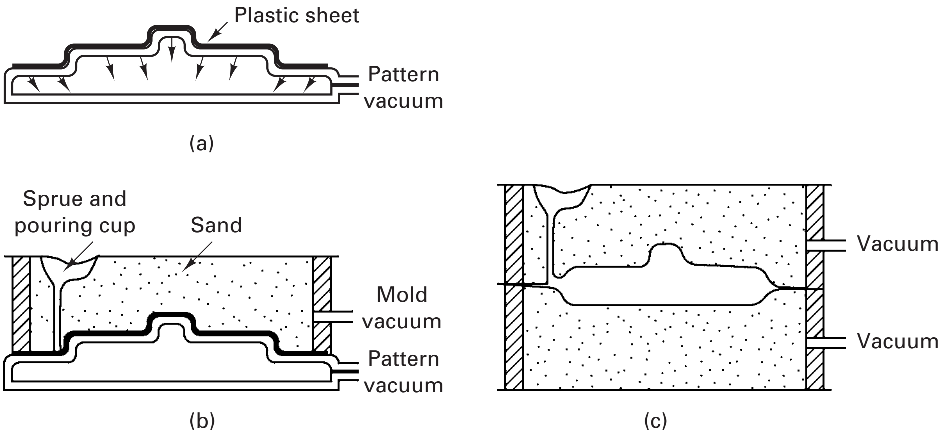

FIGURE 12-20 Schematic of the V-process or vacuum molding. (a) A vacuum is pulled on a pattern, drawing a heated shrink-wrap plastic sheet tightly against it. (b) A vacuum flask is placed over the pattern and filled with dry unbonded sand, a pouring basin and sprue are formed; the remaining sand is leveled; a second heated plastic sheet is placed on top; and a mold vacuum is drawn to compact the sand and hold the shape. (c) With the mold vacuum being maintained, the pattern vacuum is then broken and the pattern is withdrawn. The cope and drag segments are assembled, and the molten metal is poured.

vacuum of 300–600 torr being maintained in both the cope and drag segments of the flask. During the pour, the thin plastic film melts and vaporizes and is replaced immediately by metal, allowing the vacuum to continue holding the sand in shape until the casting has cooled and solidified. When the vacuum is released, the sand reverts to its loose, unbonded state and falls away from the casting.

With the vacuum serving as the binder, there is a total absence of moisture-related defects; binder cost is eliminated; and the loose, dry sand is completely and directly reusable. With no clay, water, or other binder to impair permeability, finer sands can be used, resulting in better surface finish in the resulting castings. With no burning binders, there are no fumes generated during the pouring operation. Shakeout characteristics are exceptional, since the mold collapses when the vacuum is released. Unfortunately, the process is relatively slow because of the additional steps and the time required to pull a sufficient vacuum. The V-process is used primarily for the production of prototype, frequently modified, or low- to medium-volume parts (more than 10 but less than 15,000).

In the *Eff-set process*, wet sand with just enough clay to prevent mold collapse is packed around a pattern. The pattern is removed, and the surface of the mold is sprayed with liquid nitrogen. The ice that forms serves as the binder, and the molten metal is poured into the mold while the surface is in its frozen condition. This process offers low binder cost and excellent shakeout but is not being used in a commercial operation.

■ 12.3 CORES AND CORE MAKING

Casting processes are unique in their ability to easily incorporate complex internal cavities or reentrant sections. To produce these features, however, it is often necessary to use *cores* as part of the mold. Figure 12-21 shows an example of a product that makes extensive use of cores to produce the various cylinders, cooling passages, and other internal features. While cores constitute an added cost, they significantly expand the capabilities of the process.

Cores can often be used to improve casting design and optimize processes. Consider the simple belt pulley shown schematically in Figure 12-22. Various methods of fabrication are suggested in the four sketches, beginning with the casting of a solid form and the subsequent machining of the through-hole for the drive shaft. A large volume of metal would have to be removed by a secondary machining process. A more economical approach would be to make the pulley with a cast-in hole. In Figure 12-22b each half of the pattern includes a tapered hole, which fills with the same green sand being used for the remainder of the mold. These protruding sections are an integral part

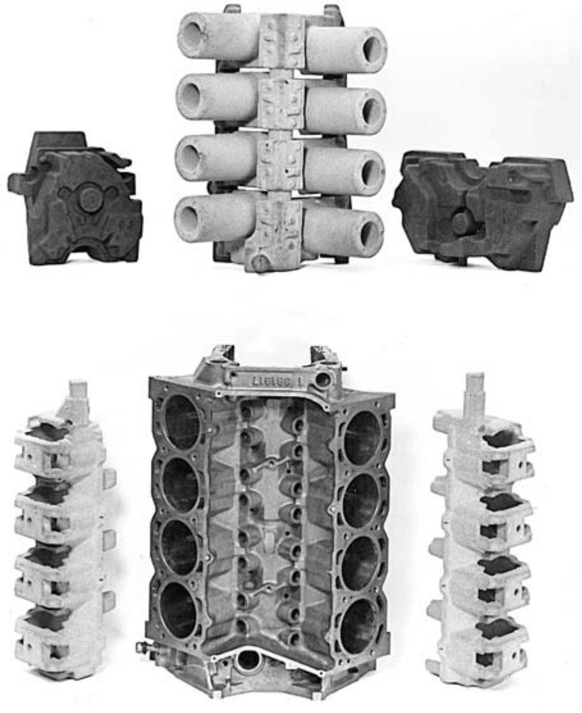

FIGURE 12-21 V-8 engine block (bottom center) and the five dry-sand cores that are used in the construction of its mold. *(Courtesy of General Motors Corporation, Detroit, MI.)*

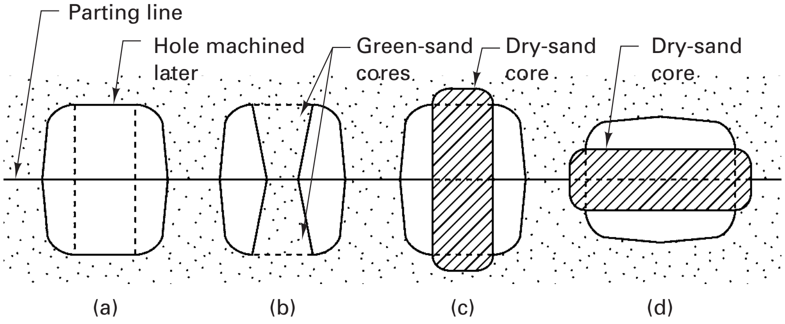

FIGURE 12-22 Four methods of making a hole in a cast pulley. Three involve the use of a core.

of the mold, but they are also known as *green-sand cores*. Green-sand cores have a relatively low strength. If the protrusions are long or narrow, it might be difficult to withdraw the pattern without breaking them, or they might not have enough strength to even support their own weight. For long cores, a considerable amount of machining may still be required to remove the draft that must be provided on the pattern. In addition, green-sand cores are not an option for more complex shapes, where it might be impossible to withdraw the pattern.

Dry-sand cores can overcome some of the cited difficulties. These cores are produced separate from the remainder of the mold and are then inserted into core prints that hold them in position. The sketches in Figures 12-22c and 12-22d show dry-sand cores in the vertical and horizontal positions. Dry-sand cores can be made in a number of ways. In each, the sand, mixed with some form of binder, is packed into a wood or metal core box that contains a cavity of the desired shape. A *dump-core box* such as the one shown in Figure 12-23 offers the simplest approach. Sand is packed into

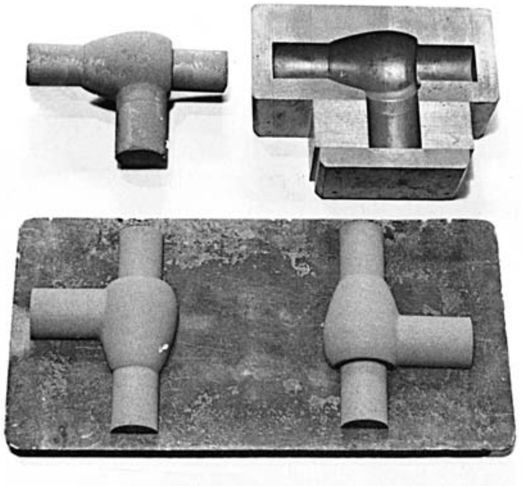

FIGURE 12-23 (Upper right) A dump-type core box; (bottom) two core halves ready for baking; and (upper left) a completed core made by gluing two opposing halves together.

the cavity and scraped level with the top surface (which acts like the parting line in a traditional mold). A wood or metal plate is then placed over the top of the box, and the box is inverted and lifted, leaving the molded sand resting on the plate. After baking or hardening, the core segments are assembled with hot-melt glue or some other bonding agent. Rough spots along the parting line are removed with files or sanding belts, and the final core may be given a thin coating to provide a smoother surface or greater resistance to heat. Graphite, silica, or mica can be sprayed or brushed onto the surface.

Single-piece cores can be made in a *split-core box*. Two halves of a core box are clamped together, with an opening in one or both ends through which sand is introduced and rammed. After the sand is compacted, the halves of the box are separated to permit removal of the core. Cores with a uniform cross section can be formed by a core-extruding machine and cut to the desired length as the product emerges. The individual cores are then placed in core supports for subsequent hardening. More complex cores can be made in core-blowing machines that use separating dies and receive the sand in a manner similar to injection molding or die casting.

Cores are frequently the most fragile part of a mold assembly. To provide the necessary strength, the various core-making processes utilize a number of special binders. In the *core-oil process*, sand is blended with about 1% vegetable or synthetic oil, along with 2–4% water and about 1% cereal or clay to help develop green strength (i.e., to help retain the shape prior to curing). The wet sand is blown or rammed into a relatively simple core box at room temperature. The fragile uncured cores are then gently transferred to flat plates or special supports and placed in convection ovens at 200° to 260°C (400° to 500°F) for curing. The heat causes the binder to cross-link or polymerize, producing a strong organic bond between the grains of sand. While the process is simple and the materials are inexpensive, the dimensional accuracy of the resultant cores is often difficult to maintain.

In the *hot-box method*, sand blended with a liquid thermosetting binder and catalyst is packed into a core box that has been heated to around 230°C (450°F). When the sand is heated, the initial stages of curing begin within 10 to 30 seconds. After this brief period, the core can be removed from the pattern and will hold its shape during subsequent handling. For some materials, the cure completes through an exothermic curing reaction. For others, further baking is required to complete the process.

In the above methods, cores must be handled in an uncured or partially cured state, and breakage or distortion is not uncommon. Processes that produce finished cores while still in the core box and do not require heating operations would appear to offer distinct advantages.

In the *cold-box process*, binder-coated sand is first blown into a room-temperature core box, which can now be made from wood, metal, or even plastic. The box is sealed, and a gas or vaporized catalyst is then passed through the permeable sand to polymerize the resin. In a variation of the process, hollow cores are produced by introducing small amounts of curing gas through holes in the core-box pattern, with the uncured sand in the center being dumped and reused. Unfortunately, the required gases tend to be either toxic (an amine gas) or odorous (SO_2), making special handling of both incoming and exhaust gas a process requirement.

Room-temperature cores can also be made with the *air-set* or *no-bake sands*. These systems eliminate the gassing operation of the cold-box process through the use of a reactive organic resin and a curing catalyst. As discussed previously, there is only a brief period of time to form the core once the components have been mixed. *Shell molding* is another core-making alternative, producing hollow cores with excellent strength and permeability.

Selecting the actual method of core production is usually based on a number of considerations, including production quantity, production rate, required precision, required surface finish, and the metal being poured. Certain metals may be sensitive to gases that are emitted from the cores when they come into contact with the hot metal. Other materials with low pouring temperatures may not break down the binder sufficiently to provide collapsibility and easy removal from the final casting.

To function properly, casting cores must have the following characteristics:

1. Sufficient strength before hardening if they will be handled in the "green" condition.
2. Sufficient hardness and strength after hardening to withstand handling and the forces of the casting process. As metal fills the mold, most cores want to "float." The cores must be strong enough to resist the induced stresses, and the supports must be sufficient to hold them in place. Flowing metal can also cause surface erosion. Compressive strength should be between 100 and 500 psi (0.7 to 3.5 MPa).
3. A smooth surface.
4. Minimum generation of gases when heated by the pour.
5. Adequate permeability to permit the escape of gas. Since cores are largely surrounded by molten metal, the gases must escape through the core.
6. Adequate refractoriness. Being surrounded by hot metal, cores can become quite a bit hotter than the adjacent mold material. They should not melt or adhere to the casting.
7. Collapsibility. After pouring, the cores must be weak enough to permit the casting to shrink as it cools, thereby preventing cracking. In addition, the cores must be easily removed from the interior of the finished product via shakeout.

Various techniques have been developed to enhance the natural properties of cores and core materials. Additional strength can be imparted by the addition of internal wires or rods. Collapsibility can be enhanced by producing hollow cores or by placing a material such as straw in the center. Hollow cores may be used to provide for the escape of trapped or evolved gases. Vent holes can be formed by pushing small wires into the core, and coke or cinders are sometimes placed in the center of large cores to enhance venting.

Since the gases must be expelled from the casting, and the core material itself must be removed to produce the desired hole or cavity, the cores must be connected to the outer surfaces of the mold cavity. Recesses at these connection points, known as *core prints*, are used to support the cores and hold them in proper position during mold filling. The dry-sand cores in Figures 12-22c and 12-22d are supported by core prints.

If the cores do not pass completely through the casting, where they can be supported on both ends, a single core print may not be able to provide sufficient support. Additional measures may also be necessary to support the weight of large cores or keep lighter ones from becoming buoyant as the molten metal fills the cavity. Small metal supports, called *chaplets*, can be placed between cores and the surfaces of a mold cavity, as illustrated in Figure 12-24. Because the chaplets are positioned within the mold cavity, they become an integral part of the finished casting. Chaplets should therefore be of the same, or at least comparable, composition as the material being poured. They should be large enough that they do not completely melt and permit the core to move, but small enough that their surface melts and fuses with the

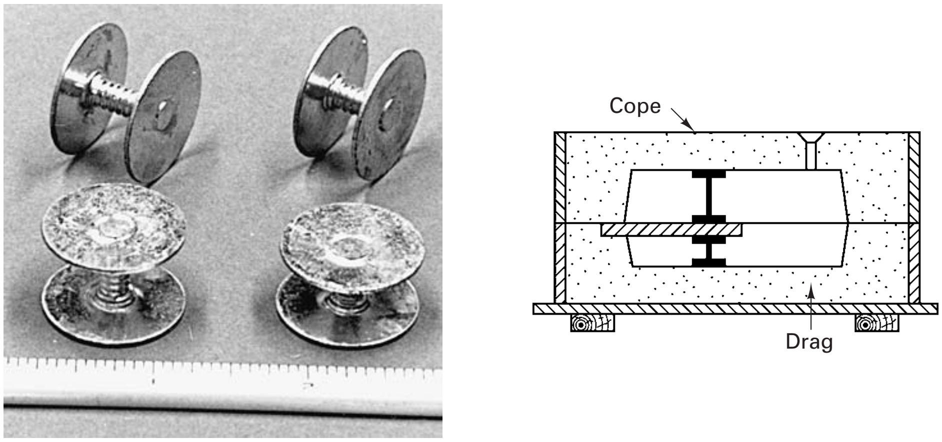

FIGURE 12-24 (Left) Typical chaplets. (Right) Method of supporting a core by use of chaplets (relative size of the chaplets is exaggerated).

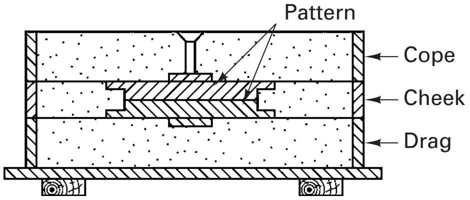

FIGURE 12-25 Method of making a reentrant angle or inset section by using a three-piece flask.

metal being cast. Since chaplets are one more source of possible defects and may become a location of weakness in the finished casting, efforts are generally made to minimize their use.

Additional sections of mold material can also be used to produce castings with reentrant angles. Figure 12-25 depicts a round pulley with a recessed groove around its perimeter. By using a third segment of flask, called a *cheek,* and adding a second parting plane, the entire mold can be made by conventional green-sand molding around withdrawable patterns. While additional molding operations are required, this may be an attractive approach for small production runs.

If we want to produce a large number of identical pulleys, rapid machine molding of a simple green-sand mold might be preferred. As shown in Figure 12-26, the pattern would be modified to include a seat for an inserted ring-shaped core. Molding time is reduced at the expense of a core box and a separate core-making operation.

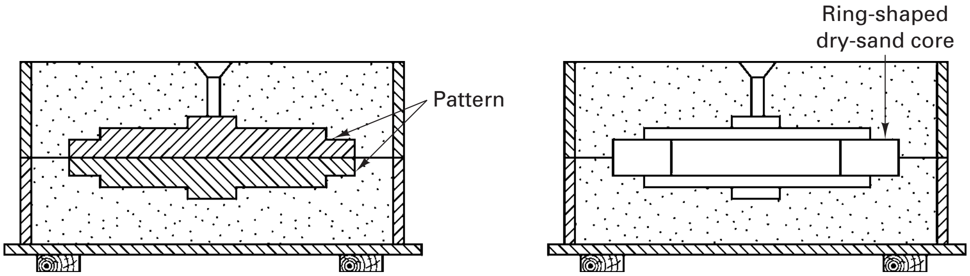

FIGURE 12-26 Molding an inset section using a dry-sand core.

12.4 OTHER EXPENDABLE-MOLD PROCESSES WITH MULTIPLE-USE PATTERNS

PLASTER MOLD CASTING

In *plaster molding* the mold material is plaster of paris (also known as calcium sulfate or gypsum), combined with various additives to improve green strength, dry strength, permeability, and castability. Talc or magnesium oxide can be added to prevent cracking and reduce the setting time. Lime or cement helps to reduce expansion during baking. Glass fibers can be added to improve strength, and sand can be used as a filler.

The mold material is first mixed with water, and the creamy slurry is then poured over a metal pattern (wood patterns tend to warp or swell) and allowed to set. Hydration of the plaster produces a hard mold that can be easily stripped from the pattern. (*Note:* Flexible rubber patterns can be used when complex angular surfaces or reentrant angles are required. The plaster is strong enough to retain its shape during pattern removal.) The plaster mold is then baked to remove excess water, assembled, and poured.

With metal patterns and plaster mold material, surface finish and dimensional accuracy are both excellent. Cooling is slow, since the plaster has low heat capacity and low thermal conductivity. The poured metal stays hot and can flow into thin sections and replicate fine detail, which can often reduce machining cost. Unfortunately, plaster casting is limited to the lower-melting-temperature nonferrous alloys (such as aluminum, copper, magnesium, and zinc). At the high temperatures of ferrous metal casting, the plaster would first undergo a phase transformation and then melt, and the water of hydration can cause the mold to explode. Table 12-4 summarizes the features of plaster mold casting.

TABLE 12-4 Plaster Casting

Process: A slurry of plaster, water, and various additives is poured over a pattern and allowed to set. The pattern is removed, and the mold is baked to remove excess water. After pouring and solidification, the mold is broken and the casting is removed.

Advantages: High dimensional accuracy and smooth surface finish; can reproduce thin sections and intricate detail to make net- or near-net-shaped parts.

Limitations: Lower-temperature nonferrous metals only; long molding time restricts production volume or requires multiple patterns; mold material is not reusable; maximum size is limited.

Common metals: Primarily aluminum and copper.

Size limits: As small as 30 g (1 oz) but usually less than 7 kg (15 lb).

Thickness limits: Section thickness as small as 0.06 cm (0.025 in.).

Typical tolerances: 0.01 cm on first 5 cm (0.005 in. on first 2 in.), 0.002 cm per additional cm (0.002 in. per additional in.)

Draft allowance: $\frac{1}{2}$–1 degree.

Surface finish: 1.3–4 microns (50–125 μin.) rms.

The Antioch process is a variation of plaster mold casting where the mold material is comprised of 50% plaster and 50% sand, mixed with water. An autoclave process is used to prepare the molds, which offer improved permeability and reduced solidification time. The addition of a foaming agent to a plaster–water mix can add fine air bubbles that increase the material volume by 50–100%. The resulting molds have much improved permeability compared to the conventional process.

CERAMIC MOLD CASTING

Ceramic mold casting (summarized in Table 12-5) is similar to plaster mold casting, except that the mold is now made from a ceramic material that can withstand the higher-melting-temperature metals. Much like the plaster process, ceramic molding can produce thin sections, fine detail, and smooth surfaces, thereby eliminating a considerable amount of finish machining. These advantages, however, must be weighed against the greater cost of the mold material. For large molds, the ceramic can be used to produce a facing around the pattern, which is then backed up by a less expensive material such as reuseable fireclay.

One of the most popular of the ceramic molding techniques is the *Shaw process*. A reusable pattern is positioned inside a slightly tapered flask, and a slurry-like mixture of refractory aggregate, hydrolyzed ethyl silicate, alcohol, and a gelling agent is poured on top. This mixture sets to a rubbery state that permits removal of both the pattern and the flask. The mold surface is then ignited with a torch. Most of the volatiles are consumed during the "burn-off," and a three-dimensional network of microscopic cracks (microcrazing) forms in the ceramic. The gaps are small enough to prevent metal penetration but large enough to provide venting of air and gas (permeability) and to accommodate both the thermal expansion of the ceramic particles during the pour and the subsequent shrinkage of the solidified metal. A baking operation then removes all of the remaining volatiles, making the mold hard and rigid. Ceramic molds are often preheated prior to pouring to ensure proper filling and to control the solidification characteristics of the metal.

TABLE 12-5 Ceramic Mold Casting

Process: Stable ceramic powders are combined with binders and gelling agents to produce the mold material.

Advantages: Intricate detail, close tolerances, and smooth finish.

Limitations: Mold material is costly and not reusable.

Common metals: Ferrous and high-temperature nonferrous metals are most common; can also be used with alloys of aluminum, copper, magnesium, titanium, and zinc.

Size limits: 100 grams to several thousand kilograms (several ounces to several tons).

Thickness limits: As thin as 0.13 cm (0.050 in.); no maximum.

Typical tolerances: 0.01 cm on the first 2.5 cm (0.005 in. on the first in.), 0.003 cm per each additional cm (0.003 in. per each additional in.).

Draft allowances: 1° preferred.

Surface finish: 2–4 microns (75–150 μin.) rms.

FIGURE 12-27 Group of intricate cutters produced by ceramic mold casting. *(Courtesy of Avnet Shaw Division of Avnet, Inc., Phoenix, AZ)*

Like plaster molding, the ceramic molding process can effectively produce small-size castings in small to medium quantities. Figure 12-27 shows a set of intricate cutters that were produced by this process.

EXPENDABLE GRAPHITE MOLDS

For metals such as titanium, which tend to react with many of the more common mold materials, powdered *graphite* can be combined with additives, such as cement, starch, and water, and compacted around a pattern. After "setting," the pattern is removed and the mold is fired at 1000°C (1800°F) to consolidate the graphite. The casting is poured, and the mold is broken to remove the product.

RUBBER-MOLD CASTING

Artificial elastomers can also be compounded in liquid form and poured over a pattern to produce a semirigid mold. These molds are sufficiently flexible to permit stripping from an intricate shape or patterns with reverse-taper surfaces. Unfortunately, rubber molds are generally limited to small castings and low-melting-point materials. The wax patterns used in investment casting are often made by rubber-mold casting, as are small quantities of finished parts made from plastics or metals that can be poured at temperatures below 250°C (500°F).

12.5 EXPENDABLE-MOLD PROCESSES USING SINGLE-USE PATTERNS

INVESTMENT CASTING

Investment casting is actually a very old process—used in ancient China and Egypt and more recently performed by dentists and jewelers for a number of years. It was not until the end of World War II, however, that it attained a significant degree of industrial importance. Products such as rocket components and jet engine turbine blades required the fabrication of high-precision complex shapes from high-melting-point metals that are not easily machined. Investment casting offers almost unlimited freedom in both the complexity of shapes and the types of materials that can be cast, and millions of investment castings are now produced each year.

Investment casting uses the same type of molding aggregate as the ceramic molding process and typically involves the following sequential steps:

1. *Produce a master pattern*—a modified replica of the desired product made from metal, wood, plastic, or some other easily worked material.
2. *From the master pattern, produce a master die*. This can be made from low-melting-point metal, steel, or possibly even wood. If a low-melting-point metal is used, the die may be cast directly from the master pattern. Rubber molds can also be made directly from the master pattern. Steel dies are often machined directly, eliminating the need for step 1.
3. *Produce wax patterns*. Patterns are made by pouring molten wax into the master die, or injecting it under pressure (injection molding), and allowing it to harden. Release agents, such as silicone sprays, are used to assist in pattern removal. Plastic and frozen mercury are alternate pattern materials. The polystyrene plastic may be preferred for producing thin and complex surfaces, where its higher strength and greater durability are desired. Frozen mercury is seldom used because of its cost, handling prob-

lems, and toxicity. If cores are required, they can generally be made from soluble wax or ceramic. The soluble wax cores are dissolved out of the patterns prior to further processing, while the ceramic cores remain and are not removed until after solidification of the metal casting.

4. *Assemble the wax patterns onto a common wax sprue*. Using heated tools and melted wax, a number of wax patterns can be attached to a central sprue and runner system to create a pattern cluster, or a *tree*. If the product is sufficiently complex that its pattern could not be withdrawn from a single master die, the pattern may be made in pieces and assembled prior to attachment.
5. *Coat the cluster or tree with a thin layer of investment material*. This step is usually accomplished by dipping into a watery slurry of finely ground refractory material. A thin but very smooth layer of investment material is deposited onto the wax pattern, ensuring a smooth surface and good detail in the final product.
6. *Form additional investment around the coated cluster*. After the initial layer has dried, the cluster can be redipped, but this time the wet ceramic is coated with a layer of sand or coarse refractory, a process called stuccoing. After drying, the process is repeated until the investment coating has the desired thickness (typically 5 to 15 mm or $\frac{3}{16}$ to $\frac{5}{8}$ inch with up to eight layers). As an alternative, the single-dipped cluster can be placed upside down in a flask and liquid investment material poured around it. The flask is then vibrated to remove entrapped air and ensure that the investment material now surrounds all surfaces of the cluster.
7. *Allow the investment to fully harden*.
8. *Remove the wax pattern from the mold by melting or dissolving*. Molds or trees are generally placed upside down in an oven where the wax can melt and run out, and any residue subsequently vaporizes. This step is the most distinctive feature of the process because it enables a complex pattern to be removed from a single-piece mold. Extremely complex shapes can be readily cast. (*Note:* In the early years of the process, only small parts were cast, and when the molds were placed in the oven, the molten wax was absorbed into the porous investment. Because the wax "disappeared," the process was called the *lost-wax process*, and the name is still used.)
9. *Heat the mold in preparation for pouring*. Heating to 550° to 1100°C (1000° to 2000°F) ensures complete removal of the mold wax, cures the mold to give added strength, and allows the molten metal to retain its heat and flow more readily into all of the thin sections and details. Mold heating also gives better dimensional control because the mold and the metal can shrink together during cooling.
10. *Pour the molten metal*. While gravity pouring is the simplest, other methods may be used to ensure complete filling of the mold. When complex, thin sections are involved, mold filling may be assisted by positive air pressure, evacuation of the air from the mold, or some form of centrifugal process.
11. *Remove the solidified casting from the mold*. After solidification, techniques such as mechanical chipping or vibration, high-pressure water jet, or sand blasting are used to break the mold and remove the mold material from the metal casting.

Figure 12-28 depicts the investment procedure, where the investment material fills the entire flask, and Figure 12-29 shows the shell-investment method. Table 12-6 summarizes the features of investment casting.

Compared to other methods of casting, investment casting is a complex process and tends to be rather expensive. However, its unique advantages can often justify its use, and many of the steps can be easily automated. Extremely complex shapes can be cast as a single piece. Thin sections, down to 0.40 mm (0.015 in.), can be produced. Excellent dimensional precision can be achieved in combination with very smooth as-cast surfaces. Machining can often be completely eliminated or greatly reduced. When machining is required, allowances of as little as 0.4 to 1 mm (0.015 to 0.040 in.) are usually ample. These capabilities are especially attractive when making products from the high-melting-temperature, difficult-to-machine metals that cannot be cast with plaster- or metal-mold processes.

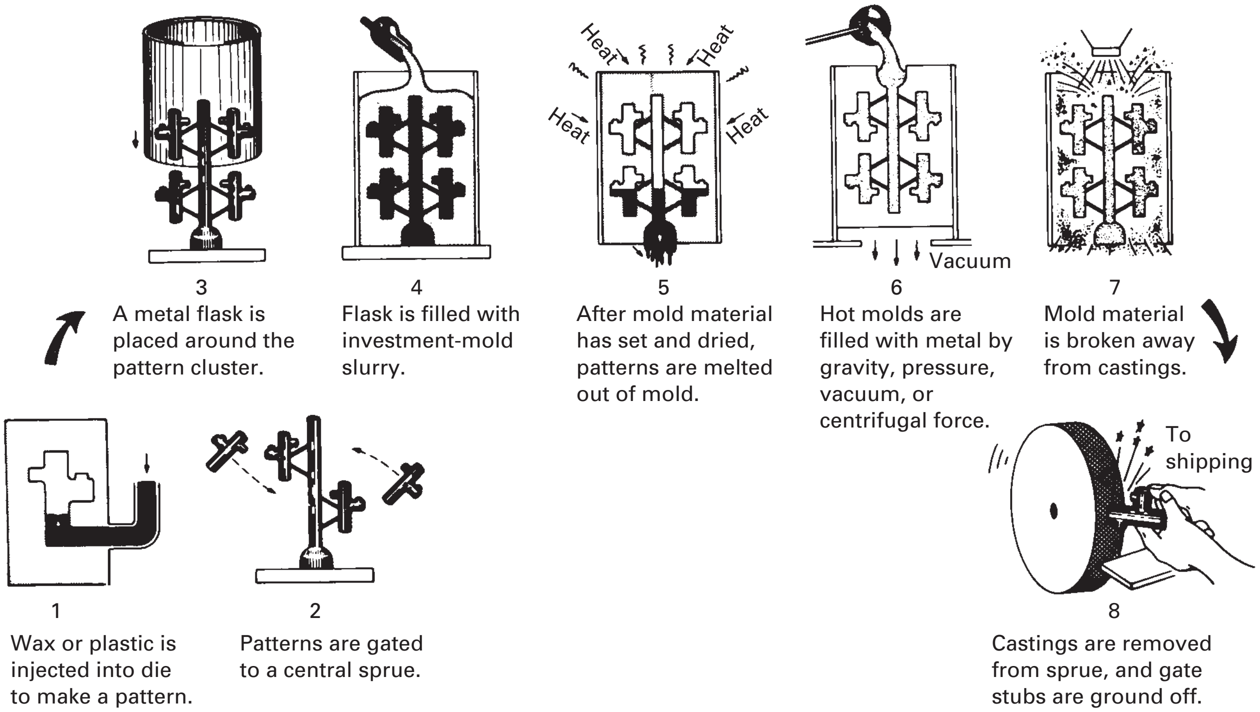

FIGURE 12-28 Investment-casting steps for the flask-cast method. *(Courtesy of Investment Casting Institute, Dallas, TX.)*

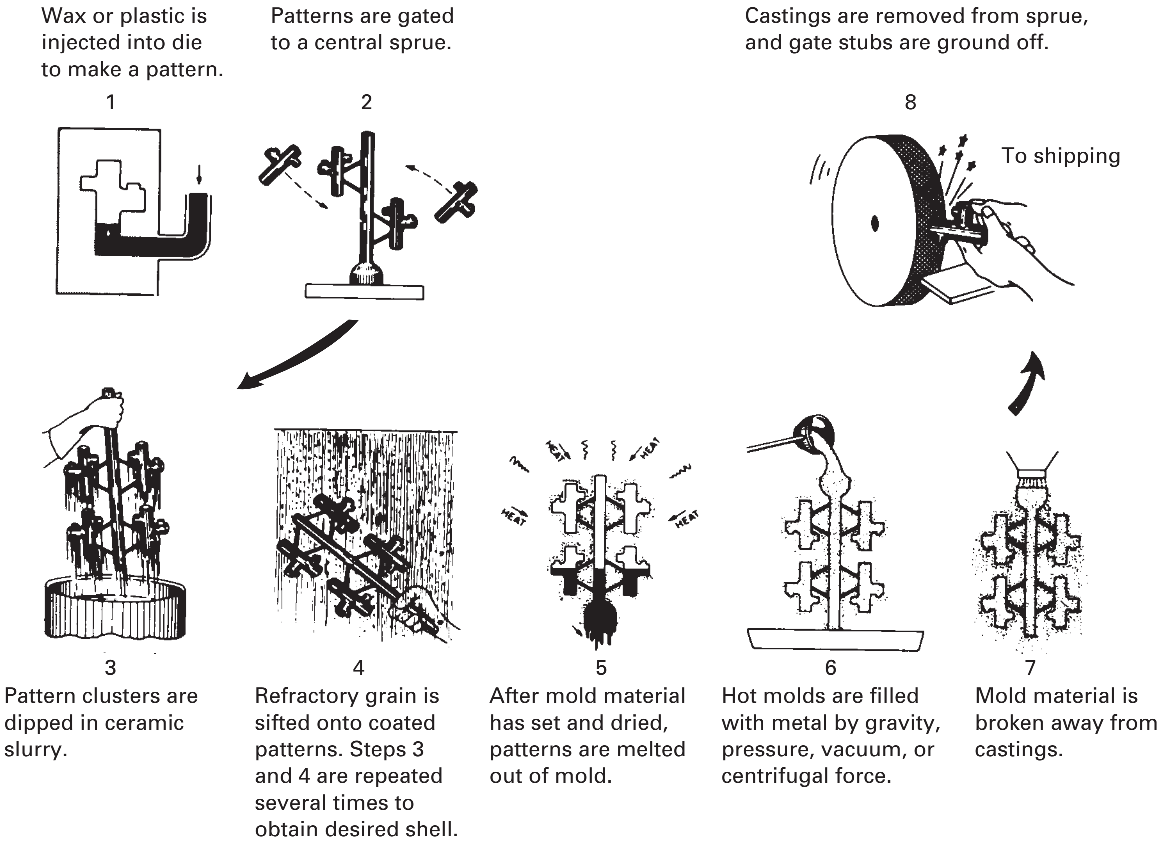

FIGURE 12-29 Investment-casting steps for the shell-casting procedure. *(Courtesy of Investment Casting Institute, Dallas, TX.)*

TABLE 12-6 Investment Casting

Process:	A refractory slurry is formed around a wax or plastic pattern and allowed to harden. The pattern is then melted out and the mold is baked. Molten metal is poured into the mold and solidifies. The mold is then broken away from the casting.
Advantages:	Excellent surface finish; high dimensional accuracy; almost unlimited intricacy; almost any metal can be cast; no flash or parting line concerns.
Limitations:	Costly patterns and molds; labor costs can be high; limited size.
Common metals:	Just about any castable metal. Aluminum, copper, and steel dominate; also performed with stainless steel, nickel, magnesium, and the precious metals.
Size limits:	As small as 3 g ($\frac{1}{10}$ oz) but usually less than 5 kg (10 lb).
Thickness limits:	As thin as 0.06 cm (0.025 in.), but less than 7.5 cm (3.0 in.).
Typical tolerances:	0.01 cm for the first 2.5 cm (0.005 in. for the first inch) and 0.002 cm for each additional cm (0.002 in. for each additional in.).
Draft allowances:	None required.
Surface finish:	1.3–4 microns (50 to 125 μin.) rms.

While most investment castings are less than 10 cm (4 in.) in size and weigh less than $\frac{1}{2}$ kg (1 lb), castings up to 1 m (36 in.) and 35 kg (80 lb) have been produced. Products ranging from stainless steel or titanium golf club heads to superalloy turbine blades have become quite routine. Figure 12-30 shows some typical investment castings. One should note that a high degree of shape complexity is a common characteristic of investment cast products.

The high cost of dies to make the wax patterns has traditionally limited investment casting to large production quantities. Recent advances in rapid prototyping, however, now enable the production of wax-like patterns directly from CAD data. The absence of part-specific tooling now enables the economical casting of one-of-a-kind or small-quantity products using the investment methods. The majority of investment castings now fall within the range of 100 to 10,000 pieces per year.

COUNTER-GRAVITY INVESTMENT CASTING

Counter-gravity investment casting turns the pouring process upside down. In one variation of the process, a ceramic shell mold is placed in an open-bottom chamber with the sprue end down. The open end of the sprue is lowered into a pool of molten metal, and the bottom of the chamber is set against a seal. A vacuum is then induced within the chamber. As the air is withdrawn, the vacuum draws metal up through the central sprue and into the mold. The castings are allowed to solidify, the vacuum is released, and any unsolidified metal flows back into the melt. In another variation, a low-pressure inert gas is used to push the molten metal upward into the mold. This approach is discussed in more detail and is also illustrated in the section on low-pressure permanent-mold casting in Chapter 13.

FIGURE 12-30 Typical parts produced by investment casting. *(Courtesy of Haynes International, Kokomo, IN.)*

The counter-gravity processes have a number of distinct advantages. Because the molten metal is withdrawn from below the surface of its ladle, it is generally free of slag and dross and has a very low level of inclusions. The vacuum or low-pressure filling allows the metal to flow with little turbulence, further enhancing metal quality. The reduction in metallic inclusions improves machinability and enables mechanical properties to approach or equal those of wrought material.

Since the gating system does not need to control turbulence, simpler gating systems can be used, reducing the amount of metal that does not become product. In the counter-gravity process, between 60% and 95% of the withdrawn metal becomes cast product, compared to a 15% to 50% level for gravity-poured castings. The pressure differential enables metal to flow into thinner sections, and lower "pouring" temperatures can be used, resulting in improved grain structure and better surface finish.

EVAPORATIVE PATTERN (FULL-MOLD AND LOST-FOAM) CASTING

Several limitations are common to most of the casting processes that have been presented. Some form of pattern is usually required, and this pattern may be costly to design and fabricate. Pattern costs may be hard to justify, especially when the number of identical castings is rather small or the part is extremely complex. In addition, reuseable patterns must be withdrawn from the mold, and this withdrawal often requires some form of design modification or compromise, division into multiple pieces, or special molding procedures. Investment casting overcomes the withdrawal limitations through the use of patterns that can be removed by melting and vaporization. Unfortunately, investment casting has its own set of limitations, including a large number of individual operations and the need to remove the investment material from the finished casting.

In the *evaporative pattern* processes, the pattern is made of *expanded polystyrene (EPS)*, or expanded polymethylmethacrylate (EPMMA), and remains in the mold. During the pour, the heat of the molten metal melts and burns the polystyrene, and the metal fills the space that was previously occupied by the pattern.

When small quantities are required, patterns can be cut by hand or machined from pieces of foamed polystyrene (a material similar to that used in Styrofoam drinking cups). This material is extremely light in weight and can be cut by a number of methods, including ones as simple as an electrically heated wire. Preformed material in the form of a pouring basin, sprue, runner segments, and risers can be attached with hot-melt glue to form a complete gating and pattern assembly. Small products can be assembled into clusters or trees, similar to investment casting.

When producing larger quantities of identical parts, a metal mold or die is generally used to mass-produce the evaporative patterns. Hard beads of polystyrene are first preexpanded and stabilized. The preexpanded beads are then injected into a heated metal die or mold, usually made from aluminum. A steam cycle causes them to further expand, fill the die, and fuse, after which they are cooled in the mold. The resulting pattern, a replica of the product to be cast, consists of about 2.5% polymer and 97.5% air. Pattern dies can be quite complex, and large quantities of patterns can be accurately and rapidly produced. When size or complexity is great, or geometry prevents easy removal, the pattern can be divided into multiple segments, or slices, which are then assembled by hot-melt gluing. The ideal glue should be strong, fast setting, and produce a minimum amount of gas when it decomposes or combusts.

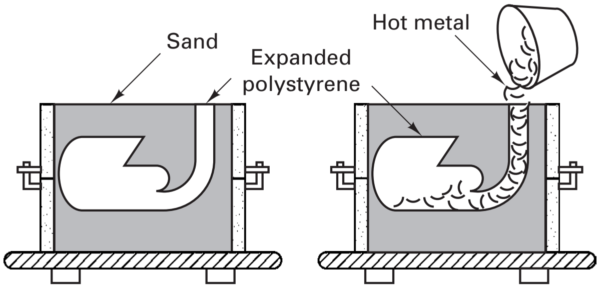

FIGURE 12-31 Schematic of the full-mold process. (Left) An uncoated expanded polystyrene pattern is surrounded by bonded sand to produce a mold. (Right) Hot metal progressively vaporizes the expanded polystyrene pattern and fills the resulting cavity.

After a polystyrene gating system is attached to the polystyrene pattern, there are several options for the completion of the mold. In the *full-mold process*, shown schematically in Figure 12-31, green sand or some type of chemically bonded (no-bake) sand is compacted around the pattern and gating system, taking care not to crush or distort it. The mold is then poured like a conventional sand-mold casting.

In the *lost-foam* process, depicted schematically in Figure 12-32, the polystyrene assembly is first dipped into a water-based ceramic that wets both external and internal surfaces and forms a thin refractory coating. The coating must be thin enough and sufficiently

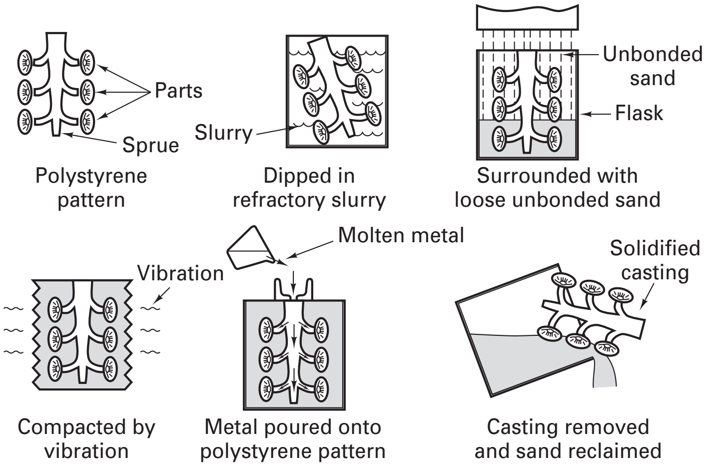

FIGURE 12-32 Schematic of the lost-foam casting process. In this process, the polystyrene pattern is dipped in a ceramic slurry, and the coated pattern is then surrounded with loose, unbonded sand.

permeable to permit the escape of the molten and gaseous pattern material, but rigid enough to prevent mold collapse during pouring. After the coating dries, the pattern assembly is suspended in a one-piece flask and surrounded by fine unbonded sand. Vibration ensures that the sand compacts around the pattern and fills all cavities and passages. During the pour, molten metal melts, vaporizes, and replaces the expanded polystyrene, while the coating isolates the metal from the loose, unbonded sand. After the casting has cooled and solidified, the loose sand is then dumped from the flask, freeing the casting and attached gating system. The backup sand can then be reused, provided the coating residue is removed and the organic condensates are periodically burned off. Figure 12-33 shows the series of operations used in producing a rather complex lost-foam casting.

The full-mold and lost-foam processes can produce castings of any size in both ferrous and nonferrous metals. Since the pattern need not be withdrawn, no draft is required in the design. Complex patterns can be produced to make shapes that would ordinarily require multiple cores, loose-piece patterns, or extensive finish machining. Multicomponent assemblies can often be replaced by a single casting. Because of the high precision and smooth surface finish, machining and finishing operations can often be reduced or totally eliminated. Fragile or complex-geometry cores are no longer required, and the absence of parting lines eliminates the need to remove associated lines or fins on the metal casting.

As the molten metal progresses through the pattern, it loses heat due to the melting and volatilizing of the foam. As a result, the material farthest from the gate is the coolest,

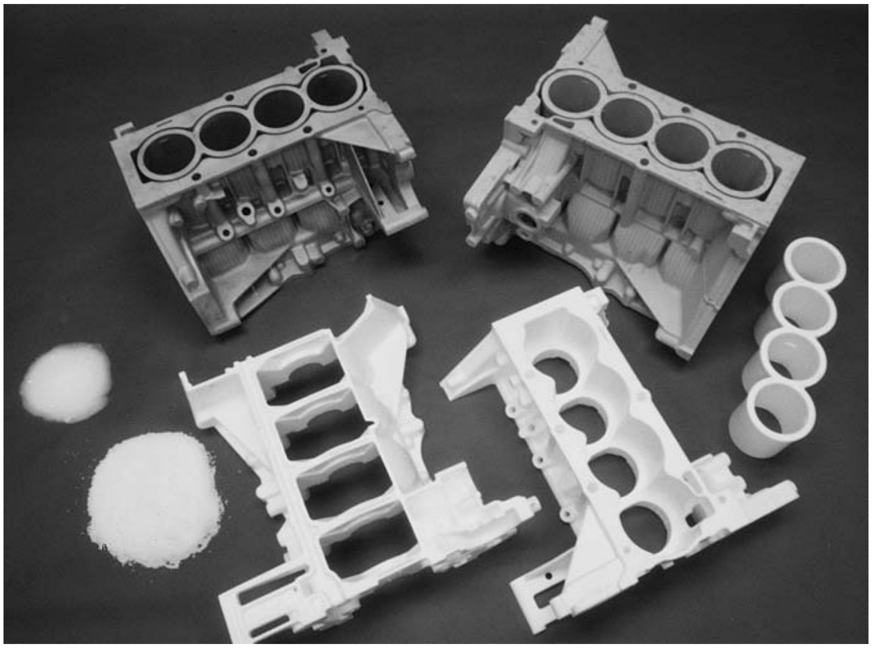

FIGURE 12-33 The stages of lost-foam casting, proceeding counterclockwise from the lower left: polystyrene beads → expanded polystyrene pellets → three foam pattern segments → an assembled and dipped polystyrene pattern → a finished metal casting that is a metal duplicate of the polystyrene pattern. *(Courtesy of Saturn Corporation, Spring Hill, TN.)*

TABLE 12-7 Lost-Foam Casting

Process: A pattern containing a sprue, runners, and risers is made from single or multiple pieces of foamed plastic, such as polystyrene. It is dipped in a ceramic material, dried, and positioned in a flask, where it is surrounded by loose sand. Molten metal is poured directly onto the pattern, which vaporizes and is vented through the sand.

Advantages: Almost no limits on shape and size; most metals can be cast; no draft is required and no flash is present (no parting lines).

Limitations: Pattern cost can be high for small quantities; patterns are easily damaged or distorted because of their low strength.

Common metals: Aluminum, iron, steel, and nickel alloys; also performed with copper and stainless steel.

Size limits: 0.5 kg to several thousand kg (1 lb to several tons).

Thickness limits: As small as 2.5 mm (0.1 in.) with no upper limit.

Typical tolerances: 0.003 cm/cm (0.003 in./in.) or less.

Draft allowance: None required.

Surface finish: 2.5–25 microns (100–1000 μin.) rms.

---

and solidification tends to proceed in a directional manner back toward the gate. For many castings, risers are not required. Metal yield (product weight versus the weight of poured metal) tends to be rather high. For these and other reasons, evaporative-pattern casting has grown rapidly in popularity and use. Table 12-7 summarizes the process and its capabilities.

12.6 SHAKEOUT, CLEANING, AND FINISHING

In each of the casting processes presented in this chapter, the final step involves separating the castings from the molds and mold material. *Shakeout* operations are designed to separate the molds and sand from the flasks (i.e., containers), separate the castings from the molding sand, and separate or remove the cores from the castings. Punchout machines can be used to force the entire contents of a flask (both molding sand and casting) from the container. Vibratory machines, which can operate on either the entire flasks or the extracted contents, are available in a range of styles, sizes, and vibratory frequencies. Rotary separators remove the sand from castings by placing the mold contents inside a slow-turning, large-diameter, rotating drum. The tumbling action breaks the gates and runners from the castings, crushes lumps of sand, and extracts the cores. Because of possible damage to lightweight or thin-sectioned castings, rotary tumbling is usually restricted to cast iron, steel, and brass castings of reasonable thickness.

Processes such as blast cleaning can be used to remove adhering sand, oxide scale, and parting-line burrs. Compressed air or centrifugal force is used to propel abrasive particles against the surfaces of the casting. The propelled media can be metal shot (usually iron or steel), fine aluminum oxide, glass beads, or naturally occurring quartz or silica. The blasting action may be combined with some form of tumbling or robotic manipulation to expose the various surfaces. Additional finishing operations may include grinding, trimming, or various forms of machining.

12.7 SUMMARY

Liquids have the characteristic property that they assume the shape of their container. A number of processes have been developed to create shaped containers and then utilize liquid fluidity and subsequent solidification to produce desired shapes. Each process has its unique set of capabilities, advantages, and limitations, and the selection of the best method for a given application requires an understanding of all possible options. This chapter has presented processes that produce castings with a single-use (expendable) mold. The following chapter will supplement this knowledge with a survey of multiple-use mold processes.

Key Words

air-set sand
automatic match-plate molding
blows
ceramic mold
chaplets
cheek
cohesiveness
cold-box process
collapsibility
compactibility
compressive strength
cope-and-drag-pattern
core
core-oil process
core prints

counter-gravity investment casting
dump-core box
dry-sand mold
Eff-set process
evaporative-pattern casting
expanded polystyrene
expendable mold
flask
follow board
full-mold casting
gates
graphite mold
green compressive strength
green sand
green-sand cores
H-process
hand ramming
hardness
hot-box method
hot tears
investment casting
jolting
loose-piece pattern
lost-foam casting
lost-wax process
match plate
mold hardness
muller
no-bake sand
one-piece pattern
pattern
penetration
permeability
plaster mold
refractoriness
rubber-mold casting
runner
sand expansion defects
sand slinger
shakeout
Shaw process
shell molding
silica sand
single-piece cores
skin-dried mold
sodium silicate–CO_2 molding
split pattern
sprue
squeezing
stack molding
standard rammed specimen
V-process
vacuum molding
vertically parted flaskless molding
water glass

■ Review Questions

1. What are some of the factors that influence the selection of a specific casting process as a means of making a product?
2. What are the three basic categories of casting processes when classified by molds and patterns?
3. What metals are frequently cast into products?
4. Which type of casting is the most common and most versatile?
5. What is a casting pattern?
6. What are some of the materials used in making casting patterns? What features should be considered when selecting a pattern material?
7. What is the simplest and least expensive type of casting pattern?
8. What is a match plate, and how does it aid molding?
9. How is a cope-and-drag pattern different from a match-plate pattern? When might this be attractive?
10. For what types of products might a loose-piece pattern be required?
11. What are the four primary requirements of a molding sand?
12. In what ways might a molding sand be a compromise material?
13. What is a muller, and what function does it perform?
14. What are some of the properties or characteristics of foundry sands that can be evaluated by standard tests?
15. What is a standard rammed specimen for evaluating foundry sands, and how is it produced?
16. What is permeability, and why is it important in molding sands?
17. How does the ratio of water to clay affect the compressive strength of green sand?
18. How does the size and shape of the sand grains relate to molding sand properties?
19. What is a sand expansion defect, and what is its cause?
20. How can sand expansion defects be minimized?
21. What causes a "blow" to form in a casting, and what can be done to minimize their occurrence?
22. What features can cause the penetration of molten metal between the grains of the molding sand?
23. What are hot tears, and what can cause them to form?
24. Describe the distribution of sand density after compaction by jolting, squeezing, and a jolt–squeeze combination.
25. How can the use of vertically parted flaskless molding reduce the number of mold sections required to produce a series of castings?
26. What is stack molding?
27. How might extremely large molds be made?
28. What is green sand?
29. What are some of the limitations or problems associated with green sand as a mold material?
30. What restricts the use of dry sand molding?
31. What are some of the advantages and limitations of the sodium silicate–CO_2 process?
32. What is the primary feature of no-bake sands?
33. What material serves as the binder in the shell-molding process, and how is it cured?
34. Why do shell molds have excellent permeability and collapsibility?
35. What is the sand binder in the V-process? The Eff-set process?
36. What types of geometric features might require the use of cores?
37. What is the primary limitation of green-sand cores?
38. What is the sand binder in the core-oil process, and how is it cured?
39. What is the binder in the hot-box core-making process?
40. What is the primary attraction of the cold-box core-making process? The primary negative feature?
41. What is an attractive feature of shell-molded cores?
42. Why is it common for greater permeability, collapsibility, and refractoriness to be required of cores than for the base molding sand?
43. What is the role of chaplets, and why is it important that they not completely melt during the pouring and solidification of a casting?
44. Why are plaster molds suitable only for the lower-melting-temperature nonferrous metals and alloys?
45. What is the primary performance difference between plaster and ceramic molds?
46. For what materials might a graphite mold be required?
47. What materials are used to produce the expendable patterns for investment casting?
48. Describe the progressive construction of an investment-casting mold.
49. Why are investment-casting molds generally preheated prior to pouring?
50. Why are investment castings sometimes called "lost-wax" castings?
51. What are some of the attractive features of investment casting?
52. What are some of the advantages of counter-gravity investment casting over the conventional gravity pour approach?

53. What are some of the benefits of not having to remove the pattern from the mold (as in investment casting, full-mold casting, and lost-foam casting)?
54. Since both use expanded polystyrene as a pattern, what is the primary difference between full-mold and lost-foam casting?
55. What are some of the attractive features of the evaporative-pattern processes?
56. What are some of the objectives of a shakeout operation?
57. How might castings be cleaned after shakeout?

■ Problems

1. While cores increase the cost of castings, they also provide a number of distinct advantages. The most significant is the ability to produce complex internal passages. They can also enable the production of difficult external features, such as undercuts, or allow the production of zero-draft walls. Cores can reduce or eliminate additional machining, reduce the weight of a casting, and reduce or eliminate the need for multipiece assembly. Answer the following questions about cores.
   a. The cores themselves must be produced, and generally they have to be removed from core boxes or molds. What geometric limitations might this impose? How might these limitations be overcome?
   b. Cores must be positioned and supported within a mold. Discuss some of the limitations associated with core positioning and orientation. Consider the weight of a core, prevention of core fracture, minimization of core deflection, and possible buoyancy.
   c. Since cores are internal to the casting, adequate venting is necessary to eliminate or minimize porosity problems. Discuss possible features to aid in venting.
   d. How might core behavior vary with different materials being cast—steel versus aluminum, for example?
   e. Core removal is another design concern. Discuss how several different core-making processes might perform in the area of removal. What are some ways to assist or facilitate core removal?

www.wiley.com/college/degarmo

Chapter 12 CASE STUDY

Movable and Fixed Jaw Pieces for a Heavy-Duty Bench Vise

The figure presents a cutaway sketch of the movable and fixed jaw pieces of a heavy-duty vise that might see use in vocational schools, factories, and machine shops. The vise is intended to have a rated maximum clamping force of 15 tons. The slide of the moving jaw has been designed to be a 2-in. box channel. The jaw width is 5 in., the maximum jaw opening is 6 in., and the depth of the throat is 4 in. The designer has elected to use replaceable, serrated jaws and suggests that the material used for the receiving jaw pieces have a yield strength in excess of 35 ksi, with at least 15% elongation in a uniaxial tensile test (to ensure that an overload or hammer impact would not produce brittle fracture).

1. Determine some possible combinations of material and process that could fabricate the desired shapes with the required properties. Of the alternatives presented, which would you prefer and why?
2. Would the components require some form of subsequent heat treatment? Consider the possibilities of stress relief, homogenization, or the establishment of desired final properties. What would you recommend?
3. One of your colleagues has suggested that the slides be finished with a coat of paint. Do you think a surface treatment is necessary or desirable for your selected material and process? If so, what would you recommend? If not, defend your recommendation.

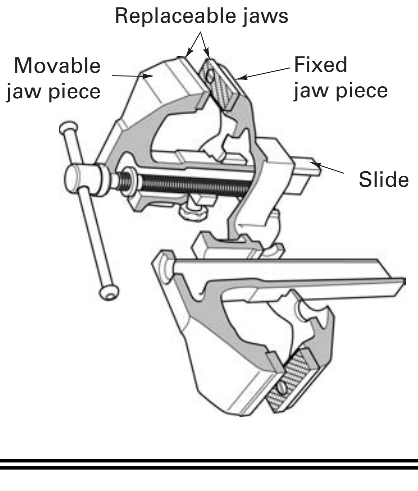

Note: shaded surfaces have been produced by cross-sectional cuts

CHAPTER 13

MULTIPLE-USE-MOLD CASTING PROCESSES

13.1 INTRODUCTION

In each of the expendable-mold casting processes discussed in Chapter 12, a separate mold had to be created for each pour. Variations in mold consistency, mold strength, moisture content, pattern removal, and other factors contribute to dimensional and property variation from casting to casting. In addition, the need to create and then destroy a separate mold for each pour results in rather low production rates.

The multiple-use-mold casting processes overcome many of these limitations, but they, in turn, have their own assets and liabilities. Since the molds are generally made from metal, many of the processes are restricted to casting the lower-melting-point nonferrous metals and alloys. Part size is often limited, and the dies or molds can be rather costly.

13.2 PERMANENT-MOLD CASTING

In the *permanent-mold casting* process, also called gravity die casting, a reusable mold is machined from gray cast iron, alloy cast iron, steel, bronze, graphite, or other material. The molds are usually made in segments, which are often hinged to permit rapid and accurate opening and closing. After preheating, a refractory or mold coating is applied to the preheated mold, and the mold is clamped shut. Molten metal is then poured into the pouring basin, and it flows through the feeding system into the mold cavity by simple gravity flow. After solidification, the mold is opened and the product is removed. Since the heat from the previous cast is usually sufficient to maintain mold temperature, the process can be immediately repeated, with a single refractory coating serving for several pouring cycles. Aluminum-, magnesium-, zinc-, lead-, and copper-based alloys are the metals most frequently cast, along with gray cast iron. If graphite is used as the mold material, iron and steel castings can also be produced.

Numerous advantages can be cited for the permanent-mold process. Near-net shapes can be produced that require little finish machining. The mold is reusable, and a good surface finish is obtained if the mold is in good condition. Dimensions are consistent from part to part, and dimensional accuracy can often be held to within 0.25 mm (0.010 in.). Directional solidification can be achieved through good design or can be promoted by selectively heating or chilling various portions of the mold or by varying the thickness of the mold wall. The result is usually a sound, defect-free casting with good mechanical properties. The faster cooling rates of the metal mold produce a finer grain structure, reduced porosity, and higher-strength products than would result from a sand casting process. Cores, both expendable sand or plaster or retractable metal, can be used to increase the complexity of the casting, and multiple cavities can often be included in a single mold. When sand cores are used, the process is often called *semipermanent mold casting*.

On the negative side, the process is generally limited to the lower-melting-point alloys, and high mold costs can make low production runs prohibitively expensive. The useful life of a mold is generally set by molten metal erosion or thermal fatigue. When making products of steel or cast iron, mold life can be extremely short. For the lower-temperature metals, one can usually expect somewhere between 10,000 and 120,000 cycles. The actual mold life will depend upon the following:

1. *Alloy being cast*. The higher the melting point, the shorter the mold life.
2. *Mold material*. Gray cast iron has about the best resistance to thermal fatigue and machines easily. Thus it is used most frequently for permanent molds.
3. *Pouring temperature*. Higher pouring temperatures reduce mold life, increase shrinkage problems, and induce longer cycle times.
4. *Mold temperature*. If the temperature is too low, one can expect misruns and large temperature differences in the mold. If the temperature is too high, excessive cycle times result and mold erosion is aggravated.
5. *Mold configuration*. Differences in section sizes of either the mold or the casting can produce temperature differences within the mold and reduce its life.

The permanent molds contain the mold cavity, pouring basin, sprue, runners, risers, gates, possible core supports, alignment pins, and some form of ejection system. The molds are usually heated at the beginning of a run, and continuous operation then maintains the mold at a fairly uniform elevated temperature. This minimizes the degree of thermal fatigue, facilitates metal flow, and controls the cooling rate of the metal being cast. Since the mold temperature rises when a casting is produced, it may be necessary to provide a mold-cooling delay before the cycle is repeated. Refractory washes or graphite coatings can be applied to the mold walls to control or direct the cooling, prevent the casting from sticking, and prolong the mold life by minimizing thermal shock and fatigue. When pouring cast iron, an acetylene torch is often used to apply a coating of carbon black to the mold.

Since the molds are not permeable, special provision must be made for *venting*. This is usually accomplished through the slight cracks between mold halves or by very small vent holes that permit the escape of trapped air but not the passage of molten metal. Since gravity is the only means of inducing metal flow, risers must still be employed to compensate for solidification shrinkage, and with the necessary sprues and runners, yields are generally less than 60%.

Mold complexity is often restricted because the rigid cavity offers no collapsibility to compensate for the solid-state shrinkage of the casting. As a best alternative, it is common practice to open the mold and remove the casting immediately after solidification. This prevents the formation of hot tears that may form if the product is restrained during the shrinkage that occurs during cooldown to room temperature.

For permanent-mold casting, high-volume production is usually required to justify the high cost of the metal molds. Automated machines can be used to coat the mold, pour the metal, and remove the casting. Figure 13-1 shows a variety of automobile and truck pistons that were manufactured by the permanent-mold process, which is summarized in Table 13-1.

SLUSH CASTING

Hollow castings can be produced by a variant of permanent-mold casting known as *slush casting*. Hot metal is poured into the metal mold and is allowed to cool until a shell of desired thickness has formed. The mold is then inverted and the remaining liquid is poured out. The resulting casting is a hollow shape with good surface detail but variable wall thickness. Common applications include the casting of ornamental objects such as candlesticks, lamp bases, and statuary from the low-melting-temperature metals.

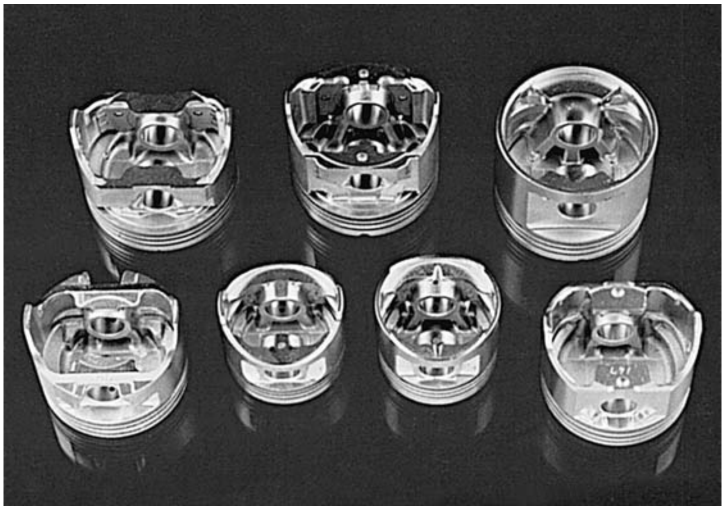

FIGURE 13-1 Truck and car pistons are mass-produced by the millions using permanent-mold casting. *(Courtesy of General Motors Corporation, Detroit, MI.)*

TABLE 13-1 Permanent-Mold Casting

Process: Mold cavities are machined into mating metal die blocks, which are then preheated and clamped together. Molten metal is then poured into the mold and enters the cavity by gravity flow. After solidification, the mold is opened and the casting is removed.

Advantages: Good surface finish and dimensional accuracy; metal mold gives rapid cooling and fine-grain structure; multiple-use molds (up to 120,000 uses); metal cores or collapsible sand cores can be used.

Limitations: High initial mold cost; shape, size, and complexity are limited; yield rate rarely exceeds 60%, but runners and risers can be directly recycled; mold life is very limited with high-melting-point metals such as steel.

Common metals: Alloys of aluminum, magnesium, and copper are most frequently cast; irons and steels can be cast into graphite molds; alloys of lead, tin, and zinc are also cast.

Size limits: 100 grams to 75 kilograms (several ounces to 150 pounds).

Thickness limits: Minimum depends on material but generally greater than 3 mm ($\frac{1}{8}$ in.); maximum thickness about 50 mm (2.0 in.).

Geometric limits: The need to extract the part from a rigid mold may limit certain geometric features. Uniform section thickness is desirable.

Typical tolerances: 0.4. mm for the first 2.5. cm (0.015 in. for the first inch) and 0.02 mm for each additional centimeter (0.002 in. for each additional inch); 0.25mm (0.01 in.) added if the dimension crosses a parting line.

Draft allowance: 2°–3°.

Surface finish: 2.5 to 7.5 μm (100–250 μin.) rms.

LOW-PRESSURE AND VACUUM PERMANENT-MOLD CASTING

Gravity pouring is the oldest, simplest, and most traditional form of permanent-mold casting. In a variation known as *tilt-pour permanent-mold casting*, the molten metal is placed in the pouring basin and the mold then rotates to induce flow into the mold cavity. In this way, turbulence is minimized as the metal flows through the gating system and into the mold.

In low-pressure and vacuum permanent-mold casting, the mold is turned upside down and positioned above a sealed, airtight chamber that contains a crucible of molten metal. A small pressure difference then causes the molten metal to flow upward into the die cavity. In the *low-pressure permanent-mold* (LPPM) process, illustrated in Figure 13-2, a low-pressure gas (3 to 15 psi) is introduced into a sealed chamber, driving molten metal up through a refractory fill tube and into the gating system or cavity of a metal mold. This metal is exceptionally clean, since it flows from the center of the melt and is fed directly into the mold (a distance of about 10 cm, or 3 to 4 in.), never passing through the atmosphere. Product quality is further enhanced by the nonturbulent mold filling, which helps to minimize gas porosity and dross formation.

Through design and cooling, the products directionally solidify from the top down. The molten metal in the pressurized fill tube acts as a riser to continually feed the casting

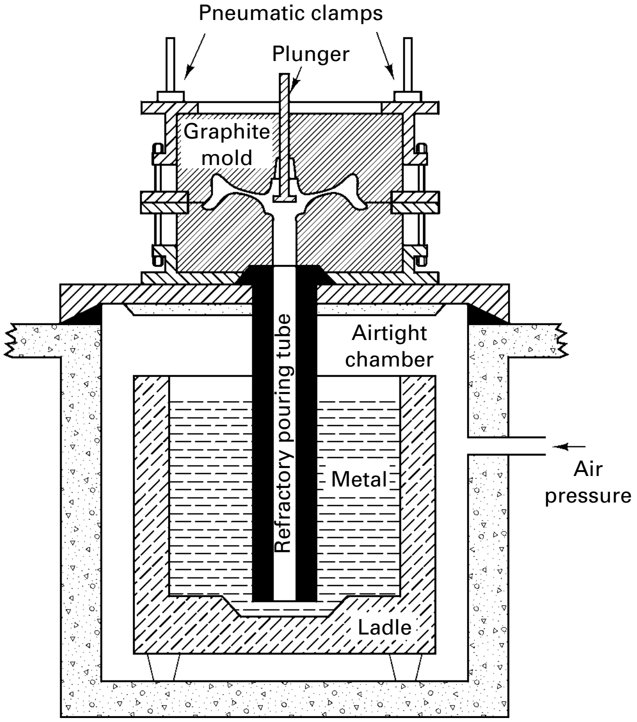

FIGURE 13-2 Schematic of the low-pressure permanent-mold process. *(Courtesy of Amsted Industries, Chicago, IL.)*

during solidification. When solidification is complete, the pressure is released and the unused metal in the feed tube simply drops back into the crucible. The reuse of this metal, coupled with the absence of additional risers, leads to yields that are often greater than 85%.

Nearly all low-pressure permanent-mold castings are made from aluminum or magnesium, but some copper-based alloys can also be used. Mechanical properties are typically about 5% better than those of conventional permanent-mold castings. Cycle times are somewhat longer, however, than those of conventional permanent molding.

Figure 13-3 depicts a similar variation of permanent-mold casting, where a vacuum is drawn on the die assembly and atmospheric pressure in the chamber forces the metal upward. All of the benefits and features of the low-pressure process are retained, including the subsurface extraction of molten metal from the melt, the bottom feed to the mold, the minimal metal disturbance during pouring, the self-risering action, and the downward directional solidification. Thin-walled castings can be produced with high metal yield and excellent surface quality. Because of the vacuum, the cleanliness of the metal and the dissolved gas content are superior to that of the low-pressure process. Final castings typically range from 0.2 to 5 kg (0.4 to 10 lb) and have mechanical properties that are even better than those of the low-pressure permanent-mold products.

13.3 DIE CASTING

In the *die-casting* process, or more specifically pressure die casting, molten metal is forced into metal molds under pressures of several thousand pounds per square inch (tens of MPa) and held under high pressure during solidification. Because of the combination of metal molds or dies and high pressure, fine sections and excellent detail can be achieved, together with long mold life. Most die castings are made from nonferrous metals and alloys, with special zinc-, copper-, magnesium-, and aluminum-based alloys having been designed to produce excellent properties when die cast. Ferrous-metal die castings are possible but are generally considered to be uncommon. Production rates are high, the products exhibit good strength, shapes can be quite intricate, and dimensional precision and surface qualities are excellent. There is almost a complete elimination of subsequent machining. Most die castings can be classified as small- to medium-sized parts, but the size and weight of die castings are continually increasing. Parts can now be made with weights up to 10 kg (20 lb) and dimensions as large as 600 mm (24 in.).

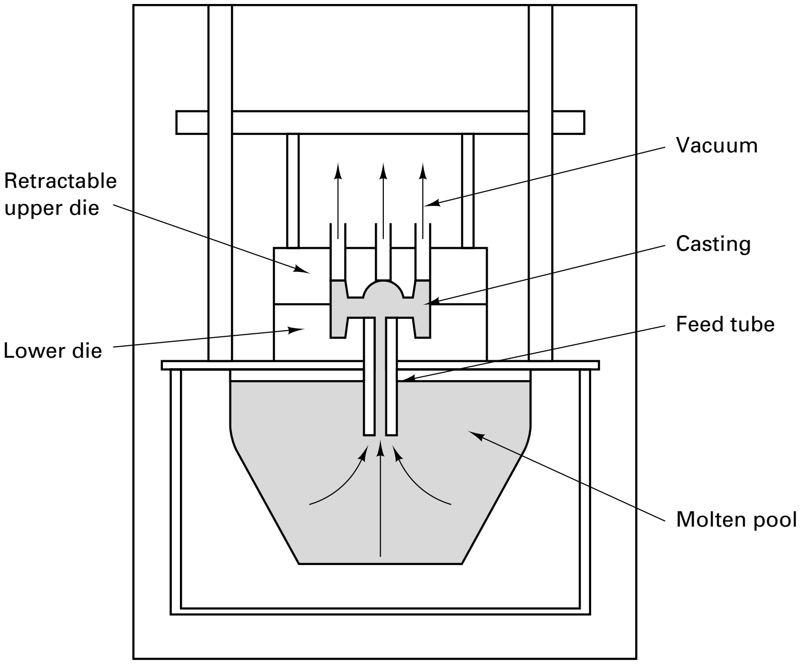

FIGURE 13-3 Schematic illustration of vacuum permanent-mold casting. Note the similarities to the low-pressure process.

Die temperatures are usually maintained at about 150° to 250°C (300° to 500°F) below the solidus temperature of the metal being cast in order to promote rapid freezing. Since cast iron cannot withstand the high casting pressures, die-casting dies are usually made from hardened hot-work tool steels and are typically quite expensive. As shown in Figure 13-4, the dies may be relatively simple, containing only one or two mold cavities, or they may be complex, containing multiple cavities of the same or different products, or even be an assembly of multiple subcomponents. The rigid dies must separate into at least two pieces to permit removal of the casting. It is not uncommon, however, for complex die castings to require multiple-segment dies that open and close in several different directions. Die complexity is further increased as the various sections incorporate water-cooling passages, *retractable cores*, and moving pins to knock out or eject the finished casting.

Die life is usually limited by wear (or erosion), which is strongly dependent on the temperature of the molten metal. Surface cracking can also occur in response to the large number of heating and cooling cycles that are experienced by the die surfaces. If the rate of temperature change is the dominant feature, the problem is called *heat checking*. If the number of cycles is the primary cause, the problem is called *thermal fatigue*.

In the basic die-casting process, water-cooled dies are first lubricated and clamped tightly together. Molten metal is then injected under high pressure. Since high injection pressures cause turbulence and air entrapment, the specified values of pressure

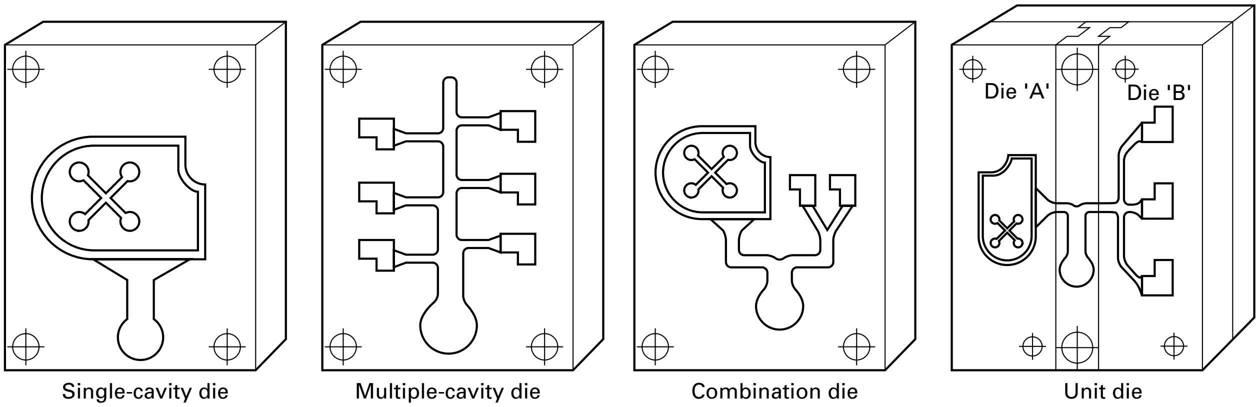

Single-cavity die　Multiple-cavity die　Combination die　Unit die

FIGURE 13-4 Various types of die-casting dies. *(Courtesy of American Die Casting Institute, Inc., Des Plaines, IL.)*

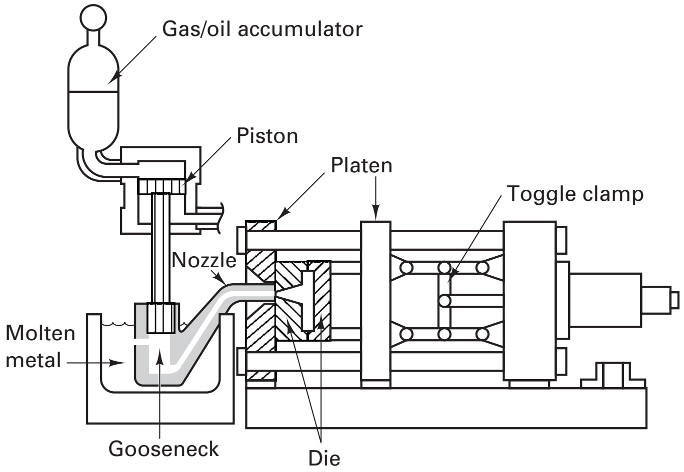

FIGURE 13-5 Principal components of a hot-chamber die-casting machine. *(Adapted from* Metals Handbook, *9th ed., Vol 15, p. 287, ASM International, Metals Park, OH.)*

and the time and duration of application vary considerably. The pressure need not be constant, and there has been a trend toward the use of larger gates and lower injection pressures, followed by the application of higher pressure after the mold has completely filled and the metal has started to solidify. By reducing turbulence and solidifying under high pressure, this cycle reduces both the porosity and inclusion content of the finished casting. After solidification is complete, the pressure is released, the dies separate, and ejector pins extract the finished casting along with its attached runners and sprues.

There are two basic types of die-casting machines. Figure 13-5 schematically illustrates the *hot-chamber*, or *gooseneck*, variety. A gooseneck chamber is partially submerged in a reservoir of molten metal. With the plunger raised, molten metal flows through an open port and fills the chamber. A mechanical plunger then forces the metal up through the gooseneck, through the runners and gates, and into the die, where it rapidly solidifies. Retraction of the plunger then allows the gooseneck to refill as the casting is being ejected, and the cycle repeats at speeds up to 100 shots per minute.

Hot-chamber die-casting machines offer fast cycling times (set by the ability of the water-cooled dies to cool and solidify the metal) and the added advantage that the molten metal is injected from the same chamber in which it is melted (i.e., there is no handling or transfer of molten metal). Unfortunately, the hot-chamber design cannot be used for the higher-melting-point metals, and it is unattractive for aluminum since the molten aluminum tends to pick up some iron during the extended time of contact with the casting equipment. Hot-chamber machines, therefore, see primary use with zinc-, tin-, and lead-based alloys.

Zinc die castings can also be made by a process known as *heated-manifold direct-injection die casting* (also known as direct-injection die casting or runnerless die casting). The molten zinc is forced through a heated manifold and then through heated mini-nozzles directly into the die cavity. This approach totally eliminates the need for sprues, gates, and runners. Scrap is reduced, energy is conserved (less molten metal per shot and no need to provide excess heat to compensate for cooling in the gating system), and product quality is increased. Existing die-casting machines can be converted through the addition of a heated manifold and modification of the various dies.

Cold-chamber machines are usually employed for the die casting of materials that are not suitable for the hot-chamber design. These include alloys of aluminum, magnesium, and copper as well as high-aluminum zinc. As illustrated in Figure 13-6, metal that has been melted in a separate furnace is transported to the die-casting machine, where a measured quantity is fed into an unheated shot chamber (or injection cylinder) and subsequently driven into the die by a hydraulic or mechanical plunger. The pressure is then maintained or increased until solidification is complete. Since molten metal must be transferred to the chamber for each shot, the cold-chamber process has a longer operating cycle compared to hot-chamber machines. Nevertheless, productivity is still high.

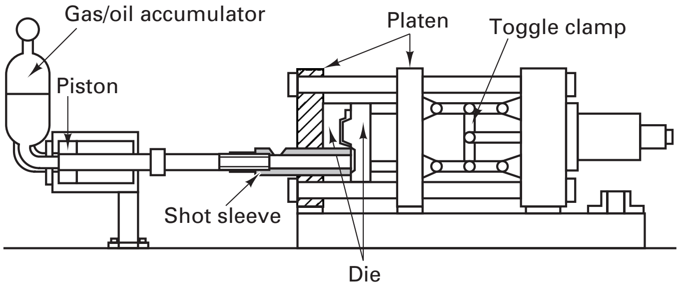

FIGURE 13-6 Principal components of a cold-chamber die-casting machine. *(Adapted from* Metals Handbook, *9th ed., Vol 15, p. 287, ASM International, Metals Park, OH.)*

In all variations of the process, die-casting dies fill with metal so fast that there is little time for the air in the runner system and mold cavity to escape, and the metal molds offer no permeability. The air can become trapped and cause a variety of defects, including blowholes, porosity, and misruns. To minimize these defects, it is crucial that the dies be properly vented, usually by wide, thin (0.13-mm or 0.005-in.) vents positioned along the parting line. Proper positioning is a must, since all of the air must escape before the molten metal contacts the vents. The long thin slots allow the escape of gas but promote rapid freezing of the metal and a plugging of the hole. The metal that solidifies in the vents must be trimmed off after the casting has been ejected. This can be done with special trimming dies that also serve to remove the sprues and runners.

Risers are not used in the die-casting process since the high injection pressures ensure the continuous feed of molten metal from the gating system into the casting. The porosity that is often found in die castings is not shrinkage porosity; it is more likely to be the result of either entrapped air or the turbulent mode of die filling. This porosity tends to be confined to the interior of castings, and its formation can often be minimized by smooth metal flow, good venting, and proper application of pressure. The rapidly solidified surface is usually harder and stronger than the slower-cooled interior and is usually sound and suitable for plating or decorative applications.

Sand cores cannot be used in die casting because the high pressures and flow rates cause the cores to either disintegrate or have excessive metal penetration. As a result, metal cores are required, and provisions must be made for their retraction, usually before the die is opened for removal of the casting. As with all mating segments and moving components, a close fit must be maintained to prevent the pressurized metal from flowing into the gap. Loose core pieces (also metal) can also be positioned into the die at the beginning of each cycle and then removed from the casting after its ejection. This procedure permits more complex shapes to be cast, such as holes with internal threads, but production rate is slowed and costs increase.

Cast-in *inserts* can also be incorporated in the die-casting process. Examples include prethreaded bosses, electrical heating elements, threaded studs, and high-strength bearing surfaces. These high-temperature components are positioned in the die before the lower-melting-temperature metal is injected. Suitable recesses must be provided in the die for positioning and support, and the casting cycle tends to be slowed by the additional operations.

Table 13-2 summarizes the key features of the die-casting process. Attractive aspects include smooth surfaces and excellent dimensional accuracy. For aluminum-, magnesium-, zinc-, and copper-based alloys, linear tolerances of 3 mm/m (0.003 in./in.) are not uncommon. Thinner sections can be cast than with either sand or permanent-mold casting. The minimum section thickness and draft vary with the type of metal, with typical values as follows:

Metal	Minimum Section	Minimum Draft
Aluminum alloys	0.89 mm (0.035 in.)	1:100 (0.010 in./in.)
Brass and bronze	1.27 mm (0.050 in.)	1:80 (0.015 in./in.)
Magnesium alloys	1.27 mm (0.050 in.)	1:100 (0.010 in./in.)
Zinc alloys	0.63 mm (0.025 in.)	1:200 (0.005 in./in.)

TABLE 13-2 Die Casting

Process: Molten metal is injected into closed metal dies under pressures ranging from 10 to 175 MPa (1500–25,000 psi). Pressure is maintained during solidification, after which the dies separate and the casting is ejected along with its attached sprues and runners. Cores must be simple and retractable and take the form of moving metal segments.

Advantages: Extremely smooth surfaces and excellent dimensional accuracy; rapid production rate; product tensile strengths as high as 415 Mpa (60 ksi).

Limitations: High initial die cost; limited to high-fluidity nonferrous metals; part size is limited; porosity may be a problem; some scrap in sprues, runners, and flash, but this can be directly recycled.

Common metals: Alloys of aluminum, zinc, magnesium, and lead; also possible with alloys of copper and tin.

Size limits: Less than 30 grams (1 oz) up through about 7 kg (15 lb) most common.

Thickness limits: As thin as 0.75 mm (0.03 in.), but generally less than 13 mm ($\frac{1}{2}$ in.).

Typical tolerances: Varies with metal being cast; typically 0.1mm for the first 2.5 cm (0.005 in. for the first inch) and 0.02 mm for each additional centimeter (0.002 in. for each additional inch).

Draft allowances: 1°–3°.

Surface finish: 1–2.5 μm(40–100 μin.) rms.

Because of the precision and finish, most die castings require no finish machining except for the removal of excess metal fin, or flash, around the parting line and the possible drilling or tapping of holes. Production rates are high, and a set of dies can produce many thousands of castings without significant change in dimensions. While die casting is most economical for large production volumes, quantities as low as 2000 can be justified if extensive secondary machining or surface finishing can be eliminated.

Thin-wall zinc die casting is now considered to be a significant competitor to plastic injection molding. The die castings are stronger, stiffer, more dimensionally stable, and more heat resistant. In addition, the metal parts are more resistant to ultraviolet radiation, weathering, and stress cracking when exposed to various reagents.

Figure 13-7 presents a variety of aluminum and zinc die castings. Table 13-3 compares the key features of the four dominant families of die-casting alloys, and Table 13-4 compares the mechanical properties of various die-cast alloys with the properties of other engineering materials.

13.4 SQUEEZE CASTING AND SEMISOLID CASTING

Squeeze casting and semisolid casting are methods that enable the production of high-quality, near-net-shape, thin-walled parts with good surface finish and dimensional precision as well as properties that approach those of forgings. Both processes can be viewed as derivatives of conventional high-pressure die casting, since they employ tool steel dies and apply high pressure during solidification. While the majority of applications involve alloys of aluminum, each of the processes has been successfully applied to magnesium, zinc, copper, and a limited number of ferrous alloys.

TABLE 13-3 Key Properties of the Four Major Families of Die-Cast Metal

Metal	Key Properties
Aluminum	Lowest cost per unit volume; second lightest to magnesium; highest rigidity; good machinability, electrical conductivity, and heat-transfer characteristics.
Magnesium	Lowest density, faster production than aluminum since hot-chamber cast, highest strength-to-weight ratio, good vibration damping, best machinability, can provide electromagnetic shielding.
Zinc	Attractive for small parts; tooling lasts 3–5 times longer than for aluminum; heaviest of the die-castable metals but can be cast with thin walls for possible weight savings; good impact strength, machinability, electrical conductivity, and thermal conductivity.
Zinc–Aluminum	Highest yield and tensile strength, lighter than conventional zinc alloys, good machinability.

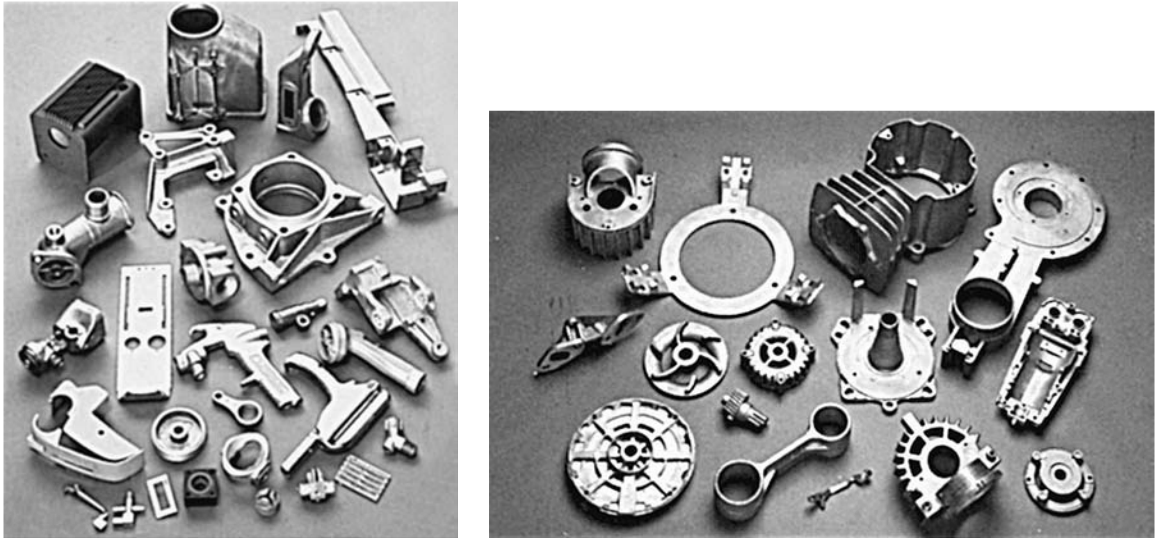

FIGURE 13-7 Variety of aluminum (left) and zinc (right) die castings. *(Courtesy of Yoder Die Casting Corporation, Dayton, OH.)*

TABLE 13-4 Comparison of Properties (Die-Cast Metals vs. Other Engineering Materials)

	Yield Strength		Tensile Strength		Elastic Modulus	
Material	MPa	ksi	MPa	ksi	GPa	10^6 psi
Die-cast alloys						
360 aluminum	170	25	300	44	71	10.3
380 aluminum	160	23	320	46	71	10.3
AZ91D magnesium	160	23	230	34	45	6.5
Zamak 3 zinc (AG4OA)	221	32	283	41	—	—
Zamak 5 zinc (AC41A)	269	39	328	48	—	—
ZA-8 (zinc–aluminum)	283–296	41–43	365–386	53–56	85	12.4
ZA-27 (zinc–aluminum)	359–379	52–55	407–441	59–64	78	11.3
Other metals						
Steel sheet	172–241	25–35	276	40	203	29.5
HSLA steel sheet	414	60	414	60	203	29.5
Powdered iron	483	70	—	—	120–134	17.5–19.5
Plastics						
ABS	—	—	55	8	7	1.0
Polycarbonate	—	—	62	9	7	1.0
Nylon 6[a]	—	—	152	22	10	1.5
PET[a]	—	—	145	21	14	2.0

[a] 30% glass reinforced.

In the *squeeze casting* process, molten metal is introduced into the die cavity of a metal mold, using large gate areas and slow metal velocities to avoid turbulence. When the cavity has filled, high pressure (20 to 175 MPa, or 3000 to 25,000 psi) is then applied and maintained during the subsequent solidification. Parts must be designed to directionally solidify toward the gates, and the gates must be sufficiently large that they freeze after solidification in the cavity, thereby allowing the pressurized runner to feed additional metal to compensate for shrinkage.

Intricate shapes can be produced at lower pressures than would normally be required for hot or cold forging. Both retractable and disposable cores can be used to create holes and internal passages. Gas and shrinkage porosity are substantially reduced, and mechanical properties are enhanced. While the squeeze casting process is most commonly applied to aluminum and magnesium castings, it has also been adapted to the production of metal-matrix composites where the pressurized metal is forced around or through foamed or fiber reinforcements that have been positioned in the mold.

For most alloy compositions, there is a range of temperatures where liquid and solid coexist, and several techniques have been developed to produce shapes from this *semisolid* material. In the *rheocasting* process, molten metal is cooled to the semisolid state with constant stirring. The stirring or shearing action breaks up the dendrites, producing a slurry of rounded particles of solid in a liquid melt. This slurry, with about a 30% solid content, can be readily shaped by high-pressure injection into metal dies. Because the slurry contains no superheat and is already partially solidified, it freezes quickly.

In the *thixocasting* variation, there is no handling of molten metal. The material is first subjected to special processing (stirring during solidification as in rheocasting) to produce solid blocks or bars with a nondendritic structure. When reheated to the semisolid condition, the *thixotropic material* can be handled like a solid but flows like a liquid when agitated or squeezed. The solid material is then cut to prescribed length, reheated to a semisolid state where the material is about 40% liquid and 60% solid, mechanically transferred to the shot chamber of a cold-chamber die-casting machine, and injected under pressure. In a variation of the process, solid metal granules or pellets are fed into a barrel chamber, where a rotating screw shears and advances the material through heating zones that raise the temperature to the semisolid region. When a sufficient volume of thixotropic material has accumulated at the end of the barrel, a shot system drives it into the die or mold at velocities of 1 to 2.5 m/sec (40–100 in./sec). The injection system of this process is a combination of the screw feed used in plastic injection molding and the plunger used in conventional die casting.

In all of the semisolid casting processes, the absence of turbulent flow during the casting operation minimizes gas pickup and entrapment. Because the material is already partially solid, the lower injection temperatures and reduced solidification time act to extend tool life. The prior solidification coupled with further solidification under pressure results in a significant reduction in solidification shrinkage and related porosity. The minimization of porosity enables the use of high-temperature heat treatments, such as the T6 solution treatment and artificial aging of aluminum, to further enhance strength. Since the thixocasting process does not use molten metal, both wrought and cast alloys have been successfully shaped. Walls have been produced with thickness as low as 0.2 mm (0.01 in.).

13.5 CENTRIFUGAL CASTING

The inertial forces of rotation or spinning are used to distribute the molten metal into the mold cavity or cavities in the *centrifugal casting* processes, a category that includes true centrifugal casting, semicentrifugal casting, and centrifuging. In *true centrifugal casting*, a dry-sand, graphite, or metal mold is rotated about either a horizontal or vertical axis at speeds of 300 to 3000 rpm. As the molten metal is introduced, it is flung to the surface of the mold, where it solidifies into some form of hollow product. The exterior profile is usually round (as with gun barrels, pipes, and tubes), but hexagons and other symmetrical shapes are also possible.

No core or mold surface is needed to shape the interior, which will always have a round profile because the molten metal is uniformly distributed by the centrifugal forces. When rotation is about the horizontal axis, as illustrated in Figure 13-8, the inner surface is always cylindrical. If the mold is oriented vertically, as in Figure 13-9, gravitational forces cause the inner surface to become parabolic, with the exact shape being a function of the speed of rotation. Wall thickness can be controlled by varying the amount of metal that is introduced into the mold.

During the rotation, the metal is forced against the outer walls of the mold with considerable force, and solidification begins at the outer surface. Centrifugal force continues to feed molten metal as solidification progresses inward. Since the process compensates for shrinkage, no risers are required. The final product has a strong, dense exterior with all of the lighter impurities (including dross and pieces of the refractory mold coating) collecting on the inner surface of the casting. This surface is often left in the final casting, but for some products, it may be removed by a light boring operation.

Products can have outside diameters ranging from 7.5 cm to 1.4 m (3 to 55 in.) and wall thickness up to 25 cm (10 in.). Pipe (up to 12 m, or 40 ft, in length),

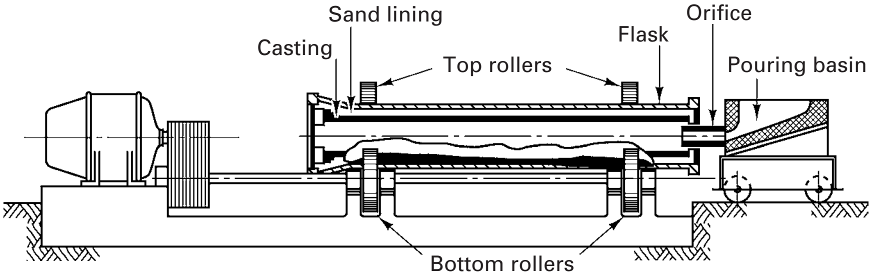

FIGURE 13-8 Schematic representation of a horizontal centrifugal casting machine. *(Courtesy of American Cast Iron Pipe Company, Birmingham, AL.)*

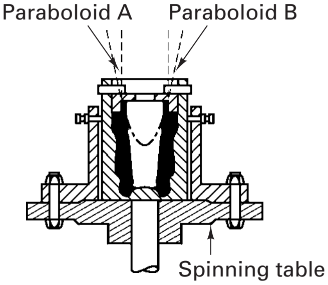

FIGURE 13-9 Vertical centrifugal casting, showing the effect of rotational speed on the shape of the inner surface. Paraboloid A results from fast spinning, whereas slower spinning will produce paraboloid B.

pressure vessels, cylinder liners, brake drums, the starting material for bearing rings, and all of the parts illustrated in Figure 13-10 can be manufactured by centrifugal casting. The equipment is rather specialized and can be quite expensive for large castings. The permanent molds can also be expensive, but they offer a long service life, especially when coated with some form of refractory dust or wash. Since no sprues, gates, or risers are required, yields can be greater than 90%. Composite products can also be made by centrifugal casting of a second material on the inside surface of an already-cast product. Table 13-5 summarizes the features of the centrifugal casting process.

In *semicentrifugal casting* (Figure 13-11) the centrifugal force assists the flow of metal from a central reservoir to the extremities of a rotating symmetrical mold. The rotational speeds are usually lower than for true centrifugal casting, and the molds may be either expendable or multiple-use. Several molds may also be stacked on top of one another, so they can be fed by a common pouring basin and sprue. In general, the mold shape is more complex than for true centrifugal casting, and cores can be placed in the mold to further increase the complexity of the product.

The central reservoir acts as a riser and must be large enough to ensure that it will be the last material to freeze. Since the lighter impurities concentrate in the center, however, the process is best used for castings where the central region will ultimately be hollow. Common products include gear blanks, pulley sheaves, wheels, impellers, and electric motor rotors.

Centrifuging, or *centrifuge centrifugal casting* (Figure 13-12), uses centrifugal action to force metal from a central pouring reservoir or sprue, through spoke-type runners, into separate mold cavities that are offset from the axis of rotation. Relatively low rotational speeds are required to produce sound castings with thin walls and intricate shapes. Centrifuging is often used to assist in the pouring of multiple-product investment casting trees.

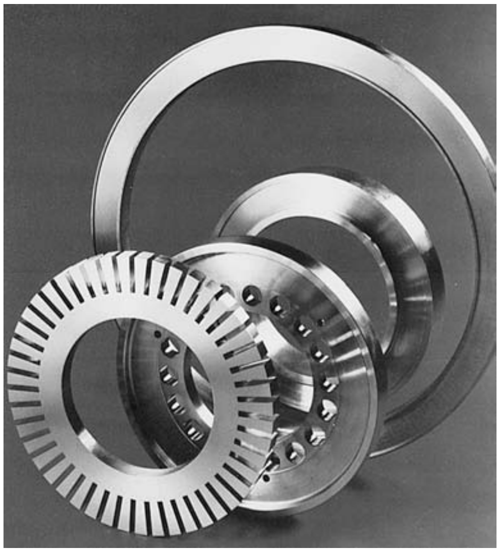

FIGURE 13-10 Electrical products (collector rings, slip rings, and rotor end rings) that have been centrifugally cast from aluminum and copper. *(Courtesy of The Electric Materials Company, North East, PA.)*

TABLE 13-5 Centrifugal Casting

Process: Molten metal is introduced into a rotating sand, metal, or graphite mold and held against the mold wall by centrifugal force until it is solidified.

Advantages: Can produce a wide range of cylindrical parts, including ones of large size; good dimensional accuracy, soundness, and cleanliness.

Limitations: Shape is limited; spinning equipment can be expensive.

Common metals: Iron; steel; stainless steel; and alloys of aluminum, copper, and nickel.

Size limits: Up to 3 m (10 ft) in diameter and 15 m (50 ft) in length.

Thickness limits: Wall thickness 2.5 to 125 mm (0.1–5 in.).

Typical tolerances: O.D. to within 2.5 mm (0.1 in.); I.D. to about 4 mm (0.15 in.).

Draft allowance: 10 mm/m ($\frac{1}{8}$ in./ft).

Surface finish: 2.5–12.5 μm (100–500 μin.) rms.

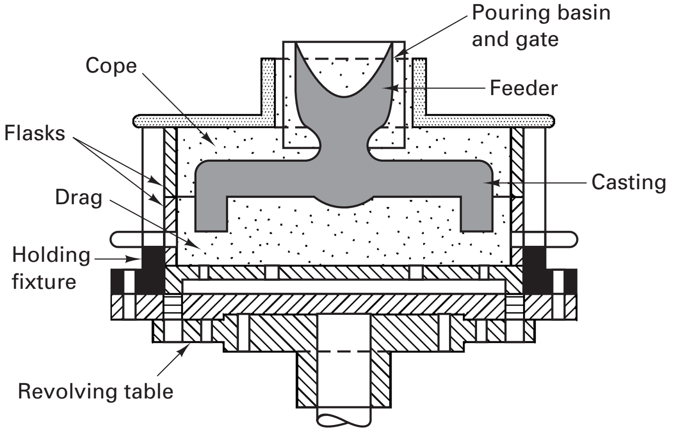

FIGURE 13-11 Schematic of a semicentrifugal casting process.

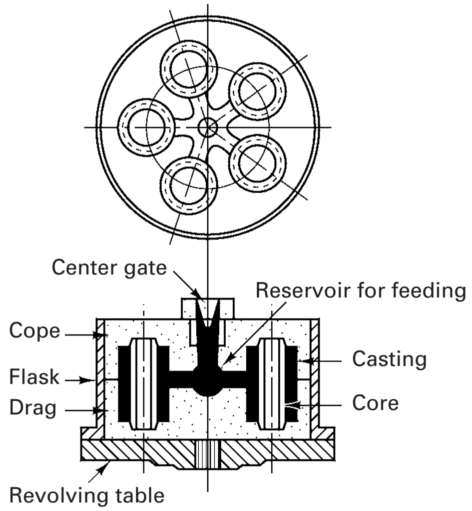

FIGURE 13-12 Schematic of a centrifuging process. Metal is poured into the central pouring sprue and spun into the various mold cavities. *(Courtesy of American Cast Iron Pipe Company, Birmingham, AL.)*

Centrifuging can also be used to drive pewter, zinc, or wax into spinning rubber molds to produce products with close tolerances, smooth surfaces, and excellent detail. These can be finished products or the low-melting-point patterns that are subsequently assembled to form the "trees" for investment casting.

13.6 CONTINUOUS CASTING

As discussed in Chapter 6 and depicted in Figure 6-5, *continuous casting* is usually employed in the solidification of basic shapes that become the feedstock for deformation processes such as rolling and forging. By producing a special mold, continuous casting can also be used to produce long lengths of complex cross-section product, such as the one depicted in Figure 13-13. Since each product is simply a cutoff section of the continuous strand, a single mold is all that is required to produce a large number of pieces. Quality is high as well, since the metal can be protected from contamination during melting and pouring, and only a minimum of handling is required.

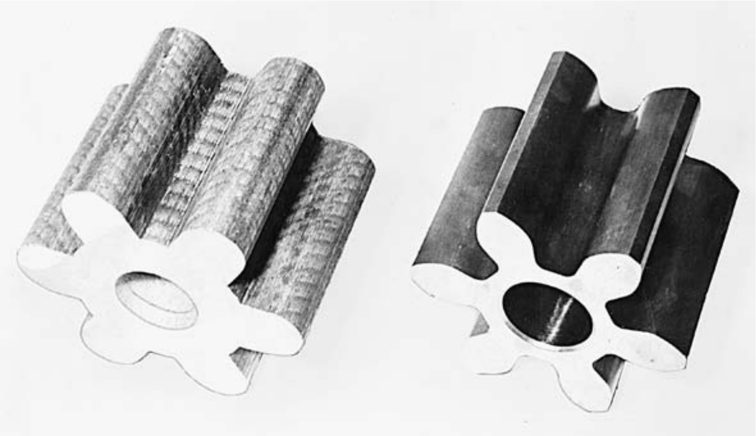

FIGURE 13-13 Gear produced by continuous casting. (Left) As-cast material; (right) after machining. *(Courtesy of ASARCO, Tucson, AZ.)*

■ 13.7 MELTING

All casting processes begin with molten metal. Ideally, the molten metal should be available in an adequate amount, at the desired temperature, with the desired chemistry and minimum contamination. The melting furnace should be capable of holding material for an extended period of time without deterioration of quality, be economical to operate, and be capable of being operated without contributing to the pollution of the environment. Except for experimental or very small operations, virtually all foundries use cupolas, air furnaces (also known as direct fuel-fired furnaces), electric-arc furnaces, electric resistance furnaces, or electric induction furnaces. In locations such as fully integrated steel mills, molten metal may be taken directly from a steelmaking furnace and poured into casting molds. This practice is usually reserved for exceptionally large castings. For small operations, gas-fired crucible furnaces are common, but these have rather limited capacities.

Selection of the most appropriate melting method depends on such factors as (1) the temperature needed to melt and superheat the metal, (2) the alloy being melted and the form of available charge material, (3) the desired melting rate or the desired quantity of molten metal, (4) the desired quality of the metal, (5) the availability and cost of various fuels, (6) the variety of metals or alloys to be melted, (7) whether melting is to be batch or continuous, (8) the required level of emission control, and (9) the various capital and operating costs.

The feedstock entering the melting furnace may take several forms. While prealloyed ingot may be purchased for remelt, it is not uncommon for the starting material to be a mix of commercially pure primary metal and commercial scrap, along with recycled gates, runners, sprues, and risers, as well as defective castings. The chemistry can be adjusted through alloy additions in the form of either pure materials or master alloys that are high in a particular element but are designed to have a lower melting point than the pure material and a density that allows for good mixing. Preheating the metal being charged is another common practice, and it can increase the melting rate of a furnace by as much as 30%.

CUPOLAS

A significant amount of gray, nodular, and white cast iron is still melted in *cupolas*, although many foundries have converted to electric induction furnaces. A cupola is a refractory-lined, vertical steel shell into which alternating layers of coke (carbon), iron (pig iron and/or scrap), limestone or other flux, and possible alloy additions are charged and melted under forced air draft. The operation is similar to that of a blast furnace, with the molten metal collecting at the bottom of the cupola to be tapped off either continuously or at periodic intervals.

Cupolas are simple and economical, can be obtained in a wide range of capacities, and can produce cast iron of excellent quality if the proper raw materials are used and good control is practiced. Control of temperature and chemistry can be somewhat difficult, however. The nature of the charged materials and the reactions that occur within the cupola can all affect the product chemistry. Moreover, by the time the final chemistry is determined through analysis of the tapped product, a substantial charge of material is already working its way through the furnace. Final chemistry adjustments, therefore, are often performed in the ladle, using the various techniques of ladle metallurgy discussed in Chapter 6.

Various methods can be used to increase the melting rate and improve the economy of a cupola operation. In a hot-blast cupola, the stack gases are put through a heat exchanger to preheat the incoming air. Oxygen-enriched blasts can also be used to increase the temperature and accelerate the rate of melting. Plasma torches can be employed to melt the iron scrap. With typical enhancements, the melting rate of a continuously operating cupola can be quite high, such that production of 120 tons of hot metal per hour is not uncommon.

INDIRECT FUEL-FIRED FURNACES (OR CRUCIBLE FURNACES)

Small batches of nonferrous metal are often melted in *indirect fuel-fired furnaces* that are essentially crucibles or holding pots whose outer surface is heated by an external flame. The containment crucibles are generally made from clay and graphite, silicon carbide, cast iron, or steel. Stirring action, temperature control, and chemistry control are often poor, and furnace size and melting rate are limited. Nevertheless, these furnaces do offer low capital and operating cost.

Better control of temperature and chemistry can be obtained, however, if the crucible furnaces are heated by electrical resistance heating.

DIRECT FUEL-FIRED FURNACES OR REVERBERATORY FURNACES

Direct fuel-fired furnaces, also known as *reverberatory furnaces*, are similar to small open-hearth furnaces but are less sophisticated. As illustrated in Figure 13-14, a fuel-fired flame passes directly over the pool of molten metal, with heat being transferred to the metal through both radiant heating from the refractory roof and walls and convective heating from the hot gases. Capacity is significantly greater than that of the crucible furnace, but the operation is still limited to the batch melting of nonferrous metals and the holding of cast iron that has been previously melted in a cupola. The rate of heating and melting and the temperature and composition of the molten metal are all easily controlled.

ARC FURNACES

Arc furnaces are the preferred method of melting in many foundries because of the (1) rapid melting rates, (2) ability to hold the molten metal for any desired period of time, and (3) greater ease of incorporating pollution control equipment. The basic features and operating cycle of a *direct-arc furnace* can be described with the aid of Figure 13-15. The top of the wide, shallow unit is first lifted or swung aside to permit the introduction of charge material. The top is then repositioned, and the electrodes are lowered to create an arc between the electrodes and the metal charge. The path of the heating current is usually through one electrode, across an arc to the metal charge, through the metal charge, and back through another arc to another electrode.

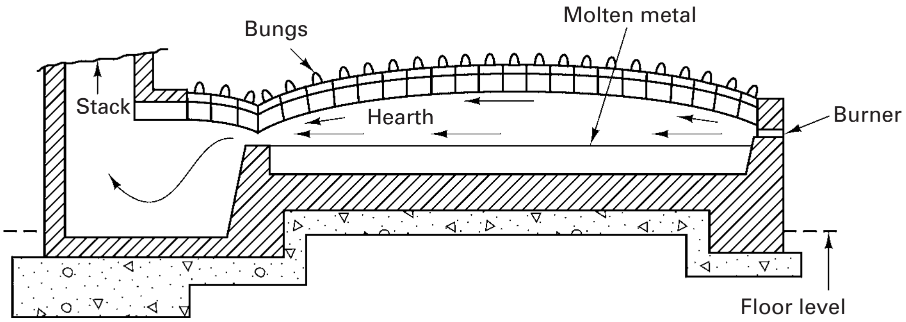

FIGURE 13-14 Cross section of a direct fuel-fired furnace. Hot combustion gases pass across the surface of a molten metal pool.

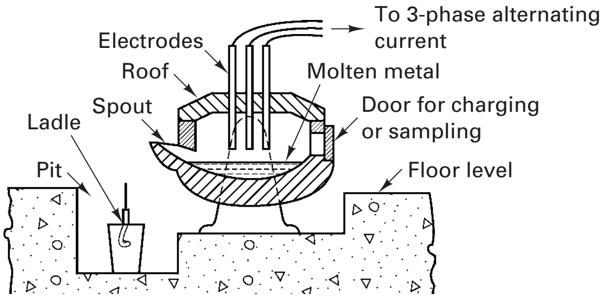

FIGURE 13-15 Schematic diagram of a three-phase electric-arc furnace.

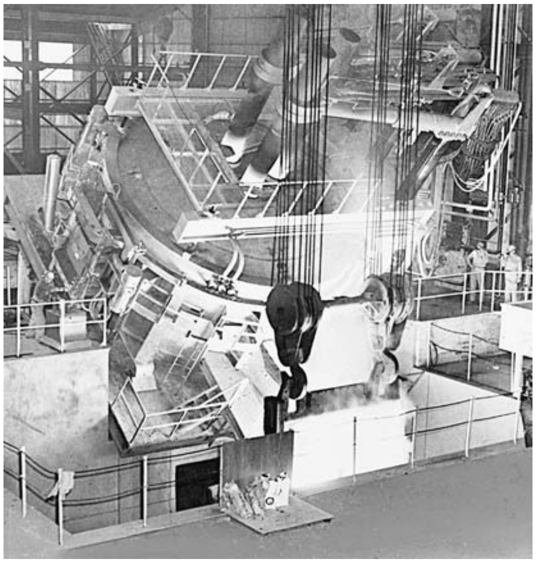

FIGURE 13-16 Electric-arc furnace, tilted for pouring. *(Courtesy of Lectromelt Corporation, Pittsburgh, PA.)*

Fluxing materials are usually added to create a protective slag over the pool of molten metal. Reactions between the slag and the metal serve to further remove impurities and are efficient because of the large interface area and the fact that the slag is as hot as the metal. Because the metal is covered and can be maintained at a given temperature for long periods of time, arc furnaces can be used to produce high-quality metal of almost any desired composition. They are available in sizes up to about 200 tons (but capacities of 25 tons or less are most common), and up to 50 tons per hour can be melted conveniently in batch operations. Arc furnaces are generally used with ferrous alloys, especially steel, and provide good mixing and homogeneity to the molten bath. Unfortunately, the noise and level of particle emissions can be rather high, and the consumption of electrodes, refractories, and power results in high operating costs. Figure 13-16 shows the pouring of an electric-arc furnace. Note the still-glowing electrodes at the top of the furnace.

INDUCTION FURNACES

Because of their very rapid melting rates and the relative ease of controlling pollution, electric *induction furnaces* have become another popular means of melting metal. There are two basic types of induction furnaces. The *high-frequency*, or *coreless* units, shown schematically in Figure 13-17, consist of a crucible surrounded by a water-cooled coil of copper tubing. A high-frequency electrical current passes through the coil, creating an alternating magnetic field. The varying magnetic field induces secondary electrical currents in the metal being melted, which bring about a rapid rate of heating.

Coreless induction furnaces are used for virtually all common alloys, with the maximum temperature being limited only by the refractory and the ability to insulate against heat loss. They provide good control of temperature and composition and are available in a range of capacities up to about 65 tons. Because there is no contamination from the heat source, they produce very pure metal. Operation is generally on a batch basis.

Low-frequency or *channel-type* induction furnaces are also seeing increased use. As shown in Figure 13-18, only a small channel is surrounded by the primary (current-carrying or heating) coil. A secondary coil is formed by a loop, or channel, of molten metal, and all the liquid metal is free to circulate through the loop and gain heat. To start, enough molten metal must be placed into the furnace to fill the secondary coil, with the remainder of the charge taking a variety of forms. The heating rate is high, and the temperature can be accurately controlled. As a result, channel-type furnaces are often preferred as holding furnaces, where the molten metal is maintained at a constant temperature for an extended period of time. Capacities can be quite large, up to about 250 tons.

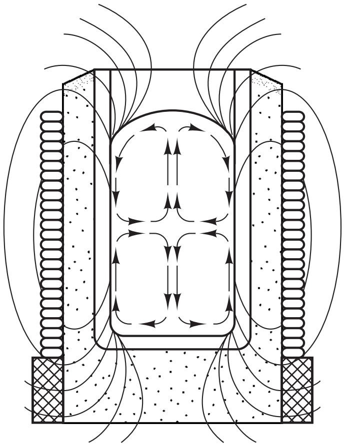

FIGURE 13-17 Schematic showing the basic principle of a coreless induction furnace.

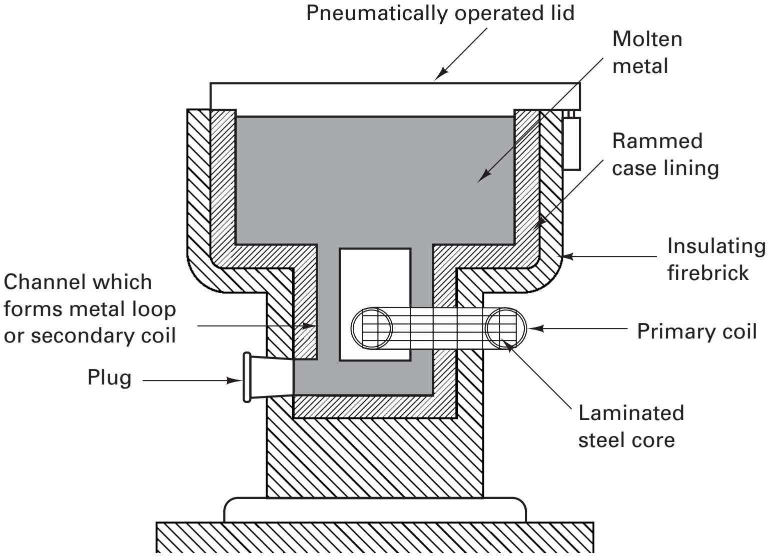

FIGURE 13-18 Cross section showing the principle of the low-frequency or channel-type induction furnace.

13.8 POURING PRACTICE

Some type of pouring device, or ladle, is usually required to transfer the metal from the melting furnace to the molds. The primary considerations for this operation are (1) to maintain the metal at the proper temperature for pouring and (2) to ensure that only high-quality metal is introduced into the molds. The specific type of *pouring ladle* is determined largely by the size and number of castings to be poured. In small foundries, a handheld, shank-type ladle is used for manual pouring. In larger foundries, either bottom-pour or teapot-type ladles are used, like the ones illustrated in Figure 11-6. These are often used in conjunction with a conveyor line that moves the molds past the pouring station. Because metal is extracted from beneath the surface, slag and other impurities that float on top of the melt are not permitted to enter the mold.

High-volume, mass-production foundries often use automatic pouring systems, like the one shown in Figure 13-19. Molten metal is transferred from a main melting furnace to a holding furnace. A programmed amount of molten metal is further transferred into individual pouring ladles and is then poured into the corresponding molds

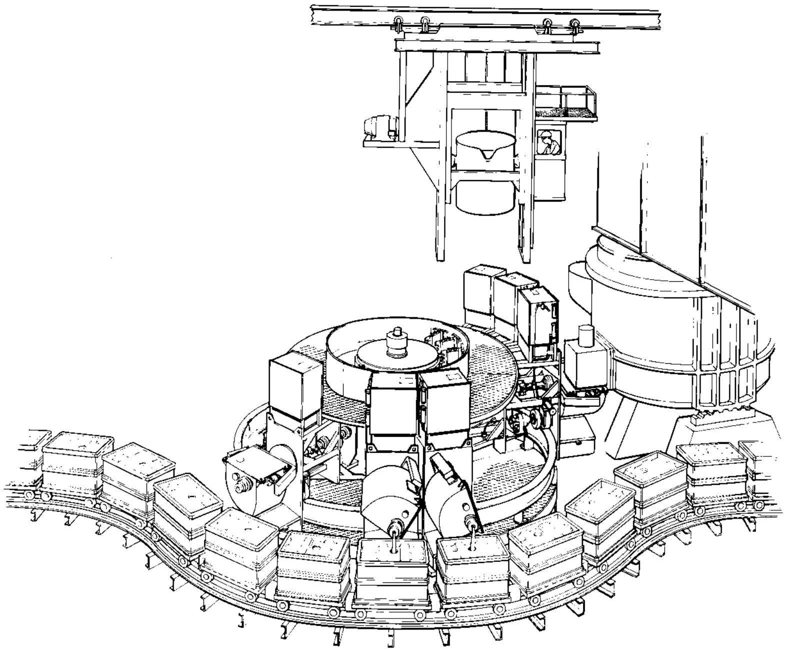

FIGURE 13-19 Automatic pouring of molds on a conveyor line. *(Courtesy of Roberts Sinto Corporation, Lansing, MI.)*

as they traverse by the pouring station. Laser-based control units position the pouring ladle over the sprue and control the flow rate into the pouring cup.

■ 13.9 CLEANING, FINISHING, AND HEAT TREATING OF CASTINGS

CLEANING AND FINISHING

After solidification and removal from the mold, most castings require some additional cleaning and finishing. Specific operations may include all or several of the following:

1. Removing cores
2. Removing gates and risers
3. Removing fins, flash, and rough spots from the surface
4. Cleaning the surface
5. Repairing any defects

Cleaning and finishing operations can be quite expensive, so consideration should be given to their minimization when designing the product and selecting the specific method of casting. In addition, consideration should also be directed toward the possibility of automating the cleaning and finishing.

Sand cores can usually be removed by mechanical shaking. At times, however, they must be removed by chemically dissolving the core binder. On small castings, sprues, gates, and risers can sometimes be knocked off. For larger castings, a cutting operation is usually required. Most nonferrous metals and cast irons can be cut with an abrasive cutoff wheel, power hacksaw, or band saw. Steel castings frequently require an oxyacetylene torch. Plasma arc cutting can also be used.

The specific method of cleaning often depends on the size and complexity of the casting. After the gates and risers have been removed, small castings are often tumbled in barrels to remove fins, flash, and sand that may have adhered to the surface. Tumbling may also be used to remove cores and, in some cases, gates and risers. Metal shot or abrasive material is often added to the barrel to aid in the cleaning. Conveyors can be used to pass larger castings through special cleaning chambers, where they are subjected to blasts of abrasive or cleaning material. Extremely large castings usually require manual finishing, using pneumatic chisels, portable grinders, and manually directed blast hoses.

While defect-free castings are always desired, flaws such as cracks, voids, and laps are not uncommon. In some cases, especially when the part is large and the production quantity is small, it may be more attractive to repair the part rather than change the pattern, die, or process. If the material is weldable, repairs are often made by removing the defective region (usually by chipping or grinding) and filling the created void with deposited weld metal. Porosity that is at or connected to free surfaces can be filled with resinous material, such as polyester, by a process known as *impregnation*. If the pores are filled with a lower-melting-point metal, the process becomes *infiltration*. (See Chapter 16 for a further discussion of these processes.)

HEAT TREATMENT AND INSPECTION OF CASTINGS

Heat treatment is an attractive means of altering properties while retaining the shape of the product. Steel castings are frequently given a full anneal to reduce the hardness and brittleness of rapidly cooled, thin sections and to reduce the internal stresses that result from uneven cooling. Nonferrous castings are often heat treated to provide chemical homogenization or stress relief as well as to prepare them for subsequent machining. For final properties, virtually all of the treatments discussed in Chapter 5 can be applied. Ferrous-metal castings often undergo a quench-and-temper treatment, and many nonferrous castings are age hardened to impart additional strength. The variety of heat treatments is largely responsible for the wide range of properties and characteristics available in cast metal products.

Virtually all of the nondestructive *inspection techniques* can be applied to cast metal products. X-ray radiography, liquid penetrant inspection, and magnetic particle inspection are extremely common.

13.10 AUTOMATION IN FOUNDRY OPERATIONS

Many of the operations that are performed in a foundry are ideally suited for robotic automation since they tend to be dirty, dangerous, or dull. Robots can dry molds, coat cores, vent molds, and clean or lubricate dies. They can tend stationary, cyclic equipment, such as die-casting machines, and if the machines are properly grouped, one robot can often service two or three machines. In the finishing room, robots can be equipped with plasma cutters or torches to remove sprues, gates, and runners. They can perform grinding and blasting operations, as well as various functions involved in the heat treatment of castings.

In the investment-casting process, robots can be used to dip the wax patterns into refractory slurry and produce the desired molds. In a similar manner, robots have been used to dip the Styrofoam patterns of the full-mold and lost-foam processes in their refractory coating and hang them on conveyors to dry. In a fully automated lost-foam operation, robots could be used to position the pattern, fill the flask with sand, pour the metal, and use a torch to remove the sprue.

13.11 PROCESS SELECTION

As shown in the individual process summaries that have been included throughout Chapters 12 and 13, each of the casting processes has a characteristic set of capabilities, assets, and limitations. The requirements of a particular product (such as size, complexity, required dimensional precision, desired surface finish, total quantity to be made, and desired rate of production) often limit the number of processes that should be considered as production candidates. Further selection is usually based on cost.

Some aspects of product cost, such as the cost of the material and the energy required to melt it, are somewhat independent of the specific process. The cost of other features, such as patterns, molds, dies, melting and pouring equipment, scrap material, cleaning, inspection, and all related labor, can vary markedly and be quite dependent on the process. For example, pattern and mold costs for sand casting are quite a bit less than the cost of die-casting dies. Die casting, on the other hand, offers high production rates and a high degree of automation. When a small quantity of parts is desired, the cost of the die or tooling must be distributed over the total number of parts, and unit cost (or cost per casting) is high. When the total quantity is large, the tooling cost is distributed over many parts, and the cost per piece decreases.

Figure 13-20 shows the relationship between unit cost and production quantity for a product that can be made by both sand and die casting. Sand casting is an expendable mold process. Since an individual mold is required for each pour, increasing quantity does not lead to a significant drop in unit cost. Die casting involves a multiple-use mold, and the cost of the die can be distributed over the total number of parts. As shown in the figure, sand casting is often less expensive for small production runs, and processes such as die casting are preferred for large quantities. One should note that while the die-casting curve in Figure 13-20 is a smooth line, it is not uncommon for an actual curve to contain abrupt discontinuities. If the lifetime of a set of tooling is 50,000 casts, the

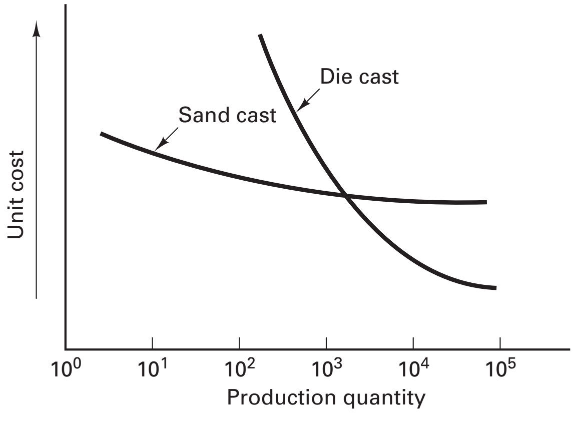

FIGURE 13-20 Typical unit cost of castings comparing sand casting and die casting. Note how the large cost of a die-casting die diminishes as it is spread over a larger quantity of parts.

cost *per part* for 45,000 pieces, using one set of tooling, would actually be less than for 60,000 pieces, since the latter would require a second set of dies.

In most cases, multiple processes are reasonable candidates for production, and the curves for all of the options should be included. The final selection is often based on a combination of economic, technical, and management considerations.

Table 13-6 presents a comparison of casting processes, including green-sand casting, chemically bonded sand molds (shell, sodium silicate, and air-set), ceramic mold and investment casting, permanent-mold casting, and die casting. The processes are compared on the basis of cost for both small and large quantities, thinnest section, dimensional precision, surface finish, ease of casting a complex shape, ease of changing the design while in production, and range of castable materials.

TABLE 13-6 Comparison of Casting Processes

Property or Characteristic	Green-Sand Casting	Chemically Bonded Sand (Shell, Sodium Silicate, Air-Set)	Ceramic Mold and Investment Casting	Permanent-Mold Casting	Die Casting
Relative cost for small quantity	Lowest	Medium high	Medium	High	Highest
Relative cost for large quantity	Low	Medium high	Highest	Low	Lowest
Thinnest section (inches)	$\frac{1}{10}$	$\frac{1}{10}$	$\frac{1}{16}$	$\frac{1}{8}$	$\frac{1}{32}$
Dimensional precision (+/− in inches)	0.01–0.03	0.005–0.015	0.01–0.02	0.01–0.05	0.001–0.015
Relative surface finish	Fair to good	Good	Very good	Good	Best
Ease of casting complex shape	Fair to good	Good	Best	Fair	Good
Ease of changing design while in production	Best	Fair	Fair	Poor	Poorest
Castable metals	Unlimited	Unlimited	Unlimited	Low-melting-point metals	Low-melting-point metals

Key Words

arc furnace
centrifugal casting
centrifuging
cold-chamber die-casting machine
continuous casting
cupola
die casting
direct fuel-fired furnace
gooseneck die-casting machine
heat checking
heat treatment
heated-manifold direct-injection die casting
hot-chamber die-casting machine
impregnation
indirect fuel-fired furnace
induction furnace
infiltration
inserts
inspection
low-pressure permanent-mold casting
permanent-mold casting
pouring ladle
retractable cores
reverberatory furnaces
rheocasting
semicentrifugal casting
semipermanent mold casting
semisolid casting
slush casting
squeeze casting
thermal fatigue
thixocasting
thixotropic material
true centrifugal casting
vacuum permanent-mold casting
venting

Review Questions

1. What are some of the major disadvantages of the expendable-mold casting processes?
2. What are some possible limitations of multiple-use molds?
3. What are some common mold materials for permanent-mold casting? What are some of the metals more commonly cast?
4. Describe some of the process advantages of permanent-mold casting.
5. Why might low production runs be unattractive for permanent-mold casting?
6. What features affect the life of a permanent mold?

7. How is venting provided in the permanent-mold process?
8. Why are permanent-mold castings generally removed from the mold immediately after solidification has been completed?
9. What types of products would be possible candidates for manufacture by slush casting?
10. How does low-pressure permanent-mold casting differ from the traditional gravity-pour process?
11. What are some of the attractive features of the low-pressure permanent-mold process?
12. What are some additional advantages of vacuum permanent-mold casting over the low-pressure process?
13. Contrast the feeding pressures on the molten metal in low-pressure permanent molding and die casting.
14. Contrast the materials used to make dies for gravity-pour permanent-mold casting and die casting. Why is there a notable difference?
15. By what mechanisms do die-casting dies typically fail?
16. Why might it be advantageous to vary the pressure on the molten metal during the die-casting cycle?
17. For what types of materials would a hot-chamber die-casting machine be appropriate?
18. What metals are routinely cast with cold-chamber die-casting machines?
19. How does the air in the mold cavity escape in the die-casting process?
20. Are risers employed in die casting? Can sand cores be used?
21. What are some of the attractive features of die casting compared to alternative casting methods?
22. When might low quantities be justified for the die-casting process?
23. Describe the squeeze casting process.
24. What is a thixotropic material? How does it provide an attractive alternative to squeeze casting or rheocasting?
25. What are some of the attractive features of semisolid casting?
26. Contrast the structure and properties of the outer and inner surfaces of a centrifugal casting.
27. What are the key differences between true centrifugal casting, semicentrifugal casting, and centrifuging?
28. How can continuous casting be used in the direct production of products?
29. What are some of the factors that influence the selection of a furnace type or melt procedure in a casting operation?
30. What are some of the possible feedstock materials that may be put in foundry melt furnaces?
31. What types of metals are commonly melted in cupolas?
32. What are some of the ways that the melting rate of a cupola can be increased?
33. What are some of the pros and cons of indirect fuel-fired furnaces?
34. What are some of the attractive features of arc furnaces in foundry applications?
35. Why are channel induction furnaces attractive for metal-holding applications where molten metal must be held at a specified temperature for long periods of time?
36. What are the primary functions of a pouring operation?
37. What are some of the typical cleaning and finishing operations that are performed on castings?
38. What are some common ways to remove cores from castings? To remove runners, gates, and risers?
39. What are some of the alternative methods of cleaning and finishing castings?
40. How might defective castings be repaired to permit successful use in their intended applications?
41. What are some of the ways that industrial robots can be employed in metal-casting operations?
42. Describe some of the features that affect the cost of a cast product. Why might the cost vary significantly with the quantity to be produced?
43. What are some of the key factors that should be considered when selecting a casting process?

www.wiley.com/college/degarmo

Chapter 13 CASE STUDY

Baseplate for a Household Steam Iron

The item depicted in the figure is the baseplate of a high-quality household steam iron. It is rated for operation at up to 1200 watts and is designed to provide both steady steam and burst of steam features. Incorporated into the design is an integral electrical resistance heating "horseshoe" that must be thermally coupled to the baseplate but remain electrically insulated. (This component often takes the form of a resistance heating wire, surrounded by ceramic insulation, all encased in a metal tube.) The steam emerges through a number of small vent holes in the base, each about 1/16 inch in diameter. There are about a dozen larger threaded recesses, about 1/8 inch in diameter, that are used in assembling the various components.

1. Discuss the various features that this component must possess in order to function in an adequate fashion. Consider strength, impact resistance, thermal conductivity, corrosion resistance, weight, and other factors.
2. What material or materials would appear to be strong candidates?
3. What are some possible means of producing the desired shape? Which would you prefer? Could the heating element assembly be incorporated during manufacture, or does it have to be added as a secondary operation? What are the major advantages of the method you propose?
4. Could all of the design features (holes, webs, and recesses) be incorporated in the initial manufacturing operation, or would secondary processing be required? If secondary processing is required, for what features, and how would you recommend that they be produced?
5. Some commercial irons have baseplates for which the bottom surfaces have been finished by a simple buff and polish, while others have a Teflon coating or have been anodized. If your desire is to produce a high-quality product, what form of surface finishing would you recommend?

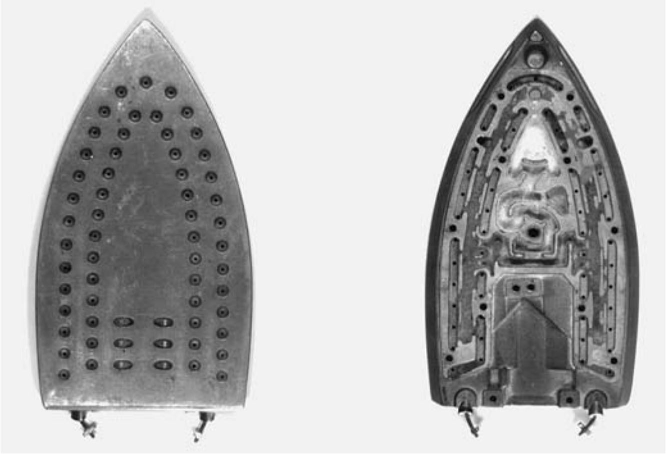

CHAPTER 14

FABRICATION OF PLASTICS, CERAMICS, AND COMPOSITES

14.1 INTRODUCTION

In Chapters 6, 7, and 8, *plastics, ceramics*, and *composites* were shown to be substantially different from metals in both structure and properties. It is reasonable to expect, therefore, that the principles of material selection and product design, as well as the fabrication processes, will also be somewhat different. In addition, there will also be some similarities. The specific material will still be selected for its ability to provide the required properties and the fabrication processes for their ability to produce the desired shape in an economical and practical manner.

In terms of differences, plastics, ceramics, and composites tend to be used closer to their design limits, and many of the fabrication processes convert the raw material into a finished product in a single operation. Large, complex shapes can often be formed as a single unit, eliminating the need for multipart assembly operations. Materials in these classes can often provide integral and variable color, and the processes used to manufacture the shape can frequently produce the desired finish and precision. As a result, finishing operations are often unnecessary—an attractive feature since, for many of these materials, altering the final dimensions or surface would be both difficult and costly. The joining and fastening operations used with these materials also tend to be different from those used with metals.

As with metals, the properties of these materials are affected by the processes used to produce the shape. The fabrication of an acceptable product, therefore, involves the selection of both (1) an appropriate material and (2) a companion method of processing, such that the resulting combination provides the desired shape, properties, precision, and finish.

14.2 FABRICATION OF PLASTICS

The manufacture of a successful plastic product requires satisfying the various mechanical and physical property requirements through the use of the most economical resin or compound that will perform satisfactorily, and coupling it with a manufacturing process that is compatible with both the part design and the selected material.

Chapter 8 presented material about the wide variety of plastics or polymers that are currently used as engineering materials. As we move our attention to the fabrication of parts and shapes, we find that there are also a variety of processes from which to choose. Determination of the preferred method depends on the desired size, shape, and quantity, as well as whether the polymer is a *thermoplastic, thermoset*, or *elastomer*. Thermoplastic polymers can be heated to produce either a soft, formable solid or a liquid. The material can then be cast, injected into a mold, or forced into or through dies to produce a desired shape. Thermosetting polymers have far fewer options, because once the polymerization has occurred, the framework structure is established and no further deformation can occur. Thus the polymerization reaction must take place during the shape-forming operation. Elastomers are sufficiently unique that they will be treated in a separate section of this chapter.

Casting, blow molding, compression molding, transfer molding, cold molding, injection molding, reaction injection molding, extrusion, thermoforming, rotational molding, and *foam molding* are all processes that are used to shape polymers. Each has its distinct set of advantages and limitations that relate to part design, compatible materials, and production cost. To make optimum selections, we must be familiar with the shape capabilities of a process as well as how the process affects the properties of the material.

CASTING

Casting is the simplest of the shape-forming processes because no fillers are used and no pressure is required. While not all plastics can be cast, there are a number of castable thermoplastics, including acrylics, nylons, urethanes, and PVC plastisols. The thermoplastic polymer is simply melted, and the liquid is poured into a container having the shape of the desired part. Several variations of the process have been developed. Small products can be cast directly into shaped molds. Plate glass can be used as a mold to cast individual pieces of thick plastic sheet. Continuous sheets and films can be produced by injecting the liquid polymer between two moving belts of highly polished stainless steel, the width and thickness being set by resilient gasket strips on either end of the gap. Thin sheets can be made by ejecting molten liquid from a gap-slot die onto a temperature-controlled chill roll. The molten plastic can also be spun against a rotating mold wall (centrifugal casting) to produce hollow or tubular shapes.

Some thermosets (such as phenolics, polyesters, epoxies, silicones, and urethanes) can also be cast, as well as any resin that will polymerize at low temperatures and atmospheric pressure. Because of the need for curing, the casting of thermoset resins usually involves additional processing, often some form of heating while in the mold. Figure 14-1 depicts a process where a steel pattern is dipped into molten lead, withdrawn, and allowed to cool. A thin lead sheath is produced when the pattern is removed, and this becomes the mold for the plastic resin. Curing occurs, either at room temperature or by heating for long times at temperatures in the range of 65° to 95°C (150° to 200°F). After curing, the product is removed, and the lead sheaths can be reused.

Since cast plastics contain no fillers, they have a distinctly lustrous appearance, and a wide range of transparent and translucent colors are available. Since the product is shaped as a liquid, fiber or particulate reinforcement can be easily incorporated. The process is relatively inexpensive because of the comparative lack of costly dies, equipment, and controls. Typical products include sheets, plates, films, rods, and tubes, as well

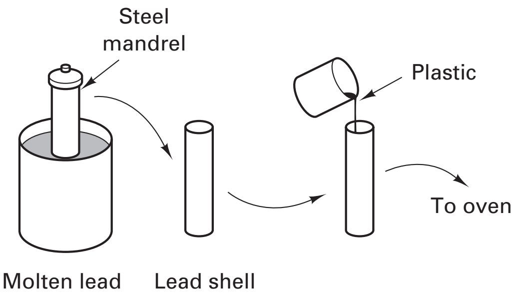

FIGURE 14-1 Steps in the casting of plastic parts using a lead shell mold.

as small objects, such as jewelry, ornamental shapes, gears, and lenses. While dimensional precision can be quite high, quality problems can occur because of inadequate mixing, air entrapment, gas evolution, and shrinkage.

BLOW MOLDING

A variety of *blow molding* processes have been developed, the most common being used to convert thermoplastic polyethylene, polyvinyl chloride (PVC), polypropylene, and PEEK resins into bottles and other hollow-shape containers. A solid-bottom, hollow-tube preform, known as a *parison*, is made from heated plastic by either extrusion or injection molding. The heated preform is then positioned between the halves of a split mold, the mold closes, and the preform is expanded against the mold by air or gas pressure. The mold is then cooled, the halves separated, and the product is removed. Any flash is then trimmed for direct recycling. Figure 14-2 depicts a form of this process where the starting material is a simple tube and the solid bottom is created by the pinching action of die closure. Blow molding has recently expanded to include the engineering thermoplastics and has been used to produce products as diverse as automotive fuel tanks, seat backs, ductwork, and bumper beams.

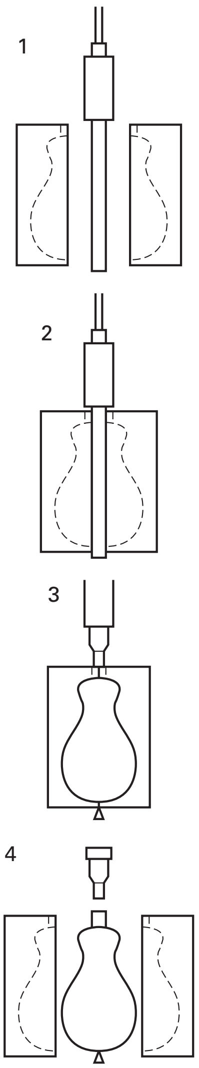

FIGURE 14-2 Steps in blow molding plastic parts: (1) a tube of heated plastic is placed in the open mold; (2) the mold closes over the tube, simultaneously sealing the bottom; (3) air expands the tube against the sides of the mold; and (4) after sufficient cooling, the mold opens to release the product.

Variations of blow molding have been designed to provide both axial and radial expansion of the plastic (for enhanced strength) as well as to produce multilayered products. In one process, a sheet of heated plastic is placed between upper and lower cavities, the lower one having the shape of the product. Both cavities are then pressurized to 2 to 4 MPa (300 to 600 psi) with a nonreactive gas such as argon. When the pressure in the lower segment is then vented, the gas in the upper segment "blows" the material into the lower die cavity.

Because the thermoplastics must be cooled before removal from the mold, the molds for blow molding must contain the desired cavity as well as a cooling system, venting system, and other design features. The mold material must provide thermal conductivity and durability while being inexpensive and compatible with the resins being processed. Beryllium copper, aluminum, tool steels, and stainless steels are all popular mold materials.

COMPRESSION MOLDING OR HOT-COMPRESSION MOLDING

In *compression molding*, illustrated schematically in Figure 14-3, solid granules or preformed tablets of *unpolymerized* plastic are introduced into an open, heated cavity. A heated plunger then descends to close the cavity and apply pressure. As the material melts and becomes fluid, it is driven into all portions of the cavity. The heat and pressure are maintained until the material has "set" (i.e., cured or polymerized). The mold is then opened and the part is removed. A wide variety of heating systems and mold materials are used, and multiple cavities can be placed within a mold to produce more than one part in a single pressing. The process is simple and used primarily with the thermosetting polymers, although recent developments permit the shaping of thermoplastics and composites. Cycle times are set by the rate of heat transfer and the reaction or curing rate of the polymer. They typically range from under 1 minute to as much as 20 minutes or more.

FIGURE 14-3 The hot-compression molding process: (1) solid granules or a preform pellet is placed in a heated die; (2) a heated punch descends and applies pressure; and (3) after curing (thermosets) or cooling (thermoplastics), the mold is opened and the part is removed.

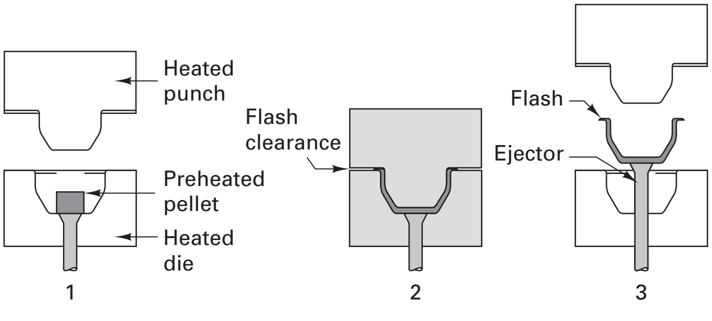

The tool and machinery costs for compression molding are often lower than for competing processes, and the dimensional precision and surface finish are high, thereby reducing or eliminating secondary operations. Compression molding is most economical when it is applied to small production runs of parts requiring close tolerances, high impact strength, and low mold shrinkage. It is a poor choice when the part contains thick sections (the cure times become quite long) or when large quantities are desired. Most products have relatively simple shapes because the flow of material is rather limited. Typical compression-molded parts include gaskets, seals, exterior automotive panels, aircraft fairings, and a wide variety of interior panels.

More recently, compression molding has been used to form fiber-reinforced plastics, both thermoplastics and thermosets, into parts with properties that rival the engineering metals. In the thermoset family, polyesters, epoxies, and phenolics can be used as the base of fiber-containing sheet-molding compound, bulk-molding compound, or sprayed-up reinforcement mats. These are introduced into the mold and shaped and cured in the normal manner. Cycle times range from about 1 to 5 minutes per part, and typical products include wash basins, bathtubs, equipment housings, and various electrical components.

If the starting material is a fiber-containing thermoplastic, precut blanks are first heated in an infrared oven to produce a soft, pliable material. The blanks are then transferred to the press, where they are shaped and cooled in specially designed dies. Compared to the thermosets, cycle times are reduced and the scrap is often recyclable. In addition, the products can be joined or assembled using the thermal "welding" processes applied to plastics.

Compression molding equipment is usually rather simple, typically consisting of a hydraulic or pneumatic press with parallel platens that apply the heat and pressure. Pressing areas range from 15 cm^2 (6 in.^2) to as much as 2.5 m^2 (8 ft^2), and the force capacities range from 6 to 9000 metric tons. The molds are usually made of tool steel and are polished or chrome plated to improve material flow and product quality. Mold temperatures typically run between 150° and 200°C (300° and 400°F) but can go as high as 650°C (1200°F). They are heated by a variety of means, including electric heaters, steam, oil, and gas.

TRANSFER MOLDING

Transfer molding is sometimes used to reduce the turbulence and uneven flow that can result from the high pressures of hot-compression molding. As shown in Figure 14-4, the *unpolymerized* raw material is now placed in a plunger cavity, where it is heated until molten. The plunger then descends, forcing the molten plastic through channels or runners into adjoining die cavities. Temperature and pressure are maintained until the thermosetting resin has completely cured. To shorten the cycle and extend the lifetime of the cavity, plunger, runner, and gates, the charge material may be preheated before being placed in the plunger cavity.

Because the material enters the die cavities as a liquid, there is little pressure until the cavity is completely filled. Thin sections, excellent detail, and good tolerances and finish are all characteristics of the process. In addition, inserts can be incorporated into the products of transfer molding. They are simply positioned within the cavity and maintained in place as the liquid resin is introduced around them.

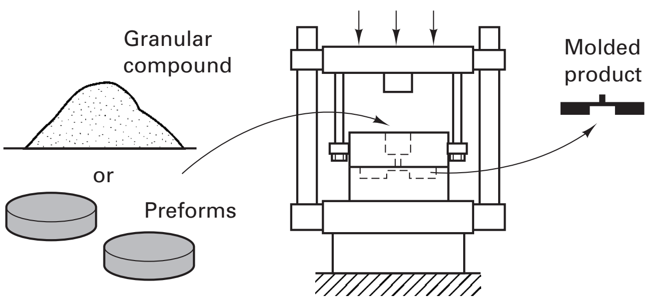

FIGURE 14-4 Diagram of the transfer molding process. Molten or softened material is first formed in the upper heated cavity. A plunger then drives the material into an adjacent die.

Transfer molding is attractive for producing small to medium-sized parts with relatively complex shapes. It combines elements of both compression molding and injection molding (to be discussed), and enables some of the advantages of injection molding to be utilized with thermosetting polymers. The thermosetting resins can be reinforced with fillers, such as cellulose, glass, silica, alumina, or mica, to improve the mechanical or electrical properties and reduce shrinkage or warping. The main limitation of the process is the loss of material. The resin left in the pot or well, sprue, and runners also cures, and must now be discarded. Common products include electrical switchgear and wiring devices, parts of household appliances that require heat resistance, structural parts that require hardness and rigidity under load, under-hood automotive parts, and parts that require good resistance to chemical attack.

COLD MOLDING

In *cold molding*, the uncured thermosetting material is pressed to shape while cold and is then removed from the mold and cured in a separate oven. While the process is faster and more economical, the resulting products generally lack good surface finish and dimensional precision.

INJECTION MOLDING

Injection molding is the most widely used process for the high-volume production of relatively complex thermoplastic parts. Figure 14-5 illustrates one approach to the process, where granules of raw material are fed by gravity from a hopper into a cavity that lies ahead of a moving plunger. As the plunger advances, the material is forced through a preheating chamber and on through a torpedo section, where it is mixed, melted, and superheated. The superheated material is then driven through a nozzle that seats against a mold. Other types of injection units control the flow of material and generate the injection pressure with screws that have both rotation and axial movements, or combinations of screws and plungers. Alternative methods of heating the material include heated barrels and the shearing action as material moves through the screws.

Sprues and runners then channel the molten material into one or more closed-die cavities. Since the dies remain cool, the plastic solidifies almost as soon as the mold is filled. Premature solidification would cause defective parts, so the material must be rapidly forced into the mold cavities by pressures in the range 35 to 140 MPa (5 to 20 ksi), which are maintained during solidification. The mold halves must clamp tightly together during molding and then be easily separated for part ejection. Impact forces should be minimized during die closure, since they can adversely affect die life. Various types of clamping designs have been developed, including toggle, hydraulic, and hydro-mechanical.

Control systems coordinate all of the functions of the process, including the time required for cooling within the mold. By heating the material for the next part as the mold is separating for part ejection, a molding cycle can be completed in 1 to 30 seconds. The process is quite similar to the die casting of molten metal, and the result is usually a finished product needing no further work before assembly or use.

Some injection molding machines incorporate a hot-runner distribution system to transfer the material from the injection nozzle to the mold cavities. If the runners are

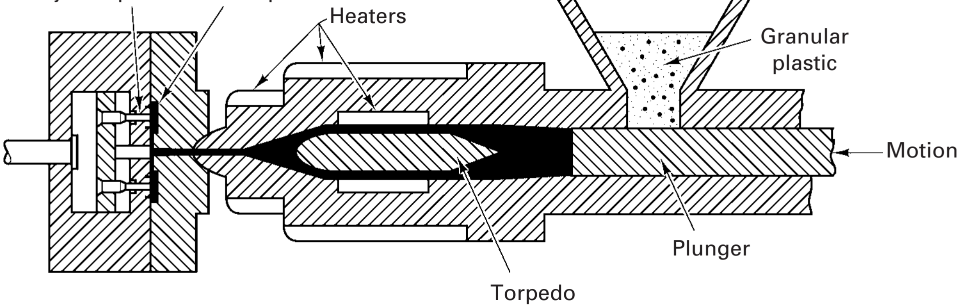

FIGURE 14-5 Schematic diagram of the injection molding process. A moving plunger advances material through a heating region (in this case, through a heated manifold and over a heated torpedo) and further through runners into a mold where the molten thermoplastic cools and solidifies.

cold, the material in the runner solidifies with each cycle and needs to be ejected and reprocessed or disposed of. With hot runners, the thermoplastic material is maintained in a liquid state until it reaches the gate. The material in the runners can be used in the subsequent shot, thereby reducing shot size and cycle time, since less material must be heated. Quality is improved, since all material enters the mold at the same temperature, recycled sprues and runners are not incorporated into the charge, and there is less turbulence since pressurized material is not injected into empty runners. Hot runners do add an additional degree of complexity to the design, operation, and control of the system, so the additional cost must be weighed against the cited benefits.

Injection molding can also be applied to the thermosetting materials, but the process must be modified to provide the temperature, pressure, and time required for curing. The injection chamber is now cold, and the mold is heated. The time in the heated mold must be sufficient to complete the curing process, and the relatively long cycle times are the major deterrent to the injection molding of the thermosets.

REACTION INJECTION MOLDING

Figure 14-6 depicts the *reaction injection molding* process, in which two or more liquid reactants are metered into a unit where they are intimately mixed by the impingement of liquid streams that have been pressurized to a value between 13 and 20 MPa (2000 and 3000 psi). The combined material flows through a pressure-reducing chamber and exits the mixhead directly into a mold. An exothermic chemical reaction takes place between the two components, resulting in thermoset polymerization. Since no heating is required, the production rates are set primarily by the curing time of the polymer, which is often less than 1 minute. Molds are made from steel, aluminum, or nickel shell, with selection being made on the basis of number of parts to be made and the desired quality. The molds are generally clamped in low-tonnage presses.

At present, the dominant materials for reaction injection molding are polyurethanes, polyamides, and composites containing short fibers or flakes. Properties can span a wide range, depending on the combination and percentage of base chemicals and the additives that are used. Different formulations can result in elastomeric or flexible, structural foam (foam core with a hard, solid outer skin), solid (no foam core), or composite products. Part size can range from $\frac{1}{2}$ to 50 kg (1 to 100 lb), shapes can be quite complex (with variable wall thickness), and surface finish is excellent. Automotive applications include steering wheels, airbag covers, instrument panels, door panels, armrests, headliners, and center consoles, as well as body panels, bumpers, and wheel covers. Rigid polyurethanes are also used in such products as computer housings, household refrigerators, water skis, hot-water heaters, and picnic coolers.

From a manufacturing perspective, reaction injection molding has a number of attractive features. The low processing temperatures and low injection pressures make the process attractive for molding large parts, and the large size can often enable parts consolidation. Thermoset parts can generally be fabricated with less energy than the

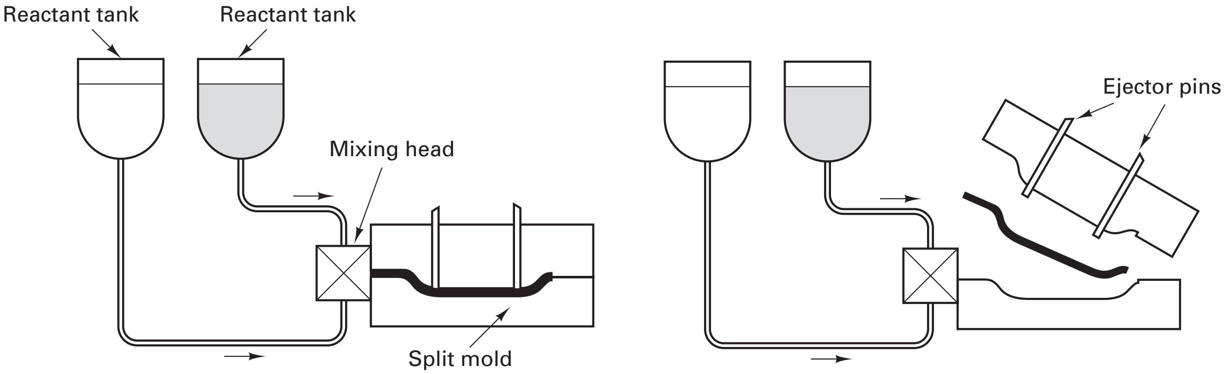

FIGURE 14-6 The reaction injection molding process. (Left) Measured amounts of reactants are combined in the mixing head and injected into the split mold. (Right) After sufficient curing, the mold is opened and the component is ejected.

injection molding of thermoplastics, with similar cycle times and a similar degree of automation. The metering and mixing equipment and related controls tend to be quite sophisticated and costly, but the lower temperatures and pressures enable the use of cheaper molds, which can be quite large.

EXTRUSION

Long plastic products with uniform cross sections can be readily produced by the *extrusion* process depicted in Figure 14-7. Thermoplastic pellets or powders are fed through a hopper into the barrel chamber of a screw extruder. A rotating screw propels the material through a preheating section, where it is heated, homogenized, and compressed, and then forces it through a heated die and onto a conveyor belt. To preserve its newly imparted shape, the material is cooled and hardened by jets of air or sprays of water. It continues to cool as it passes along the belt and is then either cut into lengths or coiled, depending on whether the material is rigid or flexible and on the desires of the customer. The process is continuous and provides a cheap and rapid method of molding. Common production shapes include a wide variety of constant cross-section profiles, such as window and trim molding, as well as tubes, pipes, and even coated wires and cables. Thermoplastic foam shapes can also be produced. If an emerging tube is expanded by air pressure, allowed to cool, and then rolled, the product can be a double layer of sheet or film.

THERMOFORMING

In the *thermoforming* process, thermoplastic sheet material is first heated to a working temperature. The starting material can be either discrete sheets or a continuous roll of material. If continuous material is used, it is usually heated by passing through an oven or other heating device. The material emerges over a male or female mold and is formed by the application of vacuum, pressure, or another mechanical tool. Cooling occurs upon contact with the mold, and the product hardens in its new shape. After sufficient cooling, the part can be removed from the mold and trimmed, and the unused strip material is diverted for recycling.

Figure 14-8 shows the process using a female mold cavity and discrete sheets of material. Here the material is placed directly over the die or pattern and is heated in place. Pressure and/or vacuum is then applied, causing the material to draw into the cavity. The female die imparts both the dimensions and finish or texture to the exterior surface. The sheet material can also be stretched over male form blocks, and here the tooling controls dimensions and finish on the interior surface. Mating male and female dies can also be used. An entire cycle requires only a few minutes.

While the starting material is a uniform-thickness sheet, the thickness of the products will vary as various regions undergo stretching. Typical products tend to be simple-shaped, thin-walled parts, such as plastic luggage, plastic trays, panels for light fixtures, or even pages of Braille text for the blind.

ROTATIONAL MOLDING

Rotational molding can be used to produce hollow, seamless products of a wide variety of sizes and shapes, including storage tanks, bins and refuse containers, doll parts, footballs, helmets, and even boat hulls. The process begins with a closed mold or cavity that

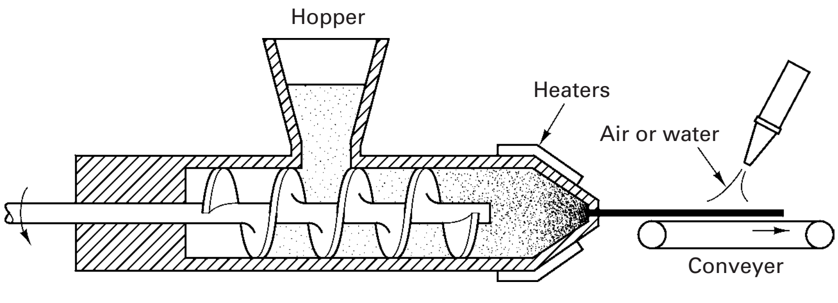

FIGURE 14-7 A screw extruder producing thermoplastic product. Some units may have a changeable die at the exit to permit production of different-shaped parts.

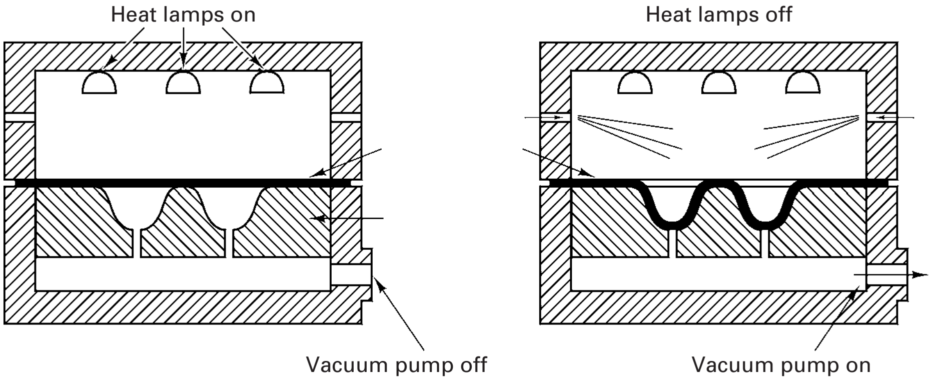

FIGURE 14-8 A type of thermoforming where thermoplastic sheets are shaped using a combination of heat and vacuum.

has been filled with a premeasured amount of thermoplastic powder or liquid. The molds are either preheated or placed in a heated oven and are then rotated simultaneously about two perpendicular axes. Other designs rotate the mold about one axis while tilting or rocking about another. In either case, the resin melts and is distributed in the form of a uniform-thickness coating over all of the surfaces of the mold. The mold is then transferred to a cooling chamber, where the motion is continued and air or water is used to slowly drop the temperature. After the material has solidified, the mold is opened and the uniform-thickness, hollow product is removed. All of the starting material is used in the product; no scrap is generated. The lightweight rotational molds are frequently made from cast aluminum, but sheet metal is often used for larger parts; electroformed or vaporformed nickel is used when fine detail is to be reproduced.

FOAM MOLDING

Foamed plastic products have become an important and widely used form of polymer. In foam molding, a foaming agent is mixed with the plastic resin and releases gas or volatilizes when the material is heated during molding. The materials expand to 2 to 50 times their original size, resulting in products with densities ranging from 32 to 640 g/L (2 to 40 lb/ft^3). *Open-cell foams* have interconnected pores that permit the permeability of gas or liquid. *Closed-cell foams* have the property of being gas- or liquid-tight.

Both rigid and flexible foams have been produced using both thermoplastic and thermosetting materials. The rigid type is useful for structural applications (including housings for computers and business machines), packaging, and shipping containers; as patterns for the full-mold and lost-foam casting processes (see Chapter 12); and for injection into the interiors of thin-skinned metal components, such as aircraft fins and stabilizers. Flexible foams are used primarily for cushioning.

Variations of the conventional molding processes can be used to produce a variety of unusual products. By introducing foaming material into the interior of a mold that has partly filled, parts can be produced with a solid outer skin and a rigid foam core. Figure 14-9 shows the cross section of a plastic gear with this type of dual structure.

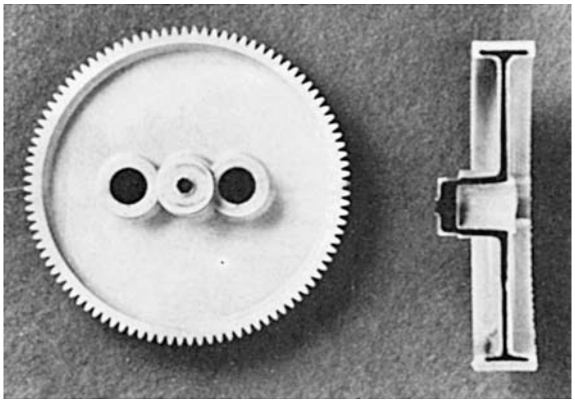

FIGURE 14-9 A plastic gear with a solid outer skin and a rigid foam core. *(From* American Machinist.*)*

OTHER PLASTIC-FORMING PROCESSES

In the *calendering* process, a mass of dough-like thermoplastic is forced between and over two or more counter-rotating rolls to produce thin sheets or films of polymer, which are then cooled to induce hardening. Product thicknesses generally range between 0.3 and 1.0 mm (0.01 to $\frac{1}{16}$ in.) but can be reduced further to as low as 0.05 mm (0.002 in.) by subsequent stretching. Embossed designs can be incorporated into the rolls to produce products with textures or patterns.

Conventional *drawing* can be used to produce fibers, and *rolling* can be performed to change the shape of thermoplastic extrusions. In addition to changing the product dimensions, these processes can also serve to induce crystallization, or produce a preferred orientation to the thermoplastic polymer chains.

Filaments, fibers, and yarns can be produced by *spinning*, a modified form of extrusion. Molten thermoplastic polymer is forced through a die containing many small holes. Where multistrand yarns or cables are desired, the dies can rotate or spin to produce the twists and wraps.

The various plastic-forming processes are often combined in either sequential or integrated forms to produce specific products. For example, the closed-bottom parison for blow molding can be formed as a separate injection molding or as an integrated extrusion operation that is then followed by blow molding. Another example is the manufacture of thin plastic bags, such as those that are used as kitchen or bathroom trash can liners. Polymer granules flow through a hopper and enter the barrel of a screw extruder. As the screw drives the material forward, it is melted and driven through an open-ended metal die that forms a thin-walled plastic tube. Air flows through the center of the die, causing the diameter of the tube to expand substantially as it emerges from the die constraint. Air jets around the circumference of the expanded tube then cool the thin plastic material, after which it is passed through flattening rolls. The flattened tube is then periodically seam welded and perforated, and wound on a roll for easy dispensing.

MACHINING OF PLASTICS

Plastics can be milled, sawed, drilled, and threaded much like metals, but their properties are so variable that it is impossible to give descriptions that would be correct for all. It may be more important to consider some of the general characteristics of plastics that affect their machinability. Since plastics tend to be poor thermal conductors, most of the heat generated during chip formation remains near the cut interface and is not conducted into the material or carried away in the chips. Thermoplastics tend to soften and swell, and they occasionally bind or clog the cutting tool. Considerable elastic flexing can also occur, and this couples with material softening to reduce the precision of final dimensions. Because the thermosetting polymers have higher rigidity and reduced softening, they generally machine to more precise dimensions.

The high temperatures that develop at the point of cutting also cause the tools that are machining plastic to run very hot, and they may fail more rapidly than when cutting metal. Carbide tools may be preferred over high-speed tool steels if the cuts are of moderate duration or if high-speed cutting is performed. Coolants can often be used advantageously if they do not discolor the plastic or induce gumming. Water, soluble oil and water, and weak solutions of sodium silicate have been used effectively.

The tools that are used to machine plastics should be kept sharp at all times. Drilling is best done by means of straight-flute drills or by "dubbing" the cutting edge of a regular twist drill to produce a zero rake angle. These configurations are shown in Figure 14-10.

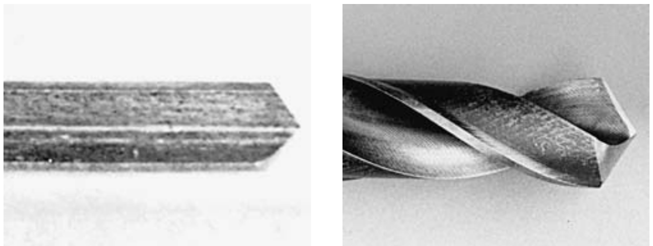

FIGURE 14-10 Straight-flute drill (left) and "dubbed" drill (right) used for drilling plastics.

Rotary files, saws, and milling cutters should be run at high speeds to improve cooling but with the feed carefully adjusted to avoid clogging the cutter.

Laser machining may be an attractive alternative to mechanical cutting. Because it vaporizes the material instead of forming chips, precise cuts can be achieved. Minute holes can be drilled, such as those in the nozzles of aerosol cans. Abrasive materials, such as filled and laminated plastics, can be machined in a manner that also eliminates the fine machining dust that is often considered to be a health hazard.

FINISHING AND ASSEMBLY OPERATIONS

Polymeric materials frequently offer the possibility of integral color, and the as-formed surface is often adequate for final use. Some of the finishing processes that can be applied to plastics include printing, hot stamping, vacuum metallizing, electroplating, and painting. Chapter 36 presents the processes of surface finishing and surface engineering.

Thermoplastic polymers can often be joined by heating the relevant surfaces or regions. The joining heat can be provided by a stream of hot gases, applied through a tool like a soldering iron, or generated by ultrasonic vibrations. The welding techniques that are applied to plastics are presented in Chapter 34. Adhesive bonding, another popular means of joining plastic, is presented in Chapter 35. Because of the low modulus of elasticity, plastics can also be easily flexed, and *snap-fits* are another popular means of assembling plastic components. Because of the softness of some polymeric materials, self-tapping screws can also be used.

DESIGNING FOR FABRICATION

The primary objective of any manufacturing activity is the production of satisfactory components or products, and this involves the selection of an appropriate material or materials. When polymers are selected as the material of construction, it is usually as a result of one or more of their somewhat unique properties, which include light weight, corrosion resistance, good thermal and electrical insulation, ease of fabrication, and the possibility of integral color. While these properties are indeed attractive, one should also be aware of the more common limitations, such as softening or burning at elevated temperatures, poor dimensional stability, and the deterioration of properties with age.

The basic properties and characteristics of polymeric materials have been described in Chapter 8. One should note, however, that property evaluation tests are conducted under specific test conditions. While a standard tensile test may show a polymer to have a moderately high strength value, a reduction in loading rate by two or three orders of magnitude may reduce this strength by as much as 80%. Conversely, an increase in loading rate can double or triple tensile strength. Polymers are often speed-sensitive materials. The can also be extremely sensitive to changes in temperature. Strength values can vary by a factor of 10 over a temperature range of as little as 200°F (100°C). Materials should be selected with full consideration given to the specific conditions of temperature, loads and load rates, and operating environments that will be encountered.

A second area of manufacturing concern is selecting the process or processes to be used in producing the shape and establishing the desired properties. Each of the wide variety of fabrication processes has distinct advantages and limitations, and efforts should be made to utilize their unique features. Once a process has been selected, the production of quality products further requires an awareness of all of the various aspects of that process. For example, consider a molding process in which a liquid or semifluid polymer is introduced into a mold cavity and allowed to harden. The proper amount of material must be introduced and caused to flow in such a way as to completely fill the cavity. Air that originally occupied the cavity needs to be vented and removed. Shrinkage will occur during solidification and/or cooling and may not occur in a uniform manner. Heat transfer must be provided to control the cooling and/or solidification. Finally, a means must be provided for part removal or ejection from the mold. Surface finish and appearance, the resultant engineering properties, and the ultimate cost of production are all dependent on good design and proper execution of the molding process. Product properties can be significantly affected by such factors as melt temperature, direction of flow, pressure during molding, thermal degradation, and cooling rate.

In all molded products, it is important to provide adequate fillets between adjacent sections to ensure smooth flow of the plastic into all sections of the mold and to eliminate stress concentrations at sharp interior corners. These fillets also make the mold less expensive to produce and reduce the danger of mold fracture during use. Even the exterior edges should be rounded where possible. A radius of 0.25 to 0.40 mm (0.010 to 0.015 in.) is scarcely noticeable but will do much to prevent an edge from chipping. Sharp corners should also be avoided in products that will be used for electrical applications, since they tend to increase voltage gradients, which can lead to product failure.

Wall or section thickness is also very important, since the hardening or curing time of a polymer is determined by the thickest section. If possible, sections should be kept nearly uniform in thickness, since nonuniformity can lead to serious warpage and dimensional control problems. As a general rule, one should use the minimum thickness that will provide satisfactory end-use performance. The specific value will be determined primarily by the size of the part and, to some extent, the process and the type of plastic being used. Recommended minimum thicknesses for molded plastics are as follows:

Small parts	1.25 mm (0.050 in.)
Average-sized parts	2.15 mm (0.085 in.)
Large parts	3.20 mm (0.125 in.)

Thick corners should also be avoided because they can lead to gas pockets, undercuring, or cracking. When extra strength is needed in a corner, it can usually be provided by incorporating ribs into the design.

Economical production is also facilitated by appropriate dimensional tolerances. A minimum tolerance of 0.08 mm (0.003 in.) should be allowed in directions that are parallel to the parting line of a mold or contained within a mold segment. In directions that cross a parting surface, a minimum tolerance of 0.25 mm (0.010 in.) is desirable. In both cases, increasing these values by about 50% can simultaneously reduce manufacturing difficulty as well as cost.

Since most molds are reusable, careful attention should also be given to the removal of the part. Rigid metal molds should be designed so that they can be easily opened and closed. A small amount of unidirectional taper should be provided to facilitate part withdrawal. Undercuts should be avoided whenever possible, since they will prevent part removal unless additional mold sections are used. These must move independently of the major segments of the mold, adding to the costs of mold production and maintenance, and slowing the rate of production.

INSERTS

Metal *inserts*, usually of brass or steel, are often incorporated into plastic products to provide enhanced performance or unique features. Since molded threads are difficult to produce, machined threads require additional processing, and both types tend to chip or deform, threaded metal inserts are frequently used when assemblies require considerable strength or when frequent disassembly and reassembly are anticipated. Figure 14-11 depicts one form of threaded insert, along with other types that provide pins or holes for alignment or mounting.

The successful use of inserts requires careful attention to design since they are generally held in place by only a mechanical bond that must resist both rotation and pullout. Knurling or grooving is often required to provide suitable sites for gripping. A medium or coarse knurl is usually adequate to resist torsional loads and moderate axial forces. Circumferential grooves are excellent for axial loads but offer little resistance to torsional rotation. Axial grooves resist rotation but do little to prevent pullout. Other

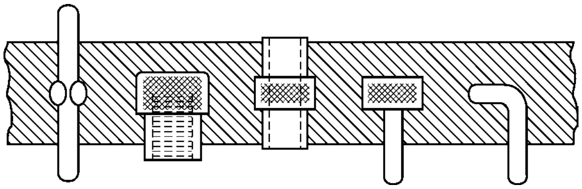

FIGURE 14-11 Typical metal inserts used to provide threaded cavities, holes, and alignment pins in plastic parts.

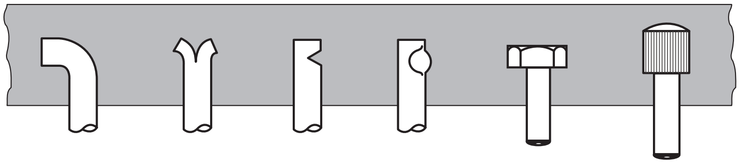

FIGURE 14-12 Various ways of anchoring metal inserts in plastic parts (*left to right*): bending, splitting, notching, swaging, noncircular head, and grooves and shoulders. Knurling is depicted in Figure 14-11.

means of anchoring include bending, splitting, notching, and swaging. Headed parts with noncircular heads may be used as formed. Combinations of notches, grooves, and shoulders are also common. Figure 14-12 depicts some common means of insert attachment.

If an insert is to act as a boss for mounting or serve as an electrical terminal, it should protrude slightly above the surface of the plastic. This permits a firm connection to be made without creating an axial load that would tend to pull the insert from its surroundings. If the insert serves to hold two mating parts together, it should be flush with the surface. In this way, the parts can be held together snugly without danger of loosening the insert. In all cases, the wall thickness of the surrounding plastic must be sufficient to support any load that may be transmitted through the insert. For small inserts, the wall thickness should be at least half the diameter of the insert. For inserts larger than 13 mm ($\frac{1}{2}$ in.) in diameter, the wall thickness should be at least 6.5 mm ($\frac{1}{4}$ in.).

DESIGN FACTORS RELATED TO FINISHING

Because plastics are frequently used where consumer acceptance is of great importance, special attention should be given to finish and appearance. In many cases, plastic parts can be designed to require very little finishing or decorative treatment. For small parts, fins and rough spots can often be removed by a barrel tumbling with suitable abrasives or polishing agents. Smoothing and polishing occur in the same operation.

By etching the surfaces of a mold, decorations or letters can be produced that protrude approximately 0.01 mm (0.004 in.) above the surface of the plastic. When higher relief is required, the mold can be engraved, but this adds significantly to mold cost. Whenever possible, depressed letters or designs should be avoided. These features, when transferred to the mold, become raised above the surrounding surface. Mold making then requires a considerable amount of intricate machining as the surrounding material must be cut away from the design or letters. When recessed features are absolutely required, manufacturing cost can be reduced if they can be incorporated into a small area that is raised above the primary surface.

When designing plastic parts, a prime objective is often the elimination of secondary machining, especially on surfaces that would be exposed to the customer. Even when fillers are used (as they are in most plastics), the surfaces of molded parts have a thin film of pure resin. This film provides the high luster that is characteristic of polymeric products. Machining cuts through the surface, exposing the underlying filler. The result is a poor appearance, as well as a site for the absorption of moisture.

One location that frequently requires machining is the parting line that is produced where the mold segments come together. Since perfect mating is difficult to achieve, a small fin, or "flash," is usually produced around the part perimeter, as illustrated in Figure 14-13. When the flash is trimmed off, the resulting line of exposed filler may be objectionable. By locating the parting line along a sharp corner, it is easier to maintain satisfactory mating of the mold sections, and the exposed filler that is created by flash removal will be confined to a corner, where it is less noticeable.

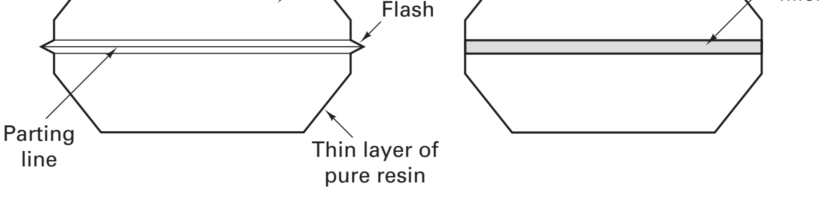

FIGURE 14-13 Trimming the flash from a plastic part ruptures the thin layer of pure resin along the parting line and creates a line of exposed filler.

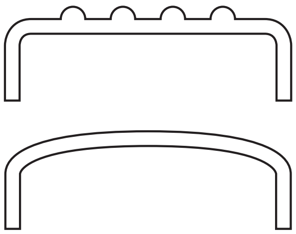

FIGURE 14-14 Stiffness can be imparted to large surfaces of plastic parts through the use of ribbing or doming.

Since plastics have a low modulus of elasticity, large flat areas are not rigid and should be avoided whenever possible. Ribbing or doming, like that illustrated in Figure 14-14, can be used to provide the required stiffness. In addition, flat surfaces tend to reveal flow marks from the molding operation, as well as scratches that occur during handling or service. External ribbing then serves the dual function of increasing strength and rigidity while masking any surface flaws. Dimpled or textured surfaces can also be used to provide a pleasing appearance and conceal scratches.

Holes that are formed by pins protruding from the mold often require special consideration. During the mold closure and filling stages of compression molding, these pins can be subjected to considerable bending. When they are supported only at one end, the length should not exceed twice the diameter. In processes with reduced filling pressures, the length can be as much as five times the diameter without excessive problems.

Holes that are to be threaded or used to receive self-tapping screws should be countersunk. This not only assists in starting the tap or screw but also reduces chipping at the outer edge of the hole. If the threaded hole is less than 6.5 mm ($\frac{1}{4}$ in.) in diameter, it is best to cut the threads after molding, using some form of thread tap. For diameters greater than 6.5 mm, the threads can be molded or an insert should be used. If the threads are molded, however, special provisions must be made to remove the part from the mold. Since the additional operations extend the molding time and reduce productivity, they are generally considered to be uneconomical.

■ 14.3 PROCESSING OF RUBBER AND ELASTOMERS

Rubber and elastomeric products can be produced by a variety of fabrication processes. Relatively thin parts with uniform wall thickness, such as boots, gloves, and fairings, are often made by some form of *dipping*. A master form is first produced, usually from some type of metal. This form is then immersed into a liquid preparation or compound (usually based on natural rubber, neoprene, or silicone), then removed and allowed to dry. With each dip, a certain amount of the liquid adheres to the surface, with repeated dips being used to produce a final desired thickness. After vulcanization, usually in steam, the products are stripped from the molds.

The dipping process can be accelerated by using electrostatic charges. A negative charge is introduced to the latex particles, and the form or mold receives a positive charge, either through an applied voltage or by a coagulant coating that releases positive ions when dipped into the solution. The attraction and neutralization of the opposite charges causes the elastomeric particles to be deposited on the form at a faster rate and in thicker layers than the basic process. With electrostatic deposition, many products can be made in a single immersion.

When the parts are thicker or complex-shaped solids, the first step is the compounding of elastomeric resin, vulcanizers, fillers, antioxidants, accelerators, and pigments. This is usually done in some form of mixer, which blends the components to form a homogeneous mass. Adaptations of the processes previously discussed for plastics are frequently used to produce the desired shapes. Injection, compression, and transfer molding are used, along with special techniques for foaming. Urethanes and silicones can also be directly cast to shape.

Rubber compounds can be made into sheets using *calenders*, like that shown in Figure 14-15. The sheet coming from the calender is often rolled with a fabric liner to prevent the material from sticking. Three- or four-roll calenders can also be used to place a rubber or elastomer covering over cord or woven fabric. In the three-roll geometry, only one side of the fabric is coated in a single pass. The four-roll arrangement, shown in Figure 14-16, enables both sides to be coated simultaneously.

Products such as inner tubes, garden hoses, tubing, and strip moldings can be produced by the *extrusion* process. The compounded elastomer is forced through a die by a screw device similar to that described for plastics.

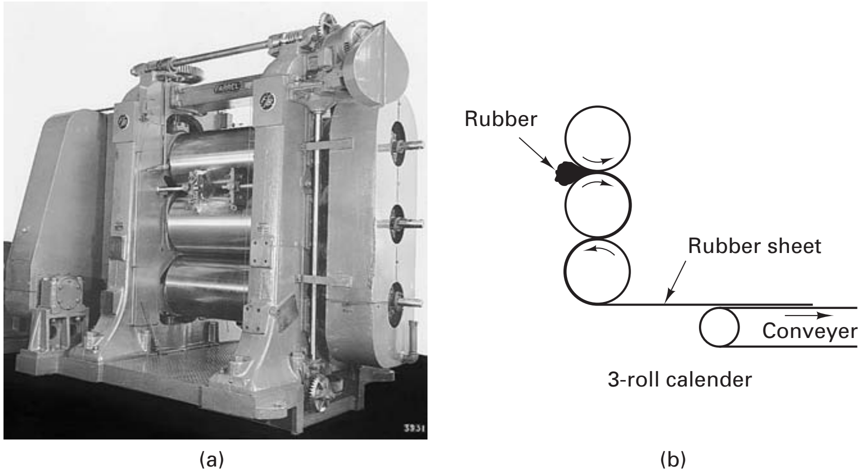

FIGURE 14-15 (a) Three-roll calender used for producing rubber or plastic sheet. (b) Schematic diagram showing the method of making sheets of rubber with a three-roll calender. [*(a) (Courtesy of Farrel-Birmingham Company, Inc. Ansonia, CT.)*]

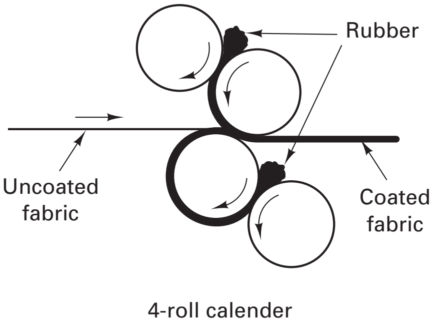

FIGURE 14-16 Arrangement of the rolls, fabric, and coating material for coating both sides of a fabric in a four-roll calender.

Rubber or artificial elastomers can be bonded to metal, such as brass or steel, using a variety of polymeric *adhesives*. Only moderate pressures and temperatures are required to obtain excellent adhesion.

■ 14.4 PROCESSING OF CERAMICS

The fabrication processes applied to ceramic materials generally fall into two distinct classes, based on the properties of the material. *Glasses* can be manufactured into useful articles by first heating the material to produce a molten or viscous state, shaping the material by means of *viscous flow*, and then cooling the material to produce a solid product. *Crystalline ceramics* have a characteristically brittle behavior and are normally manufactured into useful components by pressing moist aggregates or powder into a shape, followed by drying, and then bonding by one of a variety of mechanisms, which include chemical reaction, *vitrification* (cementing with a liquefied material), and *sintering* (solid-state diffusion).

FABRICATION TECHNIQUES FOR GLASSES

Glass is generally shaped at elevated temperatures, where the viscosity can be controlled. A number of the processes begin with material in the liquid or molten condition. Sheet and plate glass is formed by processes such as extruding through a narrow slit, rolling through water-cooled rolls, or floating on a bath of molten tin. Glass shapes can be produced by pouring the molten material directly into a mold. The cooling rate is then controlled, usually as slow as possible, to minimize residual stresses and the tendency for cracking. Constant-cross-section shapes can be made by extrusion, and glass fibers can be produced by forcing liquid glass through multiple openings in an extrusion die.

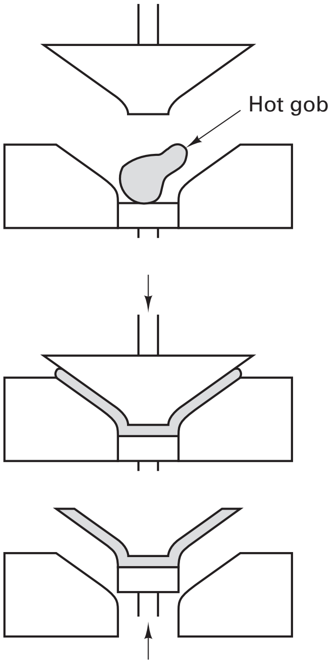

FIGURE 14-17 Viscous glass can be easily shaped by mating male and female die members.

Other glass-forming processes begin with viscous masses and use mating male and female die members to press the material into the desired shape, as illustrated in Figure 14-17. Bottles, containers, and shapes like incandescent light bulbs are made by a process similar to the *blow molding* of plastics. Cup-shaped pieces of viscous material are expanded against the outside of heated dies, as illustrated in Figure 14-18.

Special heat treatments can also be applied to glass material. By applying forced cooling to the exposed surfaces, a residual stress pattern of surface compression can be induced. The surface layers cool and contract, and the softer interior flows to conform. This is followed by the cooling of the interior, which tries to contract but is restrained by the already cold surface, creating the surface compression. The resulting product, called *tempered glass*, is stronger and more fracture resistant, since cracks tend to initiate on free surfaces. When unfavorable residual stresses are present that might lead to cracking, *annealing* treatments can be used to reduce their magnitude.

Glass-ceramics form a unique class of materials that are part crystalline and part glass. They are fabricated into shape as a glass and are then subjected to a special heat treatment (*devitrification*) that controls the nucleation and growth of the crystalline component. Because of the dual structure, the final properties include good strength and toughness, along with low thermal expansion. Typical products include cookware (such as the white CorningWare products), ceramic stove tops, and materials used in electrical and computer components.

FABRICATION OF CRYSTALLINE CERAMICS

Crystalline ceramics are hard, brittle materials with high melting points. As a result, they cannot be formed by techniques requiring either plasticity (i.e., forming methods) or melting (i.e., casting methods). Instead, these materials are generally processed in the solid state by techniques that utilize particles or aggregates and resemble those used in powder metallurgy. The particles can also be blended with additives that impart plasticity or flow and enable the forming or casting processes to be used.

Dry powders can be compacted and converted into useful shapes by pressing at either environmental or elevated temperatures. *Dry pressing* with rigid tooling, *isostatic pressing*, and *hot-isostatic pressing (HIP)* with flexible molds are common techniques and exhibit features and limitations similar to those discussed in Chapter 18.

Clay products are based on special types of ceramics blended with water and various additives to produce a material that can be shaped by most of the traditional forming methods. *Plastic forming* can also be applied to other ceramics if the ceramic particles are combined with additives that impart plasticity when subjected to pressure and heat. *Wet pressing* can be used to produce shapes at lower pressures than dry pressing. *Extrusion* can be used to produce products with constant cross sections.

Injection molding was discussed earlier in this chapter as a means of forming plastics, and metal injection molding (MIM) is presented in Chapter 19 as a way of producing small, complex-shaped metal parts. A form of injection molding can also be used to form complex, three-dimensional shapes from ceramic materials. Ceramic powder is mixed with polymer material, and heated material (125°–150°C or 250°–300°F) is then injected into an aluminum die under pressures on the order of 30–100 MPa (5–15 ksi). The mixture cools, and after about 30 seconds, it is hard enough to permit ejection from the die. Additive materials are then removed by

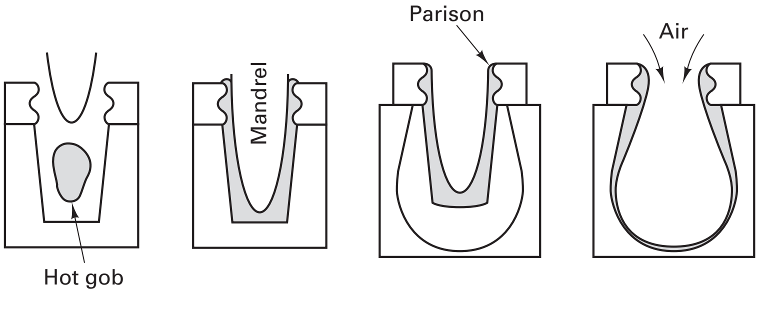

FIGURE 14-18 Thin-walled glass shapes can be produced by a combination of pressing and blow molding.

thermal, solvent, catalytic, or wicking methods, and the remaining ceramic is fused together by a firing operation. As with metal injection molding, the die forms a part that is considerably oversized, and controlled shrinkage during firing produces the final dimensions. The major dimensions of most parts are less than 10 cm (4 in.); the wall thickness is less than 6 mm ($\frac{1}{4}$ in.); and tolerances are on the order of 1% or 0.1 mm (0.005 in.), whichever is greater. Most parts are made from the oxide ceramics, such as alumina or zirconia, but the process has also been used with silicon carbide and silicon nitride.

Several casting processes can be used to produce ceramic shapes, beginning with a pourable slurry that strengthens by partial removal of the liquid or the gellation, polymerization, or crystallization of a matrix phase. In the *slip casting* process, ceramic powder is mixed with a liquid to form a slurry, which is then cast into a mold containing very fine pores. Capillary action pulls the liquid from the slurry, allowing the ceramic particles to arrange into a "green" body with sufficient strength for subsequent handling. Pressure applied to the slurry, vacuum applied to the mold, or centrifugal pressure can all aid in liquid removal. Hollow shapes can be produced by pouring out the remaining slurry once a desired thickness of solid has formed on the mold walls. Slip casting has been used to produce a variety of porcelain products, including bathroom fixtures, fine china and dinnerware, and ceramic products for the chemical industry.

In the *tape casting* process, a controlled film of slurry is formed on a substrate. Evaporation of the liquid during controlled drying produces a thin, flexible, rubbery tape or sheet that has smooth surfaces and uniform thickness. These products are widely used in the multilayer construction of electronic circuits and capacitors.

In other casting-type processes, slurries containing bonding agents can be used to produce cast-in-place products, such as furnace linings or dental fillings. When mixed with a sticky binder, the material can be blown through a pipe to apply ceramic coatings or build up refractory linings.

The numerous variations of *sol-gel processing* can be used to produce ceramic films and coatings, fibers, and bulk shapes. These processes begin with a solution or colloidal dispersion (sol), which undergoes a molecular polymerization to produce a gel, which is then dried. This approach offers higher purity and homogeneity, lower firing temperatures, and finer grain size at the expense of higher raw-material cost, large volume shrinkages during processing, and longer processing times.

Table 14-1 summarizes some of the primary processes used to fabricate shapes from crystalline ceramics.

PRODUCING STRENGTH IN PARTICULATE CERAMICS

Each of the processes just described can be used to produce useful shapes from ceramic materials, but useful strength generally requires a subsequent heating operation, known as *firing* or *sintering*. Slurry-type materials must first be dried in a manner that is designed to control dimensional changes and minimize stresses, distortion, and cracking. The material is then heated to temperatures between 0.5 and 0.8 times the absolute melting point, where diffusion processes act to fuse the

TABLE 14-1 Processes Used to Form Products from Crystalline Ceramics

Process	Starting material	Advantages	Limitations
Dry axial pressing	Dry powder	Low cost; can be automated	Limited cross sections; density gradients
Isostatic processing	Dry powder	Uniform density; variable cross sections; can be automated	Long cycle times; small number of products per cycle
Slip casting	Slurry	Large sizes; complex shapes; low tooling cost	Long cycle times; labor-intensive
Injection molding	Ceramic–plastic blend	Complex cross sections; fast; can be automated; high volume	Binder must be removed; high tool cost
Forming processes (e.g., extrusion)	Ceramic–binder blend	Low cost; variable shapes (such as long lengths)	Binder must be removed; particles oriented by flow
Clay products	Clay, water, and additives	Easily shaped by forming methods; wide range of size and shape	Requires controlled drying

particles together and impart the desired mechanical and physical properties. The temperature and time are selected to control the resulting grain size, pore size, and pore shape. In some firing operations, surface melting (*liquid-phase sintering*) or component reactions (*reaction sintering*) can produce a substantial amount of liquid material (*vitrification*). The liquid then flows to produce a glassy bond between the ceramic particles and either solidifies as a glass or crystallizes.

Cementation is an alternative method of producing strength that does not require elevated temperature. A liquid binder material is used to coat the ceramic particles, and a subsequent chemical reaction converts the liquid to a solid, forming strong, rigid bonds.

Prototypes or small production quantities of ceramic products have been made by the *laser sintering* of ceramic powders. Successive layers of material are fused together by the laser sintering (or laser melting) of thin layers of heat-fusible powder. For ceramic parts, the powder particles are actually coated with a very thin thermoplastic polymer binder. The laser then acts on the polymer coating to produce the bond. After the laser bonding, the parts then undergo conventional debinding and sintering to about 55 to 65% of theoretical density. Isostatic pressing prior to sintering can raise the final density to 90 to 99% of ideal.

MACHINING OF CERAMICS

Most ceramic materials are brittle, and the techniques used to cut metals will generally produce uncontrolled or catastrophic cracks. In addition, ceramics are typically hard materials. Since ceramics are often used as abrasives or coatings on cutting tools, the tools needed to cut them have to be even harder.

Direct production to the desired final shape is clearly the most attractive alternative, but there are times when a material removal operation is necessary. Such machining can be performed before or after the final firing. Before firing, the material tends to be rather weak and fragile. While fracture is always a concern, a more significant consideration might be the dimensional changes that will occur upon subsequent firing. Shrinkage may be as much as 30%, so it may be difficult to achieve or maintain close final tolerances. For this reason, machining before firing, known as *green machining*, is usually rough machining designed to reduce the amount of finishing that will be required after firing.

When machining is performed after firing, the processes are generally ones we might consider to be nonconventional. Grinding, lapping, and polishing with diamond abrasives, drilling with diamond-tipped tooling, cutting with diamond saws, ultrasonic machining, laser and electron-beam machining, water-jet machining, and chemical etching have all been used. When mechanical forces are applied, material support is quite critical (since ceramic materials are almost always brittle). Because of the hardness of the ceramic, the tools must be quite rigid. Selection and use of coolants are also important issues.

Materials producers have developed “machinable” ceramics that lend themselves to precision shaping by more traditional machining operations. It should be noted, however, that these are indeed special materials and not characteristic of ceramics as a whole.

JOINING OF CERAMICS

When we consider joining operations, the unique properties of ceramics once again introduce fabrication limitations. Brittle ceramics cannot be joined by fusion welding or deformation bonding, and threaded assemblies should be avoided whenever possible. Therefore, most joining utilizes some form of adhesive bonding, brazing, diffusion bonding, or special cements. Even with these methods, the stresses that develop on the surfaces can lead to premature failure. As a result, most ceramic products are designed to be monolithic (single-piece) structures rather than multipart assemblies.

DESIGN OF CERAMIC COMPONENTS

Since ceramics are brittle materials, special care should be taken to minimize bending and tensile loading as well as design stress raisers. Sharp corners and edges should be avoided where possible. Outside corners should be chamfered to reduce the possibility of edge chips. Inside corners should have fillets of sufficient radius to minimize crack initiation. Undercuts are difficult to produce and should be avoided. Specifications should generally use the largest possible tolerances, since these can often be met with products in the as-fired condition. Extremely precise dimensions usually require hand grinding, and costs can escalate significantly. In addition, consideration should be given to surface-finish requirements, since grinding, polishing, and lapping operations can increase production cost substantially.

14.5 FABRICATION OF COMPOSITE MATERIALS

As shown in Chapter 8, composite materials can be designed to offer a number of attractive properties. In some market areas, such as aerospace and sporting goods, their acceptance and growth have been phenomenal. Use can only occur, however, if the material can be produced in useful shapes at an acceptable cost and rate of production. Many of the manufacturing processes designed for composites are slow, and some require considerable amounts of hand labor. There is often a large degree of variability between nominally identical products, and inspection and quality control methods are not as well developed as for other materials. While these limitations may be acceptable for certain applications, they often restrict the use of composites for high-volume, mass-produced items. Faster production speeds, increased use of automation, reduced variability, and integrated quality control continue to be important issues in the expanded use of composite materials.

In Chapter 8, composite materials were classified by their basic geometry as particulate, laminar, and fiber-reinforced. Since the fabrication processes are often unique to a specific type of composite, they will also be grouped in the same manner.

FABRICATION OF PARTICULATE COMPOSITES

Particulate composites usually consist of discrete particles dispersed in a ductile, fracture-resistant polymer or metal matrix. Their fabrication, however, rarely requires processes unique to composite materials. Instead, the particles are simply dispersed in the matrix by introduction into a liquid melt or slurry, or by blending the various components as solids, using powder metallurgy methods. Subsequent processing generally follows the conventional methods of casting or forming, or utilizes the various techniques of powder metallurgy. These processes have been presented elsewhere in the text and will not be repeated here.

Reinforcement particles have been successfully blended into the highly viscous slurries of rheocast material, the semisolid mixtures that are viscous when agitated but retain their shape when static. Particle reinforcements have also been produced by spray forming multicomponent feeds.

FABRICATION OF LAMINAR COMPOSITES

Laminar composites include coatings and protective surfaces, claddings, bimetallics, laminates, and a host of other materials. Their production generally involves processes designed to form a high-quality bond between distinct layers of different materials. When the layers are metallic, as in claddings and bimetallics, the composites can be produced by hot or cold *roll bonding*. Sheets of the various materials are passed simultaneously through the rolls of a conventional rolling mill. If the amount of deformation is great enough, surface oxides and contaminants are broken up and dispersed, metal-to-metal contact is established, and the two surfaces become joined by a solid-state bond. U.S. coinage is a common example of a roll-bonded material.

Explosive bonding is another means of joining layers of metal. A sheet of explosive material progressively detonates above the layers to be joined, causing a pressure wave to sweep across the interface. A small open angle is maintained between the two surfaces. As the pressure wave propagates, any surface films are liquefied or scarfed off and are jetted out the open interface. Clean metal surfaces are then forced together at high pressures, forming a solid-state bond with a characteristically wavy configuration at the interface. Large areas, wide plates (too wide to roll bond conveniently), and dissimilar materials with large differences in mechanical properties are attractive candidates for explosive bonding.

Both metallic and nonmetallic materials can be joined by *adhesive bonding*. By gluing the layers of plywood at various orientations, the directional effects of wood grain can be minimized within the plane of the sheet. Later in this chapter, we will discuss the lamination of polymer-matrix composites where each ply is a fiber-reinforced or woven layer. Films of unpolymerized resin are created between the layers. Pressing at elevated temperature cures the resin and completes the bond. In a manner similar to adhesive bonding, layers of metal can be joined by brazing to form laminar composites that can withstand moderately elevated temperatures.

In *sandwich structures*, such as corrugated cardboard or the honeycomb shown in Figure 14-19, thin layers of facing material are bonded, usually by adhesive, to a lightweight filler material. Special fabrication methods may be employed to produce the foam, corrugated, or honeycomb filler.

FABRICATION OF FIBER-REINFORCED COMPOSITES

In the fiber-reinforced composites, the matrix and fiber reinforcement provide a system that offers properties not attainable by the individual components acting alone. The fiber reinforcement produces a significant increase in strength and stiffness, while the matrix functions as a binder, transfers the stresses, and provides protection against abrasion and environmental effects.

A number of processes have been developed to produce and shape the fiber-reinforced composites, with key differences relating to the orientation of the fibers, the length of continuous filaments, and the geometry of the final product. Each process seeks to embed the *fibers* in a selected *matrix* with the proper alignment and spacing necessary to produce the desired properties. Discontinuous fibers can be combined with a matrix to provide either a random or a preferred orientation. Continuous fibers are normally aligned in a unidirectional fashion in rods or tapes, woven into fabric layers, wound around a mandrel, or woven into a three-dimensional shape.

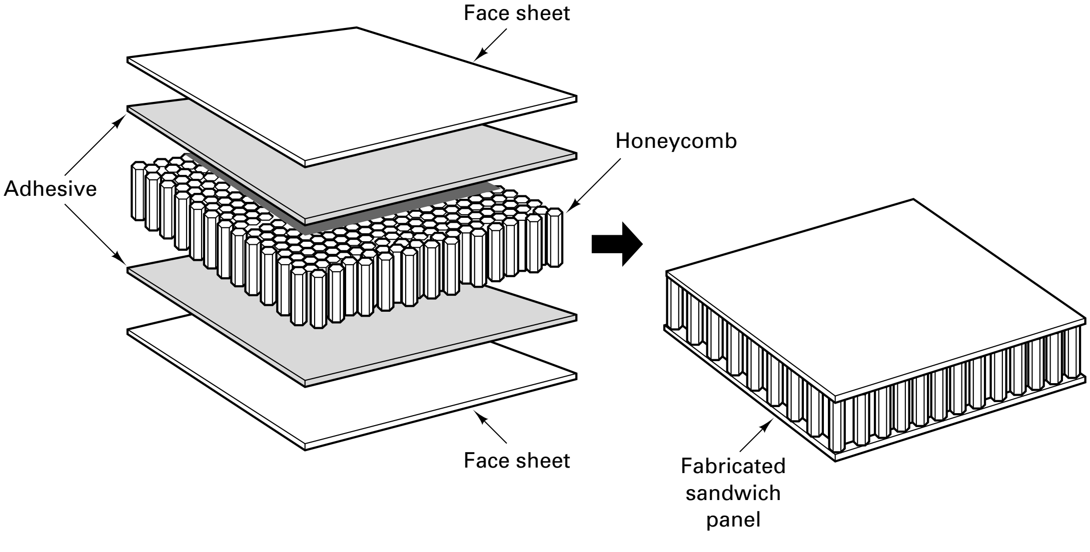

FIGURE 14-19 Fabrication of a honeycomb sandwich structure using adhesive bonding to join the facing sheets to the lightweight honeycomb filler. *(Courtesy of ASM International. Metals Park, OH.)*

Some of the fiber-reinforced processes are identical to those previously described for unreinforced plastics: compression, transfer and injection molding, extrusion, rotational molding, and thermoforming. Others are standard processes with simple modifications, such as reinforced reaction injection molding and resin transfer molding. Still others are specific to fiber-reinforced composites, such as hand lay-up, spray-up, vacuum-bag, pressure-bag, and autoclave molding; filament winding; and pultrusion.

Production of Reinforcing Fibers. A number of processes have been developed to produce the various types of reinforcement fibers used in composites. Metallic fibers, glass fibers, and many polymeric fibers (including the popular Kevlar) are produced by variations of conventional wire drawing and extrusion. Boron, carbon, and ceramic fibers such as silicon carbide are too brittle to be produced by the deformation methods. Boron fibers are produced by chemical vapor deposition around a tungsten filament. Carbon (graphite) fibers can be made by carbonizing (decomposing) an organic material that is more easily formed to the fiber shape.

The individual fine filaments are often bundled into *yarns* (twisted assemblies of filaments), *tows* (untwisted assemblies of fibers), and *rovings* (untwisted assemblies of yarns or tows). Fibers can also be chopped into short lengths, usually 12 mm ($\frac{1}{2}$ in.) or less, for incorporation into the various sheet-or bulk-molding compounds. In these materials the fibers usually assume a random orientation.

Processes Designed to Combine Fibers and a Matrix. A variety of processes have been developed to combine the fiber and the matrix into a unified material suitable for further processing. If the matrix material can be liquefied and the temperature is not harmful to the fibers, casting-type processes can be an attractive means of coating the reinforcement. The pouring of concrete around a steel reinforcing rod is a crude example of this method. In the case of the high-tech, fiber-reinforced plastics and metals, the liquid can be introduced between the fibers by means of *capillary action, vacuum infiltration*, or *pressure casting*. In a modification of *centrifugal casting*, resin is introduced into the center of a rotating mold and is then uniformly forced against and into the reinforcing material. Yet another alternative is to draw the fibers through a bath of molten material and combine them into aligned bundles before the liquid solidifies.

Prepregs, or pre-impregnated reinforcements, are sheets of unidirectional fibers or woven fabric that have been infiltrated with a matrix material. *Mats* are sheets of nonwoven, randomly oriented fibers in a matrix. When the matrix is a polymeric material, the resin in the prepreg or mat is usually only partially cured. Later fabrication then involves the stacking of layers and the application of heat and pressure to further cure the resin and bond the layers into a continuous solid matrix. Prepreg layers can be stacked in various orientations to provide various directional properties.

Individual filaments can be coated with a matrix material by drawing through a molten bath, plasma spraying, vapor deposition, electrodeposition, or other techniques. The coated fibers can then be used, either individually or in various assemblies. They can also be wound around a mandrel with a specified spacing and then cut to produce *tapes* that contain continuous, unidirectionally aligned filaments. These tapes are generally 1 fiber diameter in thickness and can be up to 1.2 m (48 in.) wide.

When the temperatures of the molten matrix become objectionable or potentially damaging to the fiber, matrix-fiber bonding can often be achieved through diffusion or deformation bonding (hot pressing or rolling). A common arrangement is to position aligned or woven fibers between sheets of foil material. Loosely woven fibers can also be infiltrated with a particulate matrix, which is then compacted at high pressures and sintered to form a continuous solid.

Sheet-molding compounds (SMC) are composed of chopped fibers (usually glass in lengths of 25 to 50 mm or 1 to 2 in.) and partially cured thermoset resin, along with fillers, pigments, catalysts, thickeners, and other additives, in sheets approximately 2.5 to 5 mm (0.1 to 0.2 in.) thick. With strengths in the range of 35 to 70 MPa (5 to 10 ksi) and the ability to be press formed in heated dies, these materials offer a feasible alternative to sheet metal in applications where light weight, corrosion resistance, and integral color are attractive features.

After initial compounding and a few days of curing, sheet-molding compounds generally take on the consistency of leather, making them easy to handle and mold. When they are placed in a heated mold, the viscosity is quickly reduced and the material flows easily under pressures of about 7 MPa (1000 psi). The elevated temperatures accelerate the chemical reactions, and final curing can often be completed in less than 60 seconds. As an added benefit, sheet-molding compounds can be easily recycled. One possible disadvantage, however, is that polymer flow may orient the reinforcing fibers, making the final orientation nonrandom and difficult to predict and control.

Bulk-molding compounds (BMC) are fiber-reinforced, thermoset, molding materials, where short fibers (6 to 12 mm or $\frac{1}{4}$ to $\frac{1}{2}$ in.) are distributed in random orientation. The starting material is usually a bulk material with the consistency of putty or modeling clay, although pellets and granules are also possible. The final shape is usually produced by compression molding in heated dies, but transfer molding and injection molding are other possibilities.

Fabrication of Final Shapes from Fiber-Reinforced Composites. A number of processes have been developed for the production of finished products from fiber-reinforced material. Many are simply extensions or adaptations of processes that are used to shape the matrix material (usually metals or polymers). Others are unique to the family of fiber-reinforced composites. The dominant techniques will be discussed individually in the sections that follow.

PULTRUSION *Pultrusion* is a continuous process that is used to produce long lengths of relatively simple shapes with uniform cross section, such as round, rectangular, tubular, plate, sheet, and structural products. As shown in Figure 14-20, bundles of continuous reinforcing fibers are drawn through a bath of thermoset polymer resin, and the impregnated material is then gathered to produce a desired cross-sectional shape. This material is then pulled through one or more heated dies, which further shapes the product and cures the resin. When it emerges from the heated dies, the product is cooled by air or water and then cut to length. Some products, such as structural shapes, are complete at this stage, while others are further fabricated into products such as fishing poles, golf club shafts, and ski poles. Extremely high strengths and stiffnesses are possible since the reinforcement can be as much as 75% of the final structure. Tensile strengths of 210 MPa (30 ksi) and elastic modulus of 17 Gpa (2.5×10^6 psi) are coupled with densities about 20% that of steel or 60% that of aluminum. Cross sections can be as much as 1.5 m (60 in.) wide and 0.3 m (12 in.) thick.

FILAMENT WINDING Resin-coated or resin-impregnated, high-strength, continuous filaments, bundles, or tapes made from fibers of glass, graphite, boron, Kevlar (aramid), or similar materials can be used to produce cylinders, spheres, cones, and other container-type shapes with exceptional strength-to-weight ratios. The filaments are wound over a rotating form or mandrel, using longitudinal, circumferential, or helical patterns, or a combination of these, designed to take advantage of their highly directional strength properties. By adjusting the density of the filaments in various locations and selecting the orientation of the wraps, products can be designed to have strength where needed and lighter weight in less critical regions. After winding, the part and mandrel are placed in an oven for curing, after which the product is stripped

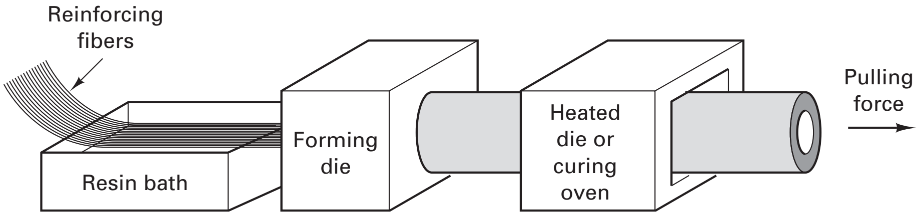

FIGURE 14-20 Schematic diagram of the pultrusion process. The heated dies cure the thermoset resin.

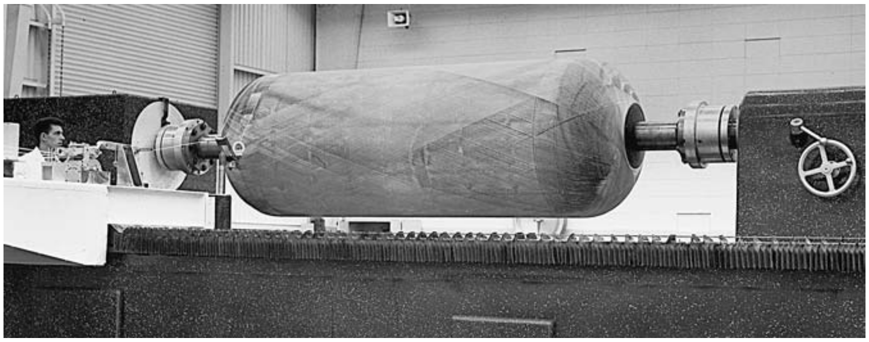

FIGURE 14-21 A large tank being made by filament winding. *(Courtesy of Rohr Inc., Chula Vista, CA.)*

from the form. The matrix, often an epoxy-type polymer, binds the structure together and transmits the stresses to the fibers.

Figure 14-21 shows a large tank being produced by filament winding. Products such as pressure tanks and rocket motor casings can be made in virtually any size, some as large as 4.5 m (15 ft) in diameter and 20 m (65 ft) long. Smaller parts include helicopter rotor blades, baseball bats, and light poles. Moderate production quantities are feasible, and because the process can be highly mechanized, uniform quality can be maintained. A new form block is all that is required to produce a new size or design. Because the tooling is so inexpensive, the process offers tremendous potential for cost savings and flexibility. With advancements in computer software, equipment, and control, parts no longer need to be axisymmetric. Filament-wound products can now be made with changing surfaces, nonsymmetric cross sections, and compound curvatures.

LAMINATION AND LAMINATION-TYPE PROCESSES In the lamination process, prepregs, mats, or tapes are stacked to produce a desired thickness and cured under pressure and heat. The resulting products possess unusually high strength as a result of the integral fiber reinforcement. Because the surface is a thin layer of pure resin, laminates usually possess a smooth, attractive appearance. If the resin is transparent, the fiber material is visible and can impart a variety of decorative effects. Other decorative laminates use a separate patterned face sheet that is bonded to the laminate structure.

Laminated materials can be produced as sheets, tubes, and rods. Flat sheets can be made using the method illustrated in Figure 14-22. Prepreg sheets or reinforcement sheets saturated in resin are stacked and then compressed under pressures on the order of 7 MPa (1000 psi). Figure 14-23 depicts the technique used to produce rods or tubes. For tubing, the impregnated stock is wound around a mandrel of the desired internal diameter. Solid rods are made by using a small-diameter mandrel, which is removed prior to curing, or by wrapping the material tightly about itself. Sheet laminating can also be a continuous process in which multiple reinforcement sheets are passed through a resin bath and then through squeeze rolls.

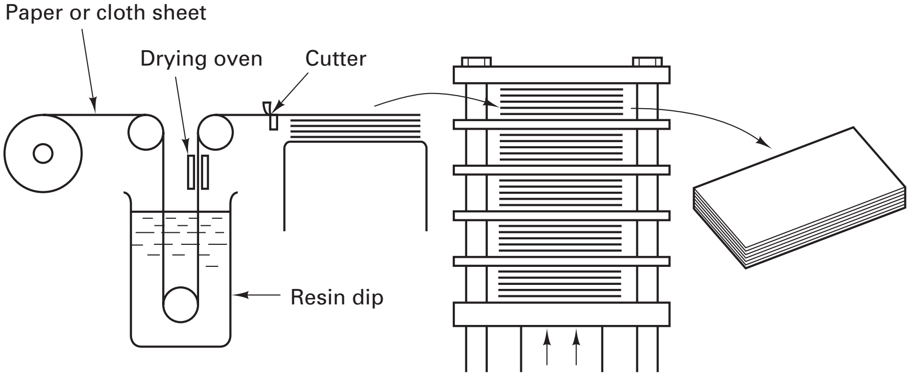

FIGURE 14-22 Method of producing multiple sheets of laminated plastic material.

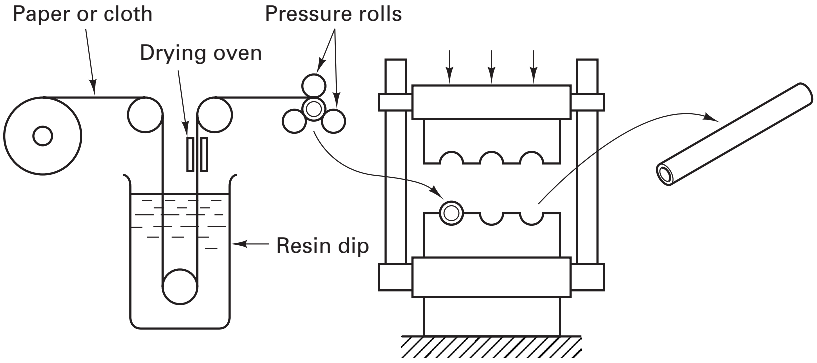

FIGURE 14-23 Method of producing laminated plastic tubing. In the final operation, the rolled tubes are cured by being held in heated tooling.

In all of the above cases, the final operation is curing, usually involving elevated temperature and possibly applied pressure. Because of their excellent strength properties, plastic laminates find a wide variety of uses. Some sheets can be easily blanked and punched. Gears machined from thick laminated sheets have unusually quiet operating characteristics when matched with metal gears.

Many laminated products are not flat but contain relatively simple curves and contours. Manufacturing processes that require zero to moderate pressures and relatively low curing temperatures can be used to produce boat bodies, automobile body panels, aerospace panels, safety helmets, and similar products. The only required tooling is often a female mold or male form block that can be made from metal, hardwood, or even particle board. The layers of prepreg or resin-dipped fabric are stacked in various orientations until the desired thickness is obtained. Care must be taken to avoid the entrapment of air bubbles and ensure that no impurities (such as oil, dirt, or other contaminants) are introduced between the layers. In the *vacuum-bag molding* process, the entire assembly (mold and material) is placed in a nonadhering, flexible bag, and the contained air is evacuated. Air pressure then eliminates entrapped air, expels excess resin, and holds the laminate against the mold while the resin is cured. While curing may occur at room temperature, moderately elevated temperatures may also be used. In *pressure-bag molding*, a flexible membrane is positioned over the female mold cavity and is pressurized to force the individual plies together and drive out entrapped air and excess resin. Pressures usually range from 0.2 to 0.4 MPa (30 to 50 psi) but can be as high as 2 MPa (250 psi). This pressing is coupled with room- or low-temperature curing. Pressure-bag molding has been used to produce extremely large components, such as the skins of military aircraft, large air deflectors for tractor-trailers, and body panels for trucks.

Higher heats and pressures can be used when parts are cured in an *autoclave*. The supporting molds and vacuum-bagged lay-ups are placed inside a heated pressure vessel, where curing occurs under elevated temperatures and pressures in the range 0.4 to 0.7 MPa (50 to 100 psi). Denser, void-free moldings are produced, and the properties can be further enhanced through the use of matrix resins that require higher-temperature cures. The size of the autoclave limits the size of the product.

When production quantities are large and quality needs to be high, matched metal dies can be substituted for the mold and bag. The process then becomes a modification of polymer *compression molding*. Sheet-molding compound, bulk-molding compound, or preformed mat is placed in the press, and heat and pressure are applied. Temperatures typically range from 110° to 160°C (225° to 325°F), coupled with pressures from 1 to 7 MPa (250 to 1000 psi). With heated dies, the thermoset resin cures during the compression operation, with cycles repeating every 1 to 5 minutes.

Resin-transfer molding is a low-pressure process that is intermediate to the slow, labor-intensive lay-up processes and the faster compression molding or injection molding processes, which generally require more expensive tooling. Continuous fiber mat or woven material (usually employing glass fiber) is positioned dry in the bottom half of a matching mold, which is then closed and clamped. A low-viscosity catalyzed resin is then injected into the mold, where it displaces the air, permeates the

FIGURE 14-24 Aerodynamic styling and smooth surfaces characterize the hood and fender of Ford Motor Company's AeroMax truck. This one-piece panel was produced as a resin-transfer molding by Rockwell International. *(Courtesy of ASM International, Metals Park, OH.)*

reinforcement, and subsequently cures at low temperatures. Because of the low pressures employed in the process, the mold tooling does not need to be steel but can be electroformed nickel shells, epoxy composite, or aluminum. In addition, low-capacity presses can be used to clamp the mold segments, and inflatable bags can be used to produce simple holes or hollows, in much the same way that cores are used in conventional casting. The resulting products can have excellent surfaces on both sides, since both mold surfaces can be precoated with a pigmented gel. Large parts can often be made as a single unit with a relatively low capital investment. Cycle times range from a few minutes to a few hours, depending on the part size and the resin system being used. The aerodynamic hood and fender assembly for Ford Motor Company's AeroMax heavy-duty truck (Figure 14-24) is an example of a large resin-transfer molding.

When the quality demands are not as great, the reinforcement-to-resin ratio is not exceptionally high, and only one surface needs to be finished to high quality, the pressing operations can often be eliminated. In a process known as *hand lay-up* or *open-mold processing,* depicted in Figure 14-25, successive layers of pliable resin-coated cloth are simply placed in an open mold or draped over a form. Squeegees or rollers are used to manually ensure good contact and remove any entrapped air, and the assembly is then allowed to cure, generally at room temperature. If prepreg layers are not used, a layer of mat, cloth, or woven roving can be put in place and a layer of resin brushed, sprayed, or poured on. This process can then be repeated to build the desired thickness.

While the hand lay-up process is slow and labor intensive and has part-to-part and operator-to-operator variability, the tooling costs are sufficiently low that single items or small quantities become economically feasible. Molds or forms can be made from wood, plaster, plastics, aluminum, or steel, so design changes and the associated tool modifications are rather inexpensive, and manufacturing lead time can be quite short. In addition, large parts can be produced as single units, significantly reducing

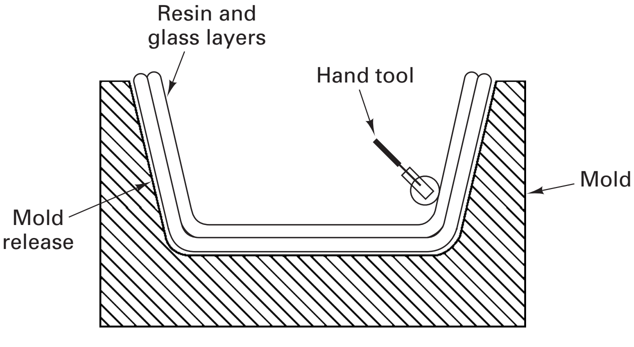

FIGURE 14-25 Schematic of the hand lay-up lamination process.

the amount of assembly, and various types of reinforcement can be incorporated into a single product, expanding design options. High-quality surfaces can be produced by applying a pigmented gel coat to the mold before the lay-up.

SPRAY MOLDING When continuous or woven fibers are not required to produce the desired properties, sheet-type parts can be produced by mixing chopped fibers, fillers, and catalyzed resin and spraying the combination into or onto a mold form, as shown in Figure 14-26. Rollers or squeegees can be used to remove entrapped air and work the resin into the reinforcement. Room-temperature curing is usually preferred, but elevated temperatures are sometimes used to accelerate the cure. As with the hand lay-up process, an initial gel coat can be used to produce a smooth, pigmented surface.

SHEET STAMPING Thermoplastic sheets that have been reinforced with nonwoven fiber can often be heated and press formed in a manner similar to conventional sheet metal forming. Precut blanks are heated and placed between the halves of a matched metal mold that is mounted in a vertical press. Ribs, bosses, and contours can be formed in parts with essentially uniform thickness. Cycle times range from 25 to 50 seconds for most parts.

INJECTION MOLDING The injection molding of fiber-reinforced plastics is a process that competes with metal die castings and offers comparable properties at considerably reduced weight. In its simplest form, chopped or continuous fibers are placed in a mold cavity that is then closed and injected with resin. An improved method utilizes chopped fibers, up to 6 mm ($\frac{1}{4}$ in.) in length, which are premixed with the heated thermoplastic (often nylon) prior to injection. Another variation uses a feedstock of discrete pellets that have been manufactured by slicing continuous-fiber pultruded rods. The benefits of adding fiber reinforcement (compared to conventional plastic molding) include increased rigidity and impact strength, reduced possibility of brittle failure during impact, better dimensional stability at elevated temperatures and in humid environments, improved abrasion resistance, and better surface finish due to the reduced dimensional contraction and absence of related sink marks. The molding process is quite rapid, and the final parts can be both precise and complex.

BRAIDING, THREE-DIMENSIONAL KNITTING, AND THREE-DIMENSIONAL WEAVING The primary causes of failure in lamination-type composites are interlaminar cracking and delamination (layer separation) upon impact. To overcome these problems, the high-strength reinforcing fibers can also be interwoven into three-dimensional preforms by processes that include weaving, braiding, and stitching through the thickness of stacked two-dimensional preforms. Resin is then injected into the assembly, and the resultant product is cured for use. Complex shapes can be produced, with the fiber orientations selected for optimum properties. Computers can be used to design and control the weaving, making the process less expensive than many of the more labor-intensive techniques.

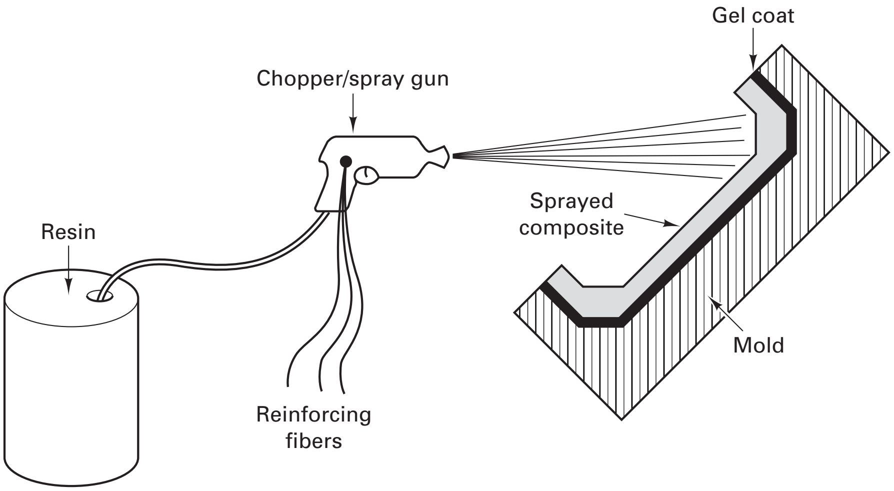

FIGURE 14-26 Schematic diagram of the spray forming of chopped-fiber-reinforced polymeric composite.

Fabrication of Fiber-Reinforced Metal-Matrix Composites. Continuous-fiber *metal-matrix composites* can be produced by variations of filament winding, extrusion, and pultrusion. Fiber-reinforced sheets can be produced by electroplating, plasma spray deposition coating, or vapor deposition of metal onto a fabric or mesh. These sheets are then shaped and bonded, often by some form of hot pressing. Diffusion bonding of foil–fabric sandwiches, roll bonding, and coextrusion are other means of producing fiber-reinforced metal products. Various casting processes have been adapted to place liquid metal around the fibers by means of capillary action, gravity, pressure (die casting and squeeze casting), or vacuum (countergravity casting). Products that incorporate discontinuous fibers can also be produced by powder metallurgy or spray-forming techniques and further fabricated by hot pressing, superplastic forming, forging, or some types of casting. In general, efforts are made to reduce or eliminate the need for finish machining, which would often require the use of diamond or carbide tools, or methods such as electrodischarge machining (EDM).

A critical concern with metal-matrix composites is the possibility of reactions between the reinforcement and the matrix during processing at the high temperatures required to melt and form metals as well as the temperatures of subsequent service. These concerns often limit the kinds of materials that can be combined. Barrier coatings have been employed to isolate reactive fibers.

In terms of properties, graphite-reinforced aluminum has been shown to be twice as stiff as steel and one-third to one-fourth the weight, with practically zero thermal expansion. Aluminum reinforced with silicon carbide exhibits increased strength (tension, compression, and shear at both room and elevated temperature) as well as increased hardness, fatigue strength, and elastic modulus. Thermal creep and thermal expansion are both reduced, but ductility, thermal conductivity, and electrical conductivity are also decreased. Magnesium, copper, and titanium alloys, as well as the superalloys, have also been used as the matrix in fiber-reinforced metal-matrix composites.

Fabrication of Fiber-Reinforced Ceramic-Matrix Composites. Unlike polymeric- or metal-matrix composites, where failures originate in or along the reinforcement fibers, *ceramic-matrix composites* often fail due to flaws in the matrix. If the reinforcement is bonded strongly to the matrix, a matrix crack might propagate right through the fibers. To impart toughness to the assembly, it is often desirable to promote a weak bond between the fiber and matrix. Cracks are redirected along the fiber–matrix interface rather than through the fiber and the remaining matrix.

The matrix materials and reinforcement fibers for ceramic-ceramic composites have been discussed in Chapter 8, along with some of the unique property combinations that can be achieved. Fabrication techniques are often quite different from the other composite families. One approach is to pass the fibers or mats through a slurry mixture that contains the matrix material. The impregnated material is then dried, assembled, and fired. Other techniques include the chemical vapor deposition or chemical vapor infiltration of a coated fiber base, where the coating serves to weaken an otherwise strong bond. Silicon nitride matrices can be formed by reaction bonding. The reinforcing fibers are dispersed in silicon powder, which is then reacted with nitrogen. Hot-pressing techniques can also be used with the various ceramic matrices. When the matrix is a glass, the heated material behaves much like a polymer, and the processing methods are often similar to those used for polymer-matrix composites.

Secondary Processing and Finishing of Fiber-Reinforced Composites. The various fiber-reinforced composites can often be processed further with conventional equipment (sawed, drilled, routed, tapped, threaded, turned, milled, sanded, and sheared), but special considerations should be exercised because composites are not uniform materials. Cutting some materials may be like cutting multilayer cloth, and precautions should be used to prevent the formation of splinters and cracks as well as frayed or delaminated edges. Sharp tools, high speeds, and low feeds are generally required. Cutting debris should be removed quickly to prevent the cutters from becoming clogged.

In addition, many of the reinforcing fibers are extremely abrasive and quickly dull most conventional cutting tools. Diamond or polycrystalline diamond tooling may be required to achieve realistic tool life. Abrasive slurrys can be used in conjunction with rigid tooling to assure the production of smooth surfaces. Lasers and water jets are alternative cutting tools. Lasers, however, can burn or carbonize the material or produce undesirable heat-affected zones. Water jets can create moisture problems with some plastic resins, and pressurized water can cause delaminations, but the low heat and light cutting force are attractive characteristics. Elastic deflections are minimized during the cut. Parts can often be held in place by simple vacuum cups, and water jets also minimize the generation of dust, which may be toxic.

When fiber-reinforced materials must be joined, the major concern is the lack of continuity of the fibers in the joint area. Thermoplastics can be softened and welded by applying pressure with heated tools, combining pressure and ultrasonic vibration, or using pressure and induction heating. Thermoset materials generally require the use of mechanical joints or adhesives, with each method having its characteristic advantages and limitations. Metal-matrix composites are often brazed.

Key Words

adhesive bonding
annealing
autoclave
blow molding
braiding
bulk molding compound
compression molding
calendering
casting
cementation
ceramics
ceramic-matrix composites
clay products
cold molding
composites
compression molding
crystalline ceramics
devitrification
dipping
dry pressing
elastomer
explosive bonding
extrusion
fibers
filament winding
firing
foam molding
glass
glass ceramic
hand lay-up
hot-isostatic pressing
injection molding
inserts
isostatic pressing
lamination
laser sintering
matrix
mats
metal-matrix composites
open-mold processing
parison
plastics
prepregs
pressure-bag molding
pultrusion
reaction injection molding
resin-transfer molding
roll bonding
rotational molding
rovings
sandwich structures
sheet-molding compound
sintering
slip casting
snap-fit
sol-gel processing
spinning
spray molding
tape casting
tapes
tempered glass
thermoforming
thermoplastic polymer
thermosetting polymer
tows
transfer molding
vacuum-bag molding
viscous flow
vitrification
wet processing
yarns

Review Questions

1. Why are the fabrication processes applied to plastics, ceramics, and composites often different from those applied to metals? What are some of the key differences?
2. How does the fabrication of a thermoplastic polymer differ from the processing of a thermosetting polymer?
3. What are some of the ways that plastic sheet, plate, and tubing can be cast?
4. Why do cast plastic resins typically have a lustrous appearance?
5. What types of polymers are most commonly blow molded?
6. Why do blow molding molds typically contain a cooling system?
7. For what types of parts and production volumes would compression molding be an appropriate process?
8. What are typical mold temperatures for compression molding? What is the most common mold material?
9. What are some of the attractive features of the transfer molding process?
10. Cold molding is faster and more economical than other types of molding. What limits its use?
11. What is the most widely used process for the fabrication of thermoplastic materials (in terms of number of parts produced)?
12. In what ways is injection molding of plastic similar to the die casting of metal?
13. What is the benefit of a hot-runner distribution system in plastic injection molding?
14. Why is the cycle time for the injection molding of thermosetting polymers significantly longer than that for the thermoplastics?
15. How are the individual components mixed in the reaction injection molding process?
16. What are some of the attractive consequences of the low temperatures and low pressures of the reaction injection molding process?

17. What are some of the typical production shapes that are produced by the extrusion of plastics?
18. For what types of materials and products might thermoforming be considered attractive?
19. What types of products are produced by rotational molding?
20. What is the difference between open-cell and closed-cell foamed plastics?
21. What are some typical applications for rigid-type foamed plastics?
22. What type of products are produced by the spinning process?
23. What are some of the general properties of plastics that affect their machinability?
24. What are some of the attractive features of laser machining plastic?
25. What property of plastics is responsible for making snap-fit assembly a popular alternative for plastic products?
26. What are some of the attractive properties of plastics that favor their selection? What are some of the common limitations?
27. What are some of the design concerns when specifying and setting up a plastic molding process?
28. Why should adequate fillets be included between adjacent sections of a mold? What is a major benefit of rounding exterior corners?
29. Why is it most desirable to have uniform wall thickness in plastic products?
30. Why are product dimensions less precise when they cross a mold parting line?
31. Why might threaded inserts be preferred over other means of producing threaded holes in a plastic component?
32. What are some of the ways in which metal inserts are held in place in a plastic part?
33. When designing a decorative surface (design or lettering) on a plastic product, why is it desirable that the details be raised on the product rather than depressed?
34. Why does locating a parting line on a sharp corner make that feature less noticeable?
35. What is the benefit of countersinking holes that are to be threaded or used for self-tapping screws?
36. What types of products can be produced from elastomeric materials using the dipping process?
37. What process or equipment is used to form rubber compounds into sheets?
38. What method is generally used to bond elastomers to other materials?
39. What are the two basic classes of ceramic materials, and how does their processing differ?
40. What are some of the most common processes used to shape glass?
41. What are some of the special heat-treatment operations performed on glass products?
42. What are glass-ceramics? How are they produced?
43. What are some of the techniques that can be used to impart some degree of plasticity to crystalline ceramic materials?
44. Describe the differences between the injection molding of plastics and the injection molding of ceramics.
45. What is the difference between slip casting and tape casting?
46. What is the purpose of the firing or sintering operations in the processing of crystalline ceramic products?
47. How does cementation differ from sintering?
48. What are the benefits and limitations of machining ceramic materials before firing versus after firing?
49. What are some of the nonconventional methods used to machine ceramics?
50. Why are joining operations usually avoided when fabricating products from ceramic materials?
51. Discuss some of the design guidelines that relate to the production of parts from ceramic material.
52. Why are the processes used to fabricate particulate composites essentially the same as those used for conventional material?
53. What are some of the processes that can be used to produce a high-quality bond between the layers of a laminar composite?
54. List several fabrication processes for fiber-reinforced products that are essentially the same as for unreinforced plastics. List several that are unique to reinforced materials.
55. What types of materials are used as reinforcing fibers in fiber-reinforced composites?
56. What are some of the forms in which reinforcement fibers appear in composite materials?
57. What is a prepreg?
58. What are sheet-molding compounds (SMCs)? Bulk-molding compounds (BMCs)?
59. In what way is pultrusion similar to wire drawing?
60. What are some typical products that are made by filament winding?
61. What are some of the various molding processes that can be used to shape products from laminated sheets of woven fibers?
62. What are the benefits of using an autoclave instead of room-temperature and low-pressure curing?
63. What form of reinforcing fibers can be incorporated in the spray-molding process? Injection molding?
64. What is the major benefit of three-dimensional fiber reinforcement?
65. Describe some of the ways in which a metal matrix can be introduced into a fiber-reinforced composite.
66. Why might it be desirable to have a weak bond between a reinforcing fiber and a ceramic-matrix material?
67. Discuss some of the techniques used to cut fiber-reinforced composites.
68. What is the major concern when considering the joining of fiber-reinforced composites?

■ Problems

1. Consider some of the more prominent sporting goods that are fabricated from composite materials, such as skis, snowboards, tennis rackets, golf club shafts, bicycle frames, and body panels for racing cars. For two specific products, identify composite materials that are currently being used and the companion shape-producing fabrication methods.
2. Figure 14-A depicts the handles of two large wrenches, a ratchet wrench and a pipe wrench. These components are traditionally forged from ferrous alloy or made from a cast steel or cast iron. For various reasons, alternative materials may be desired. The ratchet wrench is quite long, and reduced weight may be a reasonable desire. Both of these tools could

be used in areas, such as a gas leak, where a nonsparking safety tool would be required. Current specifications for the ratchet handle call for a yield strength in excess of 50 ksi and a minimum of 2% elongation in all directions to ensure prevention of brittle fracture. The pipe wrench most likely has similar requirements.

a. Could a plastic or composite material be used to make a quality product with these additional properties? (*NOTE*: Metal jaw inserts can be used in the pipe wrench, enabling the other components to be considered as separate pieces.)
b. If so, how would you propose to manufacture the new handles?

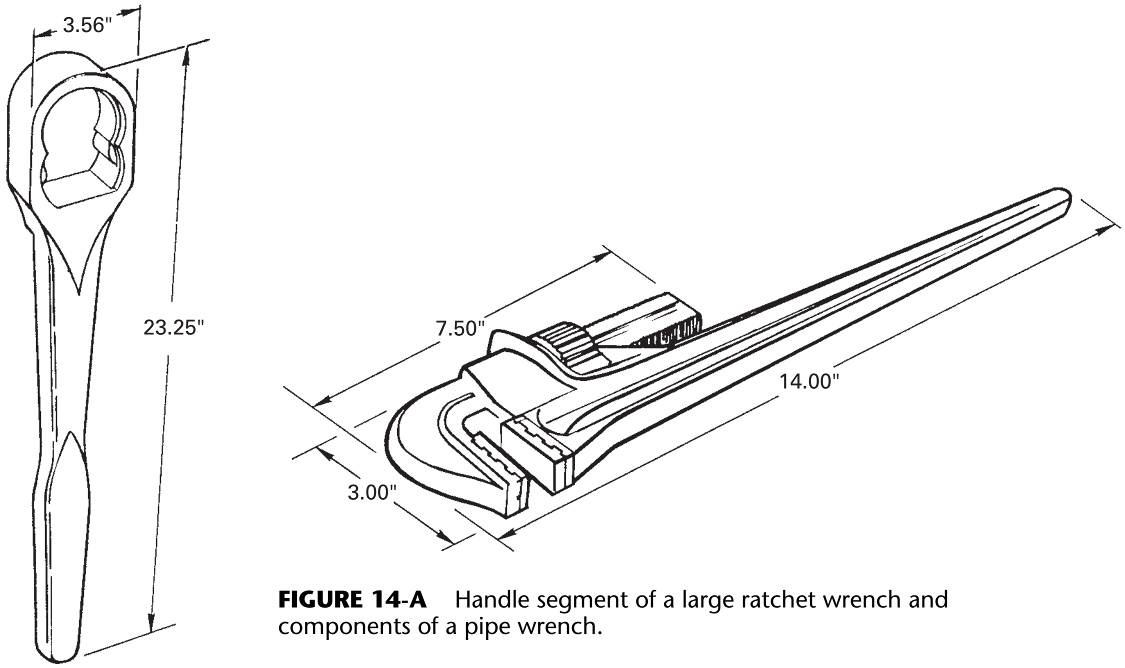

FIGURE 14-A Handle segment of a large ratchet wrench and components of a pipe wrench.

www.wiley.com/college/degarmo

Chapter 14 CASE STUDY

Fabrication of Lavatory Wash Basins

Lavatory wash basins (bathroom sinks) have been successfully made from a variety of engineering materials, including cast iron, steel, stainless steel, ceramics, and polymers (such as melamine). Your company, Diversified Household Products, Inc., is considering a possible entrance into this market and has assigned you the tasks of (1) assessing the competition and (2) recommending the "best" approach toward producing this product.

1. For each of the materials (or families of materials), describe the material properties that are attractive for a wash basin application. What are the primary limitations or disadvantages?
2. For each of the materials (or families of materials), describe possible means of fabricating lavatory wash basins. Consider sheet metal forming, casting, molding, joining, and other types of fabrication processes. If multiple options exist, which one do you consider to be most attractive? Comment on the attractive features of the proposed system (materials and process) as well as the relative quality and cost.
3. Wash basins generally require a surface that is nonporous and stain resistant, scratch resistant, corrosion resistant, and attractive (and possibly available in a variety of colors). One approach to providing these properties on a steel or cast iron substrate is a coating of porcelain enamel. For each of the systems discussed in Question 2, discuss the need for additional surface treatment. What type of treatment would you recommend?
4. Most sinks contain an overflow feature that diverts excess water to the drain at a location beneath the stoppered basin. Discuss how this feature can be incorporated into each of your material–process manufacturing systems.
5. If your company were to consider producing lavatory wash basins on a competitive basis, which of the alternative manufacturing systems (material and manufacturing process) would you recommend? What features make it the most attractive?

CHAPTER 15

FUNDAMENTALS OF METAL FORMING

15.1 INTRODUCTION

Chapters 11 through 14 have already presented a variety of methods for producing a desired shape from an engineering material. Each of those methods had its characteristic set of capabilities, advantages, and limitations. If we are to select the best method to make a given product, however, we must have a reasonable understanding of the entire spectrum of available techniques for shape production and their related features.

The next several chapters will further our study of shape production methods by considering the family of *deformation processes*. These processes have been designed to exploit a remarkable property of some engineering materials (most notably metals) known as *plasticity*, the ability to flow as solids without deterioration of their properties. Since all processing is done in the solid state, there is no need to handle molten material or deal with the complexities of solidification. Since the material is simply moved (or rearranged) to produce the shape, as opposed to cutting away unwanted regions, the amount of waste can be substantially reduced. Unfortunately, the forces required are often high. Machinery and tooling can be quite expensive, and large production quantities may be necessary to justify the approach.

The overall usefulness of metals is largely due to the ease of fabrication into useful shapes. Nearly all metal products undergo metal deformation at some stage of their manufacture. By rolling, cast ingots, strands, and slabs are reduced in size and converted into basic forms such as sheets, rods, and plates. These forms can then undergo further deformation to produce wire or the myriad of finished products formed by processes such as forging, extrusion, sheet metal forming, and others. The deformation may be *bulk flow* in three dimensions, simple *shearing*, simple or compound *bending*, or complex combinations of these. The stresses producing these deformations can be tension, compression, shear, or any of the other varieties included in Table 15-1. Table 15-2 depicts a wide variety of specific processes and identifies the primary state of stress responsible for the deformation. For most of these processes, a wide range of speeds, temperatures, tolerances, surface finishes, and amounts of deformation are possible.

TABLE 15-1 Classification of States of Stress

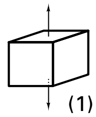 (1)	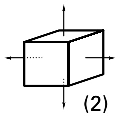 (2)	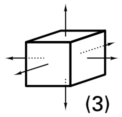 (3)	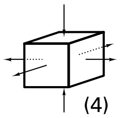 (4)	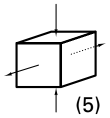 (5)	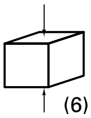 (6)
Simple uniaxial tension	Biaxial tension	Triaxial tension	Biaxial tension, compression	Biaxial tension and compression	Uniaxial compression
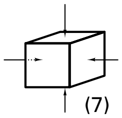 (7)	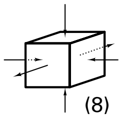 (8)	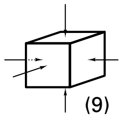 (9)	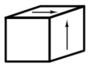 (10)	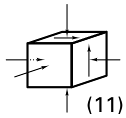 (11)	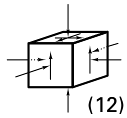 (12)
Biaxial compression	Biaxial compression, tension	Triaxial compression	Pure shear	Simple shear with triaxial compression	Biaxial shear with triaxial compression

15.2 FORMING PROCESSES: INDEPENDENT VARIABLES

Forming processes tend to be *complex systems* consisting of independent variables, dependent variables, and independent–dependent interrelations. *Independent variables* are those aspects of the process over which the engineer or operator has direct control, and they are generally selected or specified when setting up a process. Consider some of the independent variables in a typical forming process:

1. *Starting material*. When specifying the starting material, we may define not only the chemistry of that material but also its condition. In so doing, we define the initial properties and characteristics. These may be chosen entirely for ease of fabrication, or they may be restricted by the desire to achieve the required final properties upon completion of the deformation process.
2. *Starting geometry of the workpiece*. The starting geometry may be dictated by previous processing, or it may be selected from a variety of available shapes. Economic considerations often influence this decision.
3. *Tool or die geometry*. This is an area of major significance and has many aspects, such as the diameter and profile of a rolling mill roll, the bend radius in a sheet-forming operation, the die angle in wire drawing or extrusion, and the cavity details when forging. Since the tooling will induce and control the metal flow as the material goes from starting shape to finished product, success or failure of a process often depends on tool geometry.
4. *Lubrication*. It is not uncommon for friction between the tool and the workpiece to account for more than 50% of the power supplied to a deformation process. Lubricants can also act as coolants, thermal barriers, corrosion inhibitors, and parting compounds. Hence, their selection is an important aspect in the success of a forming operation. Specification includes type of lubricant, amount to be applied, and method of application.
5. *Starting temperature*. Since material properties can vary greatly with temperature, temperature selection and control are often key to the success or failure of a metal-forming operation. Specification of starting temperatures may include the temperatures of both the workpiece and the tooling.
6. *Speed of operation*. Most deformation processing equipment can be operated over a range of speeds. Since speed can directly influence the forces required for deformation (see Figure 2-32), the lubricant effectiveness, and the time available for heat transfer, its selection affects far more than the production rate.
7. *Amount of deformation*. While some processes control this variable through the design of tooling, others, such as rolling, may permit its adjustment at the discretion of the operator.

TABLE 15-2 Classification of Some Forming Operations

Process	Schematic Diagram	State of Stress in Main Part During Forming[a]
Rolling	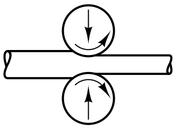	7
Forging	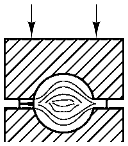	9
Extrusion	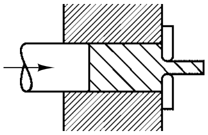	9
Shear spinning	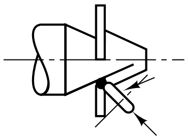	12
Tube spinning	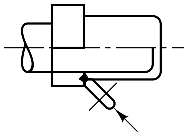	9
Swaging or kneading	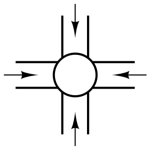	7
Deep drawing	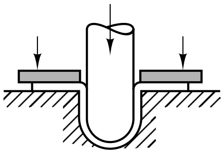	In flange of blank, 5 In wall of cup, 1
Wire and tube drawing	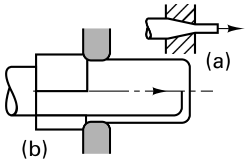	8
Stretching	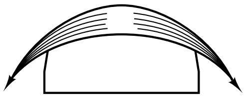	2
Straight bending	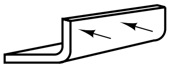	At bend, 2 and 7
Contoured flanging	(a) Convex 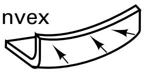	At outer flange, 6 At bend, 2 and 7
	(a) Concave 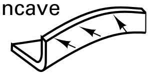	At outer flange, 1 At bend, 2 and 7

[a] Numbers correspond to those in parentheses in Table 15-1.

15.3 DEPENDENT VARIABLES

After specification of the independent variables, the process in turn determines the nature and values of a second set of features. Known as *dependent variables*, these, in essence, are the consequences of the independent variable selection. Examples of dependent variables include:

1. *Force or power requirements*. A certain amount of force or power is required to convert a selected material from a starting shape to a final shape, with a specified lubricant, tooling geometry, speed, and starting temperature. A change in any of the independent variables will result in a change in the force or power required, but the effect is indirect. We cannot directly specify the force or power; we can only specify the independent variables and then experience the consequences of that selection.

   It is extremely important, however, that we be able to predict the forces or powers that will be required for any forming operation. Without a reasonable estimate of forces or power, we would be unable to specify the equipment for the process, select appropriate tool or die materials, compare various die designs or deformation methods, and ultimately optimize the process.
2. *Material properties of the product*. While we can easily specify the properties of the starting material, the combined effects of deformation and the temperatures experienced during forming will certainly change them. The starting properties of the material may be of interest to the manufacturer, but the customer is far more concerned with receiving the desired final shape with the desired final properties. It is important to know, therefore, how the initial properties will be altered by the shape-producing process.
3. *Exit (or final) temperature*. Deformation generates heat within the material. Hot workpieces cool when in contact with colder tooling. Lubricants can break down or decompose when overheated or may react with the workpiece. The properties of an engineering material can be altered by both the mechanical and thermal aspects of a deformation process. Therefore, if we are to control a process and produce quality products, it is important to know and control the temperature of the material throughout the deformation. (*Note:* The fact that temperature may vary from location to location within the product further adds to the complexity of this variable.)
4. *Surface finish and precision*. The surface finish and dimensional precision of the resultant product depend on the specific details of the forming process.
5. *Nature of the material flow*. In deformation processes, dies and tooling generally exert forces or pressures and control the movement of the external surfaces of the workpiece. While the objective of an operation is the production of a desired shape, the internal flow of material may actually be of equal importance. As will be shown later in this chapter, product properties can be significantly affected by the details of material flow, and that flow depends on all the details of a process. Customer satisfaction requires not only the production of a desired geometric shape but also that the shape possess the right set of companion properties, without any surface or internal defects.

15.4 INDEPENDENT–DEPENDENT RELATIONSHIPS

Figure 15-1 serves to illustrate the major problem facing metalforming personnel. On the left side are the *independent variables—those aspects of the process for which control is direct and immediate*. On the right side are the *dependent variables—those aspects for which control is entirely indirect*. Unfortunately, it is the dependent variables that we want to control, but their values are determined by the process, as complex consequences of the independent variable selection. If we want to change a dependent variable, we must determine which independent variable (or combination of independent variables) is to be changed, in what manner, and by how much. To make appropriate decisions, therefore, it is important for us to develop an understanding of the *independent variable–dependent variable interrelations*.

Understanding the links between independent and dependent variables is truly the most important area of knowledge for a person in metalforming. Unfortunately, this

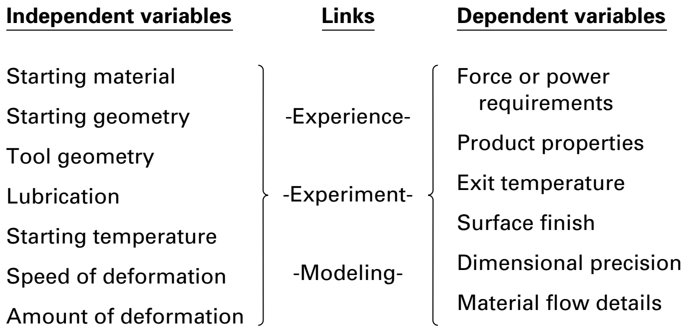

FIGURE 15-1 Schematic representation of a metalforming system showing independent variables, dependent variables, and the various means of linking the two.

knowledge is often difficult to obtain. Metalforming processes are complex systems composed of the material being deformed, the tooling performing the deformation, lubrication at surfaces and interfaces, and various other process parameters such as temperature and speed. The number of different forming processes (and variations thereof) is quite large. In addition, different materials often behave differently in the same process, and there are multitudes of available lubricants. Some processes are sufficiently complex that they may have 15 or more interacting independent variables.

We can gain information on the interdependencies of independent and dependent variables in three distinct ways:

1. *Experience.* Unfortunately, this generally requires long-time exposure to a process and is often limited to the specific materials, equipment, and products encountered during past contact. Younger employees may not have the experience necessary to solve production problems. Moreover, a single change in an area such as material, temperature, speed, or lubricant may make the bulk of past experience irrelevant.
2. *Experiment*. While possibly the least likely to be in error, direct experiment can be both time consuming and costly. Size and speed of deformation are often reduced when conducting laboratory studies. Unfortunately, lubricant performance and heat transfer behave differently at different speeds and sizes, and their effects are generally altered. The most valid experiment, therefore, is one conducted under full-size and full-speed production conditions—generally too costly to consider to any great degree. While laboratory experiments can provide valuable insight, caution should be exercised when extrapolating lab-scale results to more realistic production conditions.
3. *Process modeling*. Here one approaches the process through high-speed computing and one or more mathematical models. Numerical values are selected for the various independent variables, and the models are used to compute predictions for the dependent outcomes. Most techniques rely on the applied theory of plasticity with various simplifying assumptions. Alternatives vary from crude, first-order approximations to sophisticated, computer-based methods, such as finite element analysis. Various models may incorporate strain hardening, thermal softening, heat transfer, and other phenomena. Solutions may be algebraic relations that describe the process and reveal trends and relations between the variables or simply numerical values based on the specific input features.

15.5 PROCESS MODELING

Metalforming simulations using the finite element modeling method became common in the 1980s but generally required high-power minicomputers or engineering workstations. By the mid-1990s, the rapid increase in computing power made it possible to model complex processes on desktop personal computers. With the continued expansion of computing power and speed, process simulations are now quick, inexpensive, and quite accurate. As a result, modeling is being used in all areas of manufacturing, including part design, manufacturing process design, heat-treatment and surface-treatment optimization, and others. Models can predict how a material will respond to a rolling process, fill a forging die, flow through an extrusion die, or solidify in a casting.

Entire heat treatments can be simulated, including cooling rates in various quenchants. Models can even predict the strain distribution, residual stresses, microstructure, and final properties at all locations within a product.

Advanced simulation techniques can provide a clear and thorough understanding of a process, eliminating costly trial-and-error development cycles. Product design and manufacturing methods can be optimized for quality and reliability, while reducing production costs and minimizing lead times. When coupled with appropriate sensors, the same models can be used to determine the type of adjustments needed to provide online process control. Process models can also serve as laboratory tools to explore new ideas or new products. New employees can become familiar with what works and what doesn't in a quick and inexpensive manner.

It is important to note, however, that the accuracy of any model can be no better than that of the input variables. For example, when modeling a metalforming operation, the mechanical properties of the deforming material (i.e., yield strength, ductility, etc.) must be known for the specific conditions of temperature, strain (amount of prior deformation), and strain rate (speed of deformation) being considered. The mathematical descriptions of material behavior as a function of the process conditions are known as constitutive relations. The development of such relationships is not an easy task, however, because the same material may respond differently to the same conditions if its microstructure is different. A 1040 steel that has been annealed (ferrite and pearlite) will not have the same properties as a quenched-and-tempered (tempered martensite) steel of the same chemistry. Microstructure and its effects on properties are difficult to describe in quantitative terms that can be input to a model.

Another rather elusive variable is the friction between the tool and the workpiece. Studies have shown that friction depends on contact pressure, contact area, surface finish, lubricant, speed, and the mechanical properties of the two contacting materials. We know that these parameters often vary from location to location and also change with time during a process, but many models tend to describe friction with a single variable of constant magnitude. Any variations with time and location are simply ignored in favor of mathematical simplicity or because of a lack of any better information.

At first glance, problems such as those just discussed appear to be a significant barrier to the use of mathematical models. It should be noted, however, that the same difficulties apply to the person trying to document, characterize, and extrapolate the results of experience or experiments. Process modeling often reveals features that might otherwise go unnoticed and can be quite useful when attempting to prevent or eliminate defects, optimize performance, or extend a process into a previously unknown area.

■ 15.6 GENERAL PARAMETERS

While much metalforming knowledge is specific to a given process, there are certain features that are common to all processes, and these will be presented here.

It is extremely important to characterize the *material being deformed*. What is its strength or resistance to deformation at the relevant conditions of temperature, speed of deformation, and amount of prior straining? What are the formability limits and conditions of anticipated fracture? What is the effect of temperature or variations in temperature? To what extent does the material strain-harden? What are the recrystallization kinetics? Will the material react with various environments or lubricants? These and many other questions must be answered to assess the suitability of a material to a given deformation process. Since the properties of engineering materials vary widely, the details will not be presented at this time. The reader is referred to the various chapters on engineering materials as well as the more in-depth references cited in Chapter 9 and the reference appendix.

Another general parameter is the *speed of deformation* and the various related effects. Some rate-sensitive materials may shatter or crack if impacted but will deform plastically when subjected to slow-speed loadings. Other materials appear to be stronger when deformed at higher speeds. For these *speed-sensitive materials*, more energy is needed to produce the same result if we wish to do it faster, and stronger tools may be required. Mechanical data obtained from slow strain rates in tensile tests may be totally useless if the deformation process operates at a significantly greater rate of deformation. Speed sensitivity is also greatest when the material is at elevated temperature, a condition that is frequently encountered in metalforming operations. The selection of hammer or press for the hot forging of a small product may well depend on the speed sensitivity of the material being forged.

In addition to the changes in mechanical properties, faster deformation speeds tend to promote improved lubricant efficiency. Faster speeds also reduce the time for heat transfer and cooling. During hot working, workpieces stay hotter and less heat is transferred to the tools.

Other general parameters include *friction and lubrication* and *temperature*. Both of these are of sufficient importance that they will be discussed in some detail.

15.7 FRICTION AND LUBRICATION UNDER METALWORKING CONDITIONS

High forces or high pressures are applied through tools to induce the deformation of a material. Because of the relative motion between the workpiece and the tool, an important consideration in metal deformation processes is the friction that exists at this interface. For some processes, more than 50% of the input energy is spent in overcoming friction. Changes in lubrication can alter the mode of material flow during forming, create or eliminate defects, alter the surface finish and dimensional precision of the product, and modify product properties. Production rates, tool design, tool wear, and process optimization all depend on the ability to determine and control friction between the tool and workpiece.

In most cases, we want to economically reduce the effects of friction. However, some deformation processes, such as rolling, can only operate when sufficient friction is present. Regardless of the process, friction effects are hard to measure. As previously noted, the specific friction conditions depend on a number of variables, including contact area, contact pressure, surface finish, speed, lubricant, and temperature. Because of the many variables, the effects of friction are extremely difficult to scale down for laboratory testing, or extrapolate from laboratory tests to production conditions.

It should be noted that friction under metalworking conditions is significantly different from the friction encountered in most mechanical devices. The friction conditions of gears, bearings, journals, and similar components generally involve (1) two surfaces of similar material and similar strength, (2) experiencing elastic loads such that neither body undergoes permanent change in shape, (3) with wear-in cycles that produce surface compatibility, and (4) low to moderate operating temperatures. Metalforming operations, on the other hand, involve a hard, nondeforming tool interacting with a soft workpiece at pressures sufficient to cause plastic flow in the weaker material. Only a single pass is involved as the tool and workpiece interact, the workpiece is often at elevated temperature, and the contact area is frequently changing as the workpiece deforms.

Figure 15-2 shows a typical relationship between frictional resistance and contact pressure. For light, elastic loads, friction is directly proportional to the applied pressure, with

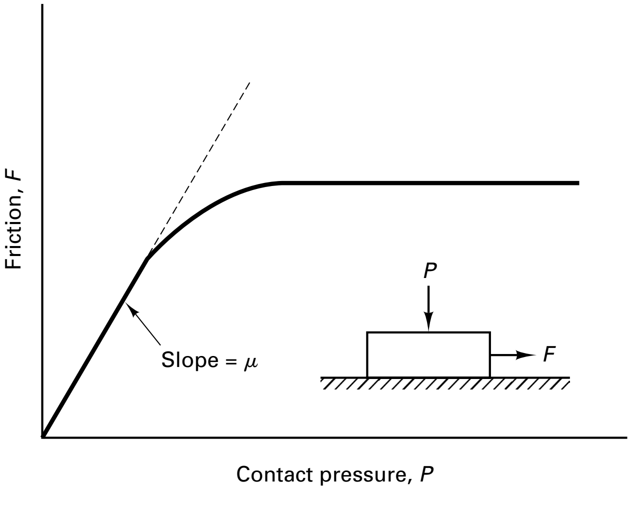

FIGURE 15-2 The effect of contact pressure on the frictional resistance between two surfaces.

the proportionality constant, μ, being known as the *coefficient of friction* or, more specifically, the Coulomb coefficient of friction. At high pressures, friction becomes independent of contact pressure and is more closely related to the strength of the weaker material.

An understanding of these results can be obtained from modern friction theory, whose primary premise is that "flat surfaces are not flat" but have some degree of roughness. When two irregular surfaces interact, sufficient contact is established to support the applied load. At the lightest of loads, only three points of contact may be necessary to support a plane. As the load is increased, the contacting points deform and the contact area increases, initially in a linear fashion. As the load continues to increase, more area comes into contact. Finally, at some high value of load, there is full contact between the surfaces. Additional loads can no longer bring additional areas into contact, and friction can now be described by a constant, independent of pressure.

Friction is the resistance to sliding along an interface. From a mechanistic viewpoint, this resistance can be attributed to (1) abrasion, the force necessary to plow the peaks of a harder material through a softer one, and/or (2) *adhesion*, the force necessary to rip apart microscopic weldments that form between the two materials. Since the weldment tears generally occur in the weaker of the two materials, it is reasonable to assume that the resistance attributed to both features would be proportional to the strength of the weaker material and also to the actual area of metal-to-metal contact. Thus, the curve depicted in Figure 15-2 could also be viewed as a plot of actual contact area at the interface versus contact pressure. Unfortunately, Figure 15-2, and the associated theory, applies only to unlubricated metal-to-metal contact. The addition of a lubricant, as well as any variation in its type or amount, can significantly alter the frictional response.

Surface deterioration or wear is another phenomenon that is directly related to friction. Since the workpiece only interacts with the tooling during a single forming operation, any wear experienced by the workpiece is usually not objectionable. In fact, a shiny, fresh-metal surface produced by wear is often viewed as desirable. Manufacturers whose processes retain most or all of the original dull finish may be accused of selling old or substandard products. Wear on the tooling, however, is quite the reverse. Tooling is expensive and it is expected to shape many workpieces. Tooling wear will generally result in change of workpiece dimensions. Tolerance control will be lost, and at some point the tools will have to be replaced. Other consequences of tool wear include increased frictional resistance (increased required power and decreased process efficiency), poor surface finish on the product, and loss of production during tool changes.

Lubrication is a key to success in many metalforming operations. While lubricants are generally selected for their ability to reduce friction and suppress tool wear, secondary considerations may include the ability to act as a thermal barrier, keeping heat in the workpiece and away from the tooling; the ability to act as a coolant, removing heat from the tools; and the ability to retard corrosion if left on the formed product. Other influencing factors include ease of application and removal; lack of toxicity, odor, and flammability; reactivity or lack of reactivity with material surfaces; adaptability over a useful range of pressure, temperature, and velocity; surface wetting characteristics; cost; availability; and the ability to flow or thin and still function as a lubricant. Lubricant selection is further complicated by the fact that lubricant performance may change with any change in the interface conditions. The exact response is often dependent on such factors as the finish of both surfaces, the area of contact, the applied load, the speed, the temperature, and the amount of lubricant.

The ability to select an appropriate lubricant can be a critical factor in determining whether a process is successful or unsuccessful, efficient or inefficient. For example, if a lubricant layer can prevent mechanical contact between the tool and the workpiece (full-fluid or solid layer separation), the forces and power required may decrease by as much as 30 to 40%, and tool wear becomes almost nonexistent. Considerable effort, therefore, has been directed to the study of friction and lubrication, a subject known as *tribology*, as it applies to both general metalworking conditions and specific metalforming processes. A substantial information base has been developed that can aid in optimizing the use of lubricants in metalworking.

■ 15.8 TEMPERATURE CONCERNS

In metalworking operations, workpiece temperature can be one of the most important process variables. The role of temperature in altering the properties of a material has been discussed in Chapter 2. In general, an increase in temperature brings about a decrease in strength, an increase in ductility, and a decrease in the rate of strain hardening—all effects that would tend to promote ease of deformation.

Forming processes tend to be classified as hot working, cold working, or warm working based on both the temperature and the material being formed. In hot working, the deformation is performed under conditions of temperature and strain rate where recrystallization occurs simultaneously with the deformation. To achieve this, the temperature of deformation is usually in excess of 0.6 times the melting point of the material on an absolute temperature scale (Kelvin or Rankine). Cold working is deformation under conditions where the recovery processes are not active. Here the working temperatures are usually less than 0.3 times the workpiece melting temperature. Warm working is deformation under the conditions of transition (i.e., a working temperature between 0.3 and 0.6 times the melting point).

HOT WORKING

Hot working is defined as the plastic deformation of metals at a temperature above the recrystallization temperature. It is important to note, however, that the recrystallization temperature varies greatly with different materials. Tin is near hot-working conditions at room temperature, steels require temperatures near 2000°F, and tungsten does not enter the hot-working regime until about 4000°F. Thus the term *hot working* does not necessarily correlate with high or elevated temperature, although such is usually the case.

As shown in Figures 2-30 and 2-31, elevated temperatures bring about a decrease in the yield strength of a metal and an increase in ductility. At the temperatures of hot working, recrystallization eliminates the effects of strain hardening, so there is no significant increase in yield strength or hardness, or corresponding decrease in ductility. The true stress–true strain curve is essentially flat once we exceed the yield point, and deformation can be used to drastically alter the shape of a metal without fear of fracture and without the requirement of excessively high forces. In addition, the elevated temperatures promote diffusion that can remove or reduce chemical inhomogeneities, pores can be welded shut or reduced in size during the deformation, and the metallurgical structure can often be altered through recrystallization to improve the final properties. An added benefit is observed for steels, where hot working involves the deformation of the weak, ductile, face-centered-cubic austenite structure, which then cools and transforms to the stronger body-centered-cubic ferrite or much stronger nonequilibrium structures, such as martensite.

From a negative perspective, the high temperatures of hot working may promote undesirable reactions between the metal and its surroundings. Tolerances are poorer due to thermal contractions, and warping or distortion can occur due to nonuniform cooling. The metallurgical structure may also be nonuniform, since the final grain size depends on the amount of deformation, the temperature of the last deformation/recrystallization, the cooling history after the deformation, and other factors, all of which may vary throughout a workpiece.

While recrystallization sets the minimum temperature for hot working, the upper limit for hot working is usually determined by factors such as excess oxidation, grain growth, or undesirable phase transformations. To keep the forming forces as low as possible and enable hot deformation to be performed for a reasonable amount of time, the starting temperature of the workpiece is usually set at or near the highest temperature for hot working.

Structure and Property Modification by Hot Working. When metals solidify into the large sections that are typical of ingots or continuously cast slabs or strands, coarse structures tend to form with a certain amount of chemical segregation. The size of the

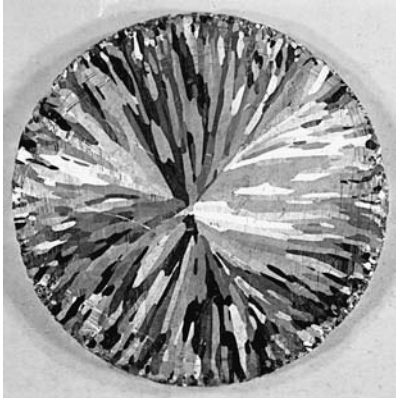

FIGURE 15-3 Cross section of a 4-in.-diameter cast copper bar polished and etched to show the as-cast grain structure.

grains is usually not uniform, and undesirable grain shapes can be quite common, such as the columnar grains that have been revealed in Figure 15-3. Small gas cavities or shrinkage porosity can also form during solidification.

If a cast metal is reheated without prior deformation, it will simply experience grain growth and the accompanying deterioration in engineering properties. However, if the metal experiences a sufficient amount of deformation, the distorted structure will be rapidly replaced by new strain-free grains. This *recrystallization* is then followed by either (1) grain growth, (2) additional deformation and recrystallization, or (3) a drop in temperature that will terminate diffusion and "freeze in" the recrystallized structure. The structure in the final product is that formed by the last recrystallization and the thermal history that follows. By replacing the initial structure with a new one consisting of fine, spherical-shaped grains, it is possible to produce an increase not only in strength but also in ductility and toughness—a somewhat universal enhancement of properties.

Engineering properties can also be improved through the reorientation of inclusions or impurity particles that are present in the metal. With normal melting and cooling, many impurities tend to locate along grain boundary interfaces. If these are unfavorably oriented or intersect surfaces, they can initiate a crack or assist its propagation through a metal. When a metal is plastically deformed, the impurities tend to flow along with the base metal or fracture into rows of fragments (*stringers*) that are aligned in the direction of working. These nonmetallic impurities do not recrystallize with the base metal but retain their distorted shape and orientation. The product exhibits a *flow structure*, like the one shown in Figure 15-4, and final properties tend to exhibit directional variation. Through proper design of the deformation, impurities can often be reoriented into a "crack-arrestor" configuration where they are perpendicular to the direction of crack propagation. The outer lobe of the forging in Figure 15-4, for example, has excellent fracture resistance since all flow lines are parallel to the external surfaces. The impurities appear as crack initiators or crack propagators only at the top and bottom of the inner lobe, which hopefully are low-stress or noncritical locations.

Figure 15-5 schematically compares a machined thread and a rolled thread in a threaded fastener. If the axial defects in the starting wire or rod are reoriented to be parallel to the thread profile, the rolled thread offers improved strength and fracture resistance.

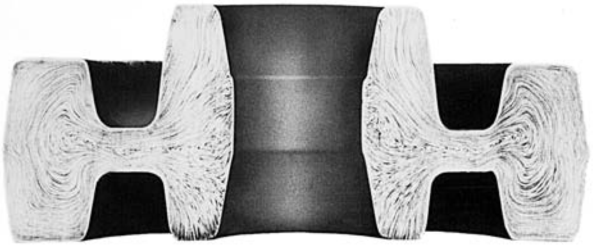

FIGURE 15-4 Flow structure of a hot-forged gear blank. Note how flow is parallel to all critical surfaces. *(Courtesy of Bethlehem Steel Corporation, Bethlehem, PA.)*

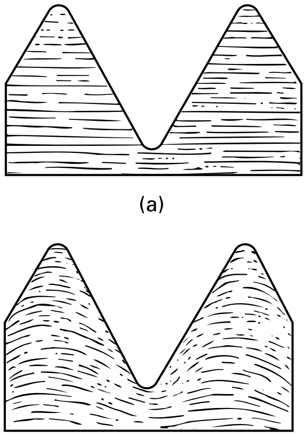

FIGURE 15-5 Schematic comparison of the grain flow in a machined thread (a) and a rolled thread (b). The rolling operation further deforms the axial structure produced by the previous wire- or rod-forming operations, while machining simply cuts through it.

Temperature Variations. The success or failure of a hot deformation process often depends on the ability to control the temperatures within the workpiece. Over 90% of the energy imparted to a deforming workpiece will be converted into heat. If the deformation process is sufficiently rapid, the temperature of the workpiece may actually increase. More common, however, is the cooling of the workpiece in its lower-temperature environment. Heat is lost through the workpiece surfaces, with the majority of the loss occurring where the workpiece is in direct contact with lower-temperature tooling. Nonuniform temperatures are produced, and flow of the hotter, weaker, interior may well result in cracking of the colder, less ductile, surfaces. Thin sections cool faster than thick sections, and this may further complicate the flow behavior.

To minimize problems, it is desirable to keep the workpiece temperatures as uniform as possible. Heated dies can reduce the rate of heat transfer, but die life tends to be compromised. For example, dies are frequently heated to 325° to 450°C (600° to 850°F) when used in the hot forming of steel. Tolerances could be improved and contact times could be increased if the tool temperatures could be raised to 550° to 650°C (1000° to 1200°F), but tool life drops so rapidly that these conditions become quite unattractive.

A final concern is the cool-down from the temperatures of hot working. Nonuniform cooling can introduce significant amounts of *residual stress* in hot-worked products. Associated with these stresses may be warping or distortion, and possible cracking.

COLD WORKING

The plastic deformation of metals below the recrystallization temperature is known as *cold working*. Here, the deformation is usually performed at room temperature, but mildly elevated temperatures may be used to provide increased ductility and reduced strength. From a manufacturing viewpoint, cold working has a number of distinct advantages, and the various cold-working processes have become quite prominent. Recent advances have expanded their capabilities, and a trend toward increased cold working appears likely to continue.

When compared to hot working, the advantages of cold working include the following:

1. No heating is required.
2. Better surface finish is obtained.
3. Superior dimensional control is achieved since the tooling sets dimensions at room temperature. As a result, little, if any, secondary machining is required.
4. Products possess better reproducibility and interchangeability.
5. Strength, fatigue, and wear properties are all improved through strain hardening.
6. Directional properties can be imparted.
7. Contamination problems are minimized.

Some disadvantages associated with cold-working processes include the following:

1. Higher forces are required to initiate and complete the deformation.
2. Heavier and more powerful equipment and stronger tooling are required.
3. Less ductility is available.
4. Metal surfaces must be clean and scale-free.
5. Intermediate anneals may be required to compensate for the loss of ductility that accompanies strain hardening.
6. The imparted directional properties may be detrimental.
7. Undesirable residual stresses may be produced.

The strength levels induced by strain hardening are often comparable to those produced by the strengthening heat treatments. Even when the precision and surface finish of cold working are not required, it may be cheaper to produce a product by cold working a less expensive alloy (achieving the strength by strain hardening) than by heat treating parts that have been hot formed from a heat-treatable alloy. In addition, better and more ductile metals and an improved understanding of plastic flow have done much to reduce the difficulties often experienced during cold forming. As an added benefit, most cold-working processes eliminate or minimize the production of waste material and the need for subsequent machining—a significant feature with today's emphasis on conservation and materials recycling.

Because the cold-forming processes require powerful equipment and product-specific tools or dies, they are best suited for large-volume production of precision parts where the quantity of products can justify the cost of the equipment and tooling. Considerable effort has been devoted to developing and improving cold-forming machinery along with methods to enable these processes to be economically attractive for modest production quantities. By grouping products made from the same starting material and using quick-change tooling, cold-forming processes can often be adapted to small-quantity or just-in-time manufacture.

Metal Properties and Cold Working. The suitability of a metal for cold working is determined primarily by its tensile properties, and these are a direct consequence of its metallurgical structure. Cold working then alters that structure, thereby altering the tensile properties of the resulting product. It is important for both the incoming and outgoing properties to be considered when selecting metals that are to be processed by cold working.

Figure 15-6 presents the true stress–true strain curves for both a low- and a high-carbon steel. Focusing on the low-carbon material, we note that plastic deformation cannot occur until the strain exceeds the strain associated with the elastic limit, point *a* on the stress–strain curve. Plastic deformation then continues until the strain reaches the value x_4, where the metal ruptures. From the viewpoint of cold working, two features are significant: (1) the magnitude of the yield-point stress, which determines the force required to initiate permanent deformation, and (2) the extent of the strain region from x_1 to x_4, which indicates the amount of plastic deformation (or ductility) that can be achieved without fracture. If a considerable amount of deformation is desired, a material like the low-carbon steel is more desirable than the high-carbon variety. Greater ductility would be available and less force would be required to initiate and continue the deformation. The curve on the right, however, has a higher strain-hardening coefficient (see Chapter 2 for discussion). If strain hardening is being used to impart strength, this material would have a greater increase in strength for the same amount of cold work. In addition, the material on the right would be more attractive for shearing operations and might be easier to machine (see Chapter 20).

Springback is another cold-working phenomenon that can be explained with the aid of a stress–strain diagram. When a metal is deformed by the application of a load, part of the resulting deformation is elastic. For example, if a metal is stretched to point x_1 in Figure 15-6 and the load is removed, it will return to its original size and shape

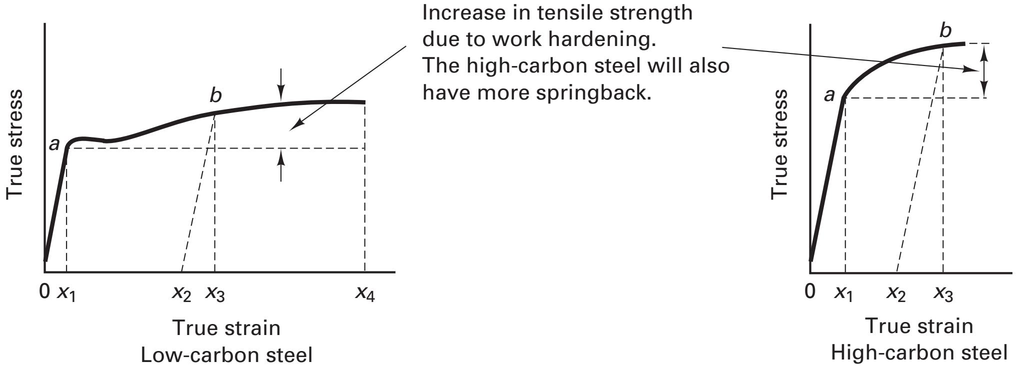

FIGURE 15-6 Use of true stress–true strain diagrams to assess the suitability of two metals for cold working.

because all of the deformation is elastic. If, on the other hand, the metal is stretched by an amount x_3, corresponding to point *b* on the stress–strain curve, the total strain is made up of two parts, a portion that is elastic and another that is plastic. When the deforming load is removed, the stress relaxation will follow line bx_2, and the final strain will only be x_2. The decrease in strain, $x_3 - x_2$, is known as *elastic springback*.

In cold-working processes, springback can be extremely important. If a desired size is to be achieved, the deformation must be extended beyond that point by an amount equal to the springback. Since different materials have different elastic moduli, the amount of springback from a given load will change from one material to another. A substitution in material, therefore, may well require adjustments in the forming process. Fortunately, springback is a predictable phenomenon, and most difficulties can be prevented by proper design procedures.

Initial and Final Properties in a Cold-Working Process. The quality of the starting material is often key to the success or failure of a cold-working operation. To obtain a good surface finish and maintain dimensional precision, the starting material must be clean and free of oxide or scale that might cause abrasion and damage to the dies or rolls. Scale can be removed by pickling, a process in which the metal is dipped in acid and then washed. In addition, sheet metal and plate are sometimes given a light cold rolling prior to the major deformation. The rolling operation not only assures uniform starting thickness but also produces a smooth starting surface.

The light cold-rolling pass can also serve to remove the *yield-point phenomenon* and the associated problems of nonuniform deformation and surface irregularities in the product. Figure 15-7 presents an expansion of the left-hand region of Figure 2-6 or Figure 15-6, a stress–strain curve that is typical of many low-carbon steels. After loading to the upper yield point, the material exhibits a *yield-point runout* wherein the material can strain up to several percent with no additional force being required. Consider a piece of sheet metal that is to be formed into an automotive body panel. If a segment of that panel were to receive a total stretch less than the magnitude of the yield-point runout, it would be induced by a stress equal to the yield-point stress. Since the stress is constant in the runout region, the material is free to not deform at all, to deform the entire amount of the yield-point runout, or to select some point in between. It is not uncommon for some regions to deform the entire amount and thin correspondingly, while adjacent regions resist deformation and retain the original thickness. The resulting ridges and valleys, shown in Figure 15-7, are referred to as Luders bands or stretcher strains and are very difficult to remove or conceal. By first cold rolling the material to a strain near or past the yield-point runout, all subsequent forming occurs in a region where a well-defined strain corresponds to each value of stress. If the body panel were shaped from pre-rolled material, the deformation and thinning would be uniform throughout the piece.

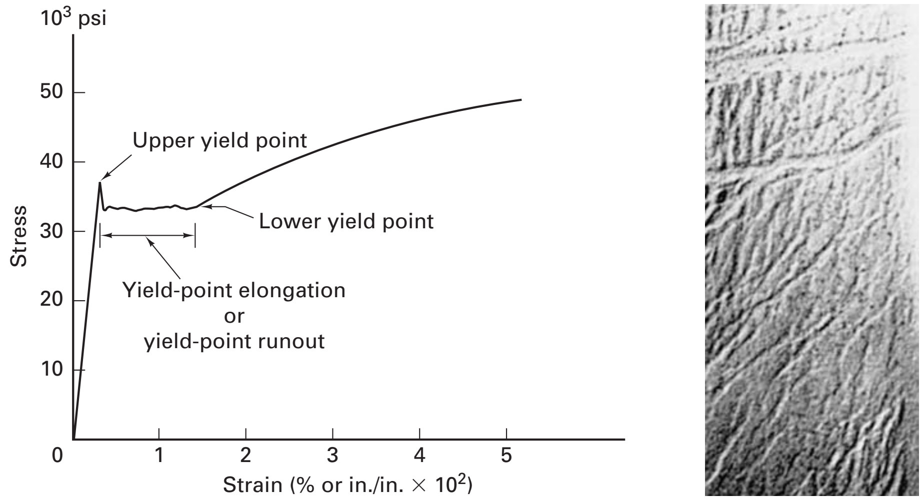

FIGURE 15-7 (Left) Stress–strain curve for a low-carbon steel showing the commonly observed yield-point runout; (Right) Luders bands or stretcher strains that form when this material is stretched to an amount less than the yield-point runout.

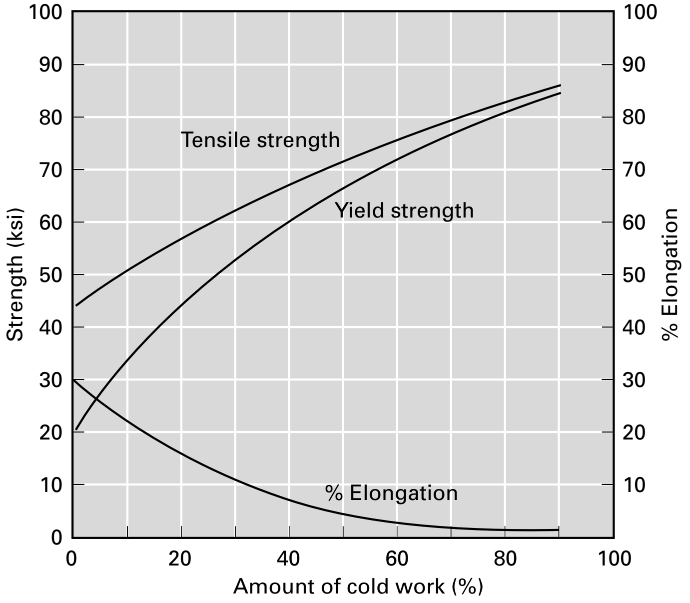

FIGURE 15-8 Mechanical properties of pure copper as a function of the amount of cold work (expressed in percent).

Figure 15-8 shows how the mechanical properties of pure copper are affected by cold working. Individual tensile tests were conducted on specimens that had experienced progressively greater amounts of cold work. As the graph shows, yield strength and tensile strength increase with increased deformation. Hardness is not presented on the graph but generally follows tensile strength. Since the ductility decreases, the amount of cold working is generally limited by the onset of fracture. Reduction in area would show a decline similar to elongation, as would electrical conductivity and corrosion resistance.

In order to maximize the amount of starting ductility, an *annealing* heat treatment is often applied to a metal prior to cold working. If the required amount of deformation exceeds the fracture limit, however, *intermediate anneals* may be performed to restore ductility (set the amount of cold work back to zero), thereby enabling further working without the risk of fracture. If the desired final properties coincide with a given amount of cold work, the last anneal can be judiciously positioned in the deformation cycle. In this way, the desired shape can be produced along with the mechanical properties that accompany the amount of cold work imparted following that anneal. In all annealing operations, care should be exercised to control the grain size of the resulting material. Grain sizes that are too large or too small can both be detrimental.

Cold working, like hot working, also produces an anisotropic structure—one whose properties vary with direction. Here, the *anisotropy* is related to the distorted crystal structure and is not simply a function of the nonmetallic inclusions. Also associated with cold working is the generation of residual stresses. While anisotropy and residual stresses can be beneficial, they can also be quite harmful. Since they occur as a consequence of cold working, their effect on performance should always be considered.

WARM FORMING

Deformation produced at temperatures intermediate to hot and cold forming is known as *warm forming*. Compared to cold forming, warm forming offers the advantages of reduced loads on the tooling and equipment, increased material ductility, and a possible reduction in the number of anneals due to a reduction in the amount of strain hardening. The use of higher forming temperatures can often expand the range of materials and geometries that can be formed by a given process or piece of equipment. High-carbon steels may be formed without a spheroidization treatment.

Compared to hot forming, the lower temperatures of warm working produce less scaling and decarburization, and enable production of products with better dimensional precision and smoother surfaces. Finish machining is reduced and less material is converted into scrap. Because of the finer structures and the presence of some strain hardening, the as-formed properties may be adequate for many applications, enabling the elimination of final heat-treatment operations. The warm regime generally requires less energy than hot working due to the decreased energy in heating the workpiece (lower temperature), energy saved through higher precision (less material being heated), and the possible elimination of postforming heat treatments. Although the tools must exert 25 to 60% higher forces, they last longer since there is less thermal shock and thermal fatigue.

When energy was cheap, metalforming was usually conducted in either the hot- or cold-working regimes, and warm working was largely ignored. Even today, material behavior is less well characterized for the warm-working temperatures (the warm-working temperatures for steel are between 550° and 800°C or 1000° and 1500°F). Lubricants have not been as fully developed for the warm-working temperatures and pressures, and die design technology is not as well established. Nevertheless, the pressures of energy and material conservation, coupled with the other cited benefits, strongly favor the continued development of warm working. Cold forming is still the preferred method for fabricating small components, but warm forming is considered to be attractive for larger parts (up to about 10 lb) and steels with more than 0.35% carbon and/or high alloy content.

Hot working and warm forming are usually applied to bulk forming processes, like forging and extrusion. For sheet material, the surface-to-volume ratio is sufficiently large that the workpiece can rapidly lose its heat. As the major auto manufacturers seek to increase fuel efficiency, there has been significant interest in aluminum sheet as a replacement for steel. Unfortunately, the formability of high-strength aluminum is much lower than that of low-carbon steels of similar strength. If the steel is simply converted to aluminum, and the design and tooling remain unchanged, fracture often occurs in the more heavily worked regions. If the material, die, and blank holder are all heated to 200° to 300°C (400° to 575°F), however, aluminum sheet shows a significant increase in formability, and satisfactory parts can generally be produced.

ISOTHERMAL FORMING

Figure 15-9 shows the relationship between yield strength (or forging pressure) and temperature for several engineering metals. The 1020 and 4340 steels show a moderate increase in strength with decreasing temperature. In contrast, the strength of the titanium alloy (open circles) and the A-286 nickel-based superalloy (solid circles) shows a much stronger variation. Within the range of typical hot-working temperatures, cooling of as little as 100°C (200°F) could result in a doubling in strength. During hot forming, cooling surfaces surround a hotter interior. Any variation in strength can result in nonuniform deformation and cracking of the less ductile surface.

To successfully deform temperature-sensitive materials, deformation may have to be performed under *isothermal* (constant-temperature) conditions. The dies or tooling

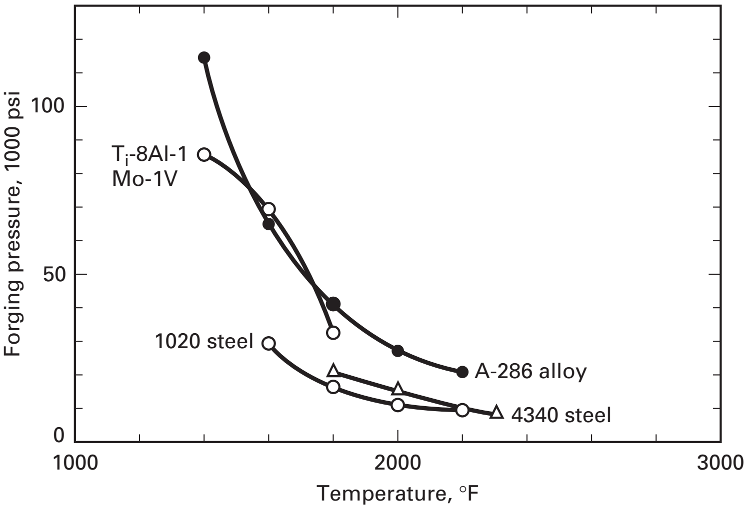

FIGURE 15-9 Yield strength of various materials (as indicated by pressure required to forge a standard specimen) as a function of temperature. Materials with steep curves may require isothermal forming. *(From "A Study of Forging Variables," ML-TDR-64-95, March 1964; courtesy of Battelle Columbus Laboratories, Columbus, OH.)*

must be heated to the same temperature as the workpiece, sacrificing die life for product quality. Deformation speeds must be slowed so that any heat generated by deformation can be removed in a manner that would maintain a uniform and constant temperature. Inert atmospheres may be required because of the long times at elevated temperature. Although such methods are indeed costly, they are often the only means of producing satisfactory products from certain materials. Because of the uniform temperatures and slow deformation speeds, isothermally formed components generally exhibit close tolerances, low residual stresses, and fairly uniform metal flow.

Key Words

abrasion
adhesion
anisotropy
annealing
bending
bulk flow
coefficient of friction
cold working
constitutive relation
deformation processes
dependent variable
dimensional precision
elastic springback
flow structure
friction
hot working
independent variable
intermediate anneal
isothermal forming
lubrication
Luders bands
oriented structure
plasticity
recrystallization
residual stresses
shearing
speed sensitivity
springback
strain hardening
stretcher strains
stringers
surface finish
tooling
tribology
warm working
wear
yield-point runout

Review Questions

1. What is plasticity?
2. What are some of the general assets of the metal deformation processes? Some general liabilities?
3. Why might large production quantities be necessary to justify metal deformation as a means of manufacture?
4. What is an independent variable in a metalforming process?
5. What is the significance of tool and die geometry in designing a successful metalforming process?
6. Why is lubrication often a major concern in metalforming?
7. What are some of the possible roles of a lubricant in addition to reducing friction?
8. What are some of the secondary effects that may occur when the speed of a metalforming process is varied?
9. What is a dependent variable in a metalforming process?
10. Why is it important to be able to predict the forces or powers required to perform specific forming processes?
11. Why is it important to know and control the thermal history of a metal as it undergoes deformation?
12. Why is it often difficult to determine the specific relationships between independent and dependent variables?
13. What are the three distinct ways of determining the interrelation of independent and dependent variables?
14. What features limit the value of laboratory experiments in modeling metalforming processes?
15. What features have contributed to the expanded use of process modeling?
16. What are some of the uses or applications of process models?
17. What is a constitutive relation for an engineering material?
18. What features may limit the accuracy of a mathematical model?
19. What simplifying assumptions are often made regarding friction between the tool and workpiece?
20. What type of information about the material being deformed may be particularly significant to a metalforming engineer?
21. How might a material's performance vary with changes in the speed of deformation?
22. Why is friction such an important parameter in metalworking operations?
23. Why are friction effects in metalworking difficult to scale down for laboratory testing or scale up from laboratory conditions to production conditions?
24. What are several ways in which the friction conditions during metalworking differ from the friction conditions found in most mechanical equipment?
25. According to modern friction theory, frictional resistance can be attributed to what two physical phenomena?
26. Discuss the significance of wear in metalforming: (a) wear on the workpiece and (b) wear on the tooling.
27. Lubricants are often selected for properties in addition to their ability to reduce friction. What are some of these additional properties?
28. What are some of the benefits that can be obtained by fully separating a tool and workpiece by an intervening layer of lubricant?
29. If the temperature of a material is increased, what changes in properties might occur that would promote the ease of deformation?
30. Define the various regimes of cold working, warm working, and hot working in terms of the melting point of the material being formed.
31. What is an acceptable definition of hot working? Is a specific temperature involved?
32. What are some of the attractive manufacturing and metallurgical features of hot-working processes?
33. What are some of the negative aspects of hot working?

34. How can hot working be used to improve the grain structure of a metal?
35. If the deformed grains recrystallize during hot working, how can the process impart an oriented or flow structure (and directionally dependent properties)?
36. Why are heated dies or tools often employed in hot-working processes?
37. What generally restricts the upper temperature to which dies or tooling is heated?
38. What is the primary cause of residual stresses in hot-worked products?
39. Compared to hot working, what are some of the advantages of cold-working processes?
40. What are some of the disadvantages of cold-forming processes?
41. How could cold working be used to reduce the cost of a moderate to high strength product?
42. How can the tensile test properties of a metal be used to assess its suitability for cold forming?
43. Why is elastic springback an important consideration in cold-forming processes?
44. What are Luders bands or stretcher strains, and what causes them to form? How can they be eliminated?
45. What engineering properties are likely to decline during the cold working of a metal?
46. How can the selective placement of the final intermediate anneal be used to establish desired final properties in a cold-formed product?
47. Is the anisotropy induced by cold working an asset or a liability? What about the residual stresses?
48. What are some of the advantages of warm forming compared to cold forming? Compared to hot forming?
49. What material feature is considered to be the driving force for isothermal forming?
50. Why is isothermal forming considerably more expensive than conventional hot forming?

■ Problems

1. Copper is being reduced from a hot-rolled 3/8-in.-diameter rod to a final diameter of 0.100 in. by wire drawing through a series of dies. The final wire should have a yield strength in excess of 50,000 psi and an elongation greater than 10%. Use Figure 15-8 to determine a desirable amount of final cold work. Compute the placement of the last intermediate anneal so that the final product has both the desired size and the desired properties.
2. a. List and discuss the various economic factors that should be considered when evaluating a possible switch from cold forming to warm forming.
   b. Repeat part a for a possible conversion from hot forming to warm forming.
3. An advertisement for automobile spark plugs has cited the superiority of rolled threads over machined threads. Figure 15-5 shows such a comparison for hot forming, where the deformation process reorients flaws and defects without significantly changing the structure and properties of the metal. The spark plug threads, however, were formed by cold rolling. Do the same benefits apply? Discuss the assets and liabilities of the cold rolling of threads compared to thread formation by conventional machining.
4. Computer modeling of metal deformation processes is a powerful and extremely useful tool. At the same time, there are several areas of limitation that can significantly compromise or even invalidate the final results. Consider each of the following areas of limitation, investigating what is currently being used or what current options are available:
   a. A mathematical description of material behavior (a constitutive equation). In almost all cases, some simplification of actual flow behavior is assumed. For accurate modeling, flow behavior should be known and mathematically characterized as a function of strain, strain rate, and temperature.
   b. Interfacial friction between the tooling and the workpiece. How is this being modeled? Does it consider the effects of surface finish, sliding velocity, interface temperature, and numerous other factors. As the process commences, lubricants may thin or be wiped from surfaces, forces and pressures change, temperatures change, and surface roughness or texture is modified. Does the model reflect any of these changes? Some models assign a single value to friction over the entire contact surface. This value may also remain constant throughout the entire operation.
   c. Assignment of boundary conditions. Often the mathematical solutions must conform to assigned features, such as defined motions or stresses at specified surfaces. The boundary conditions have a profound effect on the results that are calculated. Poor choices or choices made so as to facilitate easy analysis can often produce misleading or erroneous results.

www.wiley.com/college/degarmo

Chapter 15 CASE STUDY

Repairs to a Damaged Propeller

The propeller of a moderately large pleasure boat has been cast from a nickel-aluminum-bronze alloy that contains 82% Cu, 9% Al, 4% Ni, 4% Fe, and 1% Mn. It is approximately 13 inches in diameter with three 10-pitch blades and has been designed for both fresh-water and saltwater usage.

1. One of the blades has struck a rock and is badly bent. A replacement propeller is quite expensive and cannot be obtained for several weeks. An attractive alternative, therefore, may be to repair the existing piece. Would you recommend such a repair, and how would you proceed? Can it simply be hammered back into shape? Would you recommend any additional processing, either before or after the repair? What is the rationale for your recommendations?
2. A second propeller, identical to the one above, has also been damaged by an impact. This time, however, the damage is in the form of a crack at the base of one of the blades, as shown in the figure. Since the crack does not penetrate into the hub, it is proposed that a repair be made using some form of welding or brazing process. Would you recommend such a repair? If so, how would you suggest the repair be made? Explain the rationale for your recommendations and outline the procedure that should be followed. Would there be any sacrifice in quality or performance with the repaired propeller?

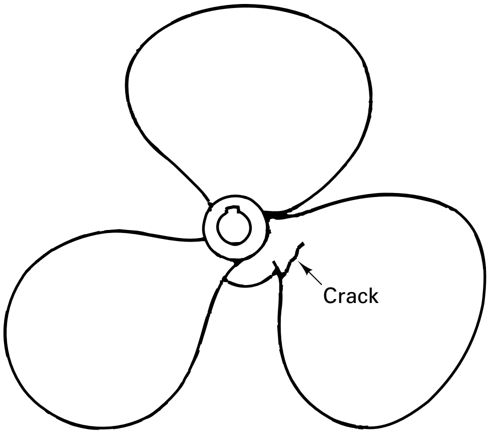

CHAPTER 16

BULK FORMING PROCESSES

■ 16.1 INTRODUCTION

The shaping of metal by deformation is as old as recorded history. The Bible, in the fourth chapter of Genesis, introduces Tubal-cain and cites his ability as a worker of metal. While we have no description of his equipment, it is well established that metal forging was practiced long before written records. Processes such as rolling and wire drawing were common in the Middle Ages and probably date back much further. In North America, by 1680 the Saugus Iron Works near Boston had an operating drop forge, rolling mill, and slitting mill.

Although the basic concepts of many forming processes have remained largely unchanged throughout history, the details and equipment have evolved considerably. Manual processes were converted to machine processes during the Industrial Revolution. The machinery then became bigger, faster, and more powerful. Water wheel power was replaced by steam and then by electricity. More recently, computer-controlled, automated operations have become the norm.

■ 16.2 CLASSIFICATION OF DEFORMATION PROCESSES

A wide variety of processes have been developed to mechanically shape material, and a number of classification methods have been proposed. One approach divides the processes into *primary* and *secondary*. Primary processes reduce a cast material into intermediate shapes, such as slabs, plates, or billets. Secondary processes further convert these shapes into finished or semifinished products. Unfortunately, some processes clearly fit both categories, depending on the particular product being made.

In Chapter 15, we discussed the temperature of deformation and presented the various regimes based on the temperature of the workpiece. These included cold working, warm working, hot forming, and isothermal deformation. This classification has also become somewhat blurred, especially with the increased emphasis on energy conservation. Processes that were traditionally performed hot are now being performed cold, and cold-forming processes can often be enhanced by some degree of heating. Warm working has experienced considerable growth.

Chapters 16 and 17 utilize a division that focuses on the size and shape of the workpiece and how that size and shape is changed. *Bulk deformation processes* are those where the thicknesses or cross sections are reduced or shapes are significantly changed. Since the volume of the material remains constant, changes in one dimension require proportionate changes in others. Thus the enveloping surface area changes significantly, usually increasing as the product lengthens or the shape becomes more complex. The bulk forming operations can be performed in all of the temperature regimes. Common processes include: rolling; forging; extrusion; cold forming; and wire, rod, and tube drawing.

In contrast, *sheet-forming operations* involve the deformation of a material where the thickness and surface area remain relatively constant. Common processes include shearing or blanking, bending, and deep drawing. Because of the large surface-to-volume ratio, sheet material tends to lose heat rapidly, and most sheet-forming operations are performed cold.

Even this division is not without confusion, however. Coining, for example, begins with sheet material but alters the thickness in a complex manner that is essentially bulk deformation. The bulk deformation processes will be presented in Chapter 17. Sheet-forming processes can be found in Chapter 18.

16.3 BULK DEFORMATION PROCESSES

The bulk deformation processes that will be presented in this chapter include:

1. Rolling
2. Forging
3. Extrusion
4. Wire, rod, and tube drawing
5. Cold forming, cold forging, and impact extrusion
6. Piercing
7. Other squeezing processes

These processes can be further divided in several ways. One grouping separates the processes by focusing on the size and shape of the deforming region. In continuous flow processes, such as forging, the size and shape are continually changing, and process analysis must reflect this change. In processes such as rolling or wire drawing, material moves through the deforming region, but the size and shape of that region remain unchanged. Some form of steady-state analysis can often be applied.

In all of the bulk forming processes, the primary deformation stress is compression. This may be applied directly by tools or dies that squeeze the workpiece or indirectly as in wire drawing, where the workpiece is pulled in tension but the resisting die generates compression in the region undergoing deformation.

16.4 ROLLING

Rolling operations reduce the thickness or change the cross section of a material through compressive forces exerted by rolls. As shown in Figure 16-1, rolling is often the first process that is used to convert material into a finished wrought product. Thick starting stock can be rolled into blooms, billets, or slabs, or these shapes can be obtained directly from continuous casting. A *bloom* has a square or rectangular cross section, with a thickness greater than 15 cm (6 in.) and a width no greater than twice the thickness. A *billet* is usually smaller than a bloom and has a square or circular cross section. Billets are usually produced by some form of deformation process, such as rolling or extrusion. A *slab* is a rectangular solid where the width is greater than twice the thickness. Slabs can be further rolled to produce *plate*, *sheet*, and *strip*. Plates have thickness greater than 6 mm ($\frac{1}{4}$ inch), while sheet and strip range from 6 mm to 0.1 mm ($\frac{1}{4}$ inch to 0.004 inch).

These hot-rolled products often form the starting material for subsequent processes, such as cold forming or machining. Sheet and strip can be fabricated into products or

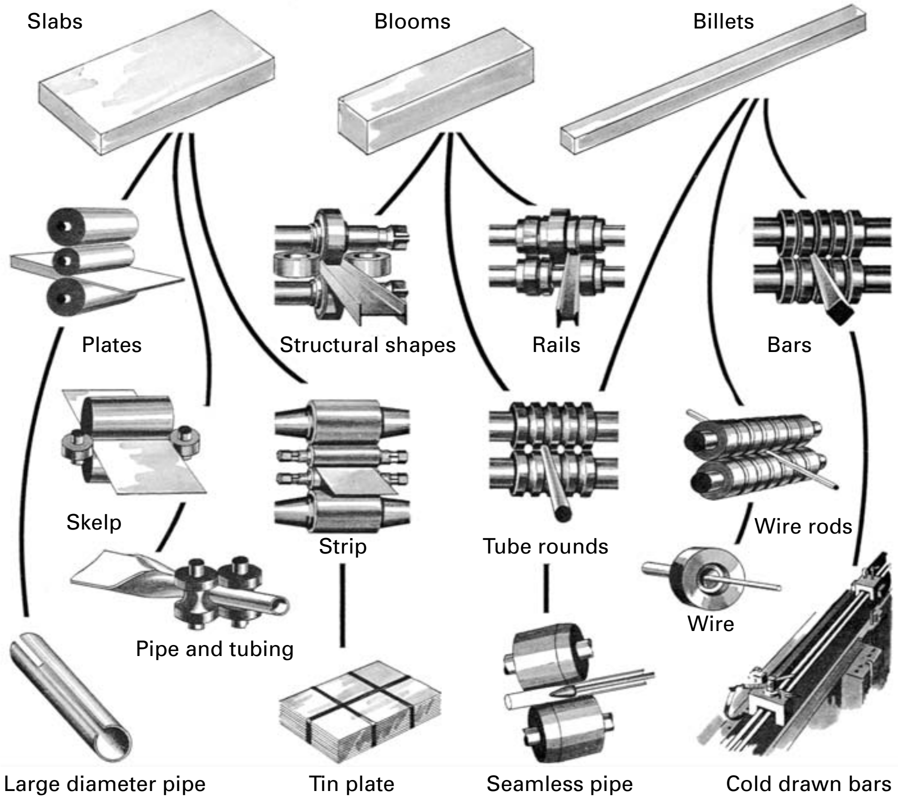

FIGURE 16-1 Flow chart for the production of various finished and semifinished steel shapes. Note the abundance of rolling operations. *(Courtesy of American Iron and Steel Institute, Washington, D.C.)*

further cold rolled into thinner, stronger material or even into foil (thicknesses less than 0.1 mm). Blooms and billets can be further rolled into finished products, such as *structural shapes* or railroad rail, or they can be processed into semifinished shapes, such as *bar*, *rod*, *tube*, or *pipe*.

From a tonnage viewpoint, rolling is clearly predominant among all manufacturing processes, with approximately 90% of all metal products experiencing at least one rolling operation. Rolling equipment and rolling practices are sufficiently advanced that standardized, uniform-quality products can be produced at relatively low cost. Because shaped rolls are both massive and costly, shaped products are only available in standard forms and sizes where there is sufficient demand to permit economical production.

BASIC ROLLING PROCESS

In the basic rolling process, shown in Figure 16-2, metal is passed between two rolls that rotate in opposite directions, the gap between the rolls being somewhat less than the thickness of the entering metal. Because the rolls rotate with a surface velocity that exceeds the speed of the incoming metal, friction along the contact interface acts to propel the metal forward. The metal is then squeezed and elongates to compensate for the decrease in thickness or cross-sectional area. The amount of deformation that can be achieved in a single pass between a given pair of rolls depends on the friction conditions along the interface. If too much is demanded, the rolls cannot advance the material and simply skid over its surface. If too little deformation is taken, the operation will be successful, but the additional passes required to produce a given part will increase the cost of production.

HOT ROLLING AND COLD ROLLING

In hot rolling, as with all hot-working processes, temperature control is required for success. The starting material should be heated to a uniform elevated temperature. If the temperature is not uniform, the subsequent deformation will not be uniform. Consider a piece being reheated for rolling. If the soaking time is insufficient, the hotter exterior will flow in preference to the cooler, stronger interior. Conversely, if a uniform-temperature material is allowed to cool prior to working or has cooled during previous working operations,

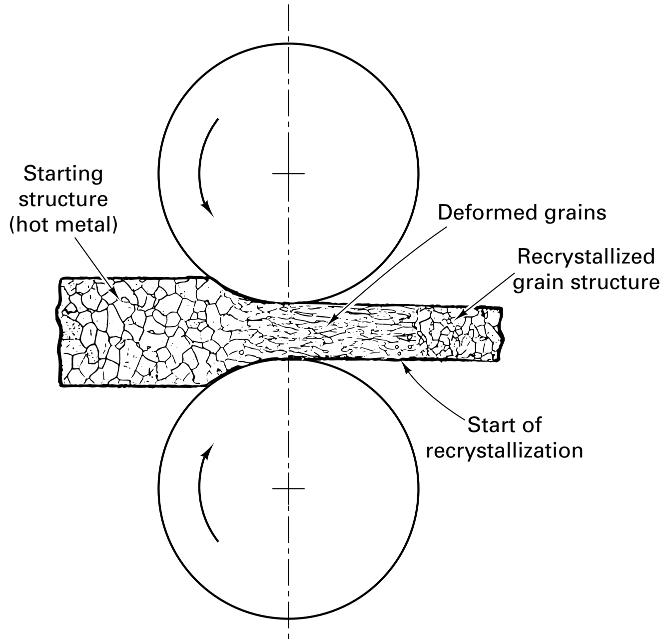

FIGURE 16-2 Schematic representation of the hot-rolling process, showing the deformation and recrystallization of the metal being rolled.

the cooler surfaces will tend to resist deformation. Cracking and tearing of the surface may result as the hotter, weaker interior tries to deform.

It is not uncommon for high-volume producers to begin with continuous-cast feedstock. The cooling from solidification is controlled so as to enable direct insertion into a hot-rolling operation without additional handling or reheating. For smaller operations or secondary processing, the starting material is often a room-temperature solid, such as an ingot, slab, or bloom. This material must first be brought to the desired rolling temperature, usually in gas- or oil-fired soaking pits or furnaces. For plain-carbon and low-alloy steels, the soaking temperature is usually about 1200°C (2200° F). For smaller cross sections, induction coils may be used to heat the material prior to rolling.

Hot-rolling operations are usually terminated when the temperature falls to about 50° to 100°C (100° to 200°F) above the recrystallization temperature of the material being rolled. Such a *finishing temperature* ensures the production of a uniform fine grain size and prevents the possibility of unwanted strain hardening. If additional deformation is required, a period of reheating will be necessary to reestablish desirable hot-working conditions.

Cold rolling can be used to produce sheet, strip, bar, and rod products with extremely smooth surfaces and accurate dimensions. Cold-rolled *sheet* and *strip* can be obtained in various conditions, including *skin-rolled*, *quarter-hard*, *half-hard*, and *full-hard*. Skin-rolled metal is subjected to only a 0.5 to 1% reduction to produce a smooth surface and uniform thickness, and to remove or reduce the yield-point phenomenon (i.e., prevent formation of Luders bands upon further forming). This material is well suited for subsequent cold-working operations where good ductility is required. Quarter-hard, half-hard, and full-hard sheet and strip experience greater amounts of cold reduction, up to 50%. Their yield points are higher, properties have become directional, and ductility has decreased. Quarter-hard steel can be bent back on itself across the grain without breaking. Half-hard and full-hard can be bent back 90° and 45°, respectively, about a radius equal to the material thickness.

For products with a uniform cross section and cross-sectional dimensions less than about 5 cm or 2 inches, cold rolling of rod or bar may be an attractive alternative to extrusion or machining. Strain hardening can provide up to 20% additional strength to the material, and the process offers the smooth surfaces and high dimensional precision of cold working. Like the rolling of structural shapes, however, the process generally requires a series of shaping operations. Separate roll passes (and roll grooves) may be required for sizing, breakdown, roughing, semiroughing, semifinishing, and finishing. While the various grooves may be in a single set of rolls, a minimum order of several tons of product may be required to justify the cost of tooling.

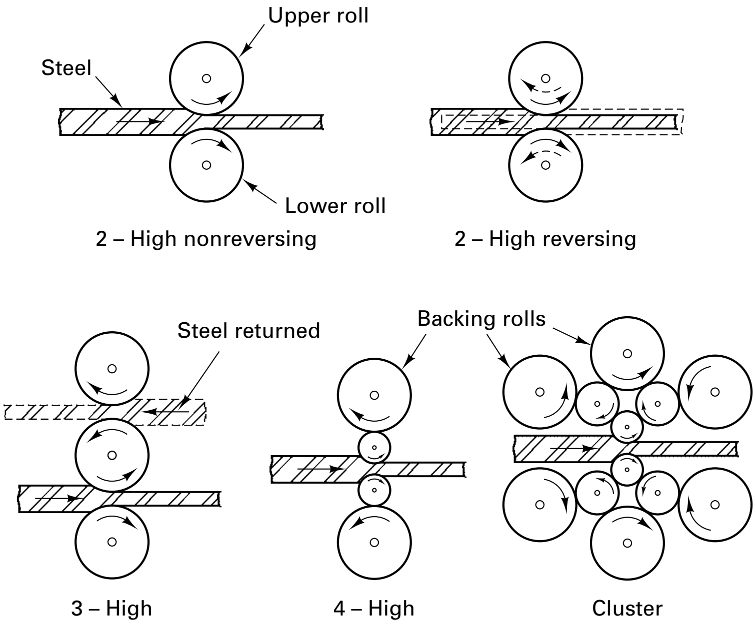

FIGURE 16-3 Various roll configurations used in rolling operations.

ROLLING MILL CONFIGURATIONS

As illustrated in Figure 16-3, rolling mill stands are available in a variety of roll configurations. Early reductions, often called primary, roughing, or breakdown passes, usually employ a two- or three-high configuration with rolls 60 to 140 cm (24 to 55 in.) in diameter. The *two-high nonreversing mill* is the simplest design, but the material can only pass through the mill in one direction. A *two-high reversing mill* permits back-and-forth rolling, but the rolls must be stopped, reversed, and brought back to rolling speed between each pass. A *three-high mill* eliminates the need for roll reversal but requires some form of elevator on each side of the mill to raise or lower the material and mechanical manipulators to turn or shift the product between passes.

As shown in Figure 16-4, smaller-diameter rolls produce less length of contact for a given reduction and therefore require lower force and less energy to produce a given change in shape. The smaller cross section, however, provides reduced stiffness, and the rolls are prone to flex elastically since they are supported on the ends and pressed apart by the metal passing through the middle (a condition known as three-point bending). *Four-high* and *cluster* arrangements use backup rolls to support the smaller work rolls. These configurations are used in the hot rolling of wide plate and sheets, and in cold

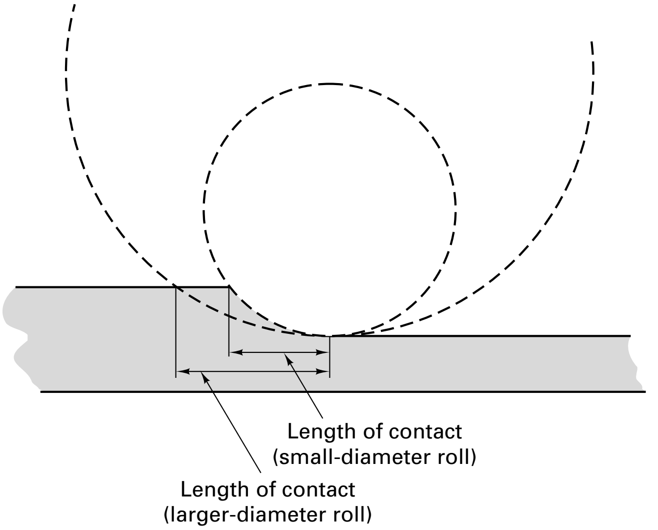

FIGURE 16-4 The effect of roll diameter on length of contact for a given reduction.

rolling, where even small deflections in the roll would result in an unacceptable variation in product thickness. Foil is almost always rolled on *cluster mills* since the small thickness requires small-diameter rolls. In a cluster mill, the roll in contact with the work can be as small as 6 mm ($\frac{1}{4}$ inch) in diameter. To counter the need for even smaller rolls, some foils are produced by *pack rolling*, a process where two or more layers of metal are rolled simultaneously as a means of providing a thicker input material. Household aluminum foil is usually rolled as a double sheet, as evidenced by the one shiny side (in contact with the roll) and one dull side (in contact with the other piece of foil).

In the rolling of nonflat or shaped products, such as structural shapes and railroad rail, the sets of rolls contain contoured grooves that sequentially form the desired shape, reduce the cross-sectional area, and control the metal flow. Figure 16-5 shows some typical roll-pass sequences used in the production of structural shapes. Length increases as the cross section is reduced.

CONTINUOUS (OR TANDEM) ROLLING MILLS

When the volume of a product justifies the investment, rolling may be performed on a *continuous* or *tandem rolling mill*. Billets, blooms, or slabs are heated and fed through an integrated series of nonreversing rolling mill stands. Continuous mills for the hot rolling of steel strip, for example, often consist of a roughing train of approximately four four-high mill stands and a finishing train of six or seven additional four-high stands. In a continuous structural mill, the rolls in each stand contain only one set of shaped grooves, in contrast to the multigrooved rolls used when the product is produced by back-and-forth passes through a single stand.

If a single piece of material is in multiple rolling stations at the same time, it is imperative that the same volume pass through each stand in the same amount of time. If the cross section is reduced, speed must be increased proportionately. Therefore, as a material is reduced in size, the rolls of each successive stand must turn faster than those of the preceding one. If a subsequent stand is running too slow, material will accumulate between stands. If the demand for incoming material exceeds the output of the previous stand, the material is placed in tension and may tear or rupture.

The synchronization of six or seven mill stands is not an easy task, especially when key variables such as temperature and lubrication may vary during a single run and the product may be exiting the final stand at speeds in excess of 110 kilometers per hour (70 miles per hour). Computer control is basic to successful rolling, and modern mills are equipped with numerous sensors to provide the needed information. When continuous casting units feed directly into continuous rolling mills, the time lapse from final solidification to finished rolled product is often a matter of a few minutes.

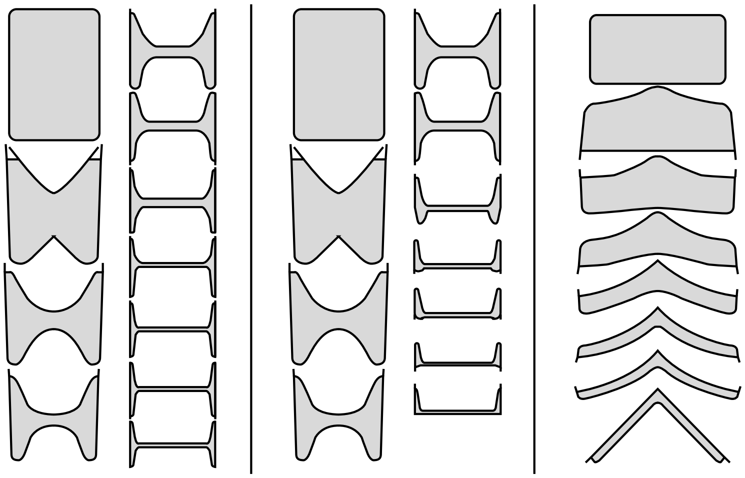

FIGURE 16-5 Typical roll-pass sequences used in producing structural shapes.

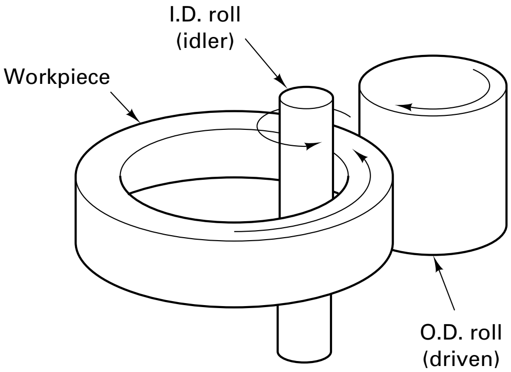

FIGURE 16-6 Schematic of a horizontal ring rolling operation. As the thickness of the ring is reduced, its diameter will increase.

RING ROLLING

Ring rolling is a special rolling process where one roll is placed through the hole of a thick-walled ring and a second roll presses in from the outside (Figure 16-6). As the rolls squeeze and rotate, the wall thickness is reduced and the diameter of the ring increases. Shaped rolls can be used to produce a wide variety of cross-section profiles. The resulting seamless rings have a circumferential grain orientation and find application in products such as rockets, turbines, airplanes, pipelines, and pressure vessels. Diameters can be as large as 8 m (25 ft) with face heights as great as 2 m (80 in.).

THREAD ROLLING

Thread rolling is a deformation alternative to the cutting of threads; it is illustrated in Figure 16-5 and discussed in Chapter 29.

CHARACTERISTICS, QUALITY, AND PRECISION OF ROLLED PRODUCTS

Because hot-rolled products are formed and finished above their recrystallization temperature, they have little directionality in their properties and are relatively free of deformation-induced residual stresses. These characteristics may vary, however, depending on the thickness of the product and the presence of complex sections. Nonmetallic inclusions do not recrystallize, so they may impart some degree of directionality. In addition, residual stresses can be induced by nonuniform cooling from the temperatures of hot working. Thin sheets often show directional characteristics, whereas thicker plate (above 20 mm or 0.8 in.) will usually have very little. Because of high residual stresses in the rapidly cooled edges, a complex shape, such as an I- or H-beam, may warp in a noticeable fashion if a portion of one flange is cut away.

As a result of the hot deformation and the good control that is maintained during processing, hot-rolled products are normally of uniform and dependable quality. It is quite unusual to find any voids, seams, or laminations when produced by reliable manufacturers. The surfaces of hot-rolled products are usually a bit rough, however, and are originally covered with a tenacious high-temperature oxide, known as *mill scale*. This can be removed by an acid pickling operation, resulting in a surprisingly smooth surface finish. The dimensional tolerances of hot-rolled products vary with the kind of metal and the size of the product. For most products produced in reasonably large tonnages, the tolerances are within 2 to 5% of the specified dimension (either height or width).

Cold-rolled products exhibit superior surface finish and dimensional precision, and they can offer the enhanced strength obtained through strain hardening.

FLATNESS CONTROL AND ROLLING DEFECTS

If we are rolling a flat product with uniform thickness, the gap between the rolls must be a uniform one. Attaining such an objective, however, may be difficult. Consider the upper roll in a set that is rolling sheet or plate. As shown in Figure 16-7, the material presses upward in the middle of the roll, while the roll is held in place by bearings that are mounted on either end and supported in the mill frame. The roll, therefore, is loaded in three-point bending and tends to flex in a manner that produces a thicker center and

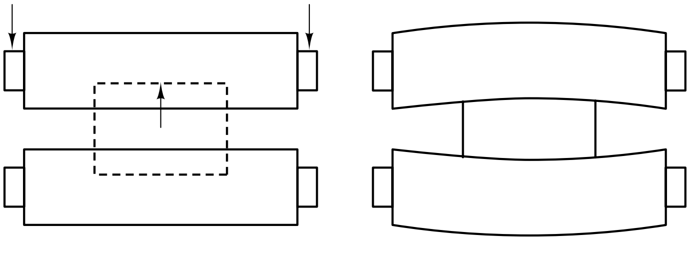

FIGURE 16-7 (a) Loading on a rolling mill roll. The top roll is pressed upward in the center while being supported on the ends. (b) The elastic response to the three-point bending.

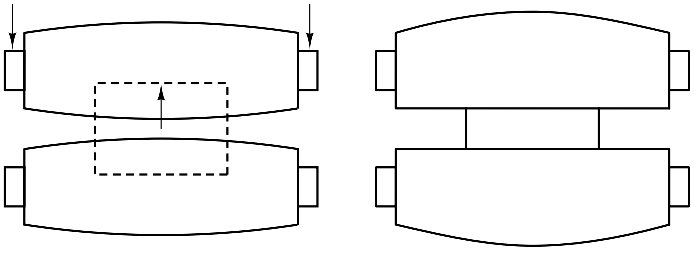

FIGURE 16-8 Use of a "crowned" roll to compensate for roll flexure. When the roll flexes in three-point bending, the crowned roll flexes into flatness.

thinner edge. Since the thicker center will not lengthen as much as the thinner edge, the result will be a product with either a wavy edge or a fractured center.

If the rolls are always used to reduce the same material at the same temperature by the same amount, the forces and deflections can be predicted and the roll can be designed to have a specified profile. If a "crowned," or barrel-shaped, roll is subjected to the designed load, it will deflect into flatness, as illustrated in Figure 16-8. If the applied load is not of the designed magnitude, however, the resulting profile will not be flat and defects may result. If the correction is insufficient, for example, wavy edges or center fractures will still occur. If the correction is excessive, the center becomes thinner and longer, resulting in a wavy center or cracking of the edges.

Since roll deflections are proportional to the forces applied to the rolls, product flatness can also be improved by measures that reduce these forces. If possible, friction could be reduced, smaller-diameter rolls could be used, and smaller reductions could be employed. Heating the workpiece generally makes it weaker, so increased workpiece temperature will also reduce the force on the rolls. Horizontal tensions can be applied to the piece as it is being rolled (strip tension in sheet metal rolling). Since these tensions combine with the vertical compression to deform the piece (stretching while squeezing), the roll forces and associated deflections are less. Other techniques to improve flatness include increasing the elastic modulus of the rolls themselves through material selection or providing some form of backup support to oppose deflection, as with the four-high and cluster mill configurations.

Successful rolling requires the balancing of many factors relating to the material being rolled, the variables of the rolling process, and lubrication between the workpiece and the rolls. Common defects include the nonuniform thickness previously discussed, dimensional variations caused by changes in workpiece temperature, surface flaws (such as rolled-in scale and roll marks), laps, seams, and various types of distortions.

THERMOMECHANICAL PROCESSING AND CONTROLLED ROLLING

As with most deformation processes, rolling is generally considered to be a way of changing the shape of a material. While heat may be used to reduce forces and promote plasticity, the thermal processes that produce or control product properties (heat treatments) are usually performed as subsequent operations. *Thermomechanical processing*, of which *controlled rolling* is an example, consists of integrating deformation and thermal processing into a single process that will produce not only the desired shape but also the desired properties, such as strength and toughness. The heat for the property modification is the same heat used in the rolling operation, and subsequent heat treatment becomes unnecessary.

A successful thermomechanical operation begins with process design. The starting material must be specified and the composition closely maintained. Then a time–temperature–deformation system must be developed to achieve the desired objective. Possible goals include producing a uniform fine grain size; controlling the nature, size, and distribution of the various transformation products (such as ferrite, pearlite, bainite, and martensite in steels); controlling the reactions that produce solid-solution strengthening or precipitation hardening; and producing a desired level of toughness. Starting structure (controlled by composition and prior thermal treatments), deformation details, temperature during the various stages of deformation, and the conditions of cool-down from the working temperature must all be specified and controlled. Moreover, the attainment of uniform properties requires uniform temperatures and deformations throughout the product. Computer-controlled facilities are an absolute necessity if thermomechanical processing is to be successfully performed.

Possible benefits of thermomechanical processing include improved product properties; substantial energy savings (by eliminating subsequent heat treatment); and the possible substitution of a cheaper, less alloyed metal for a highly alloyed one that responds to heat treatment.

■ 16.5 FORGING

Forging is a term applied to a family of processes that induce plastic deformation through localized compressive forces applied through dies. The equipment can take the form of hammers, presses, or special forging machines. While the deformation can be performed in all temperature regimes (hot, cold, warm, or isothermal), most forging is done with workpieces above the recrystallization temperature.

Forging is clearly the oldest known metalworking process. From the days when prehistoric peoples discovered that they could heat sponge iron and beat it into a useful implement by hammering with a stone, forging has been an effective method of producing many useful shapes. Modern forging is simply an extension of the ancient art practiced by the armor makers and immortalized by the village blacksmith. High-powered hammers and mechanical presses have replaced the strong arm and the hammer, and tool steel dies have replaced the anvil. Metallurgical knowledge has supplemented the art and skill of the craftsman, as we seek to control the heating and handling of the metal. Parts can range in size from ones whose largest dimension is less than 2 cm (1 in.) to others weighing more than 170 metric tons (450,000 lb).

The variety of forging processes currently offers a wide range of capabilities. A single piece can be economically fashioned by some methods, while others can mass-produce thousands of identical parts. The metal may be (1) *drawn out* to increase its length and decrease its cross section, (2) *upset* to decrease the length and increase the cross section, or (3) *squeezed in closed impression dies* to produce multidirectional flow. As indicated in Table 15-2, the state of stress in the work is primarily uniaxial or multiaxial compression.

Common forging processes include:

1. Open-die drop-hammer forging
2. Impression-die drop-hammer forging
3. Press forging
4. Upset forging
5. Automatic hot forging
6. Roll forging
7. Swaging
8. Net-shape and near-net-shape forging

OPEN-DIE HAMMER FORGING

In concept, *open-die hammer forging* is the same type of forging done by the blacksmith of old, but massive mechanical equipment is now used to impart the repeated blows. The metal is first heated to the proper temperature using a furnace or electrical induction heating. An impact is then delivered by some type of mechanical hammer. The simplest industrial hammer is a *gravity drop* machine, where a free-falling ram strikes the workpiece, and the energy of the blow is varied by adjusting the height of the drop. Most forging hammers now employ some form of energy augmentation, however, where pressurized air, steam, or hydraulic fluids are used to raise and propel the hammer. Higher striking velocities are achieved, with more control of striking force, easier automation, and the ability to shape pieces up to several tons. *Computer-controlled hammers* can provide blows of differing impact speed (energy) for different products or each of the various stages of a given operation. Their use can greatly increase the efficiency of the process and also minimize the amount of noise and vibration, which are the most common outlets for the excess energy not absorbed in the deformation of the workpiece. Figure 16-9 shows a large double-frame hammer along with a labeled schematic.

Open-die forging does not fully control the flow of metal. To obtain the desired shape, the operator must orient and position the workpiece between blows. The hammer may contact the workpiece directly, or specially shaped tools can be inserted to assist in making concave or convex surfaces, forming holes, or performing a cutoff operation. Manipulators may be used to position larger workpieces, which may weigh several tons. While some finished parts can be made by this technique, open-die forging is usually employed to preshape metal in preparation for further operations. For example, consider parts like turbine rotors and generator shafts with dimensions up to 20 m (70 ft) in length and up to 1 m (3 ft) in diameter. Open-die forging induces oriented plastic flow and

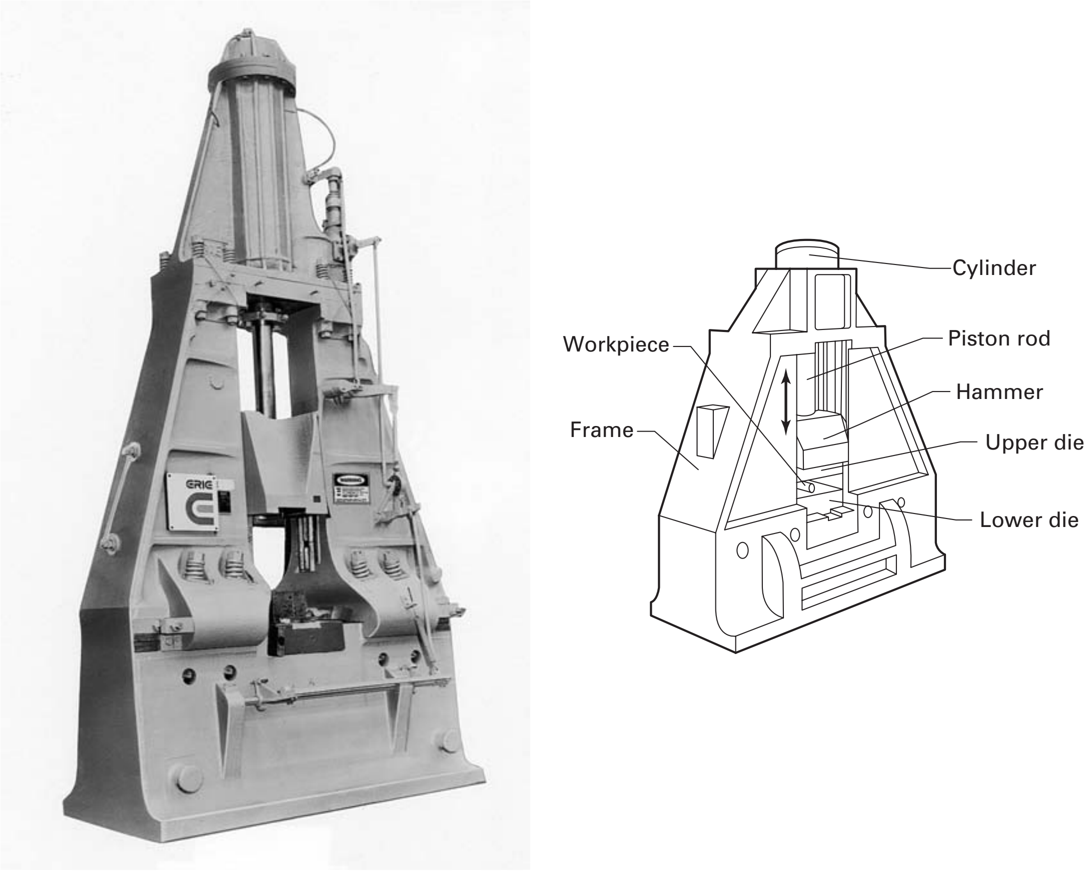

FIGURE 16-9 (Left) Double-frame drop hammer. *(Courtesy of Erie Press Systems, Erie, PA.)* (Right) Schematic diagram of a forging hammer.

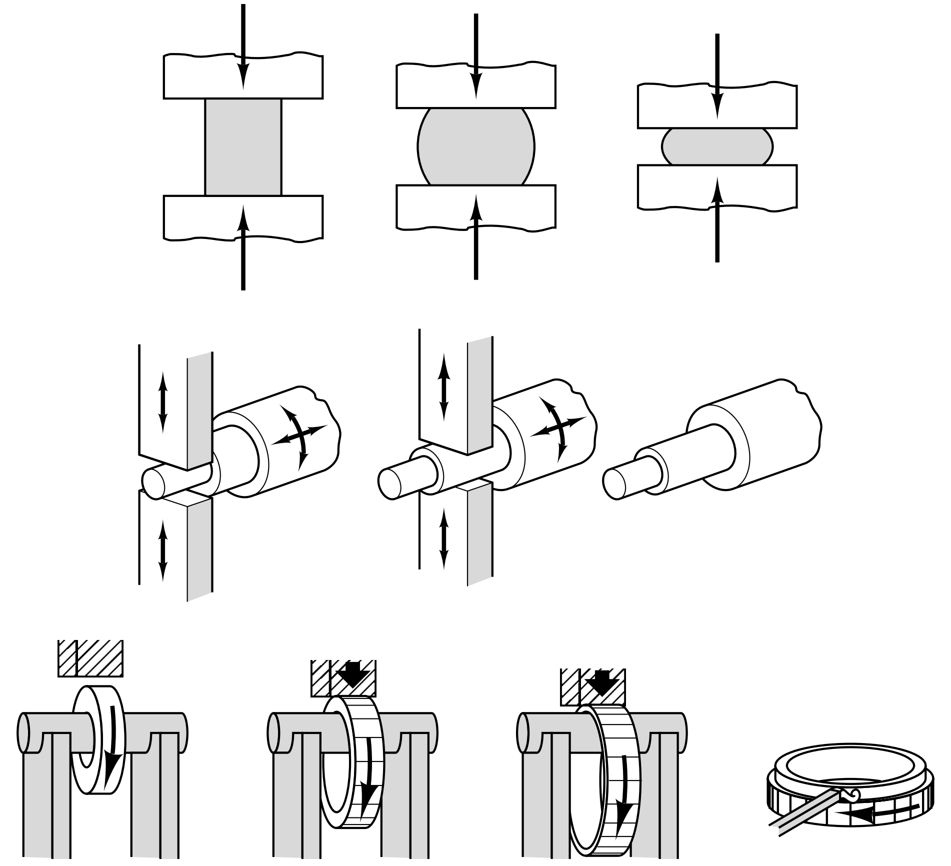

1 Preform mounted on saddle/mandrel.

2 Metal displacement–reduce preform wall thickness to increase diameter.

3 Progressive reduction of wall thickness to produce ring dimensions.

4 Machining to near net shape.

FIGURE 16-10 (Top) Illustration of the unrestrained flow of material in open-die forging. Note the barrel shape that forms due to friction between the die and material. (Middle) Open-die forging of a multidiameter shaft. (Bottom) Forging of a seamless ring by the open-die method. *(Courtesy of Forging Industry Association, Cleveland, OH.)*

minimizes the amount of subsequent machining. Figure 16-10 illustrates the unrestricted flow of material along with the open-die forging of a multidiameter cylindrical shaft and a seamless metal ring.

IMPRESSION-DIE HAMMER FORGING

Open-die hammer forging (or smith forging, as it has been called) is a simple and flexible process, but it is not practical for large-scale production. It is a slow operation, and the shape and dimensional precision of the resulting workpiece is dependent on the skill of the operator. As shown in Figure 16-11, *impression-die* or *closed-die forging* overcomes these difficulties by using shaped dies to control the flow of metal. Figure 16-12 shows a typical set of multicavity dies. The upper piece attaches to the hammer and the lower piece to the anvil. Heated metal is positioned in the lower cavity and struck one

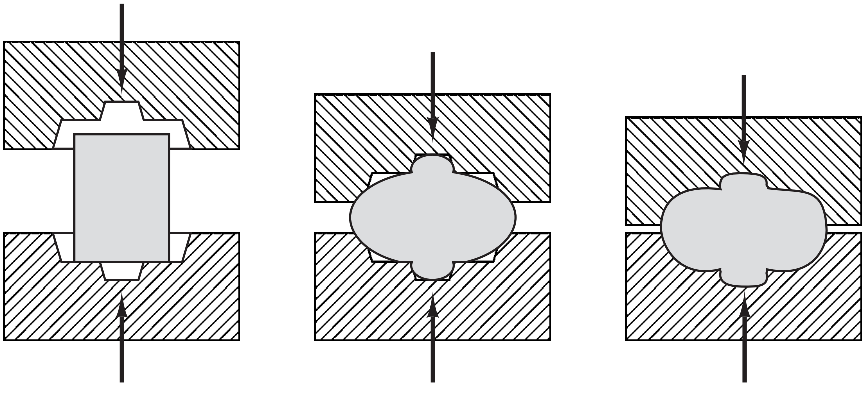

FIGURE 16-11 Schematic of the impression-die forging process, showing partial die filling and the beginning of flash formation in the center sketch and the final shape with flash in the right-hand sketch.

FIGURE 16-12 Impression drop-forging dies and the product resulting from each impression. The flash is trimmed from the finished connecting rod in a separate trimming die. The sectional view shows the grain flow resulting from the forging process. *(Courtesy of Forging Industry Association, Cleveland, OH.)*

or more blows by the upper die. The hammering causes the metal to flow and completely fill the die cavity. Excess metal is squeezed out along the parting line to form a *flash* around the periphery of the cavity. This material cools rapidly, increases in strength, and, by resisting deformation, effectively blocks the formation of additional flash. By trapping material within the die, the flash then ensures the filling of all of the cavity details. The flash is ultimately trimmed from the part in a final forging operation.

In *flashless forging*, also known as true closed-die forging, the metal is deformed in a cavity that provides total confinement. Accurate workpiece sizing is required since complete filling of the cavity must be ensured with no excess material. Accurate workpiece positioning is also necessary, along with good die design and control of lubrication. The major advantage of this approach is the elimination of the scrap generated during flash formation, an amount that is often between 20 and 45% of the starting material.

Most conventional forgings are impression-die with flash and are produced in dies with a series of cavities, where one or more blows of the hammer are used for each step in the sequence. The first impression is often an *edging*, *fullering*, or *bending* impression to distribute the metal roughly in accordance with the requirements of the later cavities. Edging gathers material into a region, while fullering moves material away. Intermediate impressions are for *blocking* the metal to approximately its final shape, with generous corner and fillet radii. For small production lots, the cost of further cavities may not be justified, and the blocker-type forgings are simply finished by machining. More often, the final shape and size are imparted by an additional forging operation in a *final* or *finisher impression*, after which the flash is trimmed from the part. Figure 16-12 shows an example of these steps and the shape of the part at the conclusion of each. Since every part is shaped in the same die cavities, each mass-produced part is a close duplicate of all the others.

Conventional closed-die forging begins with a simple hot-rolled shape and utilizes reheating and working to progressively convert it into a more complex geometry. The shape of the various cavities controls the flow of material, and the flow, in turn, imparts

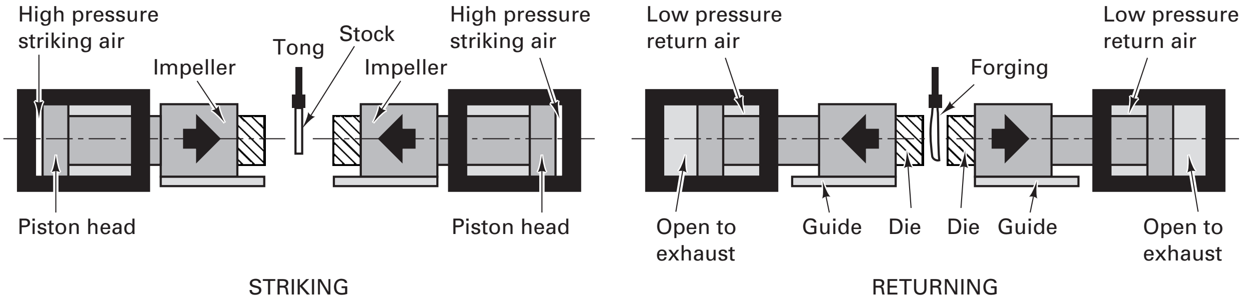

FIGURE 16-13 Schematic diagram of an impactor in the striking and returning modes. *(Courtesy of Chambersburg Engineering Company, Chambersburg, PA)*

the oriented structure discussed in Chapter 16. (Grain flow that follows the external contour of the component is in the crack-arrestor orientation, improving strength, ductility, and resistance to impact and fatigue.) Through forging, we can also control the size and shape of various cross sections, so the metal can be distributed as needed to resist the applied loads. Couple these factors with a fine recrystallized grain structure (hot working) and the absence of voids (compressive forming stresses), and we see why forgings often have about 20% higher strength-to-weight ratios compared with cast or machined parts of the same material.

Board hammers, steam hammers, and air hammers have all been used in impression-die forging. An alternative to the hammer and anvil arrangement is the *counterblow machine*, or *impactor*, illustrated in Figure 16-13. These machines have two horizontal hammers that simultaneously impact a workpiece that is positioned between them. Excess energy simply becomes recoil, in contrast to the hammer and anvil arrangement, where energy is lost to the machine foundation, and a heavy machine base is required. Impactors also operate with less noise and less vibration and produce distinctly different flows of material, as illustrated in Figure 16-14.

Heat-treatment costs can be reduced by the direct quenching or controlled cooling of the hot parts as they emerge from the forging operation. Energy conservation can also be achieved through several processes that have been designed to produce a product that is somewhere between a conventional forging and a conventional casting. In one approach, a forging preform is cast from liquid metal, removed from the mold while still hot, and then finish forged in a single-cavity die. The flash is then trimmed and the part is quenched to room temperature. Forging preforms can also be produced by the spray deposition of metal droplets into shaped containers, as described in Section 19-10. These preforms are then removed from the mold, and the final shape and properties are imparted by a final forging operation. Still another approach is semisolid forging, discussed in Chapter 13.

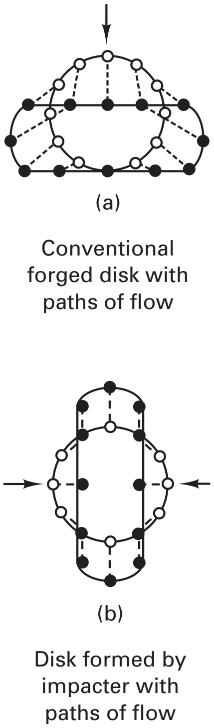
(a)

Conventional forged disk with paths of flow

(b)

Disk formed by impacter with paths of flow

FIGURE 16-14 A comparison of metal flow in conventional forging and impacting.

PRESS FORGING

In hammer or impact forging, the metal flows to dissipate the energy imparted in the hammer–workpiece collision. Speeds are high, so the forming time is short. Contact times under load are on the order of milliseconds. There is little time for heat transfer and cooling of the workpiece, and the adiabatic heating that occurs during deformation helps to minimize chilling. It is possible, however, that all of the energy can be dissipated by deformation of just the surface of the metal (coupled with additional absorption by the anvil and foundation), and the interior of the workpiece remains essentially undeformed. Consider the deformation of a metal wood-splitting wedge after it has been struck repeatedly by a sledge hammer. The top is usually "mushroomed," while the remainder retains the original geometry and taper.

If large pieces or thick products are to be formed, *press forging* may be required. The deformation is now analyzed in terms of forces or pressures (rather than energy), and the slower squeezing action penetrates completely through the metal, producing a more uniform deformation and flow. New problems can arise, however, because of the longer time of contact between the dies and the workpiece. As the surface of the workpiece cools, it becomes stronger and less ductile, and may crack if deformation is continued. Heated dies are generally used to reduce heat loss, promote surface flow, and enable the production of finer details and closer tolerances. Periodic reheating of the workpiece may also be required. If the dies are heated to the same temperature as the workpiece and pressing proceeds at a slow rate, *isothermal forging* can be used to produce near-net-shape components with uniform microstructure and mechanical properties.

Forging presses are of two basic types, mechanical and hydraulic, and are usually quite massive. *Mechanical presses* use cams, cranks, or toggles to produce a preset and reproducible stroke. Because of their mechanical drives, different forces are available at the various stroke positions. Production presses are quite fast, capable of up to 50 strokes per minute, and are available in capacities ranging from 300 to 18,000 tons (3 to 160 MN). *Hydraulic presses* move in response to fluid pressure in a piston and are generally slower, more massive, and more costly to operate. On the positive side, hydraulic presses are much more flexible and can have greater capacity. Since motion is in response to the flow of pressurized drive fluids, hydraulic presses can be programmed to have different strokes for different operations and even different speeds within a stroke. Presses can be used to perform all types of forging, including open die and impression die. Impression-die press forgings usually require less draft than drop forgings and have higher dimensional accuracy. In addition, press forgings can often be completed in a single closing of the dies as opposed to the multiple blows of a hammer. Machines with capacities up to 50,000 tons (445 MN) are currently in operation in the United States.

A third type of press is the *screw press*, which in many ways acts like a hammer. A large flywheel stores a predetermined amount of energy. This energy is then transmitted to a vertical screw, which drives a descending ram. Downward motion stops when all of the energy from the flywheel has been dissipated.

Additional information about the various types of presses and drive mechanisms can be found in the closing section of Chapter 17.

DESIGN OF IMPRESSION-DIE FORGINGS AND ASSOCIATED TOOLING

The geometrical possibilities for impression-die forging are quite numerous, with complex shapes like connecting rods, crankshafts, wrenches, and gears being commonly produced. Figure 16-15 shows a forged-and-machined steel automotive crankshaft that significantly outperformed similar components made of austempered ductile cast iron. Parts typically range from under 3 lb. up to about 750 lb., with the major dimension being between 7 and 20 in. (20 and 50 cm). Steels, stainless steels, and alloys of aluminum, copper, and nickel can all be forged with fair to excellent results.

The forging dies are usually made of high-alloy or tool steel and can be expensive to design and construct. Impact resistance, wear resistance, strength at elevated temperature, and the ability to withstand cycles of rapid heating and cooling must all be outstanding. In addition, considerable care is required to produce and maintain a smooth and accurate cavity and parting plane. Better and more economical results will be obtained if the following rules are observed:

1. The dies should part along a single, flat plane if at all possible. If not, the parting plane should follow the contour of the part.
2. The parting surface should be a plane through the center of the forging, not near an upper or lower edge.
3. Adequate draft should be provided—at least 3° for aluminum and 5° to 7° for steel.
4. Generous fillets and radii should be provided.
5. Ribs should be low and wide.
6. The various sections should be balanced to avoid extreme differences in metal flow.
7. Full advantage should be taken of fiber flow lines.
8. Dimensional tolerances should not be closer than necessary.

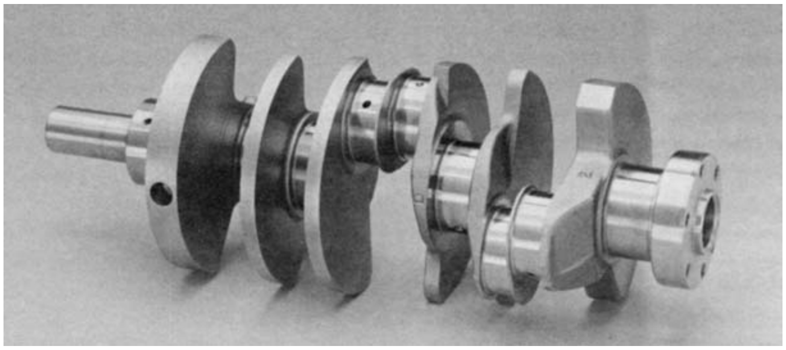

FIGURE 16-15 A forged-and-machined automobile engine crankshaft that has been formed from microalloyed steel. Performance is superior to cranks of cast ductile iron.

The various design details, such as the number of intermediate steps, the shape of each, the amount of excess metal required to ensure die filling, and the dimensions of the flash at each step, are often a matter of experience. Each component is a new design entity and brings its own unique challenges. Computer-aided design has made notable advances, however, and the development and accessibility of high-speed, immense-memory computers have enabled the accurate modeling of many complex shapes.

Good dimensional accuracy is a characteristic of impression-die forging. With reasonable care, the dimensions for steel products can be maintained within the tolerances of 0.02 to 0.03 in. (0.50 to 0.75 mm). It should be noted, however, that the dimensions across the parting plane are affected by closure of the dies and are therefore dependent on die wear and the thickness of the final flash. Dimensions contained entirely within a single die segment can be maintained at a significantly greater level of accuracy. Surface-finish values range from 80 to 300 μin. Draft angles can sometimes be reduced, occasionally approaching zero, but this is not recommended for general practice.

Selection of a lubricant is also critical to successful forging. The lubricant not only affects the friction and wear and associated metal flow, but it may also be expected to act as a thermal barrier (restricting heat flow from the workpiece to the dies) and a parting compound (preventing the part from sticking in the cavities).

UPSET FORGING

Upset forging involves increasing the diameter of a material by compressing its length. Because of its use with a myriad of fasteners, it is the most widely used of all forging processes when evaluated in terms of the number of pieces produced. Parts can be upset forged both hot and cold, with the operation generally being performed on special high-speed machines. The forging motion is usually horizontal, and the workpiece is rapidly moved from station to station. While most operations start with wire or rod, some machines can upset bars up to 25 cm (10 in.) in diameter.

Upset forging generally employs split dies that contain multiple positions or cavities, as seen in the typical die set of Figure 16-16. The dies separate enough for the bar to advance between them and move into position. They are then clamped together

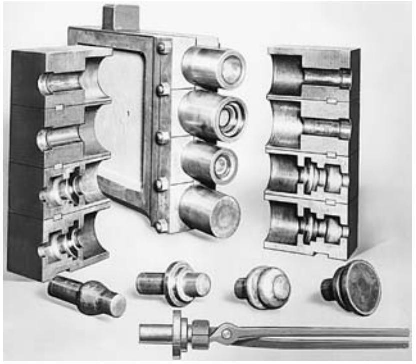

FIGURE 16-16 Set of upset-forging dies and punches. The product resulting from each of the four positions is shown along the bottom. *(Courtesy of Ajax Manufacturing Company Euclid, OH.)*

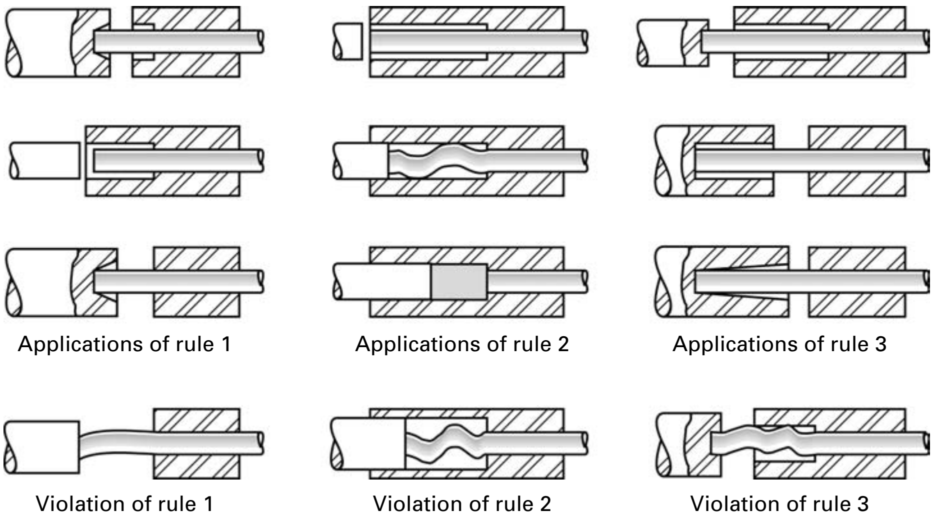

FIGURE 16-17 Schematics illustrating the rules governing upset forging. *(Courtesy of National Machinery Company, Tiffin, OH.)*

and a heading tool or ram moves longitudinally against the bar, upsetting it into the cavity. Separation of the dies then permits transfer to the next position or removal of the product. If a new piece is started with each die separation and an operation is performed in each cavity simultaneously, a finished product can be made with each cycle of the machine. By including a shearing operation as the initial piece moves into position, the process can operate with continuous coil or long-length rod as its incoming feedstock.

Upset-forging machines are often used to form heads on bolts and other fasteners as well as to shape valves, couplings, and many other small components. The upset region can be on the end or central portion of the workpiece, and the final diameter may be up to three times the original. The following three rules, illustrated in Figure 16-17, should be followed when designing parts that are to be upset forged:

1. The length of unsupported metal that can be gathered or upset in one blow without injurious buckling should be limited to three times the diameter of the bar.
2. Lengths of stock greater than three times the diameter may be upset successfully provided that the diameter of the upset is not more than 1 times the diameter of the bar.
3. In an upset requiring stock length greater than three times the diameter of the bar, and where the diameter of the cavity is not more than 1 times the diameter of the bar (the conditions of rule 2), the length of unsupported metal beyond the face of the die must not exceed the diameter of the bar.

AUTOMATIC HOT FORGING

Several equipment manufacturers now offer highly automated upset equipment in which mill-length steel bars (typically 7 m or 24 ft long) are fed into one end at room temperature and hot-forged products emerge from the other end at rates of up to 180 parts per minute (86,400 parts per eight-hour shift). These parts can be solid or hollow, round or symmetrical, up to 6 kg (12 lb) in weight, and up to 18 cm (7 in.) in diameter.

The process begins with the lowest-cost steel bar stock: hot-rolled and air-cooled carbon or alloy steel. The bar is first heated to 1200° to 1300°C (2200° to 2350°F) in under 60 seconds as it passes through high-power induction coils. It is then descaled by rolls, sheared into individual blanks, and transferred through several successive forming stages, during which it is upset, preformed, final forged, and pierced (if necessary). Small parts can be produced at up to 180 parts per minute, and larger parts at rates on the order of 90 parts per minute. Figure 16-18 shows a typical deformation sequence and a variety of hot-forged ferrous products.

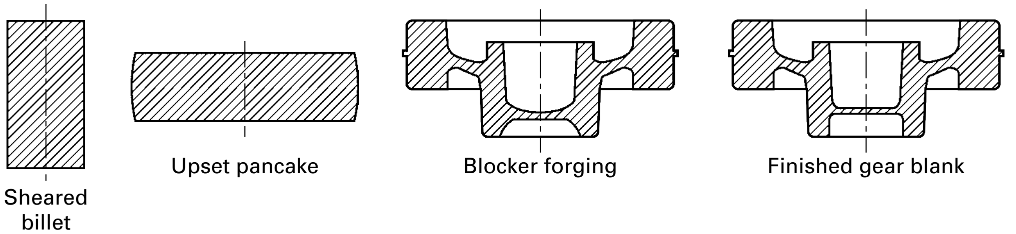

(a)

(b)

FIGURE 16-18 (a) Typical four-step sequence to produce a spur-gear forging by automatic hot forging. The sheared billet is progressively shaped into an upset pancake, blocker forging, and finished gear blank. (b) Samples of ferrous parts produced by automatic hot forging at rates between 90 and 180 parts per minute. *(Courtesy of National Machinery Company, Tiffin, OH.)*

The *automatic hot-forging* process has a number of attractive features. Low-cost input material and high production speeds have already been cited. Minimum labor is required, and since no flash is produced, material usage can be as much as 20 to 30% greater than with conventional forging. With a consistent finishing temperature near 1050°C (1900°F), an air cool can often produce a structure suitable for machining, eliminating the need for an additional anneal or normalizing treatment. Tolerances are generally within 0.3 mm (0.012 in.), surfaces are clean, and draft angles need only be 0.5 to 1° (as opposed to the conventional 3° to 5°). Tool life is nearly double that of conventional forging because the contact times are only on the order of $\frac{6}{100}$ of a second.

Automatic hot formers can also be coupled with high-rate, cold-forming operations. Preform shapes can be hot formed at rates that approach 180 parts per minute. These products can then be cold formed to final shape on machines that operate at speeds near 90 parts per minute. The benefits of the combined operations include high-volume production at low cost, coupled with the precision, surface finish, and strain hardening that are characteristic of a cold-finished material.

To justify an automatic hot-forging operation, however, large quantities of a given product must be required. A single production line may well require an initial investment in excess of $10 million.

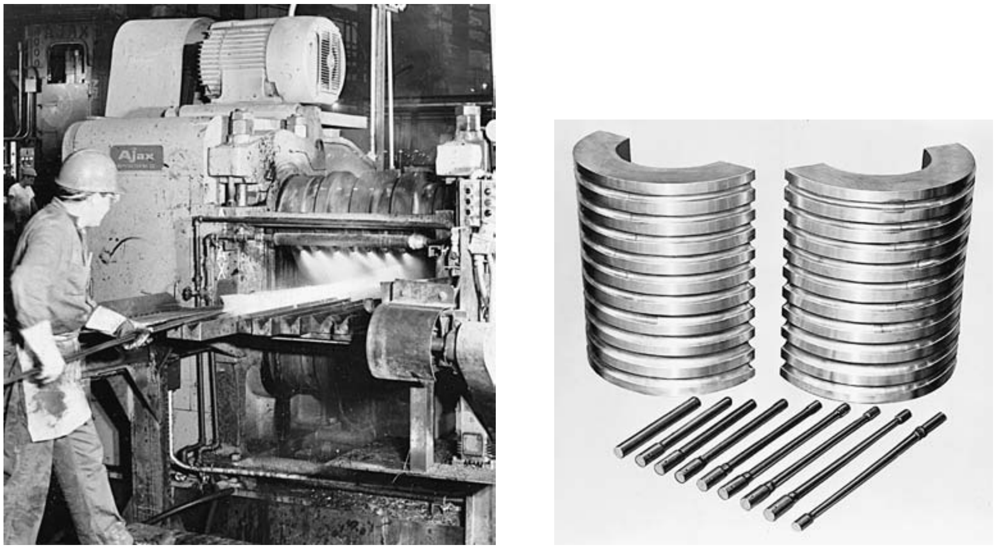

FIGURE 16-19 (Left) Roll-forging machine in operation. (Right) Rolls from a roll-forging machine and the various stages in roll forging a part. *(Courtesy of Ajax Manufacturing Company, Euclid, OH.)*

ROLL FORGING

In *roll forging*, round or flat bar stock is reduced in thickness and increased in length to produce such products as axles, tapered levers, and leaf springs. As illustrated in Figure 16-19, roll forging is performed on machines that have two cylindrical or semicylindrical rolls, each containing one or more shaped grooves. A heated bar is inserted between the rolls. When the bar encounters a stop, the rolls rotate, and the bar is progressively shaped as it is rolled out toward the operator. The piece is then transferred to the next set of grooves (or rotated and reinserted in the same groove), and the process repeats until the desired size and shape are produced. Figure 16-19 also shows a set of rolls and the product formed by each set of grooves. Figure 16-20 shows the cross section of one set of grooves and a piece being formed. In most cases there is no flash, and the oriented structure imparts favorable forging-type properties.

SWAGING

Swaging (also known as rotary swaging or radial forging) uses external hammering to reduce the diameter or produce tapers or points on round bars or tubes. Figure 16-21 shows a typical swaging machine, and Figure 16-22 shows a schematic of its internal components. The dies, located in the center of the apparatus, consist of two blocks of

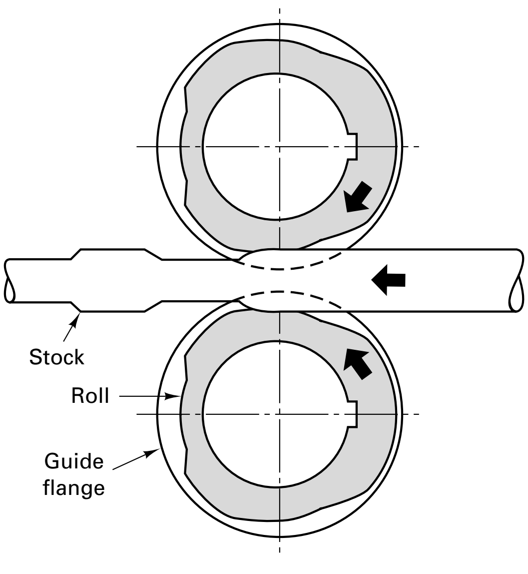

FIGURE 16-20 Schematic of the roll-forging process showing the two shaped rolls and the stock being formed. *(Courtesy of Forging Industry Association, Cleveland, OH.)*

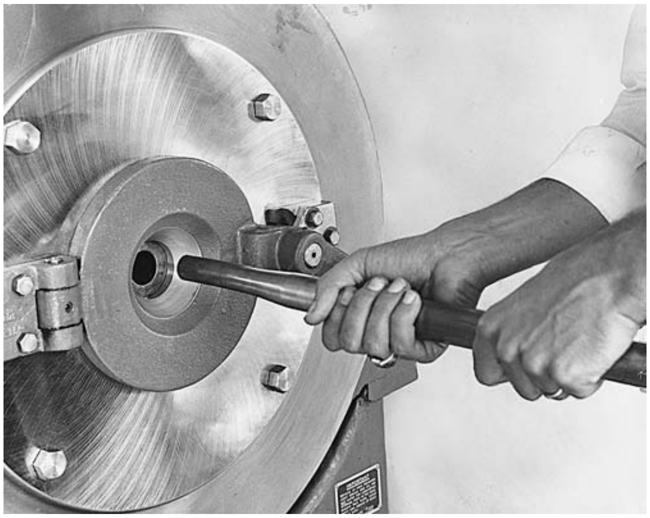

FIGURE 16-21 Tube being reduced in a rotary swaging machine. *(Courtesy of the Timkin Company, Canton, OH.)*

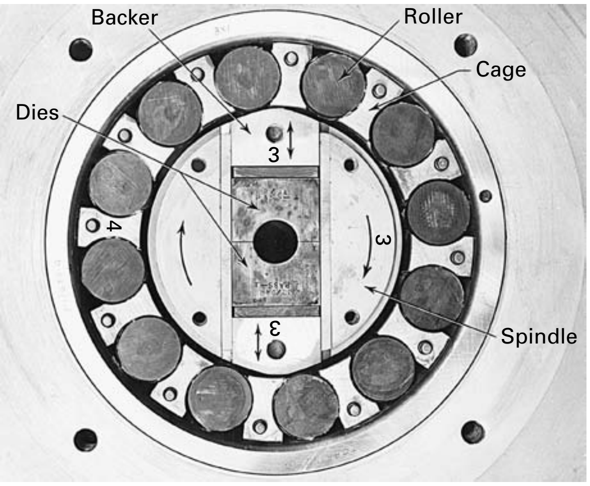

FIGURE 16-22 Basic components and motions of a rotary swaging machine. (*Note:* The cover plate has been removed to reveal the interior workings.) *(Courtesy of the Timkin Company, Canton, OH.)*

hardened tool steel. They combine to form a central hole that generally has a conical input transitioning to a cylinder. An external motor drives a large, massive flywheel, which is connected to the central spindle of the machine. High-speed rotation of the central unit generates centrifugal force, which causes the matching die segments and backing blocks to separate. As the spindle rotates, the backing blocks are driven into opposing rollers that have been mounted in a massive machine housing. To pass beneath the rollers, the backer blocks must squeeze the dies tightly together. Once the assembly clears the rollers, the dies once again separate and the cycle repeats, generating between 1000 and 3000 blows per minute.

With the machine in motion, the operator simply inserts a rod or tube between the dies and advances it during the periods of die separation. Because the dies rotate, the repeated blows are delivered from various angles, reducing the diameter and increasing the length. Since the rotating spindle is usually hollow, the workpiece can be passed completely through the machine or withdrawn after a preset length has been reduced.

Swaging operations can also be used to form tubular products with internal cavities of constant cross section. A shaped mandrel is inserted into a thick-walled tube (or hollow-end workpiece), and the metal is collapsed around it to simultaneously shape and size both the interior and exterior of the product. Swaging over a mandrel can be

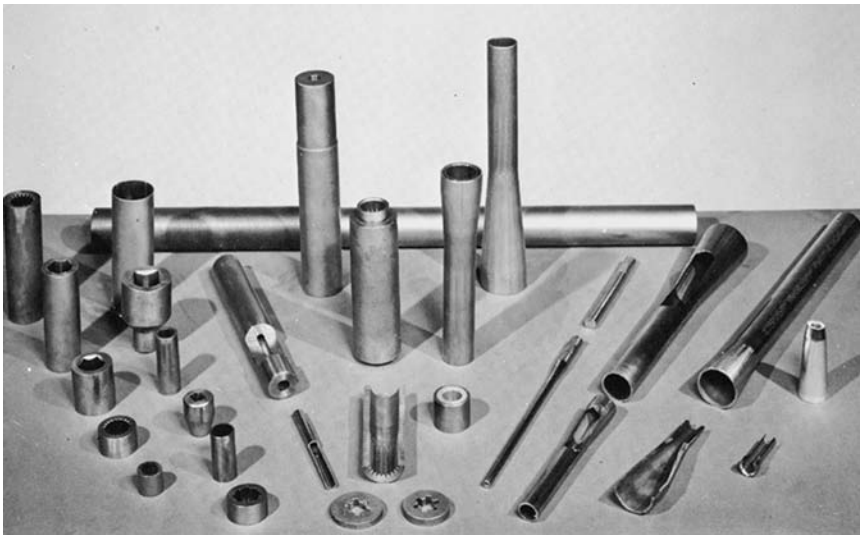

FIGURE 16-23 A variety of swaged parts, some with internal details. *(Courtesy of Cincinnati Milacron, Inc., Cincinnati, OH.)*

used to form parts with internal gears, splines, recesses, or sockets. Figure 16-23 shows a variety of swaged products, many of which contain shaped holes.

The term *swaging* has also been applied to a process where material is forced into a confining die to reduce its diameter. This process is usually performed on heated material. Figure 16-24 shows a hot-swaging sequence being used to form the end of a pressurized gas cylinder.

NET-SHAPE AND NEAR-NET-SHAPE FORGING

As much as 80% of the cost of a forged gear can be incurred during the machining operations that follow forging, and a finished aerospace wing spar may contain as little as 4% of the original billet (the remaining 96% being lost as scrap in the forging and subsequent machining operations). To minimize both the expense and waste, considerable effort has been made to develop processes that can form parts close enough to final dimensions that little or no final machining is required. These are known as *net-shape*, or *near-net-shape*, operations and may also be referred to as *precision forging*. Cost savings often result from the reduction or elimination of secondary machining (and the associated handling, positioning, and fixturing), the companion reduction in scrap, and an overall decrease in the amount of energy required to produce the product.

Precision or near-net-shape forgings can now be produced with draft angles of less than 1° (or even zero draft). Complex shapes can be forged with such close tolerances that little or no finish machining is required. Since the design and implementation of net-shape processing can be rather expensive, application is usually reserved for parts where a significant cost reduction can be achieved.

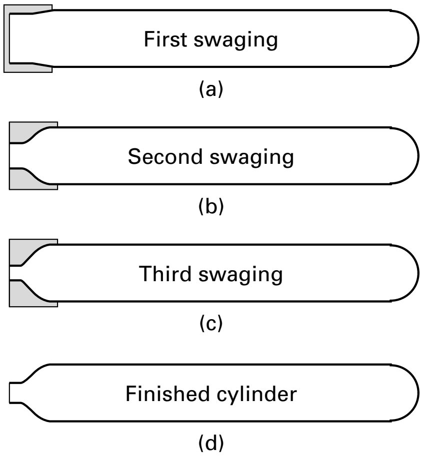

FIGURE 16-24 Steps in swaging a tube to form the neck of a gas cylinder. *(Courtesy of United States Steel Corp., Pittsburgh, PA.)*

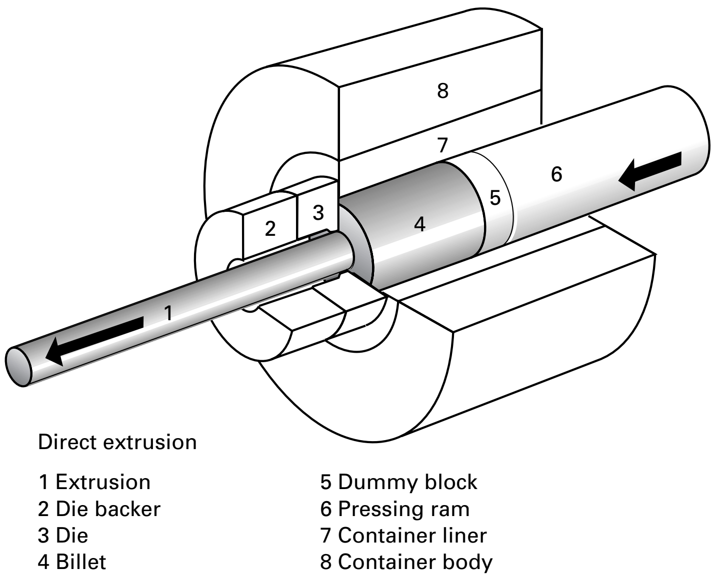

FIGURE 16-25 Direct extrusion schematic showing the various equipment components. *(Courtesy of Danieli Wean United, Cranberry Township, PA.)*

16.6 EXTRUSION

In the *extrusion* process, metal is compressed and forced to flow through a suitably shaped die to form a product with reduced but constant cross section. Although extrusion may be performed either hot or cold, hot extrusion is commonly employed for many metals to reduce the forces required, eliminate cold-working effects, and reduce directional properties. Basically, the extrusion process is like squeezing toothpaste out of a tube. In the case of metals, a common arrangement is to have a heated billet placed inside a confining chamber. A ram advances from one end, causing the billet to first upset and conform to the confining chamber. As the ram continues to advance, the pressure builds until the material flows plastically through the die and *extrudes*, as depicted in Figure 16-25. The stress state within the material is one of triaxial compression.

Aluminum, magnesium, copper, lead, and alloys of these metals are commonly extruded, taking advantage of the relatively low yield strengths and low hot-working temperatures. Steels, stainless steels, nickel-based alloys, and titanium are far more difficult to extrude. Their yield strengths are high, and the metals tend to weld to the walls of the die and confining chamber under the required conditions of temperature and pressure. With the development and use of phosphate-based and molten glass lubricants, however, hot extrusions can be routinely produced from these high-strength, high-temperature metals. These lubricants are able to withstand the required temperatures and adhere to the billet, flowing and thinning in a way that prevents metal-to-metal contact throughout the process.

As shown in the left-hand segment of Figure 16-26, almost any cross-sectional shape can be extruded from the nonferrous metals. Size limitations are few because

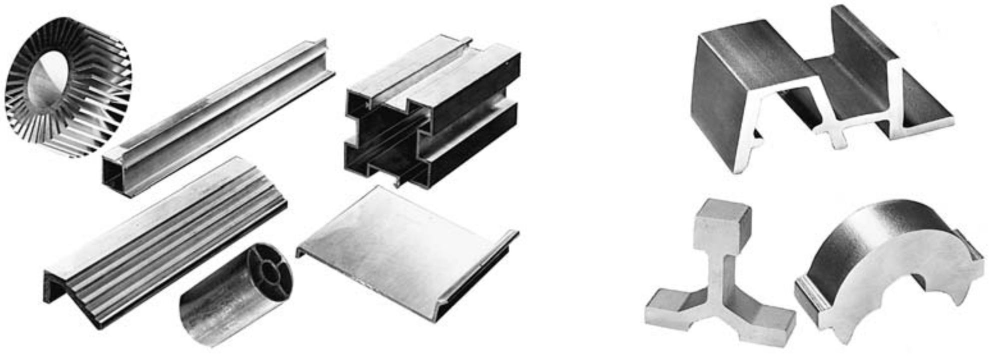

FIGURE 16-26 Typical shapes produced by extrusion. (Left) Aluminum products. *(Courtesy of Aluminum Company of America, Pittsburgh, PA.)* (Right) Steel products. *(Courtesy of Allegheny Ludlum Steel Corporation, Pittsburgh, PA.)*

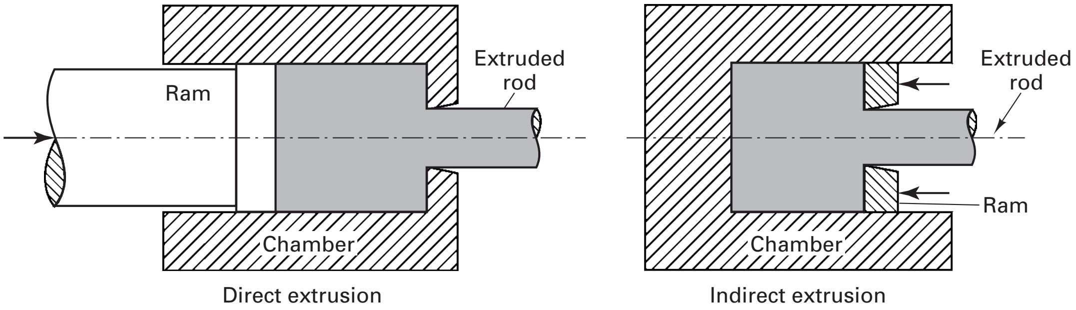

FIGURE 16-27 Direct and indirect extrusion. In direct extrusion, the ram and billet both move and friction between the billet and the chamber opposes forward motion. For indirect extrusion, the billet is stationary. There is no billet–chamber friction, since there is no relative motion.

presses are now available that can extrude any shape that can be enclosed within a circle of 75-cm (30-in.) diameter. In the case of steels and the other high-strength metals, the shapes and sizes are a bit more limited, but, as the right-hand segment of Figure 16-26 shows, considerable freedom still exists.

Extrusion has a number of attractive features. Many shapes can be produced as extrusions that are not possible by rolling, such as ones containing reentrant angles or longitudinal holes. No draft is required, so extrusions can offer savings in both metal and weight. Since the deformation is compressive, the amount of reduction in a single step is limited only by the capacity of the equipment. Billet-to-product cross-sectional area ratios can be in excess of 100-to-1 for the weaker metals. In addition, extrusion dies can be relatively inexpensive, and one die may be all that is required to produce a given product. Conversion from one product to another requires only a single die change, so small quantities of a desired shape can be produced economically. The major limitation of the process is the requirement that the cross section be uniform for the entire length of the product.

Extruded products have good surface finish and dimensional precision. For most shapes, tolerances of 0.003 cm/cm or in./in. with a minimum of 0.075 mm (0.003 in.) are easily attainable. Grain structure is typical of other hot-worked metals, but strong directional properties (longitudinal versus transverse) are usually observed. Standard product lengths are about 6 to 7 m (20 to 24 ft), but lengths in excess of 12 m (40 ft) have been produced. Since little scrap is generated, billet-to-product yields are rather high.

EXTRUSION METHODS

Extrusions can be produced by various techniques and equipment configurations. Hot extrusion is usually done by either the direct or indirect method, both of which are illustrated in Figure 16-27. In *direct extrusion*, a solid ram drives the entire billet to and through a stationary die and must provide additional power to overcome the frictional resistance between the surface of the moving billet and the confining chamber. With *indirect extrusion*, also called reverse, backward, or inverted extrusion, a hollow ram pushes the die back through a stationary, confined billet. Since there is no relative motion, friction between the billet and the chamber is eliminated. The required force is lower, and longer billets can be used with no penalty in power or efficiency.

Figure 16-28 shows the ram force versus ram position curves for both direct and indirect extrusion. The areas below the lines have units of newton-meters or foot-pounds, and are therefore proportional to the work required to produce the part. The area between the two curves is the work required to overcome the billet–chamber friction during direct extrusion, an amount that can be saved by converting to indirect extrusion. Unfortunately, the added complexity of the indirect process (applying force through a hollow ram, extracting the product through the hollow, and removing residual billet material at the end of the stroke) serves to increase the purchase price and maintenance cost of the required equipment.

With either process, the speeds of hot extrusion are usually rather fast, so as to minimize the cooling of the billet within the chamber. Extruded products can emerge at rates up to 300 m/min (1000 ft/min). The extrusion speed may be restricted, however, by

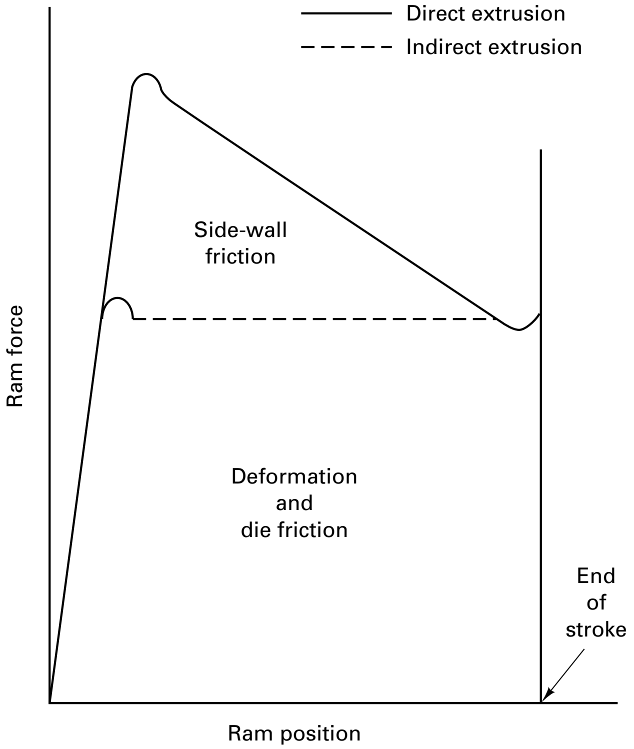

FIGURE 16-28 Diagram of the ram force versus ram position for both direct and indirect extrusion of the same product. The area under the curve corresponds to the amount of work (force × distance) performed. The difference between the two curves is attributed to billet–chamber friction.

the large amounts of heat that are generated by the massive deformation and the associated rise in temperature. Sensors are often used to monitor the temperature of the emerging product and feed this information back to a control system. For materials whose properties are not sensitive to strain rate, ram speed may be maintained at the highest level that will keep the product temperature below some predetermined value.

Lubrication is another important area of concern. If the reduction ratio (cross section of billet to cross section of product) is 100, the product will be 100 times longer than the starting billet. If the product has a complex cross section, its perimeter can be significantly greater than a circle of equivalent area. Since the surface area of the product is the length times the perimeter, this value can be more than an order of magnitude greater than the surface area of the original billet. A lubricant that is applied to the starting piece must thin considerably as the material passes through the die and is converted to product. An acceptable lubricant is expected to reduce friction and act as a barrier to heat transfer at all stages of the process.

METAL FLOW IN EXTRUSION

The flow of metal during extrusion is often complex, and some care must be exercised to prevent surface cracks, interior cracks, and other flow-related defects. Metal near the center of the chamber can often pass through the die with little distortion, while metal near the surface undergoes considerable shearing. In direct extrusion, friction between the forward-moving billet and both the stationary chamber and die serves to further impede surface flow. The result is often a deformation pattern similar to the one shown in Figure 16-29. If the surface regions of the billet undergo excessive cooling, surface deformation is further impeded, often leading to the formation of surface cracks. If quality is to be maintained, process control must be exercised in the areas of design, lubrication, extrusion speed, and temperature.

EXTRUSION OF HOLLOW SHAPES

Hollow shapes, and shapes with multiple longitudinal cavities, can be extruded by several methods. For tubular products, the stationary or moving *mandrel* processes of Figure 16-30 are quite common. The die forms the outer profile, while the mandrel shapes and sizes the interior.

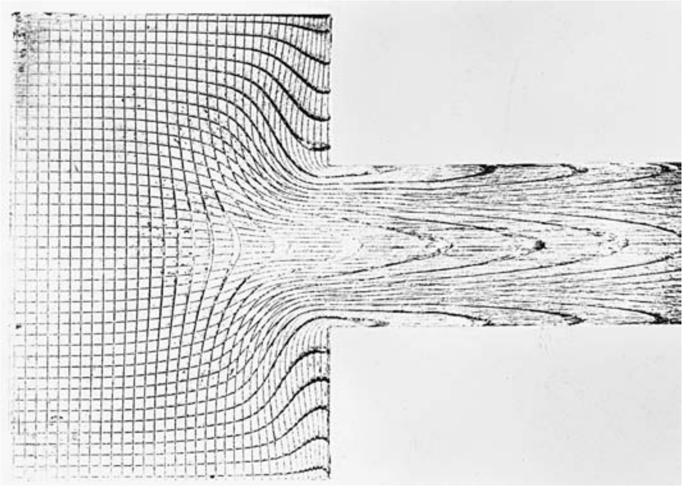

FIGURE 16-29 Grid pattern showing the metal flow in a direct extrusion. The billet was sectioned and the grid pattern was engraved prior to extrusion.

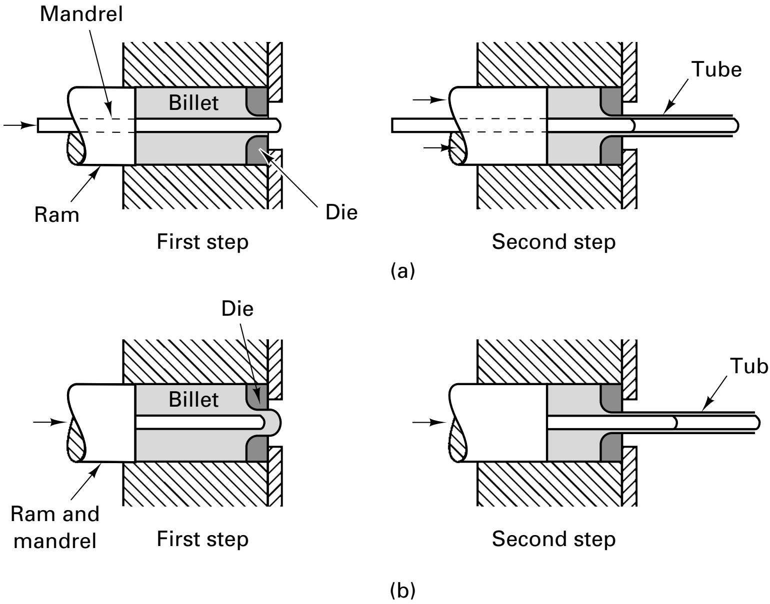

FIGURE 16-30 Two methods of extruding hollow shapes using internal mandrels. In part (a) the mandrel and ram have independent motions; in part (b) they move as a single unit.

For products with multiple or more complex cavities, a *spider-mandrel* die (also known as a porthole, bridge, or torpedo die) may be required. As illustrated in Figure 16-31, metal flows around the arms of a "spider," and a further reduction then forces the material back together. Since the metal is never exposed to contamination, perfect welds result. Unfortunately, lubricants cannot be used since they will contaminate the surfaces to be welded. The process is therefore limited to materials that can be extruded without lubrication and can also be easily pressure welded.

Since additional tooling is required, hollow extrusions will obviously cost more than solid ones, but a wide variety of continuous cross-section shapes can be produced that cannot be made economically by any other process.

HYDROSTATIC EXTRUSION

Another type of extrusion, known as *hydrostatic extrusion*, is illustrated schematically in Figure 16-32. Here high-pressure fluid surrounds the workpiece and applies the force necessary to extrude it through the die. The product emerges into either atmospheric pressure or a lower-pressure fluid-filled chamber. The process resembles direct extrusion, but the pressurized fluid surrounding the billet prevents any upsetting. Since the billet does not come into contact with the surrounding chamber, billet–chamber friction is eliminated. In addition, the pressurized fluid can also emerge between the billet and the die, acting in the form of a lubricant.

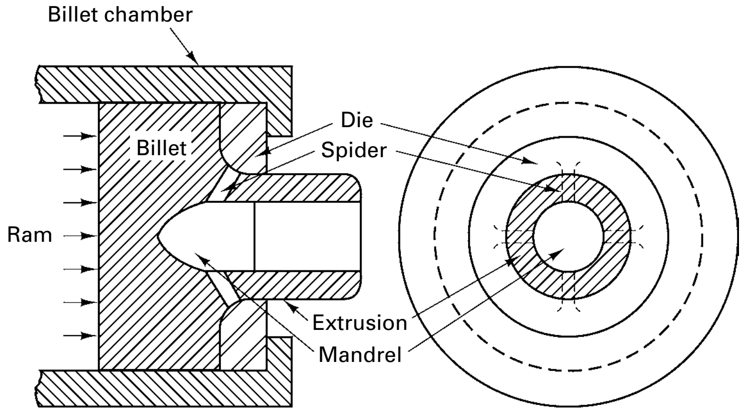

FIGURE 16-31 Hot extrusion of a hollow shape using a spider-mandrel die. Note the four arms connecting the external die and the central mandrel.

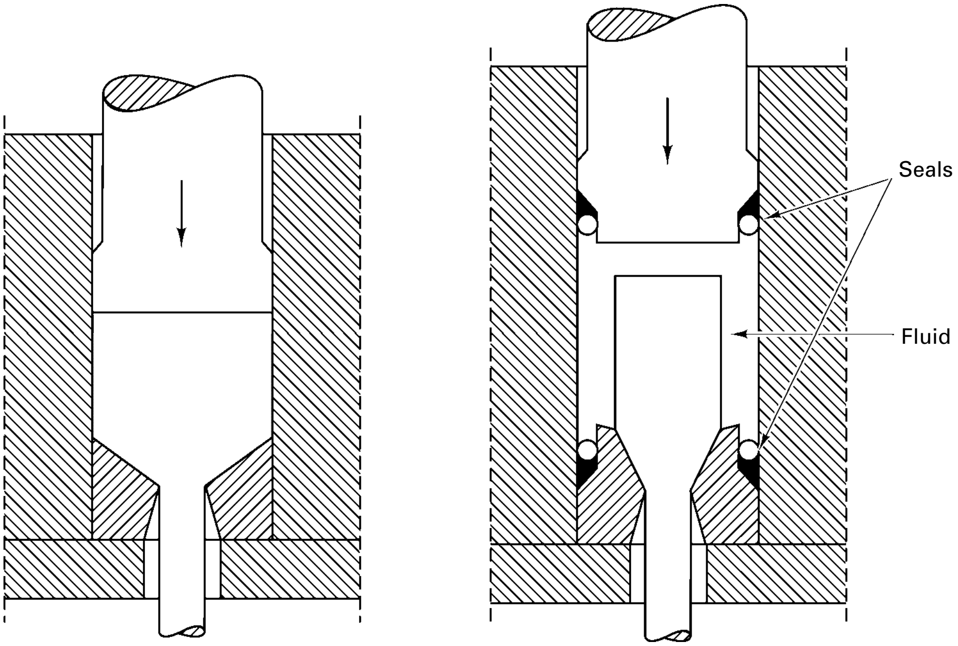

FIGURE 16-32 Comparison of conventional (left) and hydrostatic (right) extrusion. Note the addition of the pressurizing fluid and the O-ring and miter-ring seals on both the die and ram.

While the efficiency can be significantly greater than most other extrusion processes, there are problems related to the fluid and the associated high pressures (which typically range between 900 and 1700 MPa or 125 to 250 ksi). Temperatures are limited since the fluid acts as a heat sink, and many of the pressurizing fluids (typically light hydrocarbons and oils) burn or decompose at moderately low temperatures. Seals must be designed to contain the pressurized fluid without leaking, and measures must be taken to prevent the complete ejection of the product, often referred to as *blowout*. Because of these features, hydrostatic extrusion is usually employed only where the process offers unique advantages that cannot be duplicated by the more conventional methods.

Pressure-to-pressure extrusion is one of the unique capabilities. In this variant, the product emerges from one pressurized chamber into a second high-pressure chamber. In effect, the metal deformation is performed in a highly compressed environment. Crack formation begins with void formation, void growth, and void coalescence. Since voids are suppressed in a compressed environment, the result is a phenomenon known as *pressure-induced ductility*. Relatively brittle materials such as molybdenum, beryllium, tungsten, and various intermetallic compounds can be plastically deformed without fracture, and materials with limited ductility become highly formable. Products can be made that could not be otherwise produced, and materials can be considered that would otherwise have been rejected because of their limited ductility at room temperature and atmospheric pressure.

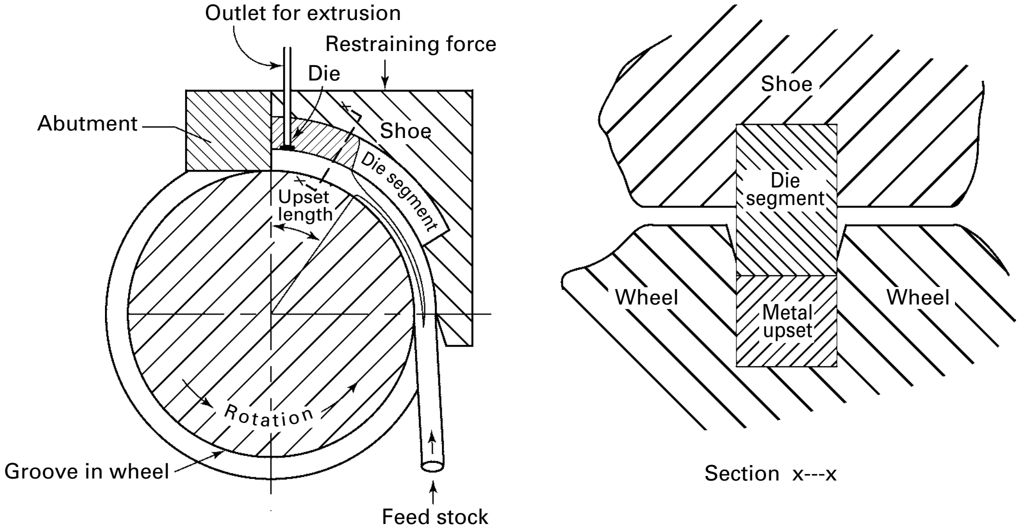

FIGURE 16-33 Cross-sectional schematic of the Conform continuous extrusion process. The material upsets at the abutment and extrudes. Section x—x shows the material in the shoe.

CONTINUOUS EXTRUSION

Conventional extrusion is a discontinuous process, converting finite-length billets into finite-length products. If the pushing force could be applied to the periphery of the feedstock, rather than the back, continuous feedstock could be converted into continuous product, and the process could become one of *continuous extrusion*. The first continuous extrusion of solid metal feedstock was performed in 1970. Since then, a number of techniques have been proposed with varying degrees of success. In terms of commercial application, the most significant is probably the *Conform process*, illustrated schematically in Figure 16-33. Continuous feedstock is inserted into a grooved wheel and is driven by surface friction into a chamber created by a mating die segment. Upon impacting a protruding abutment, the material upsets to conform to the chamber, and the increased wall contact further increases the driving friction. Upsetting continues until the pressure reaches a value sufficient to extrude the material through a die opening that has been provided in either the shoe or abutment. At this point, the rate of material entering the machine equals the rate of product emerging, and a steady-state continuous process is established.

Since surface friction is the propulsion force, the feedstock can take a variety of forms, including solid rod, metal powder, punchouts from other forming operations, or chips from machining. Metallic and nonmetallic powders can be intimately mixed and co-extruded. Rapidly solidified material can be extruded without exposure to the elevated temperatures that would harm the properties. Polymeric materials and even fiber-reinforced plastics have been successfully extruded. The most common feed, however, is coiled aluminum or copper rod.

Continuous extrusion complements and competes with wire drawing and shape rolling as a means of producing nonferrous products with small, but uniform, cross sections. It is particularly attractive for complex profiles and cross sections that contain one or more holes. Since extrusion operations can perform massive reductions through a single die, one Conform operation can produce an amount of deformation equivalent to 10 conventional drawing or cold-rolling passes. In addition, sufficient heat can be generated by the deformation that the product will emerge in an annealed condition, ready for further processing without intermediate heat treatment.

■ 16.7 WIRE, ROD, AND TUBE DRAWING

Wire-, rod-, and tube-drawing operations reduce the cross section of a material by pulling it through a die. In many ways, the processes are similar to extrusion, but the applied stresses are now tensile, pulling on the product rather than pushing on the workpiece. *Rod* or *bar*

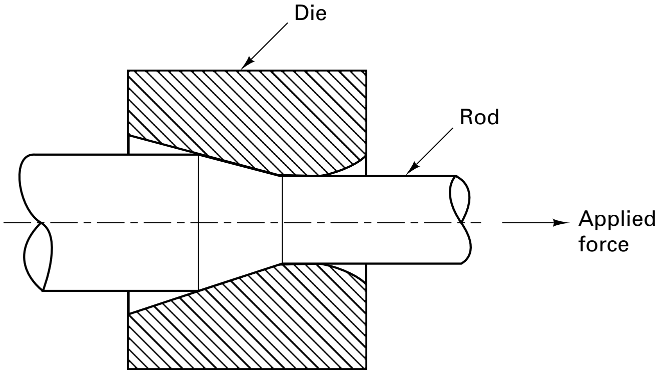

FIGURE 16-34 Schematic diagram of the rod- or bar-drawing process.

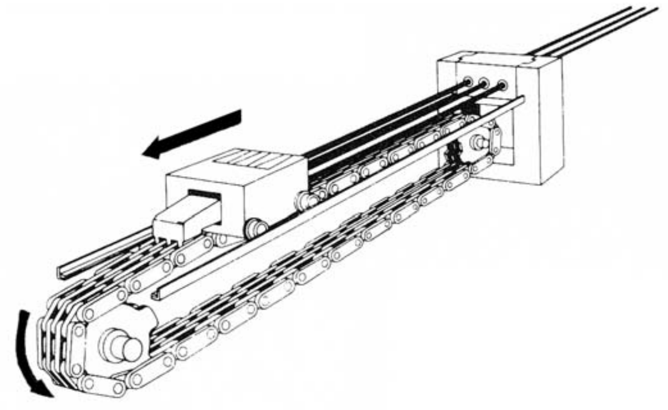

FIGURE 16-35 Diagram of a chain-driven multiple-die-draw bench used to produce finite lengths of straight rod or tube. *(Courtesy of Danieli Wean United, Cranberry Township, PA.)*

drawing, illustrated schematically in Figure 16-34, is probably the simplest of these operations. One end of a rod is reduced or pointed, so that it can pass through a die of somewhat smaller cross section. The protruding material is then placed in grips and pulled in tension, drawing the remainder of the rod through the die. The rods reduce in section, elongate, and become stronger (strain harden). Since the product cannot be readily bent or coiled, straight-pull *draw benches* are generally employed with finite-length feedstock. Hydraulic cylinders can be used to provide the pull for short-length products, while chain drives, as depicted in Figure 16-35, can be used to draw products up to 30 m (100 ft) in length.

The reduction in area is usually restricted to between 20 and 50%, since higher values require higher pulling forces that may exceed the tensile strength of the reduced product. To produce a desired size or shape, multiple draws may be required through a series of progressively smaller dies. Intermediate anneals may also be required to restore ductility and enable further deformation.

Tube drawing can be used to produce high-quality tubing where the product requires the smooth surfaces, thin walls, accurate dimensions, and added strength (from the strain hardening) that are characteristic of cold forming. Internal mandrels are often used to control the inside diameter of tubes, which range from about 12 to 250 mm (0.5 to 10 in.) in diameter. As shown in Figure 16-36, these mandrels are inserted through the incoming stock and are held in place during the drawing operation.

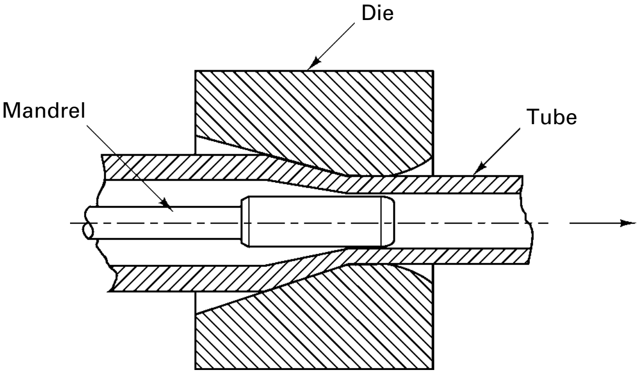

FIGURE 16-36 Cold-drawing smaller tubing from larger tubing. The die sets the outer dimension while the stationary mandrel sizes the inner diameter.

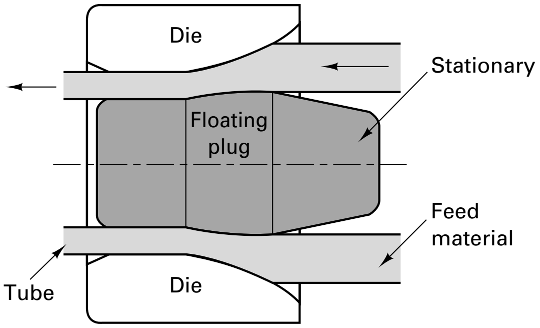

FIGURE 16-37 Tube drawing with a floating plug.

Thick-walled tubes and those less than 12 mm (0.5 in.) in diameter are often drawn without a mandrel in a process known as *tube sinking*. Precise control of the inner diameter is sacrificed in exchange for process simplicity and the ability to draw long lengths of product. If a controlled internal diameter must be produced in a long-length product, it is possible to utilize a *floating plug*, like the one shown in Figure 16-37. This plug must be designed for the specific conditions of material, reduction, and friction. If the friction on the plug surface is too great, the flowing tube will pull it too far forward, pinching off or fracturing the tube wall. If the amount of friction is insufficient, the plug will chatter or vibrate within the tube and will not assume a stable position. If properly designed, the floating plug will assume a stable position within the die, and size the internal diameter, while the external die shapes and sizes the outside of the tube.

The drawing of bar stock can also be used to make products with shaped cross sections. By using cold drawing instead of hot extrusion, the material emerges with precise dimensions and excellent surface finish. Inexpensive materials strengthened by strain hardening can often replace stronger alloys or ones that would require additional heat treatment. Small parts with complex but constant cross sections can be economically made by sectioning long lengths of cold-drawn shaped bars to produce the individual products. Steels, copper alloys, and aluminum alloys have all been cold drawn into shaped bars.

Wire drawing is essentially the same process as bar drawing except that it involves smaller-diameter material. Because the material can now be coiled, the process can be conducted in a somewhat continuous manner on rotating draw blocks, like the one illustrated schematically in Figure 16-38. Wire drawing usually begins with large coils of hot-rolled rod stock approximately 9 mm ($\frac{3}{8}$ in.) in diameter. After descaling or other forms of surface preparation, one end of the coil is pointed, fed through a die, gripped, and the drawing process begins.

Wire dies generally have a configuration similar to the one shown in Figure 16-39. The contact regions are usually made of wear-resistant tungsten carbide or polycrystalline, manufactured diamond. Single-crystal diamonds can be used for the drawing of very fine wire, and wear-resistant and low-friction coatings can be applied to the various

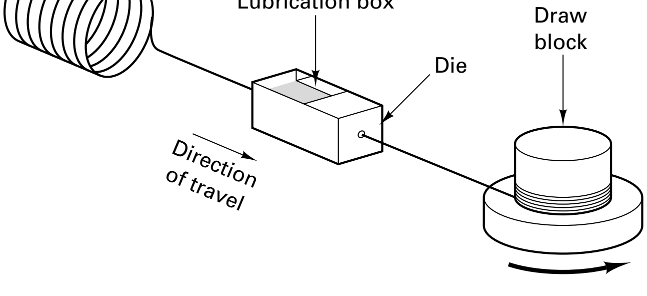

FIGURE 16-38 Schematic of wire drawing with a rotating draw block. The rotating motor on the draw block provides a continuous pull on the incoming wire.

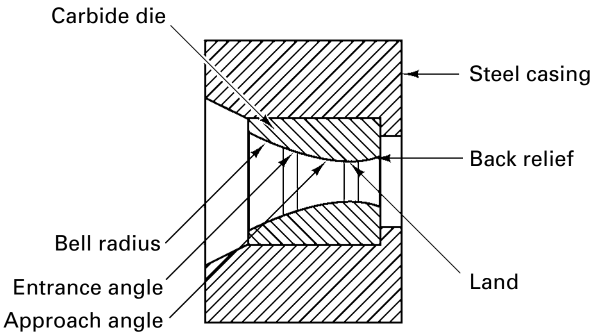

FIGURE 16-39 Cross section through a typical carbide wire-drawing die showing the characteristic regions of the contour.

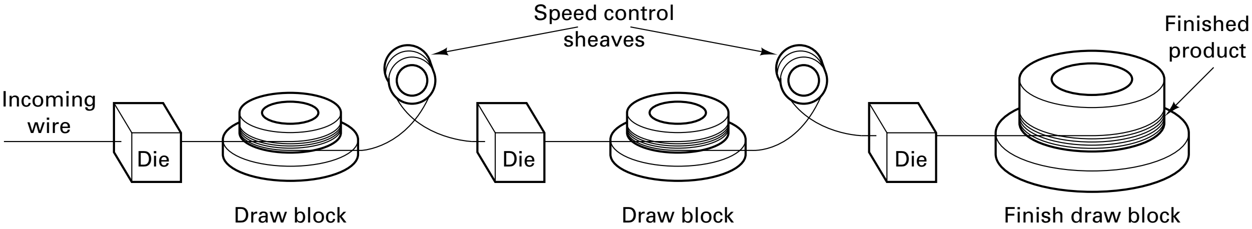

FIGURE 16-40 Schematic of a multistation synchronized wire-drawing machine. To prevent accumulation or breakage, it is necessary to ensure that the same volume of material passes through each station in a given time. The loops around the sheaves between the stations use wire tensions and feedback electronics to provide the necessary speed control.

die material substrates. Lubrication boxes often precede the individual dies to help reduce friction drag and prevent wear of the dies.

Because the tensile load is applied to the already reduced product, the amount of reduction is severely limited. Multiple draws are usually required to affect any significant change in size. To convert hot-rolled rod stock to the fine wire that is used in household telephone lines requires passes through as many as 20 or 30 individual dies. To minimize handling and labor, these operations are usually performed on tandem machines, like the one shown schematically in Figure 16-40. Between 3 and 12 dies are mounted in a single machine, and the material moves continuously from one station to another in a synchronized manner that prevents any localized accumulation or tension that might induce fracture.

After passing through all the dies in a tandem machine, the material usually requires an intermediate anneal before it can be subjected to further deformation. By controlling the placement of the last anneal so the final product has a selected amount of cold work, wires can be made with a wide range of strengths (or tempers). When maximum ductility and conductivity are desired, the wire should be annealed in controlled-atmosphere furnaces after the final draw.

■ 16.8 COLD FORMING, COLD FORGING, AND IMPACT EXTRUSION

Large quantities of products are now being made by *cold forming*, a family of processes in which slugs of material are squeezed into or extruded from shaped die cavities to produce finished parts of precise shape and size. Workpiece temperature varies from room temperature to several hundred degrees Fahrenheit.

Cold heading is a form of the previously discussed upset forging. As illustrated in Figure 16-41, it is used for making enlarged sections on the ends of rod or wire, such as the heads of nails, bolts, rivets, or other fasteners. Two variations of the process are

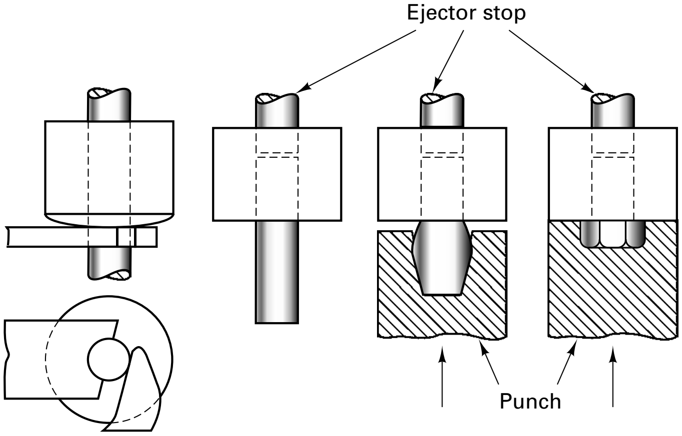

FIGURE 16-41 Typical steps in a shearing and cold-heading operation.

common. In the first, a piece of rod is first sheared to a preset length and then transferred to a holder–ejector assembly. Heading punches then strike one or more blows on the exposed end to perform the upsetting. If intermediate shapes are required, the piece is transferred from station to station, or the various heading punches sequentially rotate into position. When the heading is completed, the ejector stop advances and expels the product. In the second variation, a continuous rod (or wire) is fed forward to produce a preset extension, clamped, and the head is formed. The rod is then advanced to a second preset length and sheared, and the cycle repeats. This procedure is particularly attractive for producing nails, since the point can be formed in the shearing or cutoff operation. Enlarged sections can also be produced at locations other than the ends of a rod or wire, in the manner illustrated in Figure 16-42.

While cold heading generally produces symmetrical parts, the expanded regions can also be square, hexagonal, or even offset. Production speeds tend to vary with the diameter of the incoming material. When the blanks are less than 6 mm (0.25 in.) in diameter, speeds of 400 to 600 pieces per minute are typical. For larger diameters, the speeds may reduce to 40 to 100 pieces per minute. Alloys of aluminum and copper have excellent formability, while mild steel and stainless steel are rated fair to good. Alloy steels are a bit more difficult because of their higher strength and lower ductility.

A variety of extrusion operations, commonly called *impact extrusion*, can also be incorporated into cold forming. In these processes, a metal slug of predetermined size is positioned in a die cavity, where it is struck a single blow by a rapidly moving punch. The metal may flow forward through the die, backward around the punch, or in a combination mode. Figure 16-43 illustrates the *forward* and *backward* variations, using both open and closed dies. In forward extrusion, the diameter is decreased while the length increases. Backward extrusion shapes hollow parts with a solid bottom. The punch controls the inside shape, while the die shapes the exterior. The wall thickness is determined by the clearance between the punch and die, and the bottom thickness is set by the stop position of the punch. Figure 16-44 provides additional schematics of forward, backward, and combination impacting. Typical production speeds range from 20 to 60 strokes per minute.

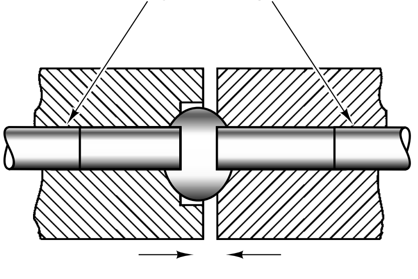

FIGURE 16-42 Method of upsetting the center portion of a rod. The stock is supported in both dies during upsetting.

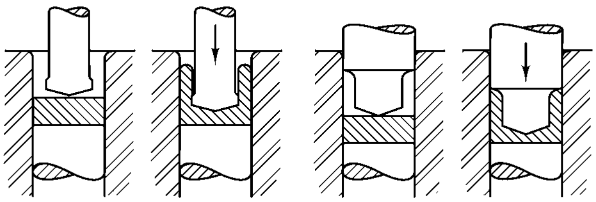

Backward extrusion open die

Backward extrusion closed die

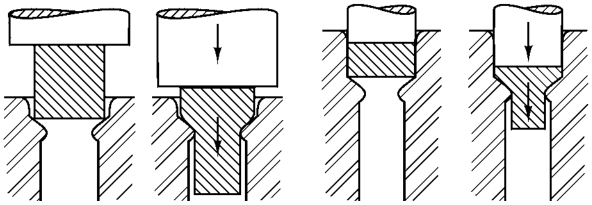

Forward extrusion open die

Forward extrusion closed die

FIGURE 16-43 Backward and forward extrusion with open and closed dies.

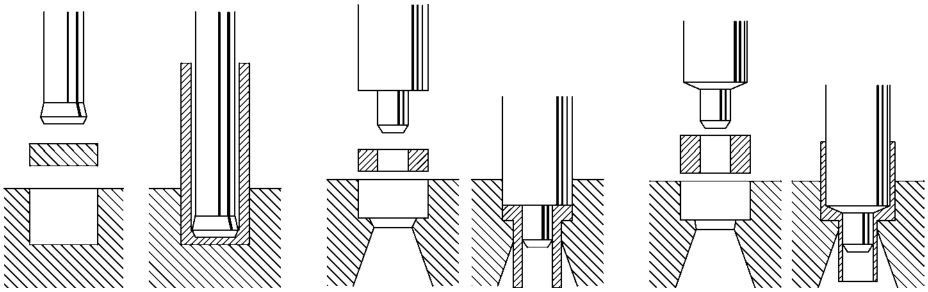

(a) (b) (c)

FIGURE 16-44 (a) Reverse, (b) forward, and (c) combined forms of cold extrusion. *(Courtesy the Aluminum Association, Arlington, VA.)*

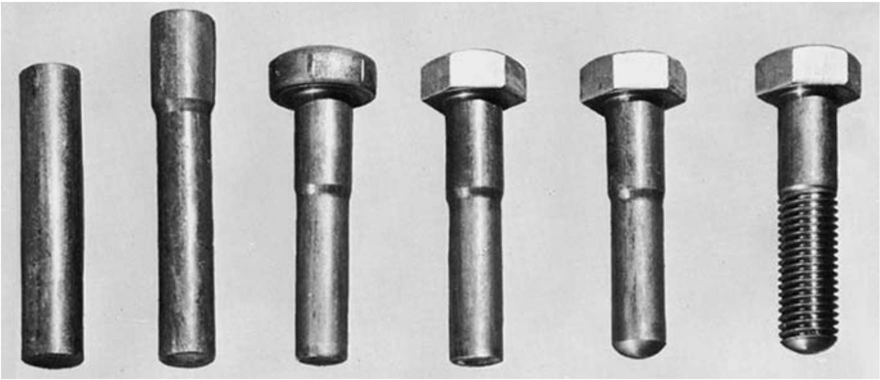

FIGURE 16-45 Steps in the forming of a bolt by cold extrusion, cold heading, and thread rolling. *(Courtesy of National Machinery Co., Tiffin, OH.)*

The impact extrusion processes were first used to shape low-strength metals such as lead, tin, zinc, and aluminum into products such as collapsible tubes for toothpaste, medications, and other creams; small "cans" for shielding electronic components; zinc cases for flashlight batteries; and larger cans for food and beverages. In recent years, impact extrusion has expanded to the forming of mild steel parts, where it is often used in combination with cold heading, as in the example of Figure 16-45. When heading alone is used, there is a definite limit to the ratio of the head and stock diameters (as presented in Figure 16-17 and related discussion). The combination of forward extrusion and cold heading overcomes this limitation by using an intermediate starting diameter. The shank portion is reduced by forward extrusion while upsetting is used to increase the diameter of the head.

By using various types of dies and combining high-speed operations such as heading, upsetting, extrusion, piercing, bending, coining, thread rolling, and knurling, a wide

FIGURE 16-46 Cold-forming sequence involving cutoff, squaring, two extrusions, an upset, and a trimming operation. Also shown are the finished part and the trimmed scrap. *(Courtesy of National Machinery Co., Tiffin, OH.)*

variety of relatively complex parts can be cold formed to close tolerances. Figure 16-46 illustrates an operation that incorporates two extrusions, a central upset, and a final operation to shape and trim that upset. Figure 16-47 presents an array of upset and extruded products. The larger parts are generally hot formed and machined, while the smaller ones are cold formed.

Since cold forming is a chipless manufacturing process, producing parts by deformation that would otherwise be machined from bar stock or hot forgings, the material

FIGURE 16-47 Typical parts made by upsetting and related operations. *(Courtesy of National Machinery Co., Tiffin, OH.)*

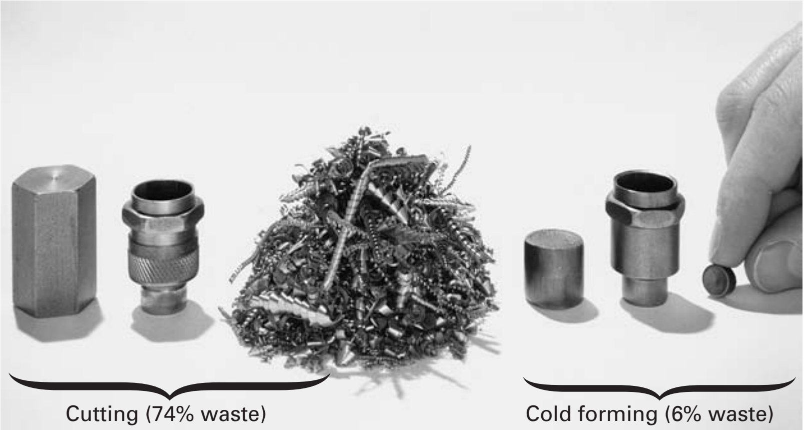

FIGURE 16-48 Manufacture of a spark plug body: (left) by machining from hexagonal bar stock; (right) by cold forming. Note the reduction in waste. *(Courtesy of National Machinery Co., Tiffin, OH.)*

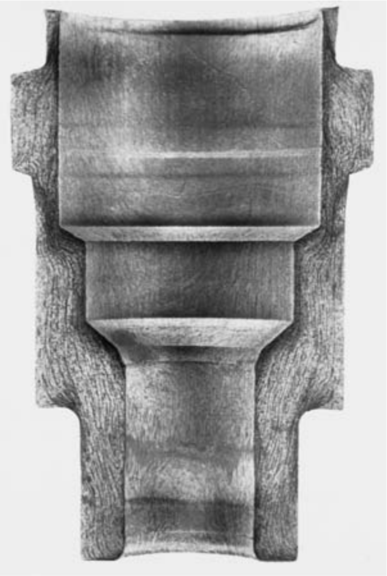

FIGURE 16-49 Section of the cold-formed spark plug body of Figure 16-48, etched to reveal the flow lines. The cold-formed structure produces an 18% increase in strength over the machined product. *(Courtesy of National Machinery Co., Tiffin, OH.)*

is used more efficiently and waste is reduced. Figure 16-48 compares the manufacture of a spark plug body by machining from hexagonal bar stock with manufacture by cold forming. Material is saved, machining time and cost are reduced, and the product is stronger, due to cold work, and tougher, as illustrated by the flow lines revealed in Figure 16-49. By converting from screw machining to cold forming, a manufacturer of cruise-control housings was able to reduce material usage by 65%, while simultaneously increasing production rate by a factor of 5.

While cold forming is generally associated with the manufacture of small, symmetrical parts from the weaker nonferrous metals, the process is now used extensively on steel and stainless steel, with parts up to 45 kg (100 lb) in weight and 18 cm (7 in.) in diameter. At the small end of the scale, microformers are now cold forming extremely small electronic components with dimensional accuracies within 0.005 mm (0.0002 in.).

Cold-formed shapes are usually axisymmetric or those with relatively small departures from symmetry. Production rates are high; dimensional tolerances and surface finish are excellent; and there are no draft angles, parting lines, or flash to trim off. There is almost no material waste, and a considerable amount of machining can often be eliminated when used in place of alternate processes. Strain hardening can provide additional strength (up to 70% stronger than machined parts), and favorable grain flow can enhance toughness and fatigue life. As a result, parts can often be made smaller or thinner, or from lower-cost materials. Unfortunately, the cost of the required tooling, coupled with the high production speed, generally requires large-volume production, typically in excess of 50,000 parts per year.

■ 16.9 PIERCING

Thick-walled *seamless tubing* can be made by *rotary piercing*, a process illustrated in Figure 16-50. A heated billet is fed longitudinally into the gap between two large, convex-tapered rolls. These rolls are rotated in the same direction, but the axes of the rolls are offset from the axis of the billet by about 6°, one to the right and the other to the left. The clearance between the rolls is preset at a value less than the diameter of the incoming billet. As the billet is caught by the rolls, it is simultaneously rotated and driven forward. The reduced clearance between the rolls forces the billet to deform into a rotating ellipse. As shown in the right-hand segment of Figure 16-50, rotation of the elliptical section causes the metal to shear about the major axis. A crack tends to form down the center axis of the billet, and the cracked material is then forced over a pointed mandrel that enlarges and shapes the opening to create a seamless tube. The result is a short length of thick-walled seamless tubing, which can then be passed through sizing rolls to reduce the diameter and/or wall thickness. Seamless tubes can also be expanded in diameter by passing them over an enlarging mandrel. As the diameter and circumference increase, the walls correspondingly thin.

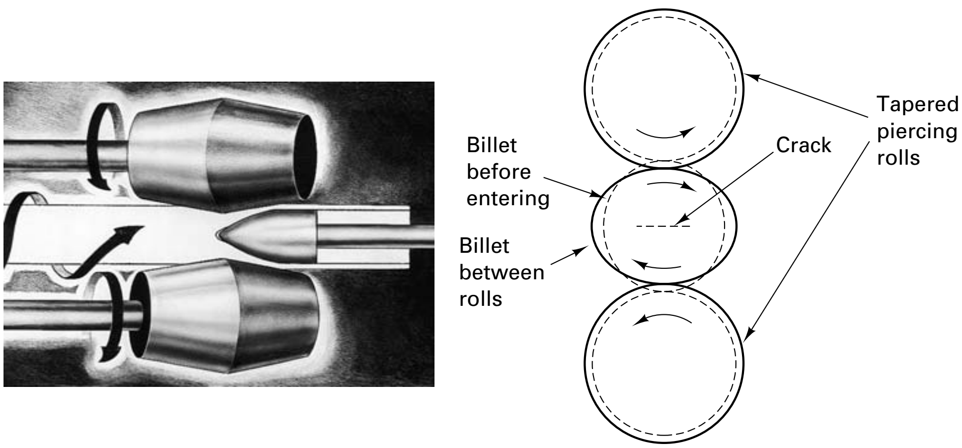

FIGURE 16-50 (Left) Principle of the Mannesmann process of producing seamless tubing. *(Courtesy of American Brass Company, Cleveland, OH.)* (Right) Mechanism of crack formation in the Mannesmann process.

The *Mannesmann mills* commonly used in hot piercing can be used to produce tubing up to 300 mm (12 in.) in diameter. Larger-diameter tubes can be produced on *Stiefel mills*, which use the same principle but replace the convex rolls of the Mannesmann mill with larger-diameter conical disks.

16.10 OTHER SQUEEZING PROCESSES

ROLL EXTRUSION

Thin-walled cylinders can be produced from thicker-wall material by the *roll-extrusion* process. In the variant depicted in Figure 16-51a, internal rollers expand the internal diameter as they squeeze the rotating material against an external confining ring. The tube elongates as the wall thickness is reduced. In Figure 16-51b, the internal diameter is maintained as external rollers squeeze the material against a rotating mandrel. Although the process has been used to produce cylinders from 2 cm to 4 m (0.75 to 156 in.) in diameter, most products have diameters between 7.5 and 50 cm (3 and 20 in.).

SIZING

Sizing involves squeezing all or selected regions of forgings, ductile castings, or powder metallurgy products to achieve a prescribed thickness or enhanced dimensional precision. By incorporating sizing, designers can make the initial tolerances of a part more liberal, enabling the use of less costly production methods. Those dimensions that must be precise are then set by one or more sizing operations that are usually performed on simple, mechanically driven presses.

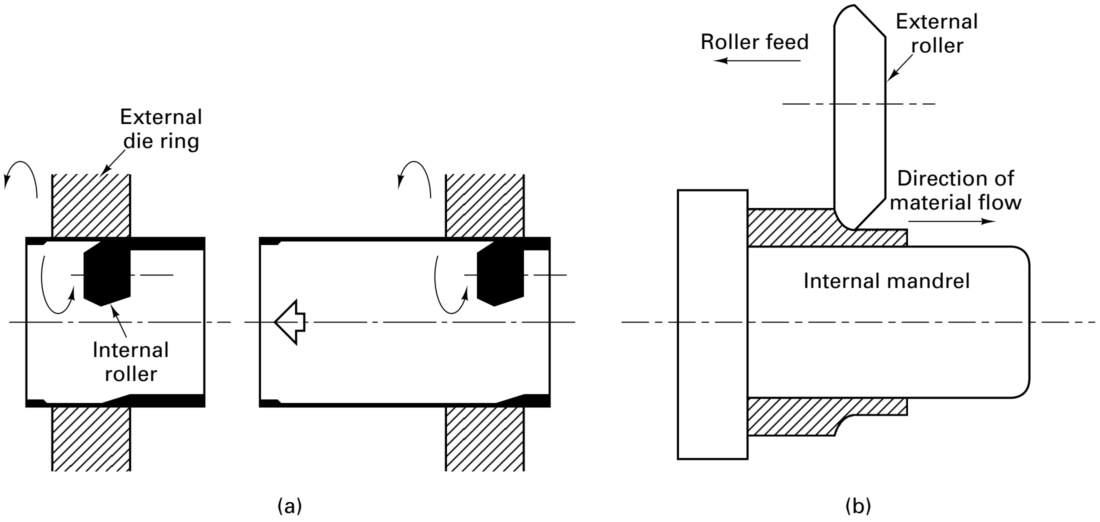

FIGURE 16-51 The roll-extrusion process: (a) with internal rollers expanding the inner diameter; (b) with external rollers reducing the outer diameter.

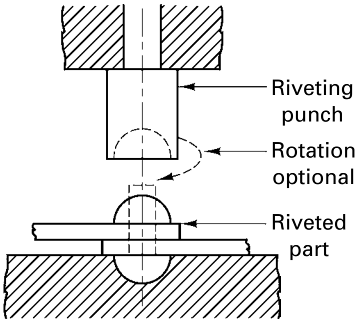

FIGURE 16-52 Joining components by riveting.

RIVETING

In *riveting*, an expanded head is formed on the shank end of a fastener to permanently join sheets or plates of material. Although riveting is usually done hot in structural applications, it is almost always done cold in manufacturing. Where there is access to both sides of the work, the method illustrated in Figure 16-52 is commonly used. The shaped punch may be driven by a press or contained in a special, hand-held riveting hammer. When a press is used, the rivet is usually headed in a single squeezing action, although the heading punch may also rotate so as to shape the head in a progressive manner, an approach known as *orbital forming*. Special riveting machines, like those used in aircraft assembly, can punch the hole, place the rivet in position, and perform the heading operation—all in about 1 second.

It is often desirable to use riveting in situations where there is access to only one side of the assembly. Figure 16-53 shows two types of special rivets that can be used for one-side-access applications. The shank on the "blind" side of an *explosive rivet* expands upon detonation to form a retaining head when a heated tool is touched against the exposed segment. In the pull type, or *pop-rivet*, a pull-up pin is used to expand a tubular shank. After performing its function, the pull pin breaks or is cut off flush with the head.

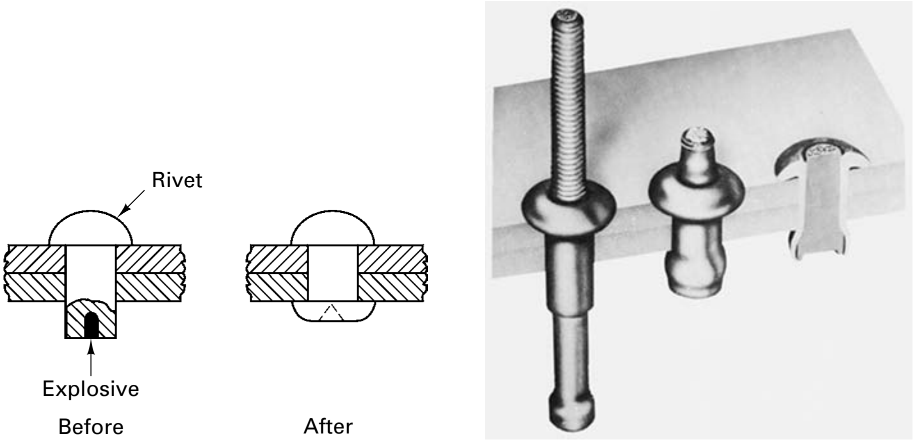

FIGURE 16-53 Rivets for use in "blind" riveting: (left) explosive type; (right) shank-type pull-up. *(Courtesy of Alcoa Fastening Systems, Pittsburgh, PA.)*

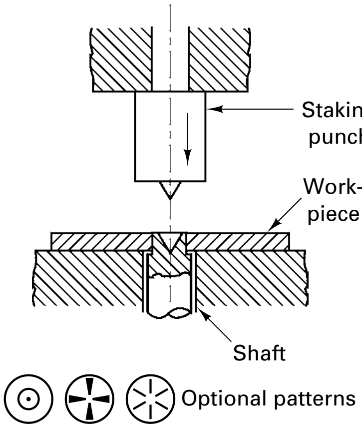

FIGURE 16-54 Permanently attaching a shaft to a plate by staking.

STAKING

Staking is a method of permanently joining parts together when a segment of one part protrudes through a hole in the other. As shown in Figure 16-54, a shaped punch is driven into the exposed end of the protruding piece. The deformation causes radial expansion, mechanically locking the two pieces together. Because the tooling is simple and the operation can be completed with a single stroke of a press, staking is a convenient and economical method of fastening when permanence is desired and the appearance of the punch mark is not objectionable. Figure 16-54 includes some of the decorative punch designs that are commonly used.

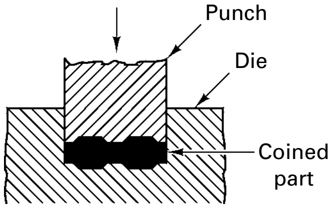

FIGURE 16-55 The coining process.

COINING

The term *coining* refers to the cold squeezing of metal while all of the surfaces are confined within a set of dies. The process, illustrated schematically in Figure 16-55, is used to produce coins, medals, and other products where exact size and fine detail are required and where thickness varies about a well-defined average. Because of the total confinement (there is no possibility for excess metal to escape from the die), the input material must be accurately sized to avoid breakage of the dies or press. Coining pressures may be as high as 1400 MPa or 200,000 psi.

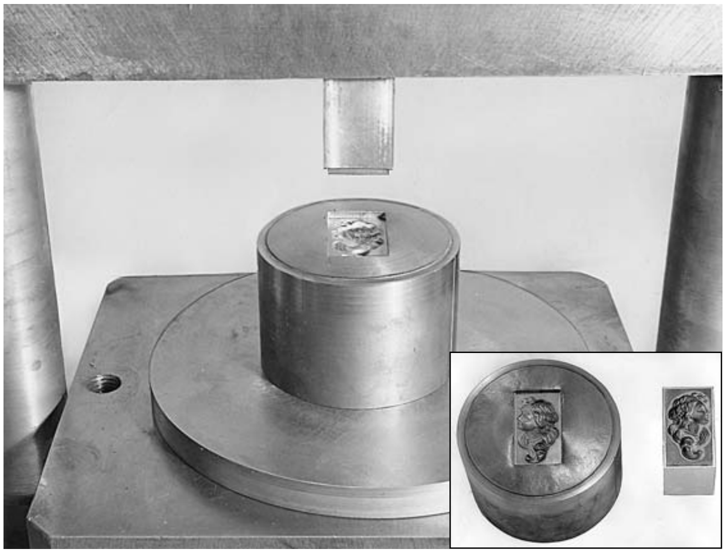

FIGURE 16-56 Hubbing a die block in a hydraulic press. Inset shows close-up of the hardened hub and the impression in the die block. The die block is contained in a reinforcing ring. The upper surface of the die block is then machined flat to remove the bulged metal.

HUBBING

Hubbing[1] is a cold-working process that is used to plastically form recessed cavities in a workpiece. As shown in Figure 16-56, a male hub (or master) is made with the reverse profile of the desired cavity. After hardening, the hub is pressed into an annealed block (usually by a hydraulic press) until the desired impression is produced. (*Note*: Production of the cavity can often be aided by machining away some of the metal in regions where large amounts of material would be displaced.) The hub is withdrawn, and the displaced metal is removed by a facing-type machining cut. The workpiece, which now contains the desired cavity, is then hardened by heat treatment.

Hubbing is often more economical than die sinking (machining the cavity), especially when multiple impressions are to be produced. One hub can be used to form a number of identical cavities, and it is generally easier to machine a male profile (with exposed surfaces) than a female cavity (where you are cutting in a hole).

■ 16.11 SURFACE IMPROVEMENT BY DEFORMATION PROCESSING

Deformation processes can also be used to improve or alter the surfaces of metal products. *Peening* is the mechanical working of surfaces by repeated blows of impelled shot or a round-nose tool. The highly localized impacts flatten and broaden the metal surface, but the underlying material restricts spread, resulting in a surface with residual compression. Since the net loading on a material surface is the applied load minus the residual compression, peening tends to enhance the fracture resistance and fatigue life of tensile-loaded components. For this reason, shot impellers are frequently used to peen shafting, crankshafts, connecting rods, gear teeth, and other cyclic-loaded components.

Manual or pneumatic hammers are frequently used to peen the surfaces of metal weldments. Solidification shrinkage and thermal contraction produce surfaces with residual tension. Peening can reduce or cancel this effect, thereby reducing associated distortion and preventing cracking.

Burnishing involves rubbing a smooth, hard object (under considerable pressure) over the minute surface irregularities that are produced during machining or shearing. The edges of sheet metal stampings can be burnished by pushing the stamped parts through a slightly tapered die having its entrance end a little larger than the workpiece and its exit slightly smaller. As the part rubs along the sides of the die, the pressure is sufficient to smooth the slightly rough edges that are characteristic of a blanking operation (see Figure 18-2).

---

[1] This process should not be confused with "hobbing," a machining process used for cutting gears.

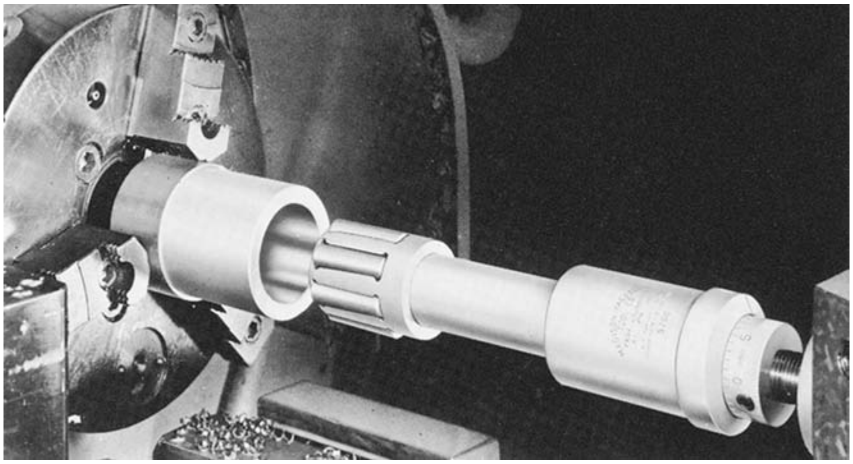

FIGURE 16-57 Tool for roller burnishing. The burnishing rollers move outward by means of a taper. *(Courtesy of Madison Industries, Inc., Sumter, SC.)*

Roller burnishing, illustrated in Figure 16-57, can be used to improve the size and finish of internal and external cylindrical and conical surfaces. The hardened rolls of a burnishing tool press against the surface and deform the protrusions to a more-nearly-flat geometry. The resulting surfaces possess improved wear and fatigue resistance, since they have been cold worked, and are now in residual compression.

Key Words

automatic hot forging
bar
billet
blocking
bloom
bulk deformation processes
closed-die forging
cluster mill
coining
cold forming
cold heading
Conform process
continuous extrusion
controlled rolling
counterblow machine
crowned roll
direct extrusion
draw bench
drawing
drop-hammer forging
extrusion
finisher impression
finishing temperature
flash
flashless forging
floating plug
forging
hammer
hubbing
hydraulic press
hydrostatic extrusion
impactor
impression-die forging
indirect extrusion
isothermal forging
mandrel
Mannesmann mill
mechanical press
mill scale
near-net-shape forging
net-shape forging
open-die forging
pack rolling
piercing
pipe
plate
press forging
pressure-induced ductility
pressure-to-pressure extrusion
ring rolling
riveting
rod
roll extrusion
roll forging
rolling
rotary piercing
seamless tubing
sheet
sheet forming
sizing
slab
spider-mandrel die
staking
Stiefel mill
strip
structural shape
swaging
thermomechanical processing
thread rolling
tube
tube drawing
tube sinking
upset
upset forging
wire drawing

Review Questions

1. Briefly describe the evolution of forming equipment from ancient to modern.
2. What are some of the possible means of classifying metal deformation processes?
3. Why might the method of analysis be different for a process like forging and a process like rolling?
4. What are some of the common terms applied to the various shapes of rolled products?
5. Why are hot-rolled products generally limited to standard shapes and sizes?
6. Why is it undesirable to minimize friction between the workpiece and tooling in a rolling operation?
7. Why is it desirable to have uniform temperature when hot rolling a material?
8. Why is it important to control the finishing temperature of a hot-rolling operation?
9. What are some of the attractive attributes of cold rolling?
10. Discuss the relative advantages and typical uses of two-high rolling mills with large-diameter rolls, three-high mills, and four-high mills.
11. Why is foil almost always rolled on a cluster mill?
12. Why is speed synchronization of the various rolls so vitally important in a continuous or multistand rolling mill?
13. What types of products are produced by ring rolling?

14. Explain how hot-rolled products can have directional properties and residual stresses.
15. Discuss the problems in maintaining uniform thickness in a rolled product and some of the associated defects.
16. Why is a “crowned” roll always designed for a specific operation on a specific material?
17. What are some of the methods of improving the thickness uniformity of rolled products?
18. What is thermomechanical processing, and what are some of its possible advantages?
19. What are some of the types of flow that can occur in forging operations?
20. Why are steam or air hammers more attractive than gravity drop hammers for hammer forging?
21. What are some of the attractive features of computer-controlled forging hammers?
22. What is the difference between open-die and impression-die forging?
23. Why is open-die forging not a practical technique for large-scale production of identical products?
24. What additional controls must be exercised to perform flashless forging?
25. What is a blocker impression in a forging sequence?
26. What attractive features are offered by counterblow forging equipment, or impactors?
27. For what types of forging products or conditions might a press be preferred over a hammer?
28. Why are heated dies generally employed in hot-press forging operations?
29. Describe some of the primary differences among hammers, mechanical presses, and hydraulic presses.
30. Why are different tolerances usually applied to dimensions contained within a single die cavity and dimensions across the parting plane?
31. What are some of the roles played by lubricants in forging operations?
32. What is upset forging?
33. What are some of the typical products produced by upset-forging operations?
34. What are some of the attractive features of automatic hot forging? What is a major limitation?
35. How does roll forging differ from a conventional rolling operation?
36. What is *swaging*? What kind of products are produced?
37. How can the swaging process impart different sizes and shapes to an interior cavity and the exterior of a product?
38. What are some possible objectives of near-net-shape forging?
39. What metals can be shaped by extrusion?
40. What are some of the attractive features of the extrusion process?
41. What is the primary shape limitation of the extrusion process?
42. What is the primary benefit of indirect extrusion?
43. What property of a lubricant is critical in extrusion that might not be required for processes such as forging?
44. What types of products are made using a spider-mandrel die? Why can lubricants not be used in spider-mandrel extrusion?
45. What are some of the unique capabilities and special limitations of hydrostatic extrusion?
46. What is the unique capability provided by pressure-to-pressure hydrostatic extrusion?
47. How is the feedstock pushed through the die in continuous extrusion processes?
48. Why are rods generally drawn on draw benches, while wire is drawn on draw block machines?
49. What is the difference between tube drawing and tube sinking?
50. For what types of products might a floating plug be employed?
51. Why are multiple passes usually required in wire-drawing operations?
52. What types of products are produced by cold heading?
53. What is impact extrusion and what variations exist?
54. If a product contains a large-diameter head and a small-diameter shank, how can the processes of cold extrusion and cold heading be combined to save metal?
55. What are some of the attractive properties or characteristics of cold-forming operations?
56. How might cold forging be used to substantially reduce material waste?
57. What processes can be used to produce seamless pipe or tubing?
58. What type of products can be made by the roll-extrusion process?
59. What types of rivets can be used when there is access to only one side of a joint?
60. Why might hubbing be an attractive way to produce a number of identical die cavities?
61. How might a peening operation increase the fracture resistance of a product?
62. What is burnishing?

■ Problems

1. Some snack foods, such as rectangular corn chips, are often formed by a rolling-type operation and are subject to the same types of defects common to rolled sheet and strip. Obtain a bag of such a snack and examine the chips to identify examples of rolling-related defects such as those discussed in Section 16.4 and shown in Figure 16-A.

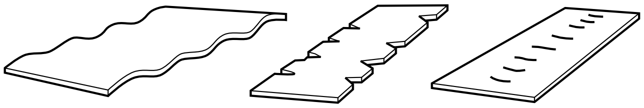

FIGURE 16-A Some typical defects that occur during rolling: wavy edges, edge cracking, and center cracking.

2. Consider the extrusion of a cylindrical billet, and compute the following.
   a. Assume the starting billet to have a length of 0.3 m and a diameter of 15 cm. This is extruded into a cylindrical product that is 3 cm in diameter and 7.5 m long (a reduction ratio of 25). Neglecting the areas on the two ends, compute the ratio between the product surface area (wrap around cylinder) and the surface area of the starting billet.
   b. How would this ratio change if the product were a square with the same cross-sectional area as that of the 3-cm-diameter circle?
   c. Consider a cylinder-to-cylinder extrusion with a reduction ratio of R. Derive a general expression of the relative sur-

face areas of product to billet as a function of R. (*Hint:* Start with a cylinder with length and diameter both equal to 1 unit. Since the final area will be $1/R$ times the original, the final length will be R units and the final diameter will be proportional to $1/\sqrt{R}$).

d. If the final product had a more complex cross-sectional shape than a cylinder, would the final area be greater than or less than that computed in part c?

e. Relate your answers above to a consideration of lubrication during large-reduction extrusion operations.

3. The force required to compress a cylindrical solid between flat parallel dies (see Figure 16-10) has been estimated (by a theory of plasticity analysis) to be:

$$\text{force} = \pi R^2 \sigma_o \frac{1 + 2\,mR}{3\sqrt{3}\,T}$$

where:

R = radius of the cylinder
T = thickness of the cylinder
σ_o = yield strength of the material
m = friction factor (between 0 and 1 where 0 is frictionless and 1 is complete sticking)

An engineering student is attempting to impress his date by demonstrating some of the neat aspects of metalforming. He places a shiny penny between the platens of a 60,000-lb-capacity press and proceeds to apply pressure. Assume that the coin has a $\frac{3}{4}$-in. diameter and is $\frac{1}{16}$ in. thick. The yield strength is estimated as 50,000 psi, and since no lubricant is applied, friction is that of complete sticking, or $m = 1.0$.

a. Compute the force required to induce plastic deformation.

b. If this force is greater than the capacity of the press (60,000 lb), compute the pressure when the full-capacity force of 60,000 lb is applied.

c. If the press surfaces are made from thick plates of steel with a yield strength of 120,000 psi, describe the results of the demonstration.

d. A simple model of forging force uses the equation:

$$\text{force} = K \sigma_o A$$

where:

K = a dimensionless multiplying factor
σ_o = yield strength of the material
A = projected area of the forging

K is assigned a value of 3–5 for simple shapes without flash, 5–8 for simple shapes with flash, and 8–12 for complex shapes with flash. Consider the two equations for forging force and discuss their similarities and differences.

4. Mathematical analysis of the rolling of flat strip reveals that the roll-separation force (the squeezing force required to deform the strip) is directly proportional to the term:

$$1 + \frac{K_1 mL}{t_{av}}$$

where:

K_1 = geometric constant
m = friction factor
L = length of contact
t_{av} = average thickness of the strip in the roll bite

Since L is proportional to the roll radius, R, K_1L can be replaced by K_2R, so the force becomes proportional to the term:

$$1 + \frac{K_2 mR}{t_{av}}$$

If K_2 and m are both positive numbers, how will the roll-separation force change as the strip becomes thinner? How can this effect be minimized? Relate your observations to the types of rolling mills used for various thicknesses of product.

5. In Figure 16-28, the vertical axis is force and the horizontal axis is position. If force is measured in pounds and position in feet, the area under the curves has units of foot-pounds and is a measure of the work performed. If the area under the indirect extrusion curve is proportional to the work required to extrude a product without billet–chamber frictional resistance, how could the relative regions of the direct extrusion curve be used to determine a crude measure of the mechanical "efficiency" of direct extrusion?

6. Compare the forming processes of wire drawing, conventional extrusion, and continuous extrusion with respect to continuity, reduction in area possible in a single operation, possible materials, speeds, typical temperatures, and other important processing variables.

7. Figure 16-B shows the rolling of a wide, thin strip where the width remains constant as thickness is reduced. Material enters the mill at a rate equal to $t_o w_o v_o$ and exits at a rate of $t_f w_o v_f$. Since material cannot be created or destroyed, these rates must be equal, and the w_o terms will cancel. As a result, v_f is equal to $(t_o/t_f)\,v_o$. The material enters at velocity v_o and accelerates to velocity v_f as the material passes through the mill. For stable rolling, the velocity of the roll surface, v_r, which is a constant, must be a value between v_o and v_f. For these conditions, describe the relative sliding between the strip and the rolls as the strip moves through the region of contact.

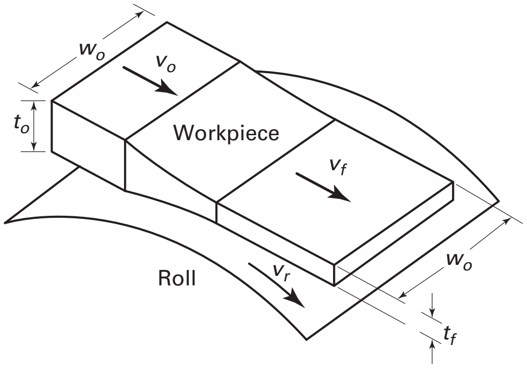

FIGURE 16-B Strip rolling where the width of the strip remains unchanged. The lines across the workpiece block the area of contact with the rolls. The top roll has been removed for ease of visualization.

Chapter 16 CASE STUDY

Handle and Body of a Large Ratchet Wrench

Figure 15-A has already presented the handle and body segment of a relatively large ratchet wrench, such as those used with conventional socket sets. The design specifications require a material with a minimum yield strength of 50,000 psi and an elongation of at least 2% in all directions. Additional consideration should be given to weight minimization (because of the relatively large size of the wrench), corrosion resistance (due to storage and use environments), machinability (if finish machining is required), and appearance.

1. Based on the size and shape of the product, describe several methods that could be used to produce the component. For each method, briefly discuss the relative pros and cons.
2. What types of engineering materials might be able to meet the requirements? What would be the pros and cons of each general family?
3. For each of the shape generation methods in question 1, select an appropriate material from the alternatives discussed in question 2, making sure that the process and material are compatible.
4. Which of the combinations do you feel would be the “best” solution to the problem? Why?
5. For this system, outline the specific steps that would be required to produce the part from reasonable starting material.
6. For your proposed solution, would any additional heat treatment or surface treatment be required? If so, what would you recommend?
7. If a variation of this tool were to be marketed as a “safety tool” that could be used in areas of gas leaks where a spark might be fatal, how would you modify your previous recommendations? Discuss briefly.

CHAPTER 17

SHEET-FORMING PROCESSES

17.1 INTRODUCTION

The various classification schemes for metal deformation processes have been presented at the beginning of Chapter 16, with the indication that our text will be grouping by bulk (Chapter 16) and sheet (Chapter 17). Bulk forming uses heavy machinery to apply three-dimensional stresses, and most of the processes are considered to be primary operations. Sheet metal processes, on the other hand, generally involve plane stress loadings and lower forces than bulk forming. Almost all sheet metal forming is considered to be secondary processing.

The classification into bulk and sheet is far from distinct, however. Some processes can be considered as either, depending on the size, shape, or thickness of the workpiece. The bending of rod or bar is often considered to be bulk forming, while the bending of sheet metal is sheet forming. Tube bending can be either, depending on the wall thickness and diameter of the tube. Similar areas of confusion can be found in deep drawing, roll forming, and other processes. The squeezing processes were described in Chapter 16. Presented here will be the processes that involve *shearing, bending*, and *drawing*. Table 17-1 lists some of the processes that fit these categories.

17.2 SHEARING OPERATIONS

Shearing is the mechanical cutting of materials without the formation of chips or the use of burning or melting. It is often used to prepare material for subsequent operations, and its success helps to ensure the accuracy and precision of the finished product. When the two cutting blades are straight, the process is called *shearing*. When the blades are curved, the processes have special names, such as *blanking, piercing, notching*, and *trimming*. In terms of tool design and material behavior, however, all are shearing-type operations.

TABLE 17-1 Classification of the Nonsqueezing Metalforming Operations

Shearing	Bending	Drawing and Stretching
1. Simple shearing	1. Angle bending	1. Spinning
2. Slitting	2. Roll bending	2. Shear forming or flow turning
3. Piercing	3. Draw bending	3. Stretch forming
4. Blanking	4. Compression bending	4. Deep drawing and shallow drawing
5. Fineblanking	5. Press bending	5. Rubber-tool forming
6. Lancing	6. Tube bending	6. Sheet hydroforming
7. Notching	7. Roll forming	7. Tube hydroforming
8. Nibbling	8. Seaming	8. Hot drawing
9. Shaving	9. Flanging	9. High-energy-rate forming
10. Trimming	10. Straightening	10. Ironing
11. Cutoff		11. Embossing
12. Dinking		12. Superplastic sheet forming

A simple type of shearing operation is illustrated in Figure 17-1. As the punch (or upper blade) pushes on the workpiece, the metal responds by flowing plastically into the die (or over the lower blade). Because the clearance between the two tools is small, usually between 5 and 10% of the thickness of the metal being cut, the deformation occurs as highly localized shear. As the punch pushes downward on the metal, the material flows into the die, with the opposite surface bulging slightly. An instability arises when the penetration is between 15 and 60% of the metal thickness, the actual amount depending on the strength and ductility of the material. The applied stress exceeds the shear strength of the remaining material, and the metal tears or ruptures through the rest of its thickness, creating an inwardly inclined fracture and a ragged edge or burr. As shown in Figure 17-2, the two distinct stages of the shearing process, deformation and fracture, are often visible on the edges of sheared parts.

Because of the normal inhomogeneities in a metal and the possibility of nonuniform clearance between the shear blades, the final shearing does not occur in a uniform manner. Fracture and tearing begin at the weakest point and proceed progressively or intermittently to the next-weakest location. This usually results in a rough and ragged edge, which combined with possible microcracks and work hardening of the sheared edge can adversely affect subsequent forming processes.

Changing the clearance between the punch and the die can greatly change the condition of the cut edge. If the punch and die (or upper and lower shearing blades) have proper alignment and clearance, and are maintained in good condition, sheared edges can be produced that have sufficient smoothness to permit use without further finishing. The quality of the sheared edge can often be improved by clamping the starting stock firmly against the die (from above) and restraining the movement of the sheared piece by a plunger or rubber die cushion that applies opposing pressure from below. Each of these measures causes the shearing to take place more uniformly around the perimeter of the cut.

If the entire shearing operation is performed in a compressive environment, fracture is suppressed and the relative fraction of smooth edge (produced by deformation) is increased. Above a certain pressure, no fracture occurs and the entire edge is smooth, deformed metal. Figure 17-3 shows one method of producing a compressive environment. In the *fineblanking* process, a V-shaped protrusion is incorporated into the hold-down or pressure plate at a location slightly external to the contour of the cut. As pressure is applied to the hold-down or pressure plate, the protrusion is driven into the material, compressing the region to be cut. Matching upper and lower punches then squeeze the material from above and below, and descend in unison, extracting the desired segment. With punch-die clearances of about $\frac{1}{10}$ those of conventional blanking, the sheared edges are now both smooth and square, as shown in Figure 17-4.

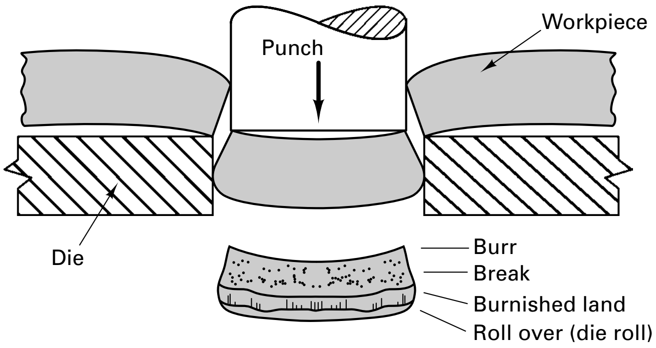

FIGURE 17-1 Simple blanking with a punch and die.

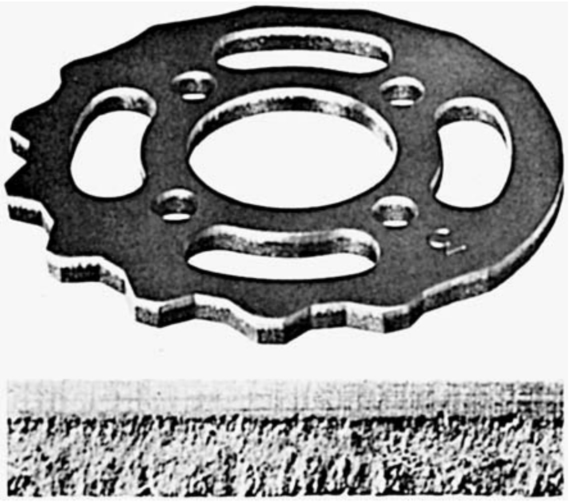

FIGURE 17-2 (Top) Conventionally sheared surface showing the distinct regions of deformation and fracture, and (bottom) magnified view of the sheared edge. *(Courtesy of Feintool Equipment Corp., Cincinnati, OH.)*

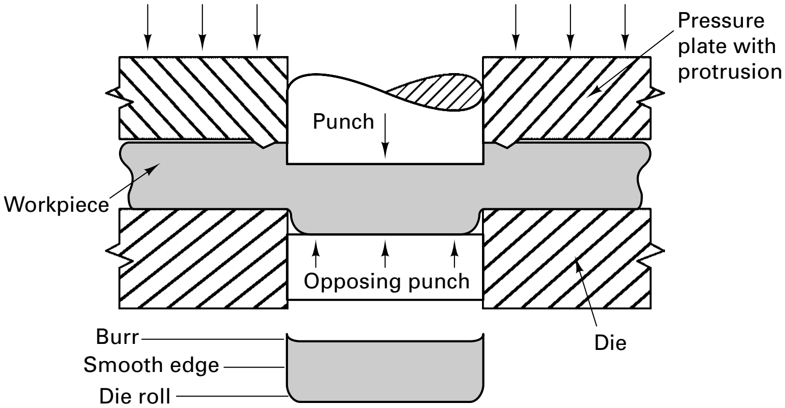

FIGURE 17-3 Method of obtaining a smooth edge in shearing by using a shaped pressure plate to put the metal into localized compression and a punch and opposing punch descending in unison.

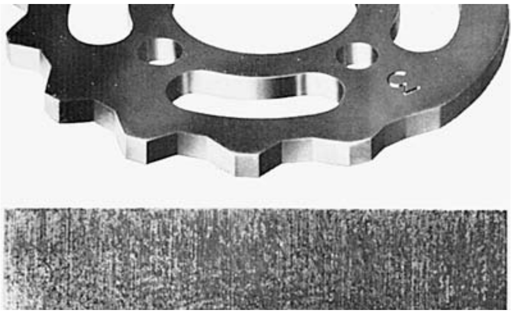

FIGURE 17-4 Fineblanked surface of the same component as shown in Figure 17-2. *(Courtesy of Feintool Equipment Corp., Cincinnati, OH.)*

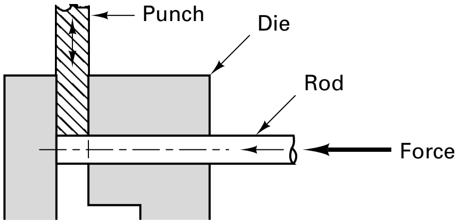

FIGURE 17-5 Method of smooth shearing a rod by putting it into compression during shearing.

Fineblanked parts are usually less than 6 mm ($\frac{1}{4}$ inch) in thickness and typically have complex-shaped perimeters. Dimensional accuracy is often within 0.05 mm (0.002 in.), and holes, slots, bends, and semipierced projections can be incorporated as part of the fineblanking operation. Secondary edge finishing can often be eliminated, and the work hardening that occurs during the shearing process enhances wear resistance. In fineblanking, however, a triple-action press is generally required. The fineblanking force is about 40% greater than conventional blanking of the same contour, and the extra material required for the impinging protrusion often forces a greater separation between nested parts.

Figure 17-5 illustrates another means of shearing under compression. Bar stock is pressed against the closed end of a feed hole, placing the stock in a state of compression. A transverse punch then shears the material into smooth-surface, burr-free slugs, ready for further processing.

SIMPLE SHEARING

When sheets of metal are to be sheared along a straight line, *squaring shears*, like the one shown in Figure 17-6, are frequently used. As the upper ram descends, a clamping bar or set of clamping fingers presses the sheet of metal against the machine table to hold it firmly in position. A moving blade then comes down across a fixed blade and shears the metal. On larger shears, the moving blade is often set at an angle or "rocks" as it descends, so the cut is made in a progressive fashion from one side of the material to the other, much like a pair of household scissors. This action significantly reduces the amount of cutting force required, replacing a high force–short stroke operation with one of lower force and longer stroke.

The upper blade may also be inclined about 0.5° to 2.5° with respect to the lower blade and descend along this line of inclination. While squareness and edge quality may be compromised, this action helps to ensure that the sheared material does not become wedged between the blades.

SLITTING

Slitting is the lengthwise shearing process used to cut coils of sheet metal into several rolls of narrower width. Here the shearing blades take the form of cylindrical rolls with circumferential mating grooves. The raised ribs of one roll match the recessed grooves on

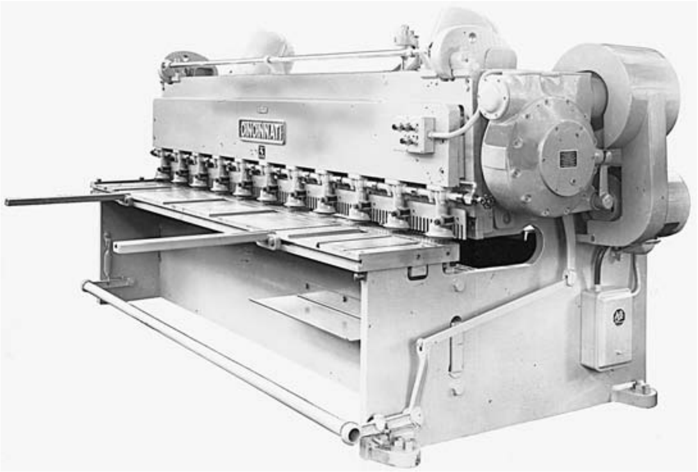

FIGURE 17-6 A 3-m (10-ft) power shear for 6.5 mm ($\frac{1}{4}$-in.) steel. *(Courtesy of Cincinnati Incorporated, Cincinnati, OH.)*

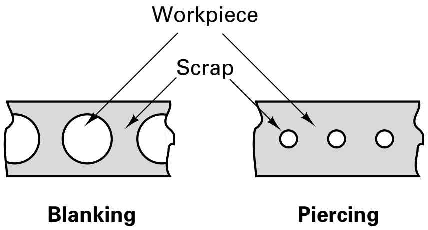

FIGURE 17-7 Schematic showing the difference between piercing and blanking.

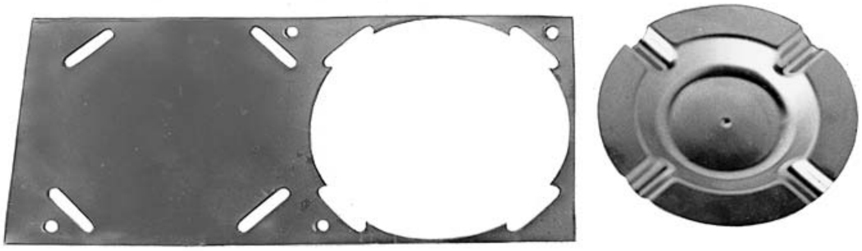

FIGURE 17-8 (Left to right) Piercing, lancing, and blanking precede the forming of the final ashtray. The small round holes assist positioning and alignment.

the other. The process is now continuous and can be performed rapidly and economically. Moreover, since the distance between adjacent shearing edges is fixed, the resultant strips have accurate and constant width, more consistent than that obtained from alternative cutting processes.

PIERCING AND BLANKING

Piercing and *blanking* are shearing operations where a part is removed from sheet material by forcing a shaped punch through the sheet and into a shaped die. Any two-dimensional shape can be produced, with one surface having a slightly rounded edge and the other surface containing a slight burr. Since both processes involve the same basic cutting action, the primary difference is one of definition. Figure 17-7 shows that in blanking, the piece being punched out becomes the workpiece. In piercing, the punchout is the scrap and the remaining strip is the workpiece. Piercing and blanking are usually done on some form of mechanical press.

Several variations of piercing and blanking are known by specific names. *Lancing* is a piercing operation that forms either a line cut (slit) or hole, like those shown in the left-hand portion of Figure 17-8. The primary purpose of lancing is to permit the adjacent metal to flow more readily in subsequent forming operations. In the case illustrated in Figure 17-8, the lancing makes it easier to shape the recessed grooves, which were formed before the ashtray was blanked from the strip stock and shallow drawn. *Perforating* consists of piercing a large number of closely spaced holes. *Notching* is used to remove segments from along the edge of an existing product.

In *nibbling*, a contour is progressively cut by producing a series of overlapping slits or notches, as shown in Figure 17-9. In this manner, simple tools can be used to cut a complex shape from sheets of metal up to 6 mm ($\frac{1}{4}$ in.) thick. The process is widely used when the quantities are insufficient to justify the expense of a dedicated blanking die. Edge smoothness is determined by the shape of the tooling and the degree of overlap in successive cuts.

FIGURE 17-9 Shearing operation being performed on a nibbling machine. *(Courtesy of Pacific Press Technologies, Mt. Carmel, IL.)*

Shaving is a finishing operation in which a small amount of metal is sheared away from the edge of an already blanked part. Its primary use is to obtain greater dimensional accuracy, but it may also be employed to produce a squared or smoother edge. Because only a small amount of metal is removed, the punches and dies must be made with very little clearance. Blanked parts, such as small gears, can be shaved to produce dimensional accuracies within 0.025 mm (0.001 in.).

In a *cutoff* operation, a punch and die are used to separate a stamping or other product from a strip of stock. The contour of the cutoff frequently completes the periphery of the workpiece. Cutoff operations are quite common in progressive die sequences, like several to be presented shortly.

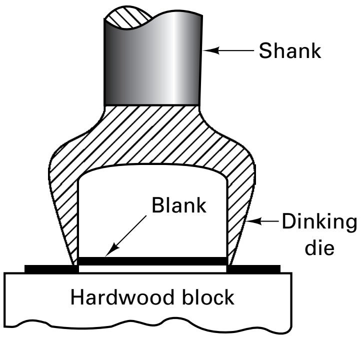

FIGURE 17-10 The dinking process.

Dinking is a modified shearing operation that is used to blank shapes from low-strength materials, such as rubber, fiber, or cloth. As illustrated in Figure 17-10, the shank of a die is either struck with a hammer or mallet or the entire die is driven downward by some form of mechanical press.

TOOLS AND DIES FOR PIERCING AND BLANKING

As shown in Figure 17-11, the basic components of a piercing and blanking die set are a *punch*, a *die*, and a *stripper plate*, which is attached above the die to keep the strip material from ascending with the retracting punch. The position of the stripper plate and the size of its hole should be such that it does not interfere with either the horizontal motion of the strip as it feeds into position or the vertical motion of the punch.

Theoretically, the punch should fit within the die with a uniform clearance that approaches zero. On its downward stroke, it should not enter the die but should stop just as its base aligns with the top surface of the die. In general practice, the clearance is from 5 to 7% of the stock thickness and the punch enters slightly into the die cavity.

If the face of the punch is normal to the axis of motion, the entire perimeter is cut simultaneously. By tilting the punch face on an angle, a feature known as *shear* or *rake angle*, the cutting force can be reduced substantially. As shown in Figure 17-12, the periphery is now cut in a progressive fashion, similar to the action of a pair of scissors or the opening of a “pop-top” beverage can. Variation in the shear angle controls the amount of cut that is made at any given time and the total stroke that is necessary to complete the operation. Adding shear reduces the force but increases the stroke. It is an attractive way to cut thicker or stronger material on an existing piece of equipment.

Punches and dies should also be in proper alignment so that a uniform clearance is maintained around the entire periphery. The die is usually attached to the bolster plate of the press, which, in turn, is attached to the main press frame. The punch is attached to the movable ram, enabling motion in and out of the die with each stroke of the press. Punches and dies can also be mounted on a separate *punch holder* and *die shoe*, like the one shown in Figure 17-13, to create an *independent die set*. The holder and shoe are permanently aligned and guided by two or more guide pins. By aligning a punch and die, and fastening them to the die set, an entire unit can be inserted into a press without having to set or check the tool alignment. This can significantly reduce the amount of production time lost during tool change. Moreover, when a given punch and die are no longer needed, they can be removed and new tools attached to the shoe and holder assembly.

In most cases the punch holder attaches directly to the ram of the press, and ram motion acts to both raise and lower the punch. On smaller die sets, springs can be incorporated to provide the upward motion. The ram simply pushes on the top of the punch holder, forcing it downward. When the ram retracts, the springs cause the punch to return to its starting position. This form of construction makes the die set fully self-contained. It is simply positioned in the press and can be easily removed, thereby reducing setup time.

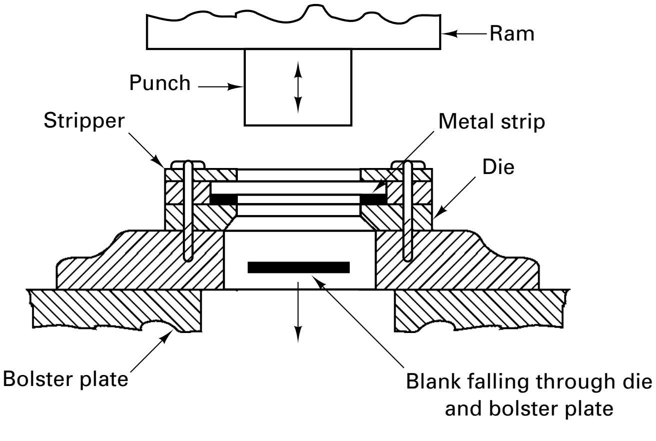

FIGURE 17-11 The basic components of piercing and blanking dies.

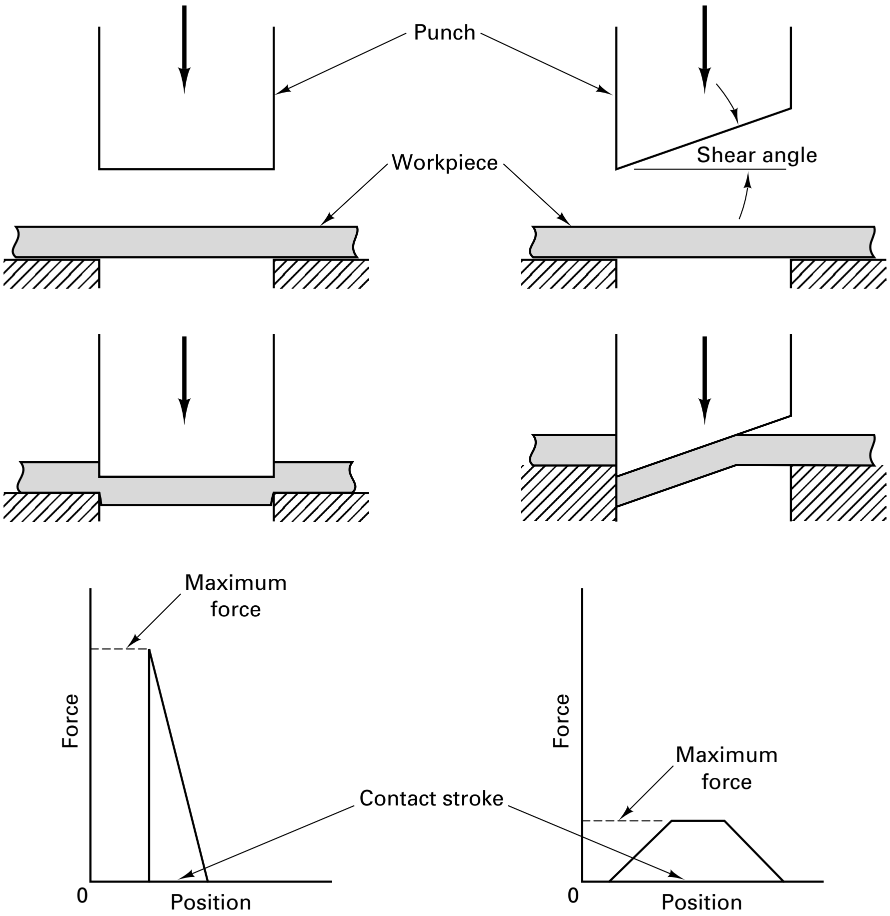

FIGURE 17-12 Blanking with a square-faced punch (left) and one containing angular shear (right). Note the difference in maximum force and contact stroke. The total work (the area under the curve) is the same for both processes.

A wide variety of standardized, self-contained die sets have been developed. Known as *subpress dies* or *modular tooling*, these can often be assembled and combined on the bed of a press to pierce or blank large parts that would otherwise require large and costly complex die sets. Figure 17-14 shows an assembly of subpress dies where a piece of sheet is inserted between the tooling and the downward motion of the press produces a variety of holes and slots, all in proper relation to one another.

FIGURE 17-13 Typical die set having two alignment guideposts. *(Courtesy of Danly IEM, Cleveland, OH.)*

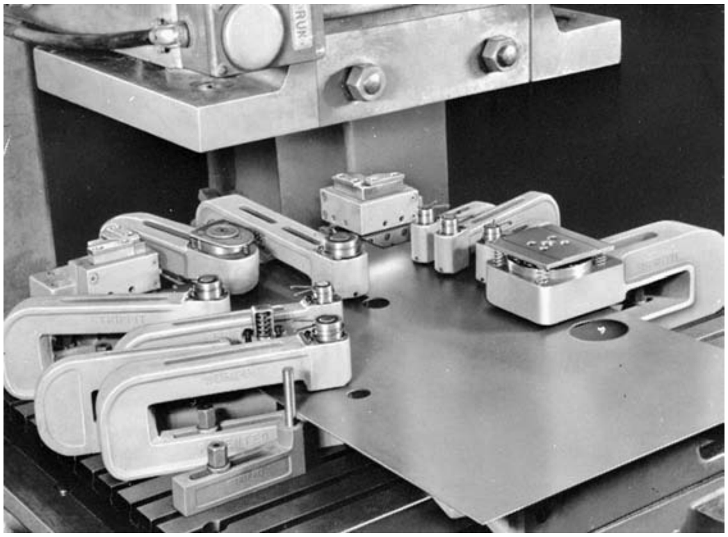

FIGURE 17-14 A piercing and blanking setup using self-contained subpress tool units. *(Courtesy of Strippit Division, Houdaille Industries, Inc., Akron, NY.)*

Punches and dies are usually made from low-distortion or air-hardenable tool steel so they can be hardened after machining with minimal warpage. The die profile is maintained for a depth of about 3 mm ($\frac{1}{8}$ inch) from the upper face, beyond which an angular clearance or back relief is generally provided (see Figure 17-11) to reduce friction between the part and the die and to permit the part to fall freely from the die after being sheared. The 3-mm depth provides adequate strength and sufficient metal so that the shearing edge can be resharpened by grinding a few thousandths of an inch from the face of the die.

Dies can be made as a single piece, or they can be made in component sections that are assembled on the punch holder and die shoe. The component approach simplifies production and enables the replacement of single sections in the event of wear or fracture. Complex dies like the one shown in Figure 17-15 can often be assembled from the many standardized punch and die components that are available. Substantial savings can often be achieved by modifying the design of parts to enable the use of standard die components. A further advantage of this approach is that when the die set is no longer needed, the components can be removed and used to construct tooling for another product.

When the cut periphery is composed of simple lines, and the material being cut is either soft metal or other soft material (such as plastics, wood, cork, felt, fabrics, and cardboard), "steel-rule" or "cookie-cutter" dies can often be used. The cutting die is fashioned from hardened steel strips, known as steel rule, that are mounted on edge in grooves that have been machined in the upper die block. The mating piece of tooling can be either a flat piece of hardwood or steel, a male shape that conforms to the part profile (such that the protruding strips descend around it), or a set of matching grooves into which the upper die can descend. Rubber pads are usually inserted between the strips to replace the stripper plate. During the compression stroke, the rubber compresses and allows the cutting action to proceed. As the ram ascends, the rubber then expands to push the blank free of the steel-rule cavity. Steel-rule dies are usually less expensive to construct than solid dies and are quite attractive for producing small quantities of parts.

Many parts require multiple cutting-type operations, and it is often desirable to produce a completed part with each cycle of a press. Several types of dies have been designed to accomplish this task. For simplicity, their operations are discussed in terms of manufacturing simple, flat washers from a continuous strip of metal.

The *progressive die* set, depicted in Figure 17-16, is the simpler of the two types. Basically, it consists of two or more sets of punches and dies mounted in tandem. Strip stock is fed into the first die, where a hole is pierced as the ram descends. When the ram raises, the stock advances and the pierced hole is positioned under the blanking punch.

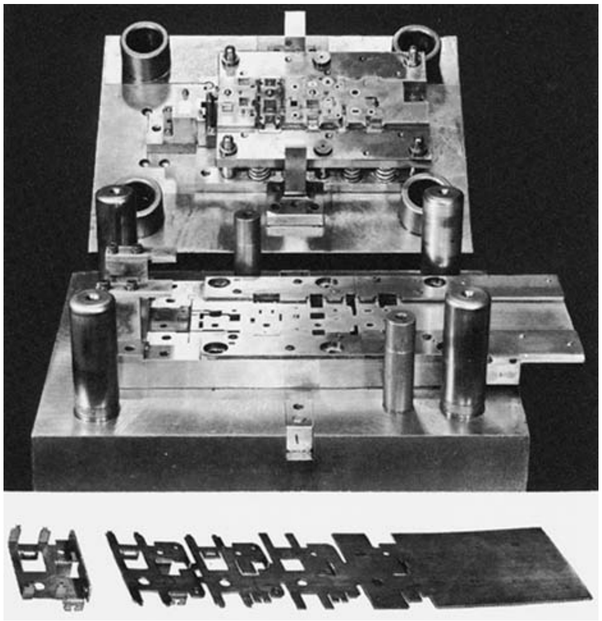

FIGURE 17-15 A progressive piercing, forming, and cutoff die set built up mostly from standard components. The part produced is shown at the bottom. *(Courtesy of Oak Manufacturing Company, Los Angeles, CA.)*

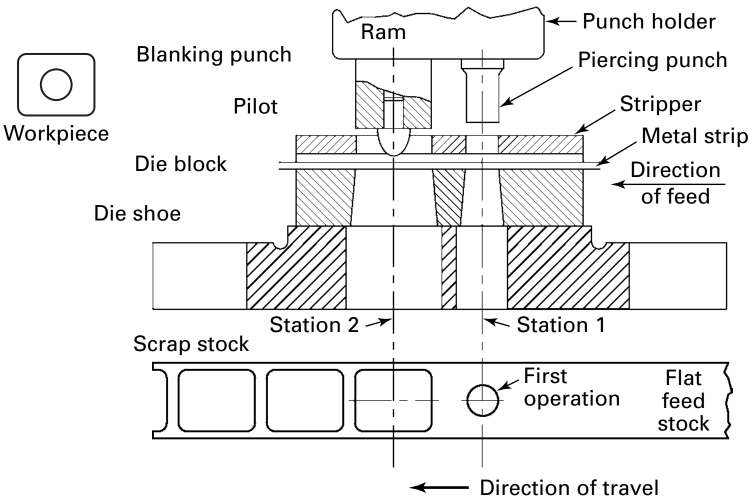

FIGURE 17-16 Progressive piercing and blanking die for making a square washer. Note that the punches are of different length.

Upon the second descent, a pilot on the bottom of the blanking punch enters the hole that was pierced on the previous stroke to ensure accurate alignment. Further descent of the punch blanks the completed washer from the strip and, at the same time, the first punch pierces the hole for the next washer. As the process continues, a finished part is completed with each stroke of the press.

Progressive dies can be used for many combinations of piercing, blanking, forming, lancing, and drawing, as shown by the examples in Figures 17-8, 17-15, and 17-17. They are relatively simple to construct and are economical to maintain and repair, since a defective punch or die does not require replacement of the entire die set. The material moves through the operations in the form of a continuous strip. As the products are shaped, they remain attached to the strip or carrier until a final cutoff operation. While the attachment may restrict some of the forming operations and prevents part reorientation between steps, it also enables the quick and accurate positioning of material in each of the die segments.

If individual parts are mechanically moved from operation to operation within a single press, the dies are known as *transfer dies*. Part handling must operate in harmony with the press motions to move, orient, and position the pieces as they travel through the die.

In *compound dies*, like the one shown schematically in Figure 17-18, piercing and blanking, or other combinations of operations, occur sequentially during a single stroke of the ram. Dies of this type are usually more expensive to construct and are more susceptible to breakage, but they generally offer more precise alignment of the sequential operations.

If many holes of varying sizes and shapes are to be placed in sheet components, numerically controlled *turret-type punch presses* may be specified. In these machines, as many as 60 separate punches and dies are contained within a turret that can quickly be rotated to provide the specific tooling required for an operation. Between operations, the workpiece is repositioned through numerically controlled movements of the worktable. This type of machine is particularly attractive when a variety of materials and thicknesses (0.4 to 8.0 mm) are being processed. Still greater flexibility can be achieved by single machines that combine punch pressing with laser cutting or water-jet cutting.

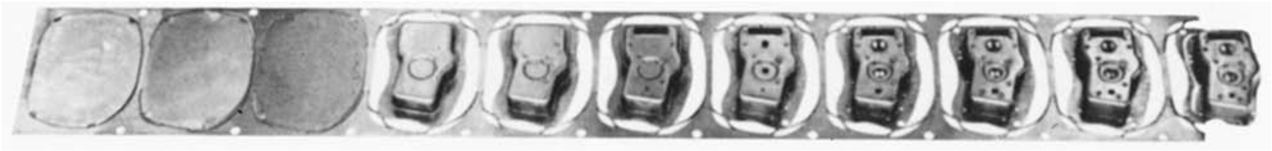

FIGURE 17-17 The various stages of an 11-station progressive die. *(Courtesy of the Minster Machine Company, Minster, OH.)*

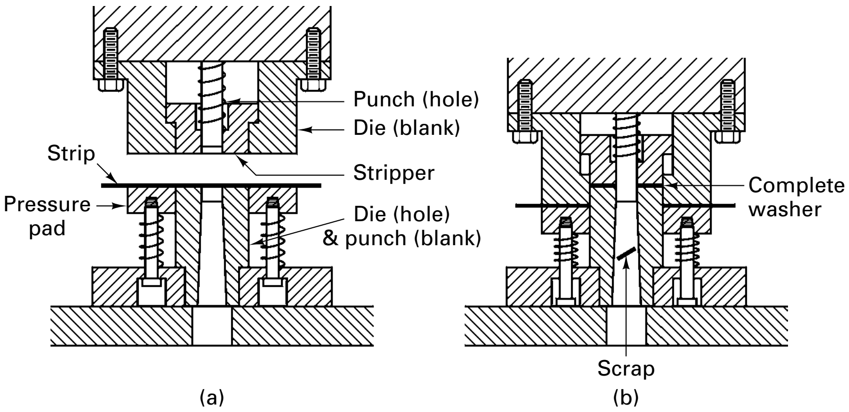

FIGURE 17-18 Method for making a simple washer in a compound piercing and blanking die. Part is blanked (a) and subsequently pierced (b) in the same stroke. The blanking punch contains the die for piercing.

DESIGN FOR PIERCING AND BLANKING

The construction, operation, and maintenance of piercing and blanking dies can be greatly facilitated if designers of the parts to be fabricated keep a few simple rules in mind:

1. Diameters of pierced holes should not be less than the thickness of the metal, with a minimum of 0.3 mm (0.025 in.). Smaller holes can be made, but with difficulty.
2. The minimum distance between holes, or between a hole and the edge of the stock, should be at least equal to the metal thickness.
3. The width of any projection or slot should be at least 1 times the metal thickness and never less than 2.5 mm ($\frac{3}{32}$ in.).
4. Keep tolerances as large as possible. Tolerances below about 0.075 mm (0.003 in.) will require shaving.
5. Arrange the pattern of parts on the strip to minimize scrap.

17.3 BENDING

Bending is the plastic deformation of metals about a linear axis with little or no change in the surface area. Multiple bends can be made simultaneously, but to be classified as true bending, and treatable by simple bending theory, each axis must be linear and independent of the others. If multiple bends are made with a single die, the process is often called *forming*. When the axes of deformation are not linear or are not independent, the processes are known as *drawing* and/or *stretching*, and these operations will be treated later in the chapter.

As shown in Figure 17-19, simple bending causes the metal on the outside to be stretched while that on the inside is compressed. The location that is neither stretched nor compressed is known as the *neutral axis* of the bend. Since the yield strength of metals in compression is somewhat higher than the yield strength in tension, the metal on the outer side yields first, and the neutral axis is displaced from the midpoint of the material. The neutral axis is generally located between one-third and one-half of the way from the inner surface, depending on the bend radius and the material being bent. Because of this lack of symmetry and the dominance of tensile deformation, the metal is generally thinned at the bend. In a linear bend, thinning is greatest in the center of the sheet and less near the free edges, where inward movement can provide some compensation.

On the inner side of a bend, the compressive stresses can induce upsetting and a companion thickening of material. While this thickening somewhat offsets the thinning of the outer section, the upsetting can also produce an outward movement of the free edges. This contraction of the tensile segment and expansion of the compression segment can produce significant distortion of the edge surfaces that terminate a linear bend. This distortion is particularly pronounced when bends are produced across the width of thick but narrow plates.

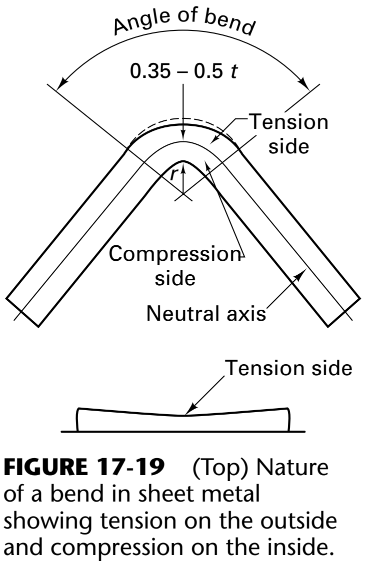

FIGURE 17-19 (Top) Nature of a bend in sheet metal showing tension on the outside and compression on the inside. (Bottom) The upper portion of the bend region, viewed from the side, shows how the center portion will thin more than the edges.

Still another consequence of the combined tension and compression is the elastic recovery that occurs when the bending load is removed. The stretched region contracts

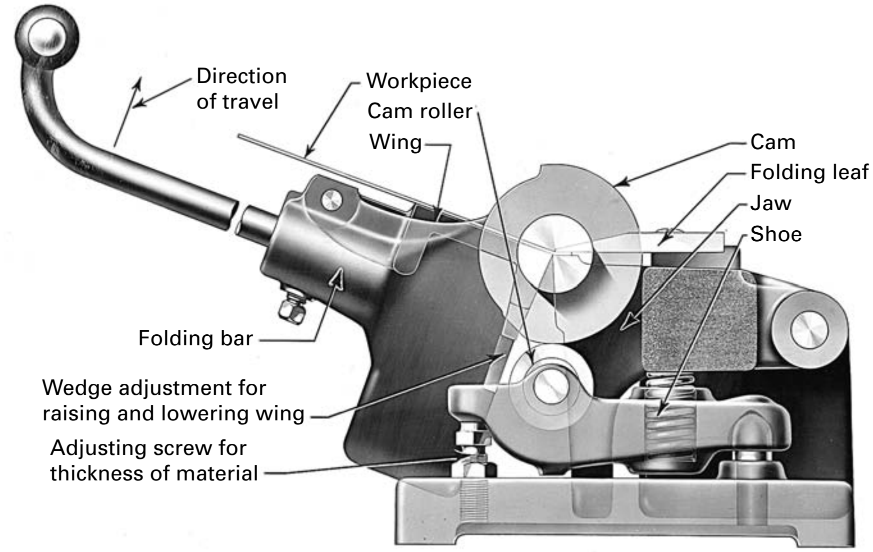

FIGURE 17-20 Phantom section of a bar folder, showing position and operation of internal components. *(Courtesy of Niagara Machine and Tool Works, Buffalo, NY)*

and the compressed region expands, resulting in a small amount of "unbending," known as *springback*. To produce a product with a specified angle, the metal must be overbent by an amount equal to the subsequent springback. The actual amount of springback will vary with a number of factors, including the type of material and material thickness.

ANGLE BENDING (BAR FOLDER AND PRESS BRAKE)

Machines like the *bar folder*, shown in Figure 17-20, can be used to make angle bends up to 150° in sheet metal under 1.5 mm ($\frac{1}{16}$ in.) thick. The workpiece is inserted under the folding leaf and aligned in the proper position. Raising the handle then actuates a cam, causing the leaf to clamp the sheet. Further movement of the handle bends the metal to the desired angle. These manually operated machines can be used to produce linear bends up to about 3.5 m (12 ft) in length.

Bends in heavier sheet or more complex bends in thin material are generally made on *press brakes*, like the one shown in Figure 17-21. These are mechanical or hydraulic presses with a long, narrow bed and short strokes. The metal is bent between interchangeable dies that are attached to both the bed and the ram. As illustrated in Figures 17-21 and 17-22, different dies can be used to produce many types of bends. The metal can be repositioned between strokes to produce complex contours or repeated

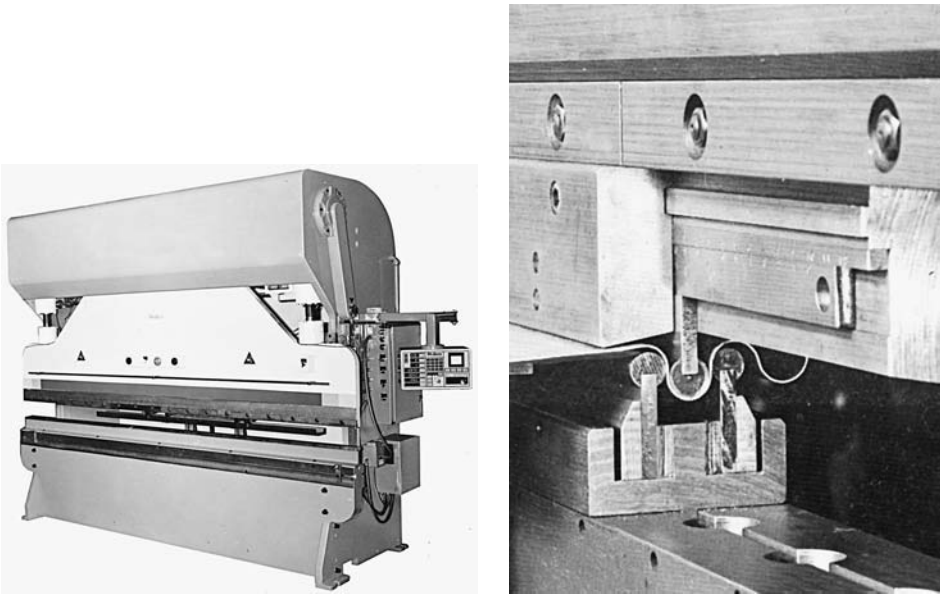

FIGURE 17-21 (Left) Press brake with CNC gauging system. *(Courtesy of DiAcro Division, Acrotech Inc., Lake City, MN.)* (Right) Close-up view of press brake dies forming corrugations. *(Courtesy of Cincinnati Incorporated, Cincinnati, OH.)*

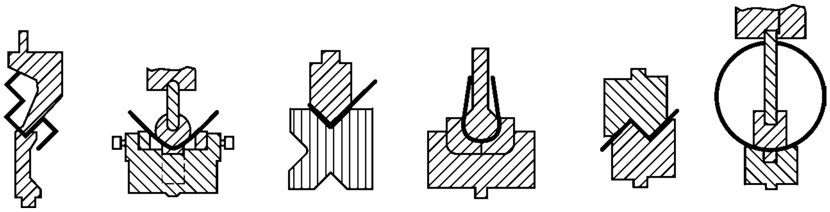

FIGURE 17-22 Press brake dies can form a variety of angles and contours. *(Courtesy of Cincinnati Incorporated, Cincinnati, OH.)*

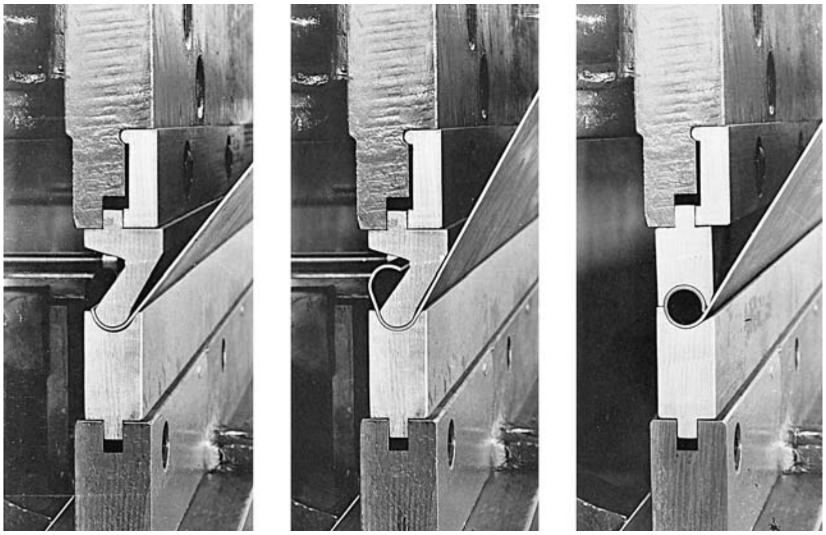

FIGURE 17-23 Dies and operations used in the press brake forming of a roll bead. *(Courtesy of Cincinnati Incorporated, Cincinnati, OH.)*

bends, such as corrugations. Figure 17-23 shows how a roll bead can be formed with repeated strokes, repositioning, and multiple sets of tooling. Seaming, embossing, punching, and other operations can also be performed with press brakes, but these operations can usually be done more efficiently on other types of equipment.

The tools and support structures on a press brake are often loaded in the same three-point bending discussed in Chapter 16 for rolling mill rolls. Elastic deflections can cause a variety of bend deviations and defects, and a number of means have been developed to overcome the problems.

DESIGN FOR BENDING

Several factors must be considered when designing parts that are to be shaped by bending. One of the primary concerns is determining the smallest bend radius that can be formed without metal cracking (i.e., the *minimum bend radius*). This value is dependent on both the ductility of the metal (as measured by the percent reduction in area observed in a standard tensile test) and the thickness of the material being bent. Figure 17-24 shows how the ratio of the minimum bend radius R to the thickness of the material t varies with material ductility. As this plot reveals, an extremely ductile material is required if we wish to produce a bend with radius less than the thickness of the metal. If possible, bends should be designed with large bend radii. This permits easier forming and allows the designer to select from a wider variety of engineering materials.

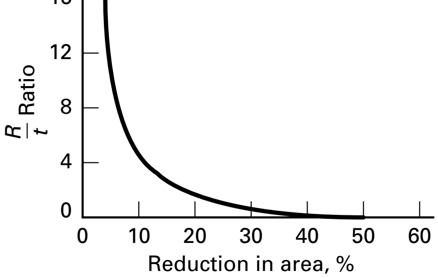

FIGURE 17-24 Relationship between the minimum bend radius (relative to thickness) and the ductility of the metal being bent (as measured by the reduction in area in a uniaxial tensile test).

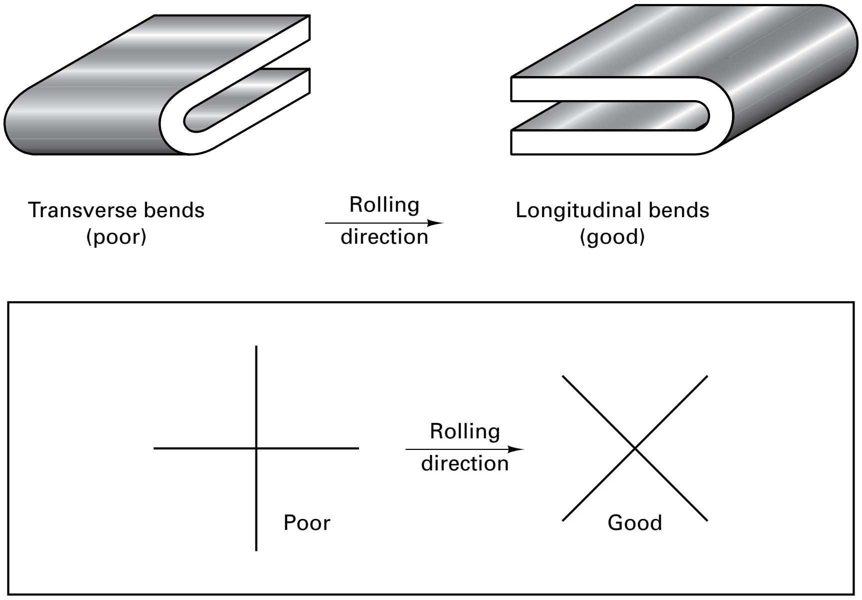

FIGURE 17-25 Bends should be made with the bend axis perpendicular to the rolling direction. When intersecting bends are made, both should be at an angle to the rolling direction, as shown.

If the punch radius is large and the bend angle is shallow, large amounts of springback are often encountered. The sharper the bend, the more likely the surfaces will be stressed beyond the yield point. Less severe bends have large amounts of elastically stressed material and large amounts of springback. In general, when the bend radius is greater than 4 times the material thickness, the tooling or process must provide springback compensation.

If the metal has experienced previous cold work or has marked directional properties, these features should be considered when designing the bending operation. Whenever possible, it is best to make the bend axis perpendicular to the direction of previous working, as shown in the upper portion of Figure 17-25. The explanation for this recommendation has little to do with the grain structure of the metal, but is more closely related to the mechanical loading applied to the weak, oriented inclusions. Cracks can easily start along tensile-loaded inclusions and propagate to full cracking of the bend. If intersecting or perpendicular bends are required, it is often best to place each at an angle to the rolling direction, as shown in the lower portion of Figure 17-25, rather than have one longitudinal and one transverse.

Another design concern is determining the dimensions of a flat blank that will produce a bent part of the desired precision. As discussed earlier in the chapter, metal tends to thin and lengthen when it is bent. The amount of lengthening is a function of both the stock thickness and the bend radius. Figure 17-26 illustrates one method that has been found to give satisfactory results for determining the blank length for bent products. In addition, the minimum length of any protruding leg should be at least equal to the bend radius plus 1.5 times the thickness of the metal.

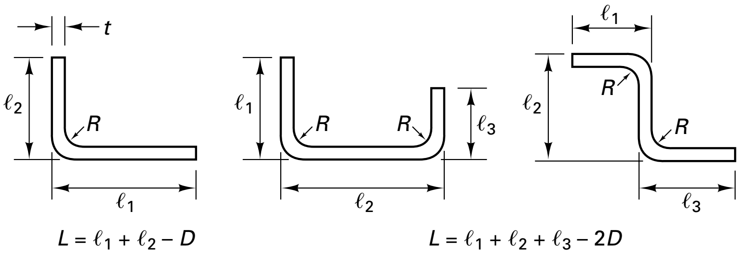

For R equal	Let D equal
t	$1.7\,t$
$2\,t$	$2.0\,t$
$3\,t$	$2.5\,t$

FIGURE 17-26 One method of determining the starting blank size (L) for several bending operations. Due to thinning, the product will lengthen during forming. l_1, l_2, and l_3 are the desired product dimensions. See table to determine D based on size of radius R where t is the stock thickness.

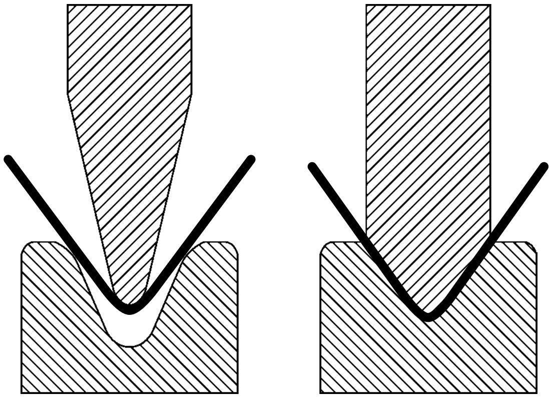

FIGURE 17-27 Comparison of air-bend (left) and bottoming (right) press brake dies. With the air-bend die, the amount of bend is controlled by the bottoming position of the upper die.

Whenever possible, the tolerance on bent parts should not be less than 0.8 mm ($\frac{1}{32}$ in.). Bends of 90° or greater should not be specified without first determining whether the material and bending method will permit them. Parts with multiple bends should be designed with most (or preferably all) of them of the same bend radius. This will reduce setup time and tooling costs. Consideration should also be given to providing regions for adequate clamping or support during manufacture. Bending near the edge of a material will distort the edge. If an undistorted edge is required, additional material must be included and a trimming operation performed after bending.

AIR-BEND, BOTTOMING, AND COINING DIES

Yet another design decision is the use of air-bend, bottoming, or coining dies. As shown in Figure 17-27, *bottoming dies* contact and compress the full area within the tooling. The angle of the resulting bend is set by the geometry of the tooling, adjusted for subsequent springback, and the inside bend radius is that machined on the nose of the punch. Bottoming dies are designed for a specific material and material thickness, and they form bends of a single configuration. If the results are outside specifications, or the material is changed and produces a different amount of springback, the geometry of the tooling will have to be modified. Once the geometry of the tool is successfully set, however, reproducibility of the bend geometry is excellent, provided there is consistency within the size and properties of the material being bent.

In contrast, *air-bend dies* produce the desired geometry by simple three-point bending. Since the resulting angle is controlled by the bottoming position of the upper die, a single set of tooling can produce a range of bend geometries from 180° through the included angle of the die. Air bending can also accommodate a variety of materials in a range of material gages, and it requires the least force of the three options. Product reproducibility depends on the ability to control the stroke of the press. Adaptive control and on-the-fly corrections are frequently used with air-bend tooling.

If bottoming dies continue to move beyond the full-contact position, the thickness of the bent material is reduced. Because of the extensive plastic deformation, the operation becomes one of *coining*. Springback can be significantly reduced, and more consistent results can be achieved with materials having variation in structure and thickness. Unfortunately, the loading is greatly increased on both the press and the tools.

Reproducible-stroke mechanical presses are generally used for bottom bending and coining, while adjustable-stroke hydraulic presses are preferred for air bending.

ROLL BENDING

Roll bending is a continuous form of three-point bending where plates, sheets, beams, pipe, and even rolled shapes and extrusions are bent to a desired curvature using forming rolls. As shown in Figure 17-28, roll-bending machines usually have three rolls in the form of a triangle. The two lower rolls are driven, and the position of the upper roll is adjusted to control the degree of curvature in the product. The rolls on the machine pictured in Figure 17-28 are supported on only one end. When wider material is being formed, the longer rolls often require support on both ends. The support frame on one

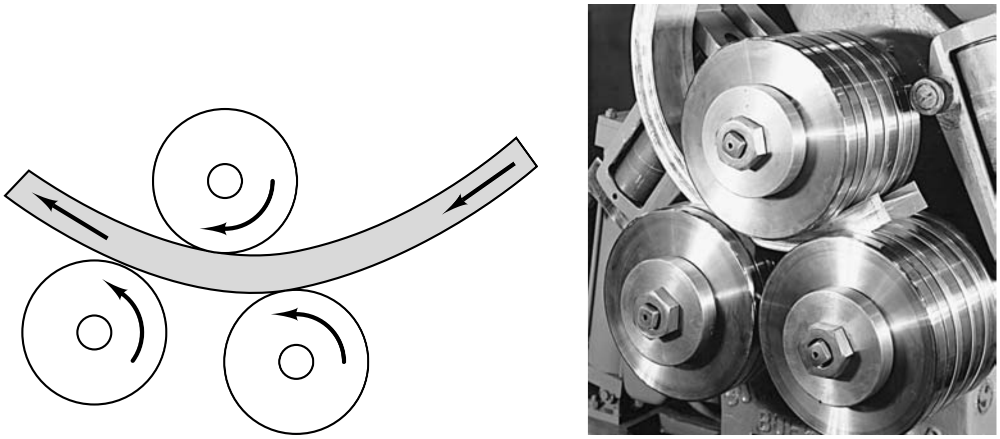

FIGURE 17-28 (Left) Schematic of the roll-bending process; (right) the roll bending of an I-beam section. Note how the material is continuously subjected to three-point bending. *(Courtesy of Buffalo Forge Company, Buffalo, NY.)*

end may be swung clear, however, to permit the removal of closed circular shapes or partially rolled product. Because of the variety of applications, roll-bending machines are available in a wide range of sizes, some being capable of bending plate up to 25 cm (10 in.) thick.

DRAW BENDING, COMPRESSION BENDING, AND PRESS BENDING

Bending machines can also utilize clamps and pressure tools to bend material against a form block. In *draw bending*, illustrated in Figure 17-29, the workpiece is clamped against a bending form and the entire assembly is rotated to draw the workpiece along a stationary pressure tool. In *compression bending*, also illustrated in Figure 17-29, the bending form remains stationary and the pressure tool moves along the surface of the workpiece.

Press bending, also shown in Figure 17-29, utilizes a downward-descending bend die, which pushes into the center of material that is supported on either side by wing dies. As the ram descends, the wing dies pivot up, bending the material around the form on the ram. The flexibility of each of the above processes is somewhat limited because a certain length of the product must be used for clamping.

TUBE BENDING

Quite often the material being bent is a tube or pipe, and this geometry presents additional problems. Key parameters are the outer diameter of the tube, the wall thickness, and the radius of the bend. Small-diameter, thick-walled tubes usually present little difficulty. As the outer diameter increases, the wall thickness decreases or the bend radius becomes smaller, the outside of the tube tends to pull to the center, flattening the tube, and the inside surface may wrinkle. For many years, a common method of overcoming these problems was to pack the tube with wet sand, produce the bend, and then remove the sand from the interior. Flexible mandrels have now replaced the sand and are currently available in a wide variety of styles and sizes.

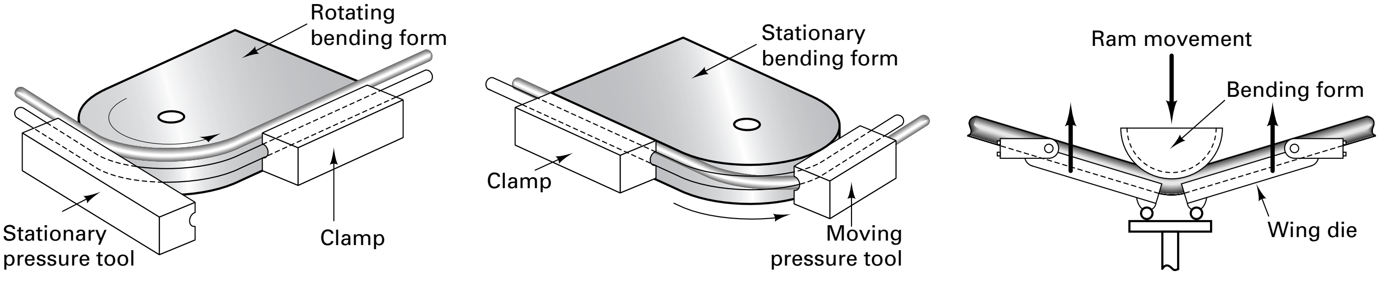

(a) Draw bending (b) Compression bending (c) Press bending

FIGURE 17-29 (a) Draw bending, in which the form block rotates; (b) compression bending, in which a moving tool compresses the workpiece against a stationary form; (c) press bending, where the press ram moves the bending form.

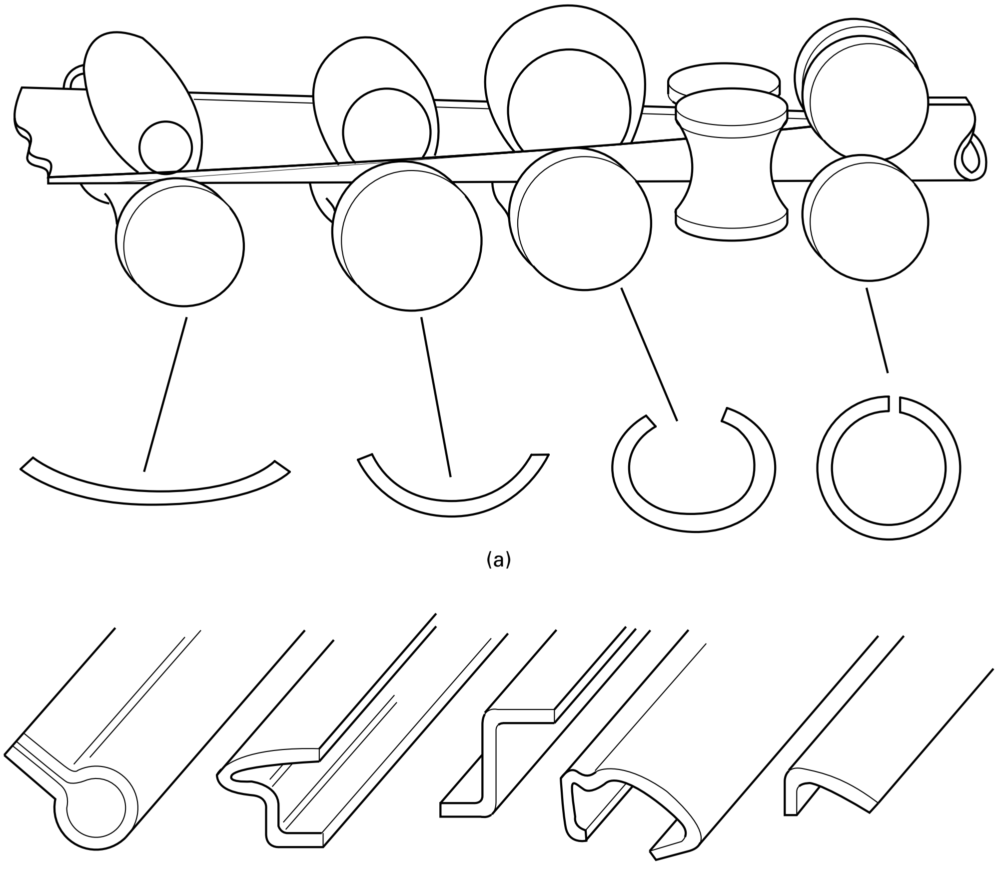

FIGURE 17-30 (a) Schematic representation of the cold roll-forming process being used to convert sheet or plate into tube. (b) Some typical shapes produced by roll forming.

ROLL FORMING

The continuous *roll forming* of flat strip into complex sections has become a highly developed forming technique that competes directly with press brake forming, extrusion, and stamping. As shown in Figures 17-30 and 17-31, the process involves the progressive bending of metal strip as it passes through a series of forming rolls at speeds up to 80 m/min (270 ft/min). Only bending takes place, and all bends are parallel to one another. The thickness of the starting material is preserved, except for thinning at the bend radii.

Any material that can be bent can be roll formed—including cold-rolled, hot-rolled, polished, prepainted, coated, and plated metals—in thicknesses ranging from 0.1 through 20 mm (0.005 through $\frac{3}{4}$ in.). A variety of moldings, channeling, gutters and downspouts, automobile beams and bumpers, and other shapes of uniform wall thickness and uniform cross section are now being formed.

By changing the rolls, a single roll-forming machine can produce a wide variety of different shapes. However, changeover, setup, and adjustment may take several hours, so a production run of at least 3000 m (10,000 ft) is usually required for any given product. To produce pipe or tubular products, a resistance welding unit or seaming operation is often integrated with the roll forming.

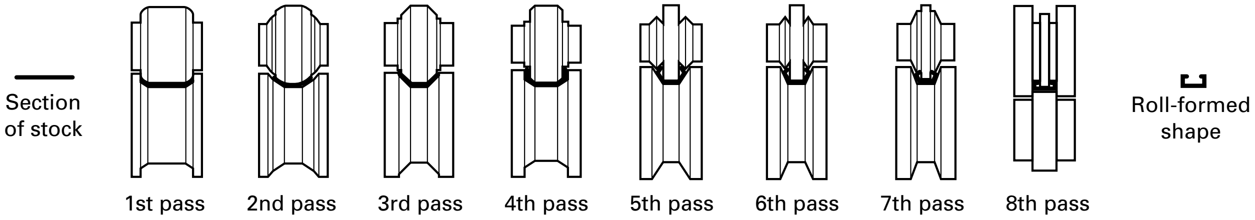

FIGURE 17-31 Eight-roll sequence for the roll forming of a box channel. *(Courtesy of the Aluminum Association, Washington, DC.)*

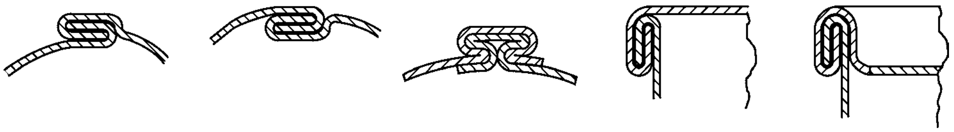

FIGURE 17-32 Various types of seams used on sheet metal.

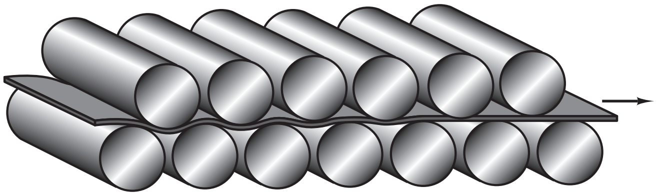

FIGURE 17-33 Method of straightening rod or sheet by passing it through a set of straightening rolls. For rods, another set of rolls is used to provide straightening in the transverse direction.

SEAMING AND FLANGING

Seaming is a bending operation that can be used to join the ends of sheet metal in some form of mechanical interlock. Figure 17-32 shows several of the more common seam designs that can be formed by a series of small rollers. Seaming machines range from small hand-operated types to large automatic units capable of producing hundreds of seams per minute. Common products include cans, pails, drums, and other similar containers.

Flanges can be rolled on sheet metal in essentially the same manner as seams. In many cases, however, the forming of both flanges and seams is a drawing operation, since the bending can occur along a curved axis.

STRAIGHTENING

The objective of *straightening* or *flattening* is the opposite of bending, and these operations are often performed before subsequent forming to ensure the use of flat or straight material that is reasonably free of residual stresses. *Roll straightening* or *roller leveling*, illustrated in Figure 17-33, subjects the material to a series of reverse bends. The rod, sheet, or wire is passed through a series of rolls with progressively decreased offsets from a straight line. As the material is bent, first up and then down, the surfaces are stressed beyond their elastic limit, replacing any permanent set with a flat or straight profile. Tension applied along the length of the product can help induce the required deformation.

Sheet material can also be straightened by a process called *stretcher leveling.* Finite-length sheets are gripped mechanically and stretched beyond the elastic limit to produce the desired flatness.

17.4 DRAWING AND STRETCHING PROCESSES

The term *drawing* can actually refer to two quite different operations. The drawing of wire, rod, and tube, presented in Chapter 16, refers to processes that reduce the cross section of material by pulling it through a die. When the starting material is sheet, drawing refers to a family of operations where plastic flow occurs over a curved axis and the flat sheet is formed into a recessed, three-dimensional part with a depth more than several times the thickness of the metal. These operations can be used to produce a wide range of shapes, from small cups to large automobile and aerospace panels.

SPINNING

Spinning is a cold-forming operation where a rotating disk of sheet metal is progressively shaped over a male form, or mandrel, to produce rotationally symmetrical shapes, such as cones, hemispheres, cylinders, bells, and parabolas. A form block possessing the shape of the desired part is attached to a rotating spindle, such as the drive section of a simple lathe. A disk of metal is centered on the small end of the form and held in place by a pressure pad. As the disk and form rotate, localized pressure is applied through a round-ended wooden or metal tool or small roller that traverses the entire surface of the part, causing it to

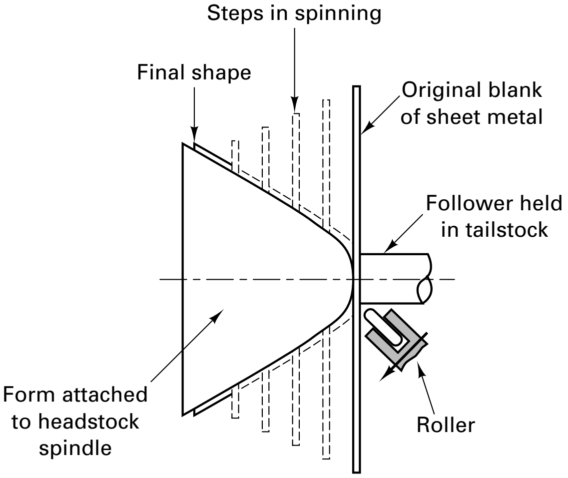

FIGURE 17-34 Progressive stages in the spinning of a sheet metal product.

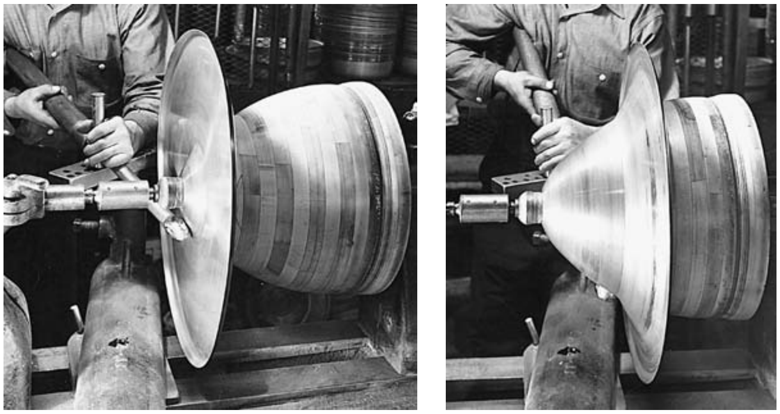

FIGURE 17-35 Two stages in the spinning of a metal reflector. *(Courtesy of Spincraft, Inc., New Berlin, WI.)*

flow progressively against the form. Figure 17-34 depicts the progressive operation, and Figure 17-35 shows a part at two stages of forming. Because the final diameter of the final part is less than that of the starting disk, the circumferential length decreases. This decrease must be compensated by either an increase in thickness, a radial elongation, or circumferential buckling. Control of the process is often dependent on the skill of the operator.

During spinning, the form block sees only localized compression, and the metal does not move across it under pressure. As a result, form blocks can often be made of hardwood or even plastic. The primary requirement is simply to replicate the shape with a smooth surface. As a result, tooling cost can be extremely low, making spinning an attractive process for producing small quantities of a single part. With automation, spinning can also be used to mass-produce such high-volume items as lamp reflectors, cooking utensils, bowls, and the bells of some musical instruments. When large quantities are produced, a metal form block is generally preferred.

Spinning is usually considered for simple shapes that can be directly withdrawn from a one-piece form. More complex shapes, such as those with reentrant angles, can be spun over multipiece or offset forms. Complex form blocks can also be made from frozen water, which is melted out of the product after spinning.

SHEAR FORMING OR FLOW TURNING

Cones, hemispheres, and similar shapes are often formed by *shear forming* or *flow turning*, a modification of the spinning process in which each element of the blank maintains its distance from the axis of rotation. Since there is no circumferential shrinkage, the metal flow is entirely by shear and no compensating stretch has to occur. As shown in Figure 17-36, the wall thickness of the product, t_c, will vary with the angle of the particular region according to the relationship: $t_c = t_b \sin \alpha$, where t_b is the thickness of the

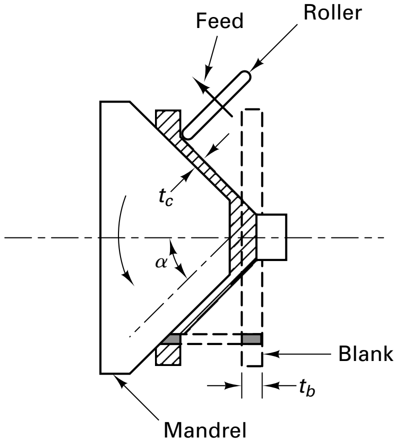

FIGURE 17-36 Schematic representation of the basic shear-forming process.

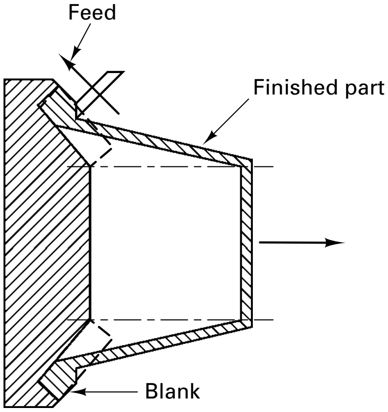

FIGURE 17-37 Forming a conical part by reverse shear forming.

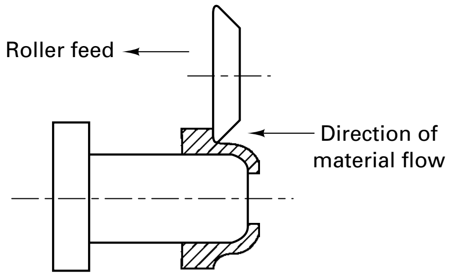

FIGURE 17-38 Shear forming a cylinder by the direct process.

starting blank. If α is less than 30°, it may be necessary to complete the forming in two stages with an intermediate anneal in between. Reductions in wall thickness as high as 8:1 are possible, but the limit is usually set at about 5:1, or 80%.

Conical shapes are usually shear formed by the direct process depicted in Figure 17-36. The bottom of the product is held against the face of the form block or mandrel, while the material being formed moves in the same direction as the roller. Products can also be formed by a reverse process, like that illustrated in Figure 17-37. By controlling the position and feed of the forming rollers, the reverse process can be used to shape concave, convex, or conical parts without a matching form block or mandrel. Cylinders can be shear formed by both the direct and reverse processes. As shown in Figure 17-38, the direct process restricts the length of the product to the length of the mandrel. No schematic is provided for the reverse process because it is essentially the same as the roll-extrusion process, depicted in Figure 16-51.

STRETCH FORMING

Stretch forming, illustrated in principle in Figure 17-39, is an attractive means of producing large sheet metal parts in low or limited quantities. A sheet of metal is gripped by two or more sets of jaws that stretch it and wrap it around a single form block. Various combinations of stretching, wrapping, and block movements can be employed, depending on the shape of the part.

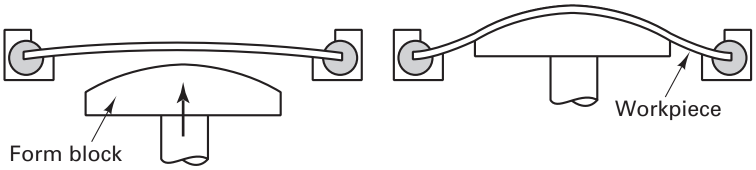

FIGURE 17-39 Schematic of a stretch-forming operation.

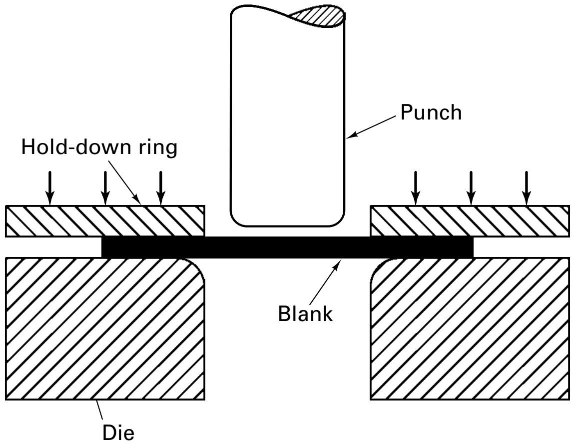

FIGURE 17-40 Schematic of the deep-drawing process.

Because most of the deformation is induced by the tensile stretching, the forces on the form block are far less than those normally encountered in bending or forming. Consequently, there is very little springback, and the workpiece conforms very closely to the shape of the tool. Since stretching accompanies bending or wrapping, wrinkles are pulled out before they occur. Because the forces are so low, the form blocks can often be made of wood, low-melting-point metal, or even plastic.

Stretch forming, or *stretch-wrap forming* as it is often called, is quite popular in the aircraft industry and is frequently used to form aluminum and stainless steel into cowlings, wing tips, scoops, and other large panels. Low-carbon steel can be stretch formed to produce large panels for the automotive and truck industry. If mating male and female dies are used to shape the metal while it is being stretched, the process is known as *stretch-draw forming*.

DEEP DRAWING AND SHALLOW DRAWING

The forming of solid-bottom cylindrical or rectangular containers from metal sheet is one of the most widely used manufacturing processes. When the depth of the product is less than its diameter (or the smallest dimension of its opening), the process is considered to be *shallow drawing*. If the depth is greater than the diameter, it is known as *deep drawing*.

Consider the simple operation of converting a circular disk of sheet metal into a flat-bottom cylindrical cup. Figure 17-40 shows the blank positioned over a die opening and a circular punch descending to pull or draw the material into the die cavity. The material beneath the punch remains largely unaffected and simply becomes the bottom of the cup. The cup wall is formed by pulling the remainder of the disk inward and over the radius of the die, as shown in Figure 17-41. As the material is pulled inward, its circumference decreases. Since the volume of material must remain constant, the decrease in circumferential dimension must be compensated by an increase in another dimension, such as thickness or radial length. Since the material is thin, an alternative is to relieve the circumferential compression by buckling or wrinkling. Wrinkle formation can be suppressed, however, by compressing the sheet between the die and a blankholder surface during the forming.

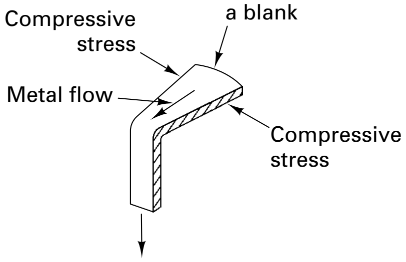

FIGURE 17-41 Flow of material during deep drawing. Note the circumferential compression as the radius is pulled inward.

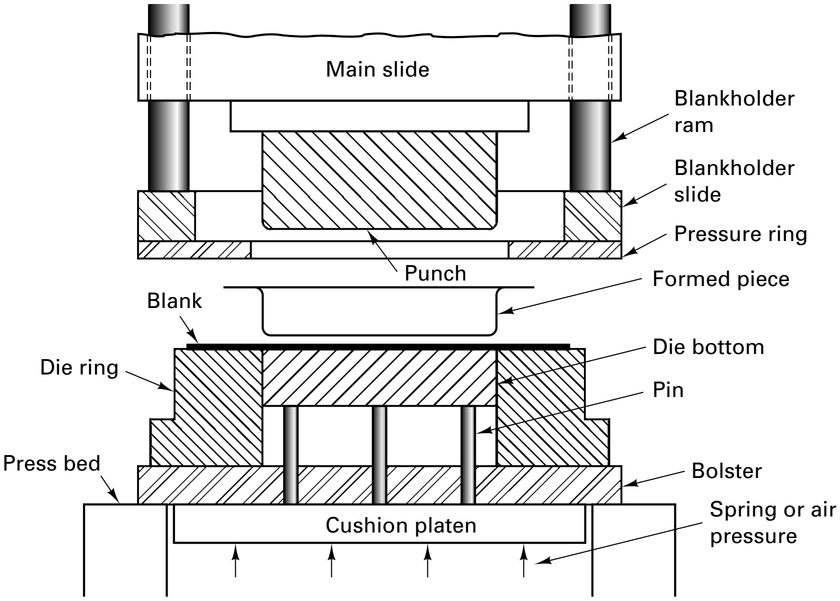

FIGURE 17-42 Drawing on a double-action press, where the blankholder uses the second press action.

In single-action presses, where there is only one movement that is available, springs or air pressure are often used to clamp the metal between the die and pressure ring. When multiple actions are available (two or more independent motions), as shown in Figure 17-42, the hold-down force can now be applied in a manner that is independent of the punch position. This restraining force can also be varied during the drawing operation. For this reason, multiple-action presses are usually specified for the drawing of more complex parts, while single-action presses can be used for the simpler operations.

Key variables in the deep-drawing process include the blank diameter and the punch diameter (which combine to determine the *draw ratio* and the height of the side walls), the die radius, the punch radius, the clearance between the punch and the die, the thickness of the blank, lubrication, and the hold-down pressure. Once a process has been designed and the tooling manufactured, the primary variable for process adjustment is the *hold-down pressure* or *blankholder force*. If the force or pressure is too low, wrinkling may occur at the start of the stroke. If it is too high, there is too much restraint, and the descending punch will simply tear the disk or some portion of the already-formed cup wall.

When drawing a shallow cup, there is little change in circumference, and a small area is being confined by the blankholder. As a result, the tendency to wrinkle or tear is low. As cup depth increases, there is an increased tendency for forming both of the defects. In a similar manner, thin material is more likely to wrinkle or tear than thick material. Figure 17-43 summarizes the effects of cup depth, blank thickness, and

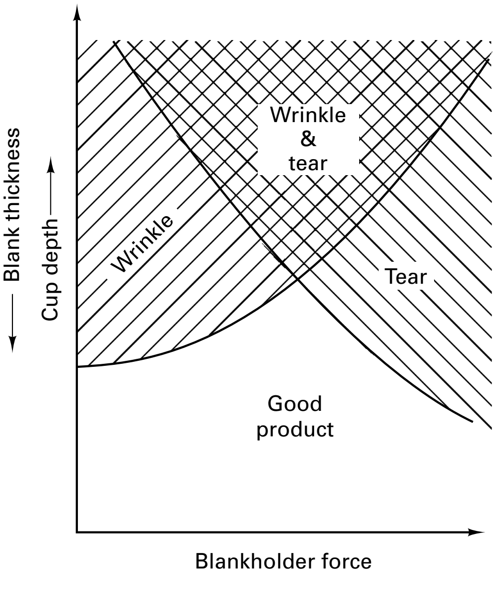

FIGURE 17-43 Defect formation in deep drawing as a function of blankholder force, blank thickness, and cup depth.

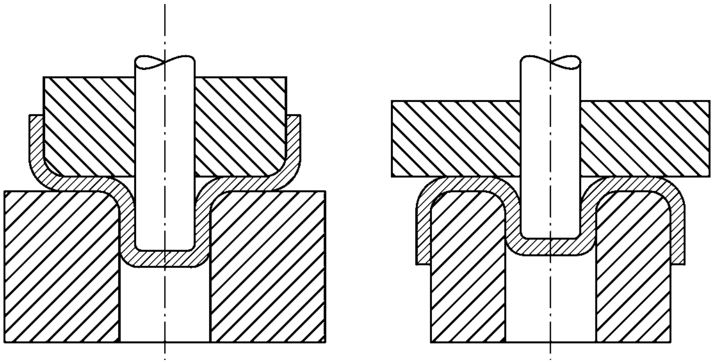

FIGURE 17-44 Cup redrawing to further reduce diameter and increase wall height. (Left) forward redraw; (right) reverse redraw.

blankholder pressure. Note that for thin materials and deep draws, a defect-free product may not be possible in a single operation, as the defects simply transition from wrinkling, to wrinkle plus tear, to just tearing as blankholder force is increased. To produce a defect-free product, the draw ratio is often limited to values less than about 2.2.

The limitations of wrinkling and tearing can often be overcome by using multiple operations. Figure 17-44 shows two alternatives for converting drawn parts into deeper cups. In the *forward redraw* option, the material undergoes reverse bending as it flows into the die. In *reverse redrawing*, the starting cup is placed over a tubular die, and the punch acts to turn it inside out. Since all bending is in one direction, reverse redraws can produce greater changes in diameter.

When the part geometry becomes more complex, as with rectangular or asymmetric parts, it is best if the surface area and thickness of the material can remain relatively constant. Different regions may need to be differentially constrained. One technique that can produce variable constraint is the use of *draw beads*, vertical projections and matching grooves in the die and blankholder. The added force of bending and unbending as the material flows over the draw bead restricts the flow of material. The degree of constraint can be varied by adjusting the height, shape, and size of the bead and bead cavity.

Because of prior rolling and other metallurgical and process features, the flow of sheet metal is generally not uniform, even in the simplest drawing operation. Excess material may be required to assure final dimensions, and *trimming* may be required to establish both the size and uniformity of the final part. Figure 17-45 shows a shallow-drawn part before and after trimming. Trimming obviously adds to the production cost because it not only converts some of the starting material to scrap but also adds another operation to the manufacturing process, one that must be performed on an already-produced shape.

FORMING WITH RUBBER TOOLING OR FLUID PRESSURE

Blanking and drawing operations usually require mating male and female, or upper and lower, die sets, and process setup requires that the various components be properly positioned and aligned. When the amount of deformation is great, multiple operations may

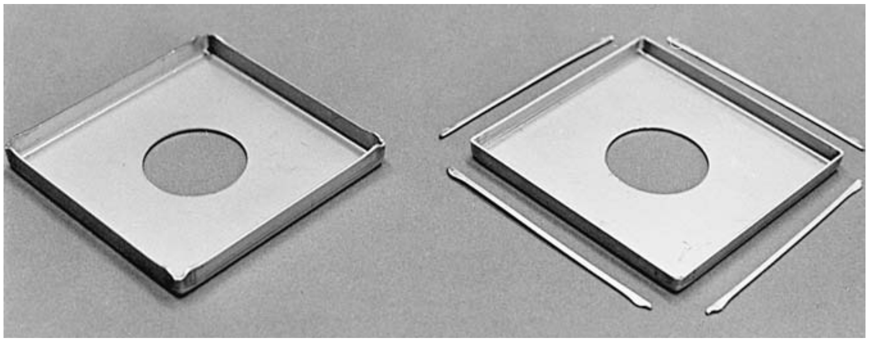

FIGURE 17-45 Pierced, blanked, and drawn part before and after trimming.

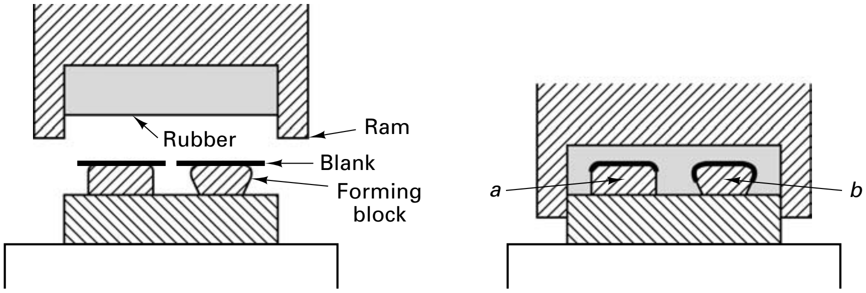

FIGURE 17-46 The Guerin process for forming sheet metal products.

be required, each with its own set of dedicated tooling, and intermediate anneals may also be necessary. Numerous processes have been developed that seek to (1) reduce tooling cost, (2) decrease setup time and expense, or (3) extend the amount of deformation that can be performed with a single set of tools. Although most of these methods have distinct limitations, such as complexity of shape or types of metal that can be formed, they also have definite areas of application.

Several forming methods replace either the male or female member of the die set with rubber or fluid pressure. The *Guerin process* (also known as rubber-die forming) is depicted in Figure 17-46. It is based on the phenomenon that rubber of the proper consistency, *when totally confined*, acts as a fluid and transmits pressure uniformly in all directions. Blanks of sheet metal are placed on top of form blocks, which can be made of wood, Bakelite, polyurethane, epoxy, or low-melting-point metal. The upper ram contains a pad of rubber 20 to 25 cm (8 to 10 in.) thick mounted within a steel container. As the ram descends, the rubber pad becomes confined and transmits force to the metal, causing it to bend to the desired shape. Since no female die is used and inexpensive form blocks replace the male die, the total tooling cost is quite low. There are no mating tools to align, process flexibility is quite high (different shapes can even be formed at the same time), wear on the material and tooling is low, and the surface quality of the workpiece is easily maintained, a feature that makes the process attractive for forming prepainted or specially coated sheet. When reentrant sections are produced (as with product *b* in Figure 17-46), it must be possible to slide the parts lengthwise from the form blocks or to disassemble a multipiece form from within the product.

The Guerin process was developed by the aircraft industry, where the production of small numbers of duplicate parts clearly favors the low cost of tooling. It can be used on aluminum sheet up to 3 mm ($\frac{1}{8}$ in.) thick and on stainless steel up to 1.5 mm ($\frac{1}{16}$ in.). Magnesium sheet can also be formed if it is heated and shaped over heated form blocks.

Most of the forming done with the Guerin process is multiple-axis bending, but some shallow drawing can also be performed. The process can also be used to pierce or blank thin gages of aluminum, as illustrated in Figure 17-47. For this application the blanking blocks are shaped the same as the desired workpiece, with a sharp face, or edge, of hardened steel. Round-edge supporting blocks are positioned a short distance from the blanking blocks to support the scrap skeleton and permit the metal to bend away from the sheared edges.

In *bulging*, fluid or rubber transmits the pressure required to expand a metal blank or tube outward against a split female mold or die. For simple shapes, rubber tooling can

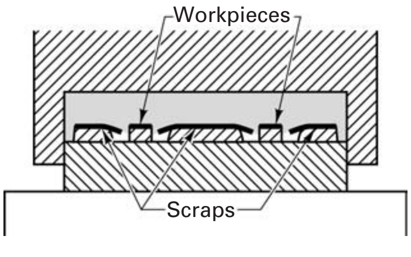

FIGURE 17-47 Method of blanking sheet metal using the Guerin process.

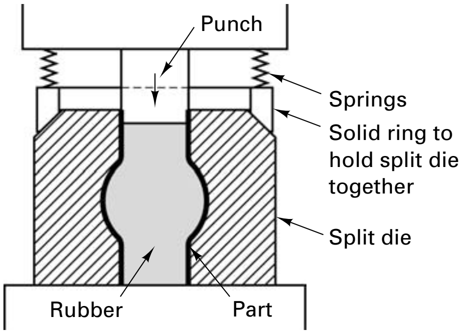

FIGURE 17-48 Method of bulging tubes with rubber tooling.

be inserted, compressed, and then easily removed, as shown in Figure 17-48. For complicated shapes, fluid pressure may be required to form the bulge. More complex equipment is required since pressurized seals must be formed and maintained, while still enabling the easy insertion and removal of material that is required for mass production.

SHEET HYDROFORMING

Sheet hydroforming is really a family of processes in which a rubber bladder backed by fluid pressure, or pockets of pressurized liquid, replaces either the solid punch or female die of the traditional tool set. In a variant known as *high-pressure flexible-die forming*, or *flexforming*, the rubber pad of the Guerin process is replaced by a flexible rubber diaphragm backed by controlled hydraulic pressure at values between 140 and 200 MPa (20,000 and 30,000 psi). As illustrated in Figure 17-49, the solid punch drives the sheet into the resisting bladder, whose pressure is adjusted throughout the stroke.

In a variation of this process that shares similarity to stretch forming, the sheet is first clamped against the opening and the punch is retracted downward. The fluid is then pressurized, causing the workpiece to balloon downward toward the punch. Since the pressure is uniformly distributed over the workpiece, the sheet is uniformly stretched and uniformly thinned. The punch then moves upward, causing the prestretched metal to conform to its profile.

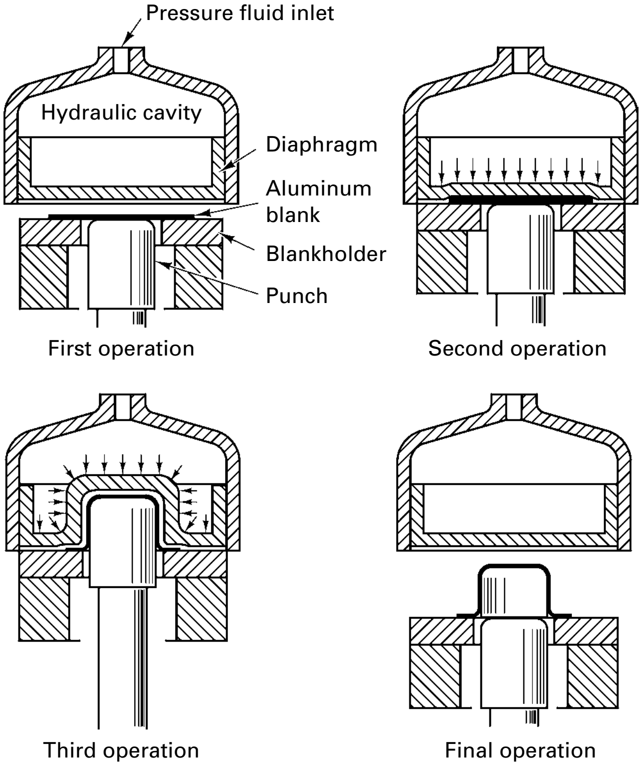

FIGURE 17-49 High-pressure flexible-die forming, showing (1) the blank in place with no pressure in the cavity; (2) press closed and cavity pressurized; (3) ram advanced with cavity maintaining fluid pressure; and (4) pressure released and ram retracted. *(Courtesy of Aluminum Association, Washington, DC)*

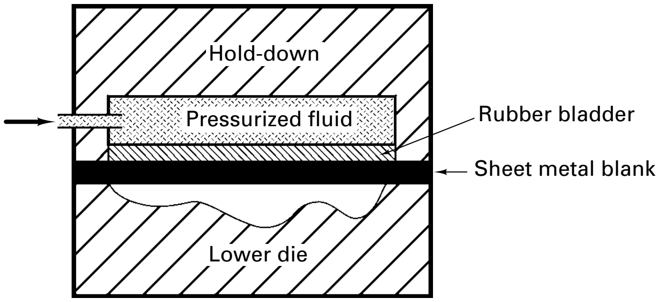

FIGURE 17-50 One form of sheet hydroforming.

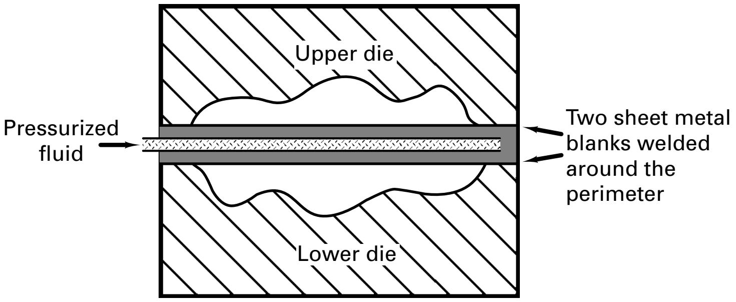

FIGURE 17-51 Two-sheet hydroforming, or pillow forming.

The flexible membrane can also be used to replace the hardened male punch, as shown in Figure 17-50. The ballooning action now causes the material to descend and conform fully to the female die, which may be made of epoxy or other low-cost material. *Parallel-plate hydroforming*, or *pillow forming*, extends the process to the simultaneous production of upper and lower contours. As shown in Figure 17-51, two sheet metal blanks are laser welded around their periphery or are firmly clamped between upper and lower dies. Pressurized fluid is then injected between the sheets, simultaneously forming both upper and lower profiles. This may be a more attractive means of producing complex sheet metal containers, since the manufacturer no longer has to cope with the problems of aligning and welding separately formed upper and lower pieces.

While the most attractive feature of sheet hydroforming is probably the reduced cost of tooling, there are other positive attributes. Because a more uniform distribution of strain is produced, materials exhibit greater formability. Drawing limits are generally about 1.5 times those of conventional deep drawing. Deeper parts can be formed without fracture, and complex shapes that require multiple operations can often be formed in a single pressing. Surface finish is excellent, and part dimensions are more accurate and more consistent.

Because the cycle times for sheet hydroforming are slow compared to mechanical presses, conventional deep drawing is preferred when the draw depth is shallow and the part is not complex. The reduced tool costs of hydroforming make the process attractive for prototype manufacturing and low-volume production (up to about 10,000 identical parts), such as that encountered in the aerospace industry. Sheet hydroforming has also attracted attention within the automotive community because of its ability not only to produce low-volume parts in an economical manner but also to successfully shape lower-formability materials, such as alloyed aluminum sheet and high-strength steels.

TUBE HYDROFORMING

Tube hydroforming, illustrated in Figure 17-52, has emerged as a significant process for manufacturing strong, lightweight, tubular components, which frequently replace an assembly of welded stampings. As shown in Figure 17-53, current automotive parts include engine cradles, frame rails, roof headers, radiator supports, and exhaust components.

In elementary terms, a tubular blank, either straight or preshaped, is placed in an encapsulating die, and the ends are sealed. A fluid is then introduced through one of the end plugs, achieving sufficient pressure to expand the material to the shape of the die. At the same time, the end closures may move inward to help compensate or

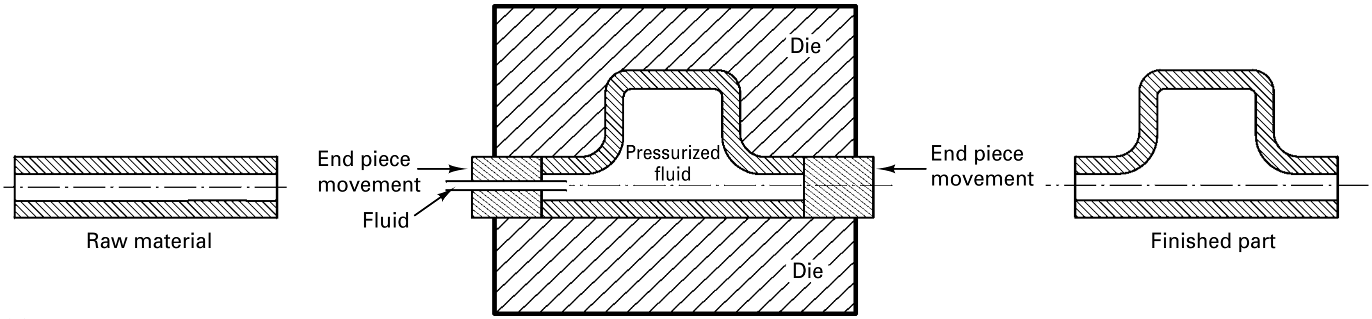

(a)

(b)

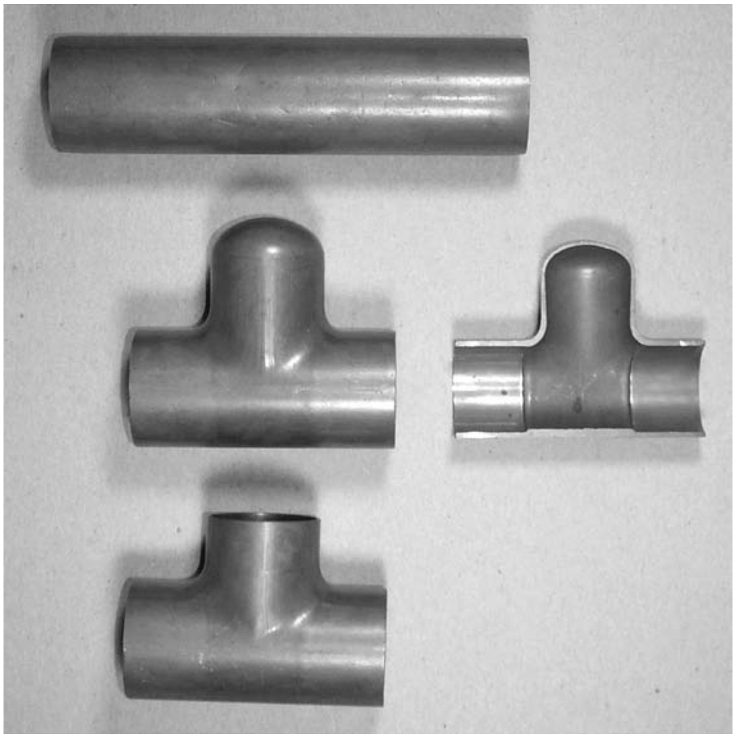

FIGURE 17-52 Tube hydroforming. (a) Process schematic; (b) actual copper product. Note the inward movement of the tube ends and the nonuniform wall thickness of the nonsymmetric product.

overcome the thinning that would otherwise accompany radial expansion. In actual operation, the process may use combinations or even sequences of internal pressure, axial motions, and even external counterpressure applied to bulging regions to control the flow and final thickness of the material. Product length is currently limited by the ability of end movements to create axial displacements within the die.

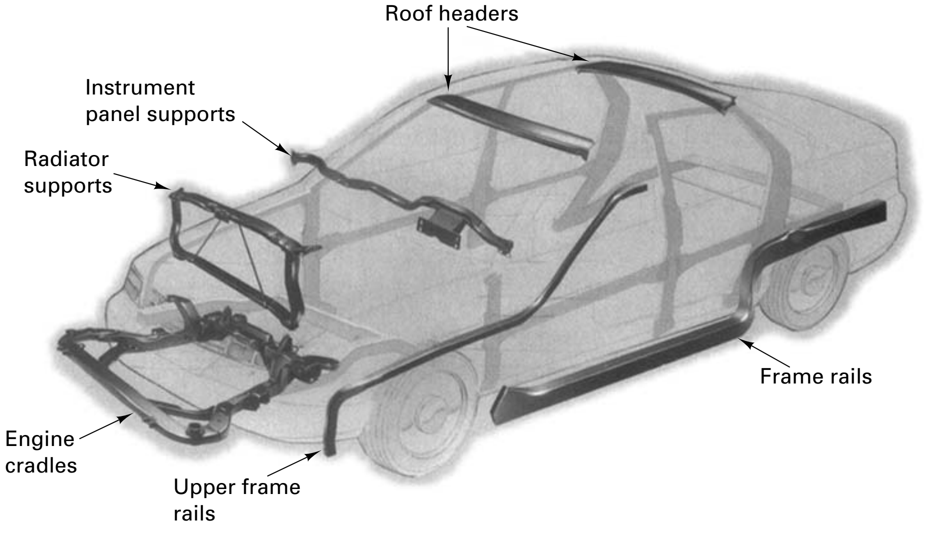

FIGURE 17-53 Use of hydroformed tubes in automotive applications. *(Courtesy of* MetalForming, *a publication of PMA Services, Inc., for the Precision Metalforming Association, Independence, OH.)*

In *low-pressure tube hydroforming* (pressures up to 35 MPa or 5000 psi), the tube is first filled with fluid and then the dies are closed around the tube. The primary purpose of the fluid is to act as a liquid mandrel that prevents collapsing as the tube is bent to the contour of the die. While the cross-section shape can be changed, the shapes must be simple, corner radii must be large, and there must be minimal expansion of the tube diameter. In *high-pressure tube hydroforming*, an internal pressure between 100 and 700 MPa (15,000 and 100,000 psi) is used to expand the diameter of the tube, forming tight corner radii and significantly altered cross sections. *Pressure-sequence hydroforming* begins by applying low internal pressure as the die is closing. This supports the inside wall of the tube and allows it to conform to the cavity. When the die is fully closed, high pressure is then applied to complete the forming of the tube walls.

Attractive features of tube hydroforming include the ability to use lightweight, high-strength materials; the increase in strength that results from strain hardening; and the ability to utilize designs with varying thickness or varying cross section. Welded assemblies can often be replaced by one-piece components, and secondary operations can often be reduced. Disadvantages include the long cycle time (low production rate) and relatively high cost of tooling and process setup.

An emerging alternative to tube hydroforming is *hot-metal-gas forming.* In this process, a straight or preformed tube is heated to forming temperature by induction heating, and shaped using the application of pressurized inert gas rather than fluid. Parts can then be quenched directly from the high-temperature forming operation. Expectations for the process include faster speed, lower cost, and greater flexibility compared to tube hydroforming.

HOT-DRAWING OPERATIONS

Because sheet material has a large surface area and small thickness, it cools rapidly in a lower-temperature environment. For this reason, most sheet forming is performed at room or mildly elevated temperature. Cold drawing uses relatively thin metal, changes the thickness very little or not at all, and produces parts in a wide variety of shapes. In contrast, hot drawing is used for forming relatively thick-walled parts of simple geometries, and the material thickness may change significantly during the operation.

As shown in Figure 17-54, hot-drawing operations are extremely similar to previously discussed processes. The upper-left schematic shows a simple disk-to-cup drawing operation without a hold-down. While the increased thickness of the material acts to resist wrinkling, the height of the cup wall is still restricted by defect formation. When smaller diameter and higher wall height are desired, redraws, like that depicted in the upper-right schematic, can be used. The lower schematic of Figure 17-54 illustrates an alternative where the cup is pushed through a series of dies with a single punch.

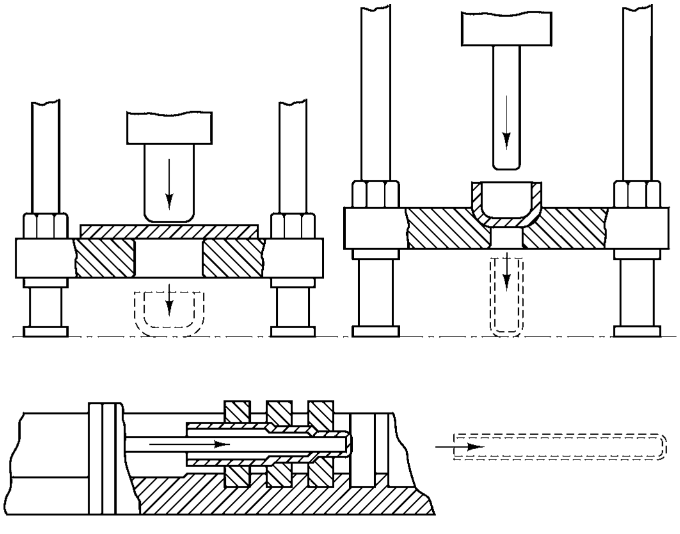

FIGURE 17-54 Methods of hot drawing a cup-shaped part. (Upper left) First draw. (Upper right) Redraw operation. (Lower) Multiple-die drawing. *(Courtesy of United States Steel Corp., Pittsburgh, PA.)*

If the drawn products are designed to utilize part of the original disk as a flange around the top of the cup, the punch does not push the material completely through the die but descends to a predetermined depth and then retracts. The partially drawn cup is then ejected upward, and the perimeter of the remaining flange is trimmed to the desired size and shape.

HIGH-ENERGY-RATE FORMING

A number of methods have been developed to form metals through the application of large amounts of energy in a very short time (high strain rate). These are known as *high-energy-rate forming* processes and often go by the abbreviation *HERF*. Many metals tend to deform more readily under the ultra-rapid load application rates used in these processes. As a consequence, HERF makes it possible to form large workpieces and difficult-to-form metals with less expensive equipment and cheaper tooling than would otherwise be required. HERF processes also produce less springback. This is probably associated with two factors: (1) the high compressive stresses that are created and (2) the elastic deformation of the die produced by the ultra-high pressure.

High-energy-release rates can be obtained by five distinct methods: (1) underwater explosions, (2) underwater spark discharge (electro-hydraulic techniques), (3) pneumatic-mechanical means, (4) internal combustion of gaseous mixtures, and (5) the use of rapidly formed magnetic fields (electromagnetic techniques). Specific processes were developed around each of these approaches and attracted considerable attention during the 1960s and 1970s when they were used to produce one-of-a-kind and small quantities of parts for the space program. They are currently playing a relatively insignificant role in manufacturing technology.

IRONING

Ironing is the name given to the process that thins the walls of a drawn cylinder by passing it between a punch and die where the gap is less than the incoming wall thickness. As shown in Figure 17-55, the walls reduce to a uniform thickness and lengthen, while the thickness of the base remains unchanged. The most common example of an ironed product is the thin-walled beverage can.

EMBOSSING

Embossing, shown in Figure 17-56, is a pressworking process in which raised lettering or other designs are impressed in sheet material. Basically, it is a very shallow drawing operation where the depth of the draw is limited to 1 to 3 times the thickness of the metal and the material thickness remains largely unchanged. A common example of an embossed product is the patterned or textured industrial stair tread.

SUPERPLASTIC SHEET FORMING

Conventional metals and alloys typically exhibit tensile elongations in the range of 10 to 30%. By producing sheet materials with ultra-fine grain size and performing the defor-

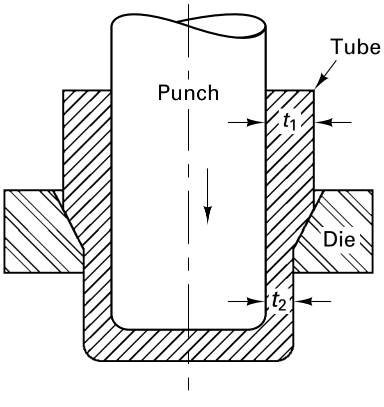

FIGURE 17-55 The ironing process.

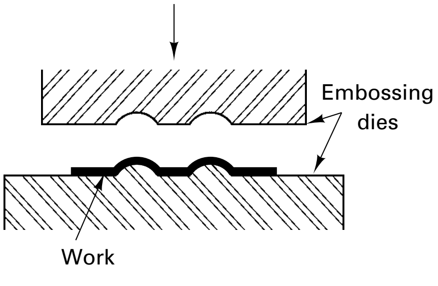

FIGURE 17-56 Embossing.

mation at low strain rates and elevated temperatures, elongations can exceed 100% and may be as high as 2000 to 3000%. This *superplastic* behavior can be used to form material into large, complex-shaped products with compound curves. Deep or complex shapes can be made as single-piece, single-operation pressings rather than multistep conventional pressings or multipiece assemblies.

At the elevated temperatures required to promote superplasticity (about 900°C for titanium, between 450° and 520°C for aluminum, or generally above half of the melting point of the material on an absolute scale), the strength of material is sufficiently low that many of the superplastic forming techniques are adaptations of processes used to form thermoplastics (discussed in Chapter 14). The tooling doesn't have to be exceptionally strong, so form blocks can often be used in place of die sets. In thermoforming, a vacuum or pneumatic pressure causes the sheet to conform to a heated male or female die. Blow forming, vacuum forming, deep drawing, and combined superplastic forming and diffusion bonding are other possibilities. Precision is excellent, and fine details or surface textures can be reproduced accurately. Springback and residual stresses are almost nonexistent, and the products have a fine, uniform grain size.

The major limitation to superplastic forming is the low forming rate that is required to maintain superplastic behavior. Cycle times may range from 2 minutes to as much as 2 hours per part, compared to the several seconds that is typical of conventional presswork. As a result, applications tend to be limited to low-volume products such as those common to the aerospace industry. By making the products larger and eliminating assembly operations, the weight of products can often be reduced, there are fewer fastener holes to initiate fatigue cracks, tooling and fabrication costs are reduced, and there is a shorter production lead time.

PROPERTIES OF SHEET MATERIAL

A wide variety of materials have been used in sheet-forming operations, including hot- and cold-rolled steel, stainless steel, copper alloys, magnesium alloys, aluminum alloys, and even some types of plastics. Sheet material can also be coated or painted, or even a clad or laminated composite.

The success or failure of many sheet-forming operations is strongly dependent on the properties of the starting material. Sheet metal has already undergone a number of processes, such as casting, hot rolling, and cold rolling, and has acquired distinct properties and characteristics. A simple uniaxial tensile test of the sheet material can be quite useful by providing values for the yield strength, tensile strength, elongation, and strain-hardening exponent. The amount of elongation prior to necking, or the uniform elongation, is probably a more useful elongation number, since localized thinning is actually a form of sheet metal failure. A low-yield, high-tensile, and high-uniform elongation all combine to indicate a large amount of useful plasticity. A high value of the strain-hardening exponent, n (obtained by fitting the true stress and true strain to the equation: stress $= K$ (strain)^n), indicates that the material will have greater allowable stretch and a more uniform stretch.

In the uniaxial tensile test, the sheet is stretched in one direction and is permitted to contract and compensate in both width and thickness. Many sheet-forming operations subject the material to stretching in more than one direction, however. When the material is in biaxial tension, as in deep drawing or the various stretch-forming operations, all of the elongation must be compensated by a decrease in thickness. The strain to fracture is typically about one-third of the value observed in a uniaxial test. As a result, some form of biaxial stretching test may be preferred to assess formability, such as a dome-height or hydraulic bulge test.

Sheet metal is often quite anisotropic—properties varying with direction or orientation. A useful assessment of this variation can be obtained through the plastic strain ratio, R. During a uniaxial tensile test, as the length increases, the width and thickness both reduce. The R-value is simply the ratio of the width strain to the thickness strain. Materials with values greater than 1 tend to compensate for stretching by flow within the sheet and resist the thinning that leads to fracture. Hence materials with high R-values have good formability. Sheet materials can also have directional variations within the plane of the sheet. These are best evaluated by performing four uniaxial tensile tests, one cut longitudinally (generally along the direction of prior rolling), one transverse (perpendicular to the first), and one along each of the 45° axes. Values are then computed for the average normal anisotropy (the sum of the four values of R divided by 4) and the planar anisotropy, ΔR (computed as $R_{\text{longitudinal}} + R_{\text{transverse}} - R_{45\text{ right}} - R_{45\text{ left}}$, all divided by 2). Since a ΔR of zero means that the material is uniform in all directions within the plane of the sheet, an ideal drawing material would have a high value of R and a low value of ΔR. Unfortunately, the two values tend to be coupled, such that high formability is often accompanied by directional variations within the plane of the sheet. Due to these variations, disks being drawn into cylindrical cups will have variations in the final wall height.

Sheet-forming properties have also been shown to change significantly with variations in both temperature and speed of deformation, or strain rate. Low-carbon steels generally become stronger when deformed at higher speeds, while many aluminum alloys weaken and become more prone to failure during the operation.

DESIGN AIDS FOR SHEET METAL FORMING

The majority of sheet metal failures occur due to thinning or fracture, and both are the result of excessive deformation in a given region. A quick and economical means of evaluating the severity of deformation in a formed part is to use *strain analysis* and a *forming limit diagram*. A pattern or grid, such as the one in Figure 17-57, is placed on the surface of a sheet by scribing, printing, or etching. The circles generally have diameters between 2.5 and 5 mm (0.1 to 0.2 in.) to enable detection of point-to-point variations in strain distribution. During deformation, the circles convert into ellipses, and the distorted pattern can be measured and evaluated. Regions where the enclosed area has expanded are locations of sheet thinning and possible failure. Regions where the area has contracted have undergone sheet thickening and may be sites of possible buckling or wrinkles.

Using the ellipses on the deformed grid, the major strains (strain in the direction of the largest radius or diameter) and the associated minor strains (strain 90° from the major) can be determined for a variety of locations. These values can then be plotted on a forming limit diagram such as the one shown in Figure 17-57. If both major and minor strains are positive (right-hand side of the diagram), the deformation is known as *stretching*, and the sheet metal will definitely decrease in thickness. If the minor strain is negative, this contraction may partially or wholly compensate any positive stretching in the major direction. The combination of tension and compression is known as *drawing*, and the thickness may decrease, increase, or stay the same, depending on the relative magnitudes of the two strains. Regions where both strains are negative do not appear on the diagram, since its purpose is to reveal locations of possible fractures, and fractures only occur in a tensile environment.

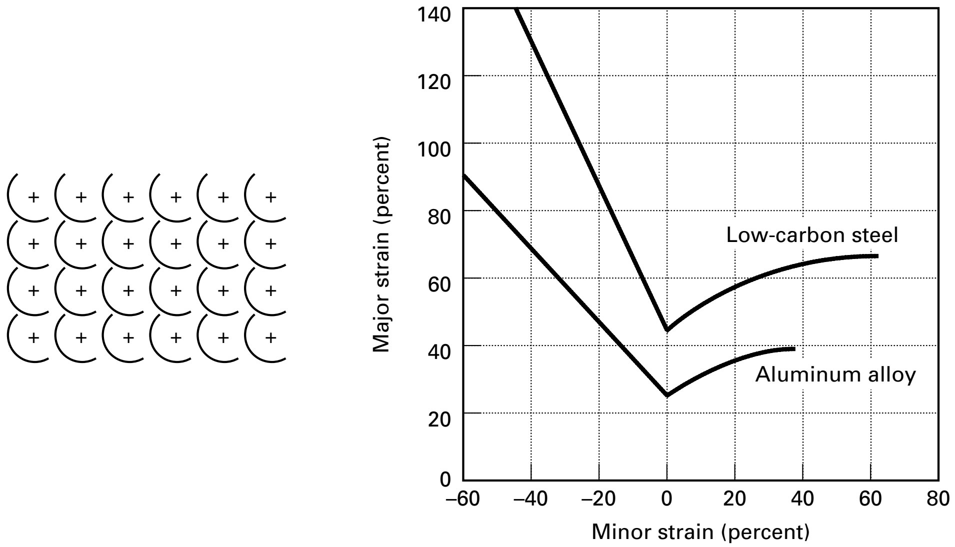

FIGURE 17-57 (Left) Typical pattern for sheet metal deformation analysis; (right) forming limit diagram used to determine whether a metal can be shaped without risk of fracture. Fracture is expected when strains fall above the lines.

Those strains that fall above the forming limit line indicate regions of probable fracture. Possible corrective actions include modification of the lubricant, change in the die design, or variation in the clamping or hold-down pressure. Strain analysis can also be used to determine the best orientation of blanks relative to the rolling direction, assist in the design of dies for complex-shaped products, or compare the effectiveness of various lubricants. Because of the large surface-to-volume ratio in sheet material, lubrication can play a key role in process success or failure.

17.5 ALTERNATIVE METHODS OF PRODUCING SHEET-TYPE PRODUCTS

ELECTROFORMING

Several manufacturing processes have been developed to produce sheet-type products by directly depositing metal onto preshaped forms or mandrels. In a process known as *electroforming*, the metal is deposited by plating. Nickel, iron, copper, or silver can be deposited in thicknesses up to 16 mm ($\frac{5}{8}$ in.). When the desired thickness has been attained, plating is stopped and the product is stripped from the mandrel.

A wide variety of sizes and shapes can be made by electroforming, and the fabrication of a product requires only a single pattern or mandrel. Low production quantities can be made in an economical fashion, with the principal limitation being the need to strip the product from the mandrel. Replication of the contact surface and profile are extremely good, but the uniformity of thickness and external profile may present problems. For applications like the production of multiple molds from a single master pattern, the interior surface is the critical one, and the wall thickness serves only to provide the necessary strength. Exterior irregularities are not critical, and various types of backup material can be employed to provide additional support. For applications where the exterior dimensions are also important, uniform deposition is required.

SPRAY FORMING

Similar parts can also be formed by *spray deposition*. One approach is to inject powdered material into a plasma torch (a stream of hot ionized gas with temperatures up to 11,000°C or 20,000°F). The particles melt and are propelled onto a shaped form or mandrel. Upon impact, the droplets flatten and undergo rapid solidification to produce a dense, fine-grained product. Multiple layers can be deposited to build up a desired size, shape, and thickness. Because of the high adhesion, the mandrel or form is often removed by machining or chemical etching. Most applications of plasma spray forming involve the fabrication of specialized products from difficult-to-form or ultra-high-melting-point materials.

The *Osprey process*, described in Chapter 18 (Section 18-10), can also be adapted to produce thin, spray-formed products. Here, molten metal flows through a nozzle, where it is atomized and carried by high-velocity nitrogen jets. The semisolid particles are propelled toward a target, where they impact and complete their solidification. Tubes, plates, and simple forms can be produced from a variety of materials. Layered structures can also be produced by sequenced deposition.

17.6 PIPE WELDING

Large quantities of steel pipe are made by two processes that use the hot forming of steel strip coupled with deformation welding of the free edges. Both of these processes, *butt welding* of pipe and *lap welding* of pipe, utilize steel in the form of *skelp*—long strips with specified width, thickness, and edge configuration. Because the skelp was produced by hot rolling and the welding process produces further deformation and recrystallization, pipe welded by these processes tends to be very uniform in structure and properties.

BUTT-WELDED PIPE

In the manufacture of butt-welded pipe, steel skelp is heated to a specified hot-working temperature by passing it through a tunnel-type furnace. Upon exiting the furnace, the skelp is pulled through forming rolls that shape it into a cylinder and bring the free ends into contact. The pressure exerted between the opposite edges of the skelp is sufficient to upset the metal and produce a welded seam. Additional sets of rollers then size and shape the pipe, and it is cut to standard, preset lengths. Product diameters range from 3 mm ($\frac{1}{8}$ in.) to 75 mm (3 in.), and speeds can approach 150 m/min (500 ft/min).

LAP-WELDED PIPE

The lap-welding process for making pipe differs from the butt-welding technique in that the skelp now has beveled edges and the rolls form the weld by forcing the lapped edges down against a supporting mandrel. This process is used primarily for larger sizes of pipe, with diameters from about 50 mm (2 in.) to 400 mm (14 in.). Because the product is driven over an internal mandrel, product length is limited to about 6 to 7 m (20 to 25 ft).

■ 17.7 PRESSES

CLASSIFICATION OF PRESSES

The primary tool for performing most of the sheet-forming operations discussed in this chapter, and many of the bulk forming operations presented in Chapter 16, is some form of press, and successful manufacture often depends on using the right kind of equipment. When selecting a press for a given application, consideration should be given to the capacity required, the type of power (manual, mechanical, or hydraulic), the number of slides or drives, the type of drive, the stroke length for each drive, the type of frame or construction, and the speed of operation. Table 17-2 lists some of the major types of presses and groups them by the type of drive.

Manually operated presses such as foot-operated or *kick presses* are generally used for very light work such as shearing small sheets and thin material.

Moving toward larger equipment, we find that *mechanical drives* tend to provide fast motion and positive control of displacement. Once built, however, the flexibility of a mechanical press is limited, since the length of the stroke is set by the design of the drive. The available force usually varies with position, so mechanical presses are preferred for operations that require the maximum pressure near the bottom of the stroke, such as cutting, shallow forming, drawing (up to about 10 cm), and progressive and transfer die operations. Typical capacities range up to about 9000 metric tons.

Figure 17-58 depicts some of the basic types of mechanical press drive mechanisms. *Crank-driven* presses are the most common type because of their simplicity. They are used for most piercing and blanking operations and for simple drawing. Double-crank presses offer a means of actuating blankholders or operating multiple-action dies. *Eccentric or cam drives* are used where the ram stroke is rather short. Cam action can also provide a dwell at the bottom of the stroke and is often the preferred method of actuating the blankholder in deep-drawing processes. *Knuckle-joint drives* provide a very high mechanical advantage along with fast action. They are often preferred for coining, sizing, and Guerin forming. *Toggle mechanisms* are used principally in drawing presses to actuate the blankholder, and *screw-type drives* offer great mechanical advantage coupled with an action that resembles a drop hammer (but slower and with less impact). For this reason, screw presses have become quite popular in the forging industry.

In contrast to the mechanical presses, *hydraulic presses* produce motion as the result of piston movement, and longer or variable-length strokes can be programmed within the limitations of the cylinder (which may be as long as 250 cm or 100 in.). Forces and

TABLE 17-2 Classification of the Drive Mechanisms of Commercial Presses

Manual	Mechanical	Hydraulic
Kick presses	Crank	Single slide
	Single	Multiple slide
	Double	
	Eccentric	
	Cam	
	Knuckle joint	
	Toggle	
	Screw	
	Rack and pinion	

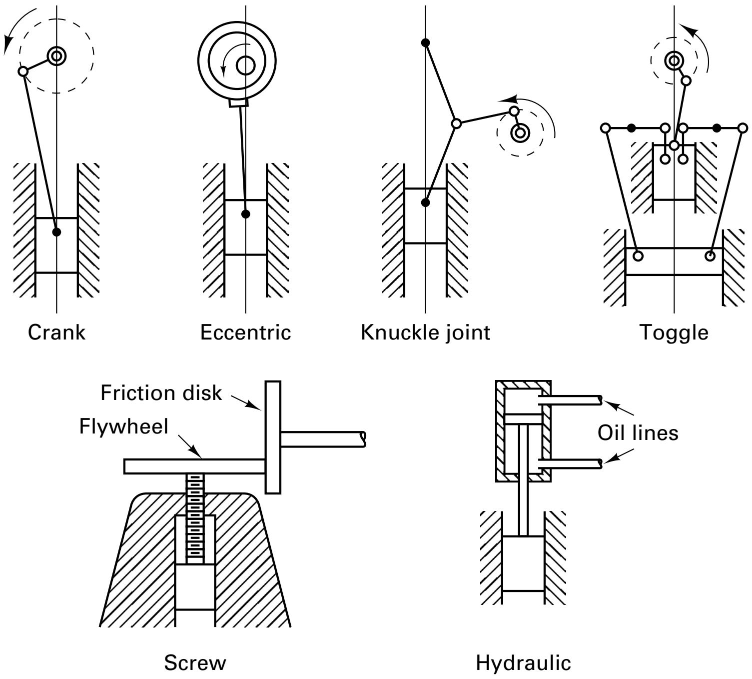

FIGURE 17-58 Schematic representation of the various types of press drive mechanisms.

pressures are more accurately controlled, and full pressure is available throughout the entire stroke. Speeds can be programmed to vary or remain constant during an operation. Since position is varied through fluid displacement, the reproducibility of position will have greater variation than a mechanical press. Hydraulic presses are available in capacities exceeding 50,000 metric tons and are preferred for operations requiring a steady pressure throughout a substantial stroke (such as deep drawing), operations requiring wide variation in stroke length, and operations requiring high or widely variable forces. In general, hydraulic presses tend to be slower than the mechanical variety, but some are available that can provide up to 600 strokes per minute in a high-speed blanking operation. By using multiple hydraulic cylinders, programmed loads can be applied to the main ram, while a separate force and timing are used on the blank holder.

TYPES OF PRESS FRAME

As shown in Table 17-3, presses should also be selected with consideration for the type of frame. Frame design often imposes limitations on the size and type of work that can be accommodated, how that work is fed and unloaded, the overall stiffness of the machine, and the time required to change dies.

Presses that have their frames in the shape of an arch (arch-frame presses) are seldom used today, except with screw drives for coining operations. *Gap-frame presses*, where the frames have the shape of the letter *C*, are among the most versatile and commonly preferred presses. They provide unobstructed access to the dies from three directions and permit large workpieces to be fed into the press. Gap-frame presses are available in a wide range of sizes, from small bench types of about 1 metric ton up to 300 metric tons or more.

TABLE 17-3 Classification of Presses According to Type of Frame

Arch	Gap	Straight Sided
Crank or eccentric Percussion	Foot Bench Vertical Inclinable Inclinable Open back Horn Turret	Many variations, but all with straight-sided frames

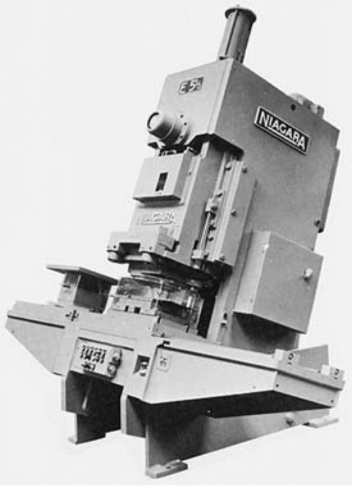

FIGURE 17-59 Inclinable gap-frame press with sliding bolster to accommodate two die sets for rapid change of tooling. *(Courtesy of Niagara Machine & Tool Works, Buffalo, NY.)*

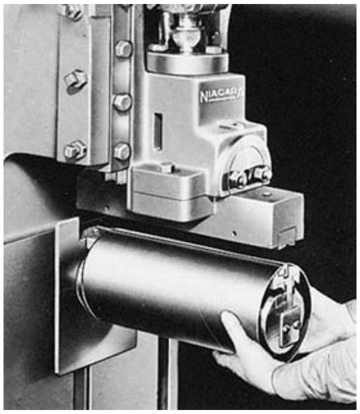

FIGURE 17-60 Making a seam on a horn press. Note the protruding "horn" that replaces the lower press bed. *(Courtesy of Niagara Machine & Tool Works, Buffalo, NY.)*

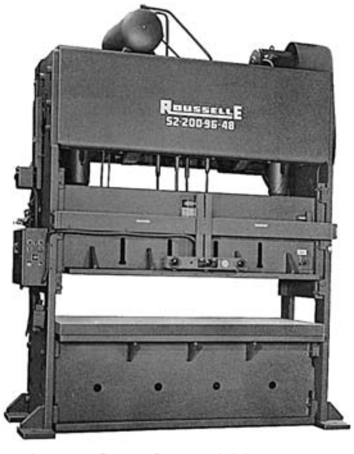

FIGURE 17-61 A 200-ton (1800-kN) straight-sided press. *(Courtesy of Rousselle Corporation, West Chicago, IL.)*

Popular design features include open back, inclinability, adjustable bed, and sliding bolster. *Open-back presses* allow for the ejection of products or scrap through an opening in the back of the press frame. *Inclinable presses* can be tilted, so that ejection can be assisted by gravity or compressed air jets. As a result of these features, open-back inclinable (OBI) presses are the most common form of gap-frame press. The addition of an *adjustable bed* allows the base of the machine to raise or lower to accommodate different workpieces. A *sliding bolster* permits a second die to be set up on the press while another is in operation. Die changeover then requires only a few minutes to unclamp the punch segment of the active die, move the second die set into position, clamp the new punch to the press ram, and resume operation. Figure 17-59 shows an open-back inclinable gap-frame press with a sliding bolster.

A *horn press* is a special type of gap-frame press where a heavy cylindrical shaft, or "horn," appears in place of the usual bed. Curved or cylindrical workpieces can be placed over the horn for such operations as seaming, punching, and riveting, as illustrated in Figure 17-60. On some presses, both a horn and a bed are provided, with provision for swinging the horn aside when not needed.

Turret presses are especially useful in the production of sheet metal parts with numerous holes or slots that vary in size and shape. They usually employ a modified gap-frame structure and add upper and lower turrets that carry a number of punches and dies. The two turrets are geared together so that any desired tool set can be quickly rotated into position.

Straight-sided presses have frames that consist of a crown, two uprights, a base or bed, and one or more moving slides. Accessibility is generally from the front and rear, but openings are often provided in the side uprights to permit feeding and unloading of workpieces. Straight-sided presses are available in a wide variety of sizes and designs and are the preferred design for most hydraulic, large-capacity, or specialized mechanical-drive presses. As an added benefit, elastic deflections tend to be uniform across the working surface, as opposed to the angular deflections that are typical of the gap-frame design. Figure 17-61 shows a typical straight-sided press.

SPECIAL TYPES OF PRESSES

Presses have also been designed to perform specific types of operations. *Transfer presses* have a long moving slide that enables multiple operations to be performed simultaneously in a single machine. Multiple die sets are mounted side by side along the slide. After the completion of each stroke, a continuous strip is advanced or individual workpieces are transferred to the next station by a mechanism like the one shown in Figure 17-62. Transfer presses can be used to perform blanking, piercing, forming, trimming, drawing, flanging, embossing, and coining. Figure 17-63 illustrates the production of a part that incorporates a variety of these operations.

By using a single machine to perform multiple operations, transfer presses offer high production rates, high flexibility, and reduced costs (attributed to the reduced labor, floor space, energy, and maintenance). Since production is usually between 500 and 1500 parts per hour, these machines are usually restricted to operations where 4000 or more identical parts are required daily, each involving three or more separate operations. A total production run of 30,000 or more identical parts is generally desired between major changes in tooling. As a result, transfer presses are used primarily in industries such as automotive and appliances, where large numbers of identical products are being produced.

Four-slide or *multislide* machines like the one shown in Figure 17-64 are extremely versatile presses that are designed to produce small, intricately shaped parts from continuously fed wire or coil strip. The basic machine has four power-driven slides (or motions) set 90° apart. The attached tooling is controlled by cams and designed to operate in a progressive cycle. In the sheet metal variation, strip stock is fed into the machine, where it is straightened and progressively pierced, notched, bent, and cut off at the various slide stations. Figure 17-65 presents the operating mechanism of one such machine. As the material moves from right to left, it undergoes a straightening, two

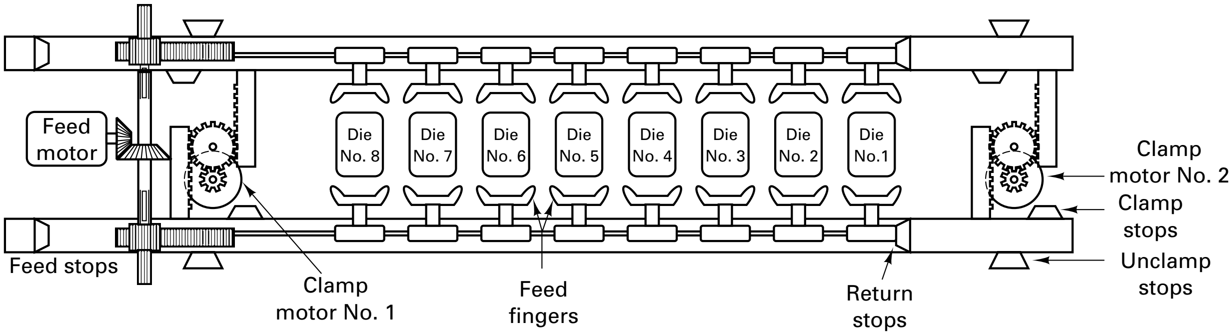

FIGURE 17-62 Schematic showing the arrangement of dies and the transfer mechanism used in transfer presses. *(Courtesy of Verson Allsteel Press Company, Chicago, IL.)*

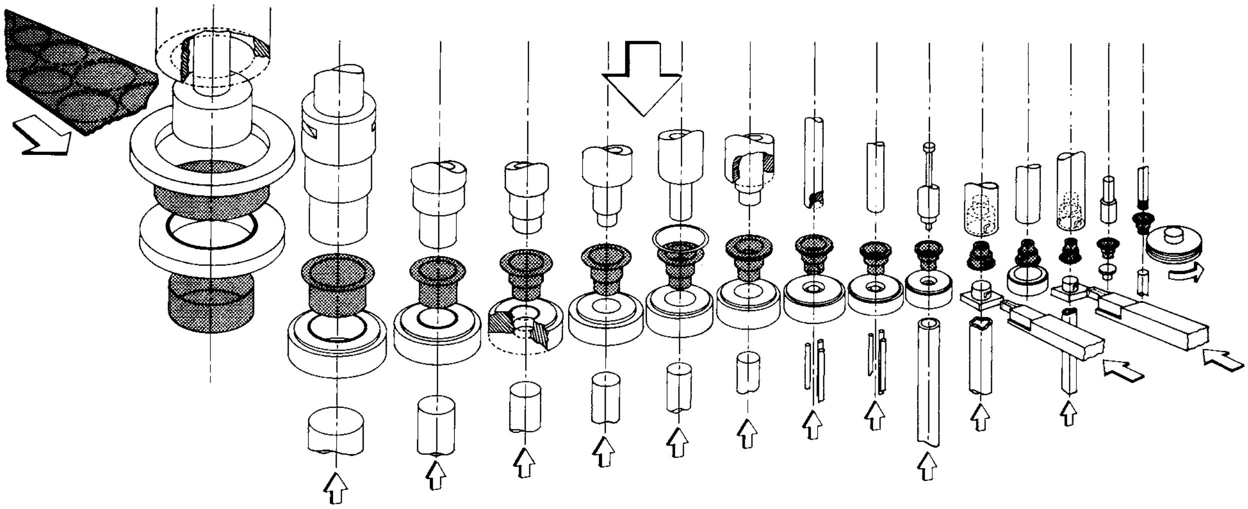

FIGURE 17-63 Various operations can be performed during the production of stamped and drawn parts on a transfer press. *(Courtesy of U.S. Baird Corporation, Stratford, CT.)*

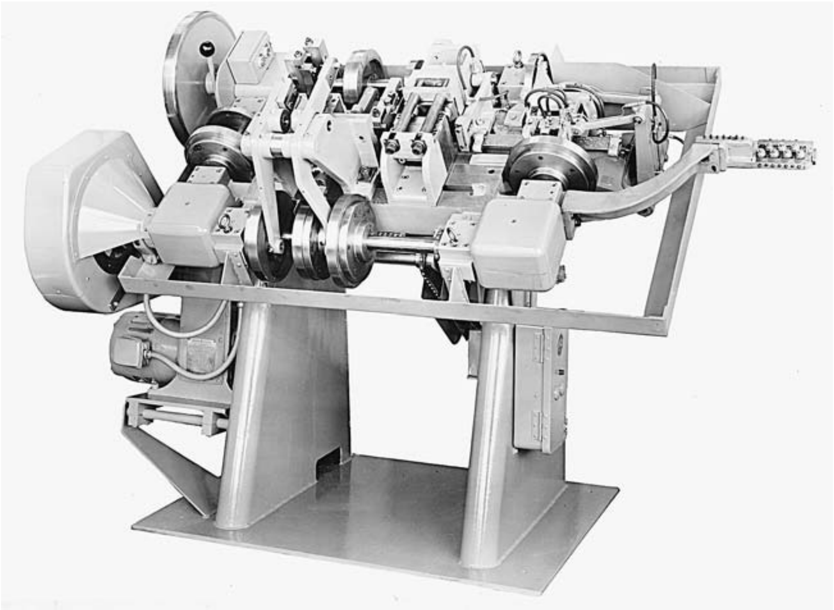

FIGURE 17-64 Multislide machine with guards and covers removed. *(Courtesy of U.S. Baird Corporation, Stratford, CT.)*

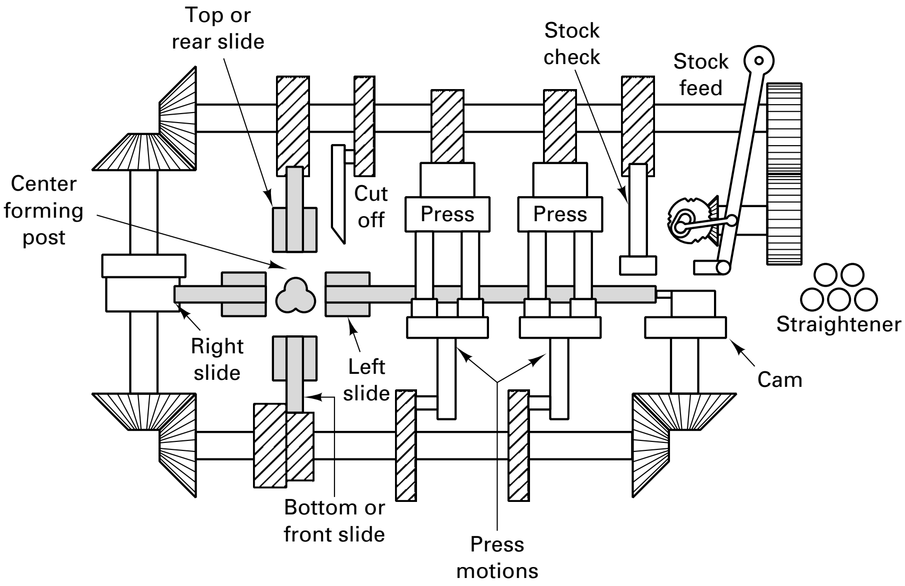

FIGURE 17-65 Schematic of the operating mechanism of a multislide machine. The material enters on the right and progresses toward the left as operations are performed. *(Courtesy of U.S. Baird Corporation, Stratford, CT.)*

FIGURE 17-66 Example of the piercing, blanking, and forming operations performed on a multislide machine. *(Courtesy of U.S. Baird Corporation, Stratford, CT.)*

successive pressing operations, various operations from all four directions, and a final cutoff. Figure 17-66 shows the carrier strip and the successive operations as flat strip is pierced, blanked, and formed into a folded sheet metal product. The strip stock may be up to 7.5 mm (3 in.) wide and 2.5 mm ($\frac{1}{32}$ in.) thick. Wires up to about 3 mm ($\frac{1}{8}$ in.) in diameter are also commonly processed. Products such as hinges, links, clips, and razor blades can be formed at very high rates on these machines. Setup times are long, so large production runs are preferred.

PRESS-FEEDING DEVICES

Although hand feeding may still be used in some press operations, operator safety and the desire to increase productivity have motivated a strong shift to feeding by some form of mechanical device. When continuous strip is used, it can be fed automatically by double-roll feeds mounted on the side of the press. Discrete products can be moved and positioned in a wide variety of ways. Dial-feed mechanisms enable an operator to insert workpieces into the front holes of a rotating dial, which then indexes with each stroke of the press to move the parts progressively into proper position between the punch and die. Lightweight parts can be fed by suction-cup mechanisms, vibratory-bed feeders, and similar devices. Robots are frequently used to place parts into presses and remove them after forming. See Chapter 36 for an expanded discussion of manufacturing automation.

Key Words

air-bend die
backward extrusion
bar folder
bending
blankholder force
blanking
bottoming die
bulging
burnishing
cold forging
cold forming
compound die
compression bending
cutoff
deep drawing
dinking
draw bead
draw bending
draw ratio
drawing
electroforming
embossing
explosive forming
explosive rivet
fineblanking
flanging
flow turning
forming
forming limit diagram
forward extrusion
Guerin process
high-energy-rate forming
hold-down force
hydraulic press
independent die set
ironing
kick press
lancing
mechanical press
minimum bend radius
modular tooling
multislide press
neutral axis
nibbling
normal anisotropy
notching
Osprey process
parallel-plate hydroforming
peening
perforating
piercing
pillow forming
pipe welding
planar anisotropy, ΔR
plastic strain ratio, R
pop-rivet
press bending
press brake
progressive die
punch
rake angle
redrawing
roll bending
roll forming
roll straightening
roller burnishing
rubber tooling
seaming
shallow drawing
shaving
shear
shear forming
shearing
sheet
sheet hydroforming
skelp
slitting
spinning
spray forming
springback
squaring shears
steel-rule die
strain analysis
strain-hardening exponent, n
stretch forming
stretcher leveling
stretching
strip
stripper plate
subpress die
superplastic forming
swaging
thread rolling
transfer die
transfer press
trimming
tube bending
tube hydroforming
turret-type punch press

Review Questions

1. What distinguishes sheet forming from bulk forming?
2. What is a definition of shearing?
3. Why are sheared or blanked edges generally not smooth?
4. What measures can be employed to improve the quality of a sheared edge?
5. Why are fineblanking presses more complex than those used in conventional blanking?
6. Why might a long shearing cut be made in a progressive fashion?
7. What is a slitting operation?
8. What are the differences between piercing and blanking?
9. What are some types of blanking or piercing operations that have come to acquire specific names?
10. What is the purpose of having a shear angle on a punch?
11. Why is it important that a blanking punch and die be in proper alignment?
12. What is the major benefit of mounting punches and dies on independent die sets?
13. What is the major benefit of assembling a complex die set from standard subpress dies?
14. What is the benefit of making dies as a multipiece assembly?
15. What is a steel-rule die, and what types of materials can it cut?
16. What is a progressive die set?
17. What is the difference between progressive dies and transfer dies?
18. How do compound dies differ from progressive dies?
19. What is the attractive feature of a turret-type punch press?
20. When making bends in sheet metal, what is the distinction between bending, forming, and drawing?
21. What are the stress states on the exterior surface and interior surface of a bend?
22. Why does a metal usually become thinner in the region of a bend?
23. What is springback, and why is it a concern during bending?
24. What types of operations can be performed on a press brake?
25. What factors determine the minimum bend radius for a material?
26. If a right-angle bend is to be made in a cold-rolled sheet, should it be made with the bend lying along or perpendicular to the direction of previous rolling?
27. From a manufacturing viewpoint, why is it desirable for all bends in a product (or component) to have the same radius?
28. What is the difference between air-bend and bottoming dies? Which is more flexible? Which produces more reproducible bends?
29. What is the primary benefit of incorporating a coining action in bottom bending? The primary negative feature?
30. What type of products are produced by roll bending?
31. What is the role of the form block in draw bending and compression bending?
32. How can we prevent flattening or wrinkling when bending a tube?
33. What type of product geometry can be produced by cold-roll forming? Is the process appropriate for making short lengths of specialized products?
34. What are some methods for straightening or flattening rod or sheet?
35. What two distinctly different metalforming processes use the term *drawing*?
36. Why is the tooling cost for a spinning operation relatively low?

37. How is shear forming different from spinning?
38. For what types of products would stretch forming be an appropriate manufacturing technique?
39. What is the distinction between shallow drawing and deep drawing?
40. What is the function of the pressure ring or hold-down in a deep-drawing operation?
41. Explain why thin material may be difficult to draw into a defect-free cup.
42. How can redraw operations be used to produce a taller, smaller diameter cup than can be produced in a single deep-drawing operation?
43. What are draw beads, and what function do they perform?
44. Why is a trimming operation often included in a deep-drawing manufacturing sequence?
45. How does the Guerin process reduce the cost of tooling in a drawing operation?
46. How can fluid pressure or rubber tooling be used to perform bulging?
47. What is sheet hydroforming?
48. What explanation can be given for the greater formability observed during sheet hydroforming? How is this feature being used in the automotive industry?
49. What is the purpose of the inward movement of the end plugs during tube hydroforming?
50. What is the difference between low-pressure tube hydroforming and high-pressure tube hydroforming in terms of both pressures and the nature of the deformations produced?
51. What are some of the basic methods that have been used to achieve the high-energy-release rates needed in the HERF processes?
52. Why is springback rather minimal in high-energy-rate forming?
53. What are some well-known products that have been produced by processes including ironing? By embossing?
54. What material and process conditions are associated with superplastic forming?
55. What is the major limitation of the superplastic forming of sheet metal? What are some of the more attractive features?
56. What properties from a uniaxial tensile test can be used to assess sheet metal formability?
57. How is the formability in biaxial tension different from that in uniaxial tension?
58. What techniques can be used to assess "normal anisotropy" and "planar anisotropy" in sheet material?
59. How can strain analysis be used to determine locations of possible defects or failure in sheet metal components?
60. What is a forming limit diagram?
61. Explain the key difference between the right- and left-hand sections of a forming limit diagram. These sections correspond to stretching and drawing.
62. Describe two alternative methods of producing complex-shaped thin products without requiring sheet metal deformation techniques.
63. What two hot-forming operations can be used to produce pipe from steel strip?
64. What are the primary assets and limitations of mechanical press drives? Of hydraulic drives?
65. What are some of the common types of press frames?
66. What is the purpose of inclining or tilting a press?
67. Describe how multiple operations are performed simultaneously in a transfer press.
68. What types of products are produced on a four-slide or multislide machine?

Problems

1. The maximum punch force in blanking can be estimated by the equation:

$$\text{force} = S\,t\,L$$

where:

S = the material shear strength
t = the sheet thickness
L = the total length of sheared edge (circumference or perimeter)

a. How would this number change if the rake angle is equal to a $1t$ change across the width or diameter of the part being sheared?
b. How would this number change if the rake were increased to a $3t$ change across the width or diameter?

2. Consider the various means of producing tubular products, such as extrusion, seam welding, butt welding during forming, piercing, and the various drawing operations. Describe the advantages, limitations, and typical applications of each.
3. Tube and sheet hydroforming have been undergoing rapid growth. Investigate current uses for these processes in automotive and other fields.
4. What are some of the techniques for minimizing the amount of springback in sheet-forming operations?
5. Select a forming process from either Chapter 16 or 17, and investigate the residual stresses that typically accompany or result from that process. If they are considered to be detrimental, how could these residual stresses be reduced or removed without damaging or deteriorating the product?

www.wiley.com/college/degarmo

Chapter 17 CASE STUDY

Fabrication of a One-Piece Brass Flashlight Case

The figure presents the sheet-metal-forming sequence to produce a one-piece flashlight case from CDA alloy 268, also known as yellow brass (66% copper, 34% zinc). As shown, the process involves a blanking operation, followed by three deep draws (the third of which is only a partial), and then several operations to shape the upper segment of the flashlight. The interior surface will be left as-fabricated, and the brass side walls of the case become part of the completed electrical circuit during operation. A decorative chrome plating is subsequently applied to the exterior.

The Copper Development Association's *Standards Handbook* cites a number of electrical applications for this alloy and particularly cites flashlight shells, so it would appear that a good material choice has been made. Among the cited "common fabrication processes" are blanking, drawing, forming and bending, spinning, and stamping. It would appear that the material is indeed compatible with the proposed processing activities. The "capacity for being cold worked" is rated as excellent, as is suitability for soldering and brazing.

In the annealed condition, the yield strength varies from 14 to 22 ksi, depending on grain size, while the companion tensile strength is 46 to 53 ksi and percent elongation ranges from 54 to 65%. Cold working brings about the following property changes:

Condition	Yield Strength(ksi)	Tensile Strength (ksi)	% Elongation
Quarter hard	40.0	54.0	43
Half hard	50.0	61.0	23
Full hard	60.0	74.0	8
Extra hard	62.0	85.0	5


Source: Ray-O-Vac Co., Division of Electric Storage Battery Co., Madison, Wisc

The sheet metal fabrication sequence for a one-piece brass flashlight case.

1. What properties make this an appropriate material for this application?
2. What features would you want to specify when purchasing your starting material? Consider temper, grain size, surface condition, edge condition, and so on.
3. Discuss any significant features or concerns with regard to the blanking, first deep draw, redraw, and second partial redraw operations.
4. It is likely that some form of intermediate (and possibly final) anneal will be required. Prescribe a suitable procedure for this material, including the necessary details of time, temperature, cooling conditions, and so on. Would some form of protective atmosphere be required? If so, what would you recommend?
5. Since this material is capable of significant cold-work strengthening, would it be advantageous to market your flashlight in its cold-worked condition? What would be the advantages and disadvantages of this option? If you feel it is advantageous, what would be your desired final condition?
6. Yellow brass is quite susceptible to stress–corrosion cracking. What could you do to minimize this mode of failure?
7. Several alternative materials have been proposed for this application. Provide a brief evaluation of each, considering both fabrication and use.
    a. 5000 series aluminum sheet (the material often used in car bodies)—does not respond to age hardening
    b. 6061 aluminum sheet (the material used in canoe skins)—can be age hardened
    c. 1008 steel sheet that has been copper plated on both sides (inside for electrical conductivity and outside as a base for chrome plate)

CHAPTER 18

POWDER METALLURGY

18.1 INTRODUCTION

Powder metallurgy is the name given to the process by which fine powdered materials are blended, pressed into a desired shape (compacted), and then heated (sintered) in a controlled atmosphere to bond the contacting surfaces of the particles and establish desired properties. The process, commonly designated as P/M, readily lends itself to the mass production of small, intricate parts of high precision, often eliminating the need for additional machining or finishing. There is little material waste, unusual materials or mixtures can be utilized, and controlled degrees of porosity or permeability can be produced. Major areas of application tend to be those for which the P/M process has strong economical advantage or where the desired properties and characteristics would be difficult to obtain by any other method. Because of its level of manufacturing maturity, powder metallurgy should actually be considered as a possible means of manufacture for any part where the geometry and production quantity are appropriate.

While a crude form of iron powder metallurgy existed in Egypt as early as 3000 B.C., and the ancient Incas made jewelry and other artifacts from precious metal powders, mass manufacturing of P/M products did not begin until the mid- or late-nineteenth century. At this time, powder metallurgy was used to produce copper coins and medallions, platinum ingots, lead printing type, and tungsten wires, the primary material for light bulb filaments. By the 1920s the tips of tungsten carbide cutting tools and nonferrous bushings were being produced. Self-lubricating bearings and metallic filters were other early products.

A period of rapid technological development occurred after World War II, based primarily on automotive applications, and iron and steel replaced copper as the dominant P/M material. Aerospace and nuclear developments created accelerated demand for refractory and reactive metals, materials for which powder processing is quite attractive. Full-density products emerged in the 1960s, and high-performance superalloy components, such as aircraft turbine engine parts, were a highlight of the 1970s. Developments in the 1980s and 1990s included the commercialization of rapidly solidified and amorphous powders as well as P/M injection molding technology.

Recent years have been ones of rapid growth for the P/M industry. From 1960 to 1980, the consumption of iron powder increased 10-fold. A similar increase occurred between 1980 and 1990, and the exponential growth continued through the 1990s. While most products are still under 50 mm (2 in.) in size, some have been produced with weights up to 45 kg (100 lb) with linear dimensions up to 500 mm (20 in.).

Automotive applications now account for nearly 70% of the powder metallurgy market. In 1990, the average U.S. automobile contained about 10 kg (21 lb) of P/M parts. By 1995, the amount had increased to over 13.6 kg (30 lb)—then to 16.3 kg (36 lb) by 2000 and to 19.5 kg (nearly 45 lb) by 2005. Some Ford, Chrysler, and General Motors V-8 engines contain between 27 and 33 pounds of P/M parts. A Chrysler V-6 engine contains 88 P/M parts with a total weight of 27 pounds. A high percentage of connecting rods are now produced by powder metallurgy. Automatic transmissions often contain between 15 and 25 pounds of P/M components.

Other areas where powder metallurgy products are used extensively include household appliances, recreational equipment, hand and power tools, hardware items, office equipment, industrial motors, and hydraulics. Areas of rapid growth include aerospace applications, advanced composites, electronic components, magnetic materials, metalworking tools, and a variety of biomedical and dental applications. Iron and low-alloy steels now account for 85% of all P/M usage, with copper and copper-based powders comprising about 7%. Stainless steel, high-strength and high-alloy steels, and aluminum and aluminum alloys are other high-volume materials. Titanium, magnesium, refractory metals, particulate composites, and intermetallics are seeing increased use.

18.2 THE BASIC PROCESS

The powder metallurgy process generally consists of four basic steps: (1) powder manufacture, (2) mixing or blending, (3) compacting, and (4) sintering. Compaction is generally performed at room temperature, and the elevated-temperature process of sintering is usually conducted at atmospheric pressure. Optional secondary processing often follows to obtain special properties or enhanced precision. Figure 18-1 presents a simplified flow chart of the conventional die-compaction P/M process.

18.3 POWDER MANUFACTURE

The properties of powder metallurgy products are highly dependent on the characteristics of the starting powders. Some important properties and characteristics include *chemistry and purity, particle size, size distribution, particle shape*, and the *surface texture* of the particles. Several processes can be used to produce powdered material, with each imparting distinct properties and characteristics to the powder and hence to the final product.

Over 80% of all commercial powder is produced by some form of melt *atomization*, where liquid material is fragmented into small droplets that cool and solidify into particles. Various methods have been used to form the droplets, several of which are

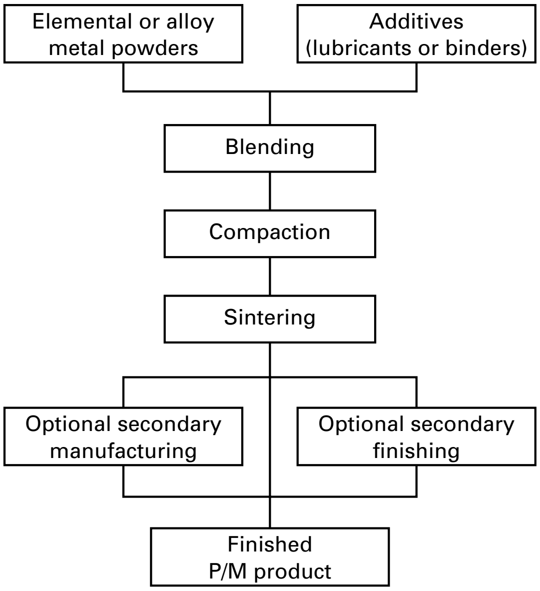

FIGURE 18-1 Simplified flow chart of the basic powder metallurgy process.

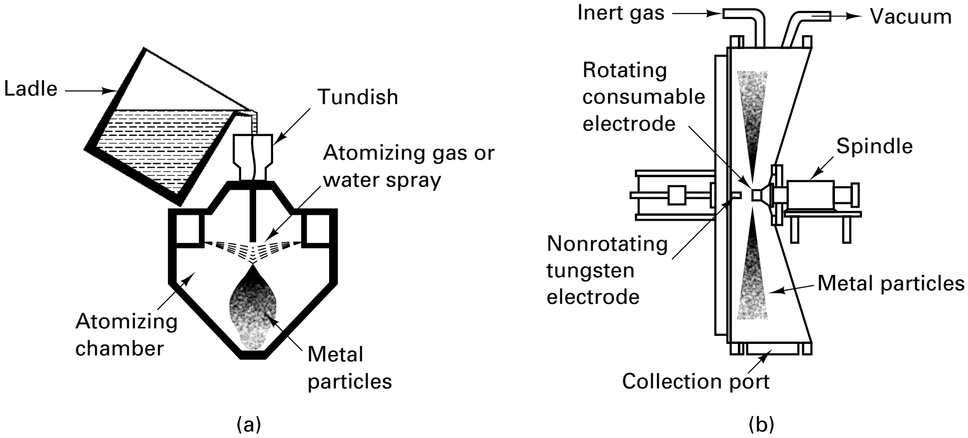

FIGURE 18-2 Two methods for producing metal powders: (a) melt atomization and (b) atomization from a rotating consumable electrode.

illustrated in Figure 18-2. Part (a) illustrates *gas atomization*, where jets of high-pressure gas (usually nitrogen, argon, or helium) strike a stream of liquid metal as it emerges from an orifice. Pressurized liquid (usually water) can replace the pressurized gas, converting the process to *liquid atomization* or *water atomization*. In part (b), an electric arc impinges on a rapidly rotating electrode. Centrifugal force causes the molten droplets to fly from the surface of the electrode and freeze in flight. Particle size is very uniform and can be varied by changing the speed of rotation.

Regardless of the specific process, atomization is an extremely useful means of producing *prealloyed powders*. By starting with an alloyed melt or prealloyed electrode, each powder particle has the desired alloy composition. Powders of aluminum alloys, copper alloys, stainless steel, nickel-based alloys (such as Monel), titanium alloys, cobalt-based alloys, and various low-alloy steels have all been commercially produced. The size, shape, and surface texture of the powder particles vary, depending on such process features as the velocity and media of the atomizing jets or the speed of electrode rotation, the starting temperature of the liquid (which affects the time that surface tension can act on the individual droplets prior to solidification), and the environment provided for cooling. When cooling is slow (such as in gas atomization) and surface tension is high, smooth-surface spheres can form before solidification. With the more rapid cooling of water atomization, irregular shapes tend to be produced.

Other methods of powder manufacture include:

1. *Chemical reduction of particulate compounds* (generally crushed oxides or ores). A large amount of iron powder is produced by reducing iron ore or rolling mill scale. The resulting powders are usually irregular in shape and spongy in texture.
2. *Electrolytic deposition* from solutions or fused salts with process conditions favoring the production of a powdery deposit that does not adhere to the cathode.
3. *Pulverization* or *grinding* of brittle materials (comminution).
4. *Thermal decomposition of particulate hydrides or carbonyls*. Iron and nickel powders are produced by carbonyl decomposition, resulting in small, spherical particles.
5. *Precipitation from solution*.
6. *Condensation of metal vapors*.

Almost any metal, metal alloy, or nonmetal (ceramic, polymer, or wax or graphite lubricant) can be converted into powder form by one or more of the powder production methods. Some methods can produce only elemental powder (often of high purity), while others can produce prealloyed particles. Alloying can also be achieved mechanically by processes that cause elemental powders to successively adhere and break apart. Material is transferred as traces of one particle are left on the other. Unusual compositions can be produced that are not possible with conventional melting. All of the powders may also undergo further operations, such as drying or heat treatment, prior to further processing.

18.4 RAPIDLY SOLIDIFIED POWDER (MICROCRYSTALLINE AND AMORPHOUS)

Increasing the cooling rate of an atomized liquid can result in the formation of an ultra-fine or microcrystalline grain size. In these materials, a large percentage of the atoms are located in grain boundary regions, giving unusual properties (such as high diffusivity), expanded alloy possibilities, and good formability. If the cooling rate approaches or exceeds 10^6 °C/sec, metals can solidify without becoming crystalline. These *amorphous* or glassy metals can also exhibit unusual or unique properties, which include high strength, improved corrosion resistance, and reduced energy to induce and reverse a magnetization. Amorphous metal transformer cores lose 60 to 70% less energy in magnetization than conventional silicon steels. As a result, it is estimated that over half of all new power distribution transformers purchased in the United States will utilize amorphous metal cores.

Production of amorphous material, however, requires immensely high cooling rates and hence ultra-small dimensions. Atomization with rapid cooling and the "splat quenching" of a metal stream onto a cool surface to produce a continuous ribbon are two prominent methods. Since much of the ribbon material is further fragmented into powder, powder metallurgy is the primary means of fabricating useful products from amorphous material.

18.5 POWDER TESTING AND EVALUATION

Key properties of powdered material include bulk chemistry, surface chemistry, particle size and size distribution, particle shape, surface texture, and internal structure. In addition, powders should also be evaluated for their suitability for further processing. *Flow rate* measures the ease by which powder can be fed and distributed into a die. Poor flow characteristics can result in nonuniform die filling as well as nonuniform density and properties in a final product.

Associated with the flow characteristics is the *apparent density*, a measure of a powder's ability to fill available space without the application of external pressure. A low apparent density means that there is a large fraction of unfilled space in the loose-fill powder. *Compressibility* tests evaluate the effectiveness of applied pressure in raising the density of the powder, and *green strength* is used to describe the strength of the pressed powder immediately after compacting. It is well established that higher product density correlates with superior mechanical properties, such as strength and fracture resistance. Good green strength is required to maintain smooth surfaces, sharp corners, and intricate details during ejection from the compacting die or tooling and the subsequent transfer to the sintering operation.

The overall objective is often to achieve a useful balance of the key properties. The smooth-surface spheres produced by gas atomization, for example, tend to pour and flow well, but the compacts have extremely low green strength, disintegrating easily during handling. The irregular particles of water-atomized powder have better compressibility and green strength but poorer flow characteristics. The sponge iron powders produced by chemical reduction of iron oxide are extremely porous and have highly irregular, extremely rough surfaces. They have poor flow characteristics and low compacted density, but green strength is quite high. Thus, the same material can have widely different performance characteristics, depending upon the specifics of powder manufacture.

18.6 POWDER MIXING AND BLENDING

It is rare that a single powder will possess all of the characteristics desired in a given process and product. Most likely, the starting material will be a mixture of various grades or sizes of powder, or powders of different compositions, along with additions of *lubricants* or *binders*.

In powder products, the final chemistry is often obtained by combining pure metal or nonmetal powders, rather than starting with prealloyed material. To produce a uniform chemistry and structure in the final product, therefore, sufficient diffusion must occur during the sintering operation. Unique *composites* can also be produced, such as the distribution of an immiscible reinforcement material in a matrix, or the combination of metals and nonmetals in a single product such as a tungsten carbide–cobalt matrix cutting tool for high-temperature service.

Some powders, such as graphite, can even play a dual role, serving as a lubricant during compaction and a source of carbon as it alloys with iron during sintering to produce steel. Lubricants such as graphite or stearic acid improve the flow characteristics and compressibility at the expense of reduced green strength. Binders produce the reverse effect. Since most lubricants or binders are not wanted in the final product, they are removed (volatilized or burned off) in the early stages of sintering, leaving holes that are reduced in size or closed during subsequent heating.

Blending or *mixing* operations can be done either dry or wet, where water or other solvent is used to enhance particle mobility, reduce dust formation, and lessen explosion hazards. Large lots of powder can be homogenized with respect to both chemistry and distribution of components, sizes, and shapes. Quantities up to 16,000 kg (35,000 lb) have been blended in single lots to ensure uniform behavior during processing and the production of a consistent product.

18.7 COMPACTING

One of the most critical steps in the P/M process is *compaction*. Loose powder is compressed and densified into a shape known as a green compact, usually at room temperature. High product density and the uniformity of that density throughout the compact are generally desired characteristics. In addition, the mechanical interlocking and cold welding of the particles should provide sufficient green strength for in-process handling and transport to the sintering furnace.

Most compacting is done with mechanical presses and rigid tools, but hydraulic and hybrid (combinations of mechanical, hydraulic, and pneumatic) presses can also be used. Figure 18-3 shows a typical mechanical press for compacting powders and a removable set of compaction tooling. The removable die sets allow the time-consuming alignment and synchronization of tool movements to be set up while the press is producing parts with another die set. Compacting pressures generally range between 3 and 120 tons/in^2. depending on material and application (see Table 18-1), with the range of 10 to 50 tons/in^2. being the most common. While most P/M presses have total capacities of less than 100 tons, increasing numbers are being purchased with higher capacity. Because of pressures and press capacity, powder metallurgy products are often limited to pressing areas of less than 10 square inches, but larger parts have become more common. Some P/M presses now have capacities up to 3000 tons and are capable of pressing areas up to 100 square inches. When even larger products are desired, compaction can be performed by dynamic methods, such as use of an explosively induced shock wave. Metalforming processes, such as rolling, forging, extrusion, and swaging, have also been adapted for powder compaction.

TABLE 18-1 Typical Compacting Pressures for Various Applications

	Compaction Pressures	
Application	tons/in.^{2}	Mpa
Porous metals and filters	3–5	40–70
Refractory metals and carbides	5–15	70–200
Porous bearings	10–25	146–350
Machine parts (medium-density iron & steel)	20–50	275–690
High-density copper and aluminum parts	18–20	250–275
High-density iron and steel parts	50–120	690–1650

FIGURE 18-3 (Left) Typical press for the compacting of metal powders. A removable die set (right) allows the machine to be producing parts with one die set while another is being fitted to produce a second product. (*Courtesy of Alfa Laval, Inc., Warminster, PA.*)

Figure 18-4 shows the typical compaction sequence for a mechanical press. With the bottom punch in its fully raised position, a feed shoe moves into position over the die. The feed shoe is an inverted container filled with powder, connected to a large powder container by a flexible feed tube. With the feed shoe in position, the bottom punch descends to a preset fill depth, and the shoe retracts, with its edges leveling the powder. The upper punch then descends and compacts the powder as it penetrates the die. The upper punch retracts and the bottom punch then rises to eject the green compact. As the die shoe advances for the next cycle, its forward edge clears the compacted product from the press, and the cycle repeats.

During uniaxial or one-direction compaction, the powder particles move primarily in the direction of the applied force. Since the loose-fill dimensions are 2 to 2.5 times the pressed dimensions, the amount of particle travel in the pressing direction can be substantial. The amount of lateral flow, however, is quite limited. In fact, it is rare to find a particle in the compacted product that has moved more than three particle diameters off of its original axis of pressing. Thus, the powder does not flow like a liquid; it simply

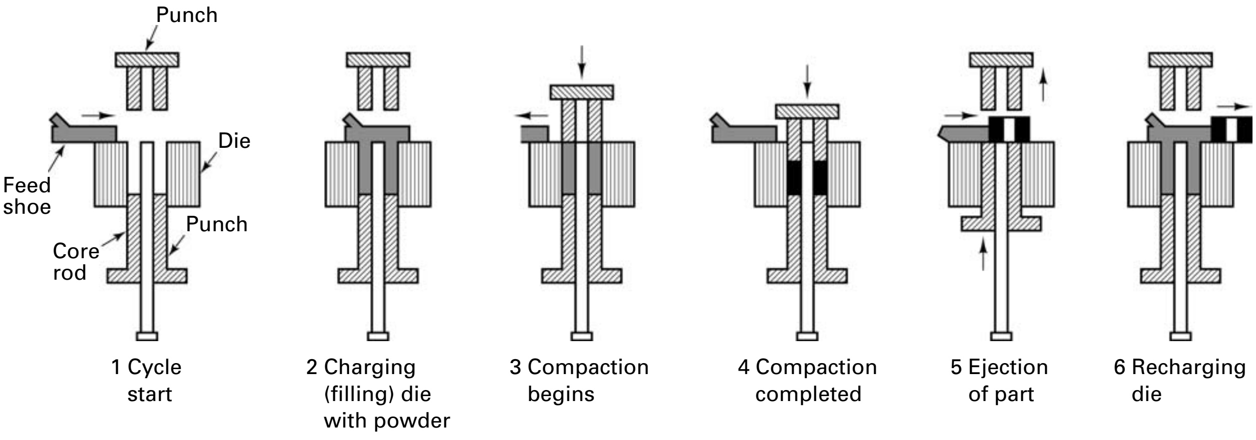

FIGURE 18-4 Typical compaction sequence for a single-level part, showing the functions of the feed shoe, die, core rod, and upper and lower punches. Loose powder is shaded; compacted powder is solid black.

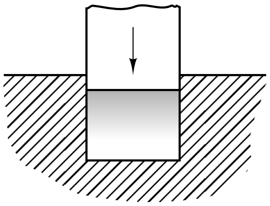

FIGURE 18-5 Compaction with a single moving punch, showing the resultant nonuniform density (shaded), highest where particle movement is the greatest.

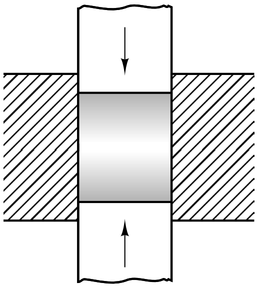

FIGURE 18-6 Density distribution obtained with a double-acting press and two moving punches. Note the increased uniformity compared to Figure 18-5. Thicker parts can be effectively compacted.

compresses until an equal and opposing force is created. This opposing force is probably a combination of (1) resistance by the bottom punch and (2) friction between the particles and the die surfaces. Densification occurs by particle movement as well as plastic deformation of the individual particles.

As illustrated in Figure 18-5, when the pressure is applied by only one punch, maximum density occurs below the punch and decreases as one moves down the column. It is very difficult to transmit uniform pressures and produce uniform density throughout a compact, especially when the thickness is large. By use of a double-action press, where pressing movements occur from both top and bottom (Figure 18-6), thicker products can be compacted to a more uniform density. Since side-wall friction is a key factor in compaction, the resulting density shows a strong dependence on both the thickness and width of the part being pressed. For uniform compaction, the ratio of thickness/width should be kept below 2.0 whenever possible. When the ratio exceeds 2.0, the products tend to exhibit considerable variation in density.

As shown in Figure 18-7, the average density of the compact depends on the amount of pressure that is applied, with the specific response being strongly dependent on the characteristics of the powder being compressed (its size, shape, surface texture, mechanical properties, etc.). The final density may be reported as either an absolute density in units such as grams per cubic centimeter or as a percentage of the pore-free or theoretical density. The difference between this percentage and 100% corresponds to the amount of void space remaining within the compact.

Figure 18-8 shows that a single displacement will produce different degrees of compaction in different thicknesses of powder. It is impossible, therefore, for a single punch to produce uniform density in a multithickness part. When more than one thickness is required, more complicated presses or compaction methods must be employed. Figure 18-9 illustrates two methods of compacting a dual-thickness part. By providing different amounts of motion to the various punches and synchronizing these movements to provide simultaneous compaction, a uniform-density product can be produced.

Since the complexity of the part dictates the complexity of equipment, powder metallurgy components have been grouped into classes. Class 1 components are the simplest and easiest to compact. They are thin, single-level parts that can be pressed with a force from one direction. The thickness is generally less than $\frac{1}{4}$ inch (6.35 mm). Class 2 parts are single-level parts of any thickness that require pressing from two directions.

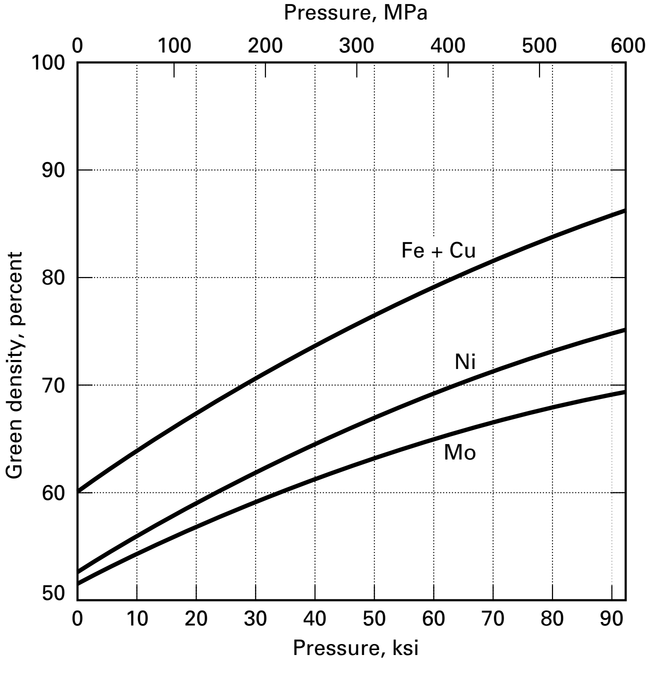

FIGURE 18-7 Effect of compacting pressure on green density (the density after compaction but before sintering). Separate curves are for several commercial powders.

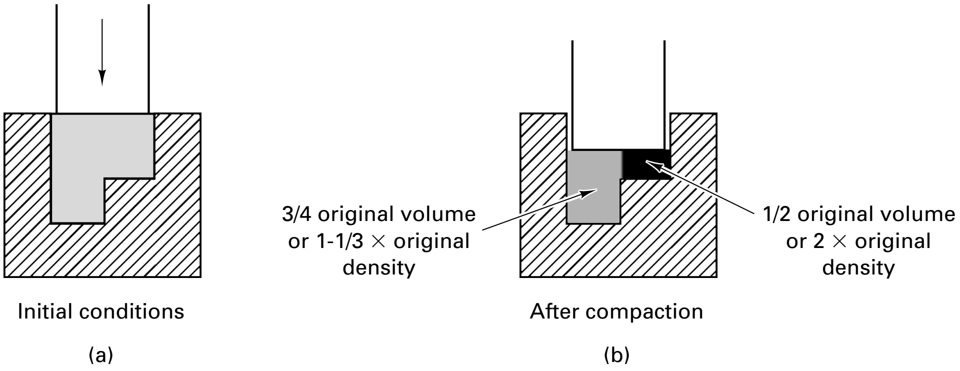

FIGURE 18-8 Compaction of a two-thickness part with only one moving punch. (a) Initial conditions; (b) after compaction by the upper punch. Note the drastic difference in compacted density.

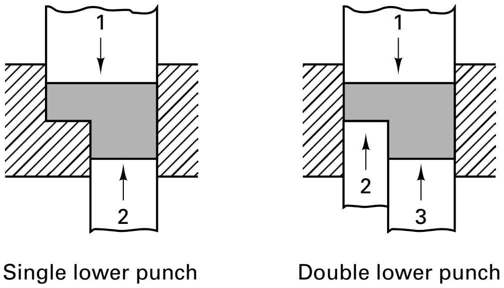

FIGURE 18-9 Two methods of compacting a double-thickness part to near-uniform density. Both involve the controlled movement of two or more punches.

These are usually thicker parts. Class 3 parts are double-level parts that require pressing from two directions. Class 4 parts are the most complex of those produced by rigid die compaction. They are multilevel parts that require two or more pressing motions. These four classes are summarized in both Table 18-2 and Figure 18-10.

If an extremely complex shape is desired, the powder is generally encapsulated in a flexible mold, which is then immersed in a pressurized gas or liquid. This process is known as *isostatic* (uniform-pressure) *compaction*. Because the pressure is applied in all directions, lower compaction pressures produce densities higher than conventional punch-and-die compaction. Production rates are extremely low, but parts with weights up to several hundred pounds have been effectively compacted.

Warm compaction emerged as a common practice in the 1990s. By preheating the powder prior to pressing, the metal is softened and responds better to the applied pressures. The better compaction results in improved properties, both in the as-compacted state and after final processing.

TABLE 18-2 Features that Define the Various Classes of Press-and-Sinter P/M Parts

Class	Levels	Press Actions
1	1	Single
2	1	Double
3	2	Double
4	More than 2	Double or multiple

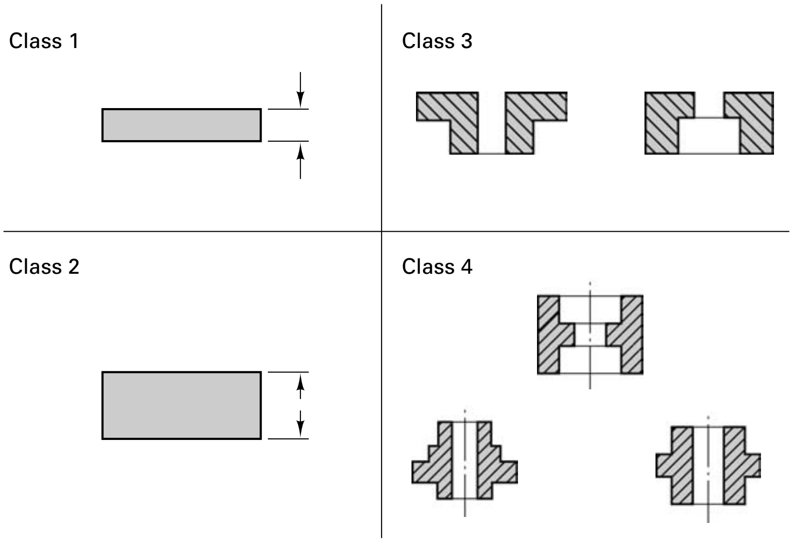

FIGURE 18-10 Sample geometries of the four basic classes of press-and-sinter powder metallurgy parts. Note the increased pressing complexity that would be required as class increases.

Compaction can also be enhanced by increasing the amount of lubricant in the powder. This reduces the friction between the powder and the die wall, as well as improving the transmission of pressure through the powder. If too much lubricant is used, however, the green strength may be reduced to the point where it is insufficient for part ejection and handling, or the final properties may become unacceptable.

While pressing rates vary widely, small mechanical presses can typically compact up to 100 pieces per minute. By means of bulk movement of particles, deformation of individual particles, and particle fracture or fragmentation, mechanical compaction can raise the density of loose powder to about 80% of an equivalent cast or forged metal. Sufficient strength can be imparted to retain the shape and permit a reasonable amount of careful handling. In addition, the compaction process sets both the nature and distribution of the porosity remaining in the product.

Because powder particles tend to be somewhat abrasive and high pressures are involved during compaction, wear of the tool components is a major concern. Consequently, compaction tools are usually made of hardened tool steel. For particularly abrasive powders, or for high-volume production, cemented carbides may be employed. Die surfaces should be highly polished and the dies should be heavy enough to withstand the high pressing pressures. Lubricants are also used to reduce die wear.

■ 18.8 SINTERING

In the *sintering* operation, the pressed-powder compacts are heated in a controlled atmosphere to a temperature below the melting point but high enough to permit solid-state diffusion, and held for sufficient time to permit bonding of the particles. Most metals are sintered at temperatures of 70 to 80% of their melting point, while certain refractory materials may require temperatures near 90%. Table 18-3 presents a summary of some common sintering temperatures. When the product is composed of more than one material, the sintering temperature may be above the melting temperature of one or more components. The lower-melting-point materials then melt and flow into the voids between the remaining particles, and the process becomes *liquid-phase sintering*.

Most sintering operations involve *three stages*, and many sintering furnaces employ three corresponding zones. The *first operation*, the *burn-off* or *purge*, is designed to combust any air, volatilize and remove lubricants or binders that would interfere with good bonding, and slowly raise the temperature of the compacts in a controlled manner. Rapid heating would produce high internal pressure from air entrapped in closed pores or volatilizing lubricants, and would result in swelling or fracture of the compacts. When the compacts contain appreciable quantities of volatile materials, their removal creates additional *porosity* and *permeability* within the pressed shape. The manufacture of products such as metal filters is designed to take advantage of this feature. When the products are load-bearing components, however, high amounts of porosity are undesirable, and the amount of volatilizing lubricant is kept to an optimized minimum. The *second, or high-temperature, stage* is where the desired solid-state diffusion and bonding between the powder particles take place. As the material seeks to lower its surface energy, atoms move toward the points of contact between the particles. The areas of contact become larger, and the part becomes a solid mass with small pores of various sizes and shapes. The mechanical bonds of compaction become true metallurgical bonds. The time in this stage must be sufficient to produce the desired density and final properties, usually varying from 10 minutes to several hours. Finally, a *cooling period* is required to lower the temperature of the products while retaining them in a controlled atmosphere. This feature serves to prevent oxidation that would occur upon direct discharge into air as well as possible thermal shock from rapid cooling. Both batch and continuous furnaces are used for sintering.

All three stages of sintering must be conducted in the oxygen-free conditions of a *vacuum* or *protective atmosphere*. This is critical because the compacted shapes typically have 10 to 25% residual porosity, and some of the internal voids are connected to exposed surfaces. At elevated temperatures, rapid oxidation would occur and significantly impair the quality of interparticle bonding. *Reducing atmospheres*, commonly based on

TABLE 18-3 Typical Sintering Temperatures for Some Common Metals and Materials

Metal	Sintering Temperature °C	Sintering Temperature °F
Aluminum alloys	590–620	1095–1150
Brass	850–950	1550–1750
Copper	750–1000	1400–1850
Iron/steel	1100–1200	2000–2200
Stainless steel	1200–1280	2200–2350
Cemented carbides	1350–1450	2450–2650
Molybdenum	1600–1700	2900–3100
Tungsten	2200–2300	4000–4200
Various ceramics	1400–2100	2550–3800

hydrogen, dissociated ammonia, or cracked hydrocarbons, are preferred since they can reduce any oxide already present on the particle surfaces and combust harmful gases that are liberated during the sintering. *Inert gases* cannot reduce existing oxides but will prevent the formation of any additional contaminants. *Vacuum* sintering is frequently employed with stainless steel, titanium, and the refractory metals. *Nitrogen atmospheres* are also common.

During the sintering operation, a number of changes occur in the compact. Metallurgical bonds form between the powder particles as a result of solid-state atomic diffusion, and strength, ductility, toughness, and electrical and thermal conductivities all increase. If different chemistry powders were blended, interdiffusion promotes the formation of alloys or intermetallic phases. As the pores reduce in size, there will be a concurrent increase in density and contraction in product dimensions. To meet final tolerances, the dimensional shrinkage will have to be compensated through the design of oversized compaction dies. During sintering, not all of the porosity is removed, however. Conventional pressed-and-sintered P/M products generally contain between 5 and 25% residual porosity.

Sinter brazing is a process in which two or more separate pieces are joined by brazing while they are also being sintered. The individual pieces are compacted separately, and are assembled with the braze metal positioned so it will flow into the joint. When the assembly is heated for sintering, the braze metal melts and flows between the joint surfaces to create the bond. As sintering continues, much of the braze metal diffuses into the surrounding metal, producing a final joint that is often stronger than the materials being joined.

18.9 HOT-ISOSTATIC PRESSING

In conventional press-and-sinter powder metallurgy, the pressing or compaction is usually performed at room temperature and the sintering, at atmospheric pressure. *Hot-isostatic pressing* (HIP) combines powder compaction and sintering into a single operation that involves gas-pressure squeezing at elevated temperature. While this may seem to be an improvement over the two-step approach, it should be noted that heated powders may need to be "protected" or isolated from harmful environments, and the pressurizing media must be prevented from entering the voids between the particles. One approach to hot-isostatic pressing begins by sealing the powder in a flexible, airtight, evacuated container, which is then subjected to a high-temperature, high-pressure environment. Conditions for processing irons and steels involve pressures around 10,000 to 15,000 psi (70 to 100 MPa) coupled with temperatures in the neighborhood of 1250°C (2300°F). For the nickel-based superalloys, refractory metals, and ceramic powders, the equipment must be capable of 45,000 psi (310 MPa) and 1500°C (2750°F). Multiple pieces, totaling up to several tons, can now be processed in a single cycle that typically lasts several hours.

After processing, the products emerge at full density with uniform, isotropic properties that are often superior to those of other processes. Near-net shapes are possible, thereby reducing material waste and costly machining operations. Since the powder is totally isolated and compaction and sintering occur simultaneously, the process is attractive for reactive or brittle materials, such as beryllium, uranium, zirconium, and titanium. Since die compaction is not required, large parts are now possible, and shapes can be produced that would be impossible to eject from rigid compaction dies. Hot-isostatic pressing has also been employed to densify existing parts (such as those that have been conventionally pressed and sintered), heal internal porosity in castings, and seal internal cracks in a variety of products. The elimination or reduction of defects yields startling improvements in strength, toughness, fatigue resistance, and creep life.

Several aspects of the HIP process make it expensive and unattractive for high-volume production. The first is the high cost of *canning* the powder in a flexible isolating medium that can resist the subsequent temperatures and pressures, and then later removing this material from the product (*decanning*). Sheet metal containers are most common, but glass and even ceramic molds have been used. The second problem involves the relatively long time for the HIP cycle. While process advances have reduced cycle times from 24 hours to 6 to 8 hours, production is still limited to several loads a day, and the number of parts per load is limited by the ability to produce and maintain uniform temperature throughout the pressure chamber.

The *sinter-HIP* process and *pressure-assisted sintering* are techniques that have been developed to produce full-density powder products without the expense of canning and decanning. Conventionally compacted P/M parts are placed in a pressurizable chamber and sintered (heated) under vacuum for a time that is sufficient to seal the surface and isolate all internal porosity. (*Note:* This generally requires achieving a density greater than 92 to 95%.) While maintaining the elevated temperature, the vacuum is broken and high pressure is then applied for the remainder of the process. The sealed surface produced during the vacuum sintering acts as an isolating can during the high-pressure stage. Since these processes start with as-compacted powder parts, they eliminate the additional heating and cooling cycle that would be required if parts were first sintered in the conventional manner and then subjected to the HIP process for further densification.

■ 18.10 OTHER TECHNIQUES TO PRODUCE HIGH-DENSITY P/M PRODUCTS

The high-temperature metal deformation processes can also be used to produce high-density P/M parts. Sheets of sintered powder (produced by roll compaction and sintering) can be reduced in thickness and further densified by hot rolling in the process depicted in Figure 18-11. Rods, wires, and small billets can be produced by the hot extrusion of encapsulated powder or pressed-and-sintered slugs. Forging can be applied to form complex shapes from canned powder or simple-shaped sintered preforms. By using powdered material, these processes offer the combined benefits of powder metallurgy and the respective forming process, such as the production of fabricated shapes with uniform fine grain size, uniform chemistry, or unusual alloy composition.

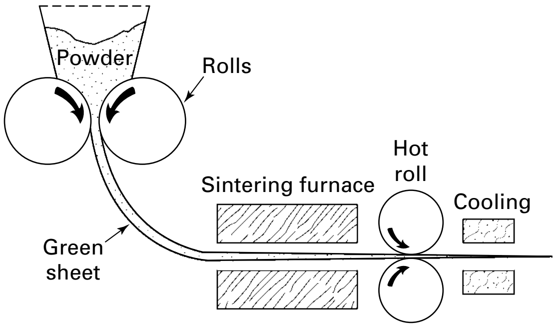

FIGURE 18-11 One method of producing continuous sheet products from powdered feedstock.

The *Ceracon process* is another method of raising the density of conventional pressed-and-sintered P/M products without requiring encapsulation or canning. A heated preform is surrounded by hot granular material, usually smooth-surface ceramic particles. When the assembly is then compacted in a conventional hydraulic press, the granular material transmits a somewhat uniform pressure. Encapsulation is not required since the pressurizing medium is not capable of entering pores in the material. When the pressure cycle is complete, the part and the pressurizing medium separate freely, and the pressure-transmitting granules are reheated and reused.

Yet another means of producing a high-density shape from fine particles is *in situ compaction* or *spray forming* (also known as the *Osprey process*). Consider an atomizer similar to that of Figure 18-2a, in which jets of inert or harmless gas (nitrogen or carbon dioxide) propel molten droplets down into a collecting container. If the droplets solidify before impact, the container fills with loose powder. If the droplets remain liquid during their flight, the container fills with molten metal, which then solidifies into a conventional casting. However, if the cooling of the droplets is controlled so that they are semisolid (and computers can provide the necessary process control), they act as "slush balls" and flatten upon impact. The remaining freezing occurs quickly, and the resultant product is a uniform chemistry, fine grain size, high-density (in excess of 98%) solid. Depending on the shape of the collecting container, the spray-formed product can be a finished part, a strip or plate, a deposited coating, or a preform for subsequent operations, such as forging. Both ferrous and nonferrous products can be produced with deposition rates as high as 200 kilograms (400 pounds) per minute. Unique composites can be produced by the simultaneous deposition of two or more materials, injecting secondary particles into the stream and promoting in-stream reactions.

■ 18.11 METAL INJECTION MOLDING (MIM) OR POWDER INJECTION MOLDING (PIM)

For many years, injection molding has been used to produce small, complex-shaped components from plastic. A thermoplastic resin is heated to impart the necessary degree of fluidity and is then pressure injected into a die, where it cools and hardens. Die casting is a similar process for metals but is restricted to alloys with relatively low melting temperature, such as lead-, zinc-, aluminum-, and copper-based materials. Small, complex-shaped products of the higher-melting-point metals are generally made by more costly processes, which include investment casting, machining directly from metal stock, or conventional powder metallurgy. *Metal injection molding (MIM),* also called *powder injection molding (PIM),* is a rather recent extension of conventional powder metallurgy that combines the shape-forming capability of plastics, the precision of die casting, and the materials flexibility of powder metallurgy.

Since powdered material does not flow like a fluid, complex shapes are produced by first combining ultra-fine (usually in the range of 3 to 20 μm) spherical-shaped metal, ceramic, or carbide powder with a low-molecular-weight thermoplastic or wax material in a mix that is typically 60% powder by volume. This mixture is frequently produced in the form of pellets or granules, which become the feedstock for the injection process. After heating to a pastelike consistency (about 260ºC or 500ºF), the material is injected into a heated mold cavity under sufficient pressure (about 10,000 psi) to ensure die filling. After cooling and ejection, the binder material is removed by one of a variety of processes that include solvent extraction, controlled heating to above the volatilization temperature, or heating in the presence of a catalyst that breaks the binder down into removable products. Removing the binder is currently the most expensive and time-consuming part of the process. Heating rates, temperatures, and debinding times must be carefully controlled and adjusted for part thickness. The parts then undergo conventional sintering, where any remaining binder is first removed, and the diffusion processes then set the final properties of the product. During sintering, MIM parts typically shrink 15 to 25%, and the density increases from about 60% up to as much as 99% of ideal. (*Note:* Since MIM parts are molded without density variations, the subsequent shrinkage tends to be both uniform and repeatable.) Secondary processes may take the

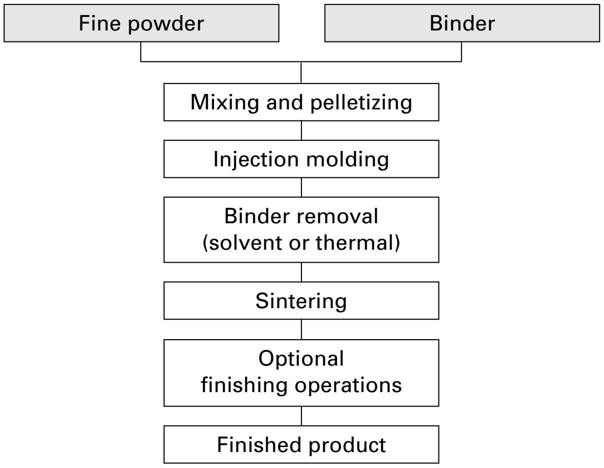

FIGURE 18-12 Flow chart of the metal injection molding process (MIM) used to produce small, intricate-shaped parts from metal powder.

form of surface cleaning or finishing, plating, machining, or heat treating. The high final density enables the secondary processes to be conducted in the same manner as for wrought products. Figure 18-12 summarizes the full sequence of activities, and Table 18-4 provides a summary comparison of conventional powder metallurgy and MIM.

While the size of conventional P/M products is generally limited by press capacity, the size of P/M injection moldings is more limited by economics (cost of the fine powders) and binder removal. The best candidates for P/M injection molding are complex-shaped parts with thicknesses of less than $\frac{1}{4}$ inch, weights under 2 ounces (20 grams), and made from a metal that cannot be economically die cast. MIM parts compete with and frequently replace machined components or investment castings. The shapes are generally too complex to compact by conventional powder metallurgy, and the injection molding can often reduce or eliminate costly machining. Section thicknesses as small as 0.010 inch are possible because of the fineness of the powder. As a general rule, the smaller the part and the greater the complexity, the more likely MIM will be an attractive alternative to machining, casting, stamping, cold forming, or traditional powder metallurgy. Figure 18-13 shows a variety of MIM products.

Medium to large production volumes (more than 2000 to 5000 identical parts) are generally required to justify the cost of die design and manufacture. The relatively high final density (95 to 99% compared to 75 to 90% for conventional P/M parts), the uniformity of that density, the close tolerances (0.3 to 0.5%), and excellent surface finish (about 125 μ in.) all combine to make the process attractive for many applications. Parts can be made from a wide selection of metal alloys, including steels, stainless steel, tool steel, brass, copper, titanium, tungsten, nickel-based superalloys, ceramics, and many specialty materials. The final properties are superior to those of conventional powder metallurgy and are generally close to those of wrought or cast equivalents.

TABLE 18-4 Comparison of Conventional Powder Metallurgy and Metal Injection Molding

Feature	P/M	MIM
Particle size	20–250 μm	<20 μm
Particle response	Deforms plastically	Undeformed
Porosity (% nonmetal)	10–20%	30–40%
Amount of binder/lubricant	0.5–2%	30–40%
Homogeneity of green part	Nonhomogeneous	Homogeneous
Final sintered density	<92%	>96%

FIGURE 18-13 Metal injection molding (MIM) is ideal for producing small, complex parts. *(Courtesy of Megamet Solid Metals, Inc., St. Louis, MO.)*

■ 18.12 SECONDARY OPERATIONS

Powder metallurgy products are often ready to use when they emerge from the sintering furnace. Many P/M products, however, utilize one or more secondary operations to provide enhanced precision, improved properties, or special characteristics.

During sintering, product dimensions shrink due to densification. In addition, warping or distortion may occur during nonuniform cool-down from elevated temperatures. As a result, a second pressing operation, known as *repressing, coining*, or *sizing*, may be required to restore or improve dimensional precision. The part is placed in a die and subjected to pressures equal to or greater than the initial pressing pressure. A small amount of plastic flow takes place, resulting in high dimensional accuracy, sharp detail, and improved surface finish. The associated cold working and increase in part density may combine to increase part strength by 25 to 50%. (*Note:* Because of the shrinkage that occurs during sintering, repressing cannot be performed with the same set of tooling that was used for the original powder compaction.)

If massive metal deformation takes place in the second pressing, the operation is known as *P/M forging*. Conventional powder metallurgy is used to produce a preform, which is one forging operation removed from the finished shape. The normal forging sequence of billet or bloom production, shearing, reheating, and sequential deformation is replaced by the manufacture of a comparatively simple-shaped powder metallurgy preform followed by a single hot-forging operation. The forging stage produces a more complex shape, adds precision, provides the benefits of metal flow, and increases the density (often up to 99%). The increase in density is accompanied by a significant improvement in mechanical properties. While protective atmospheres or coatings are required to prevent oxidation of the powder preform during heating and hot forging, the P/M process can often provide a significant reduction in scrap or waste. (By controlling preform weight to within 0.5%, flash-free forging can often be performed.) Forged products can benefit from the improved properties of powder metallurgy, such as the absence of segregation, the uniform fine grain size, and the use of novel alloys or unique composites. The conventional powder metallurgy process can be expanded to larger-size products with increased complexity. The tolerance requirements of cams, splines, and gears can often be met without subsequent machining. Figure 18-14 illustrates the reduction in scrap by comparing the same part made by conventional forging and the P/M forge approach. P/M forged connecting rods, like those shown in Figure 18-15, currently account for more than 60% of all connecting rods used in North America and are typical of the high-volume steel parts currently being produced.

Impregnation and infiltration are secondary processes that utilize the interconnected porosity or permeability of low-density P/M products. *Impregnation* refers to the forcing of oil or other liquid, such as a polymeric resin, into the porous network. This can be done by immersing the part in a bath and applying pressure or by a combination vacuum-pressure process. The most common application is that of oil-impregnated bearings. After impregnation, the bearing material will contain from 10 to 40% oil by volume, which will provide lubrication over an extended lifetime of operation. In a similar manner, P/M parts can be impregnated with fluorocarbon resin (such as Teflon) to produce products offering a combination of high strength and low friction.

When the presence of pores is undesirable, P/M products may be subjected to metal *infiltration*. In this process a molten metal or alloy with a melting point lower than the P/M constituent flows into the interconnected pores of the product under pressure or by capillary action. Steel parts are often infiltrated with copper, for example. After infiltration, the engineering properties such as strength and toughness are improved to a level where they are generally comparable to those of solid metal products. Infiltration can also be used to seal pores prior to plating, improve machinability or corrosion resistance, or make the components gas- or liquid-tight. Additional heating after infiltration can cause interdiffusion between the infiltrant and base metal, further enhancing mechanical properties.

FIGURE 18-14 Comparison of conventional forging and the forging of a powder metallurgy preform to produce a gear blank (or gear). Moving left to right, the top sequence shows the sheared stock, upset section, forged blank, and exterior and interior scrap associated with conventional forging. The finished gear is generally machined from the blank with additional generation of scrap. The bottom pieces are the powder metallurgy preform and forged gear produced entirely without scrap by P/M forging. *(Courtesy of GKN Sinter Metals, Auburn Hills, MI.)*

FIGURE 18-15 P/M forged connecting rods have been produced by the millions. *(Courtesy of Metal Powder Industries Federation, Princeton, NJ.)*

Powder metallurgy products can also be subjected to the conventional finishing operations of *heat treatment, machining*, and *surface treatment*. If the part is of high density (<10% porosity) or has been metal impregnated, conventional processing can often be employed. Special precautions must be taken, however, when processing low-density P/M products. During heat treatment, protective atmospheres must again be used and certain liquid quenchants should be avoided. Speeds and feeds must be adjusted when machining, and care should be taken to avoid pickup of lubricant or coolant. In general, P/M products should be machined using sharp tools, light cuts, and high feed rates. When a large amount of machining is required, special machinability-enhancing additions may be incorporated into the initial powder blend. Nearly all common methods of surface finishing can be applied to P/M products, including platings and coatings, diffusion treatments, surface hardening, and steam treatment (which is used to produce a hard, corrosion-resistant oxide on ferrous parts). As with the other secondary processes, some process modifications may be required if the part has a reasonable amount of porosity or permeability. Since most parts are small and are produced in large quantity, barrel tumbling is another common means of cleaning, deburring, and surface modification.

18.13 PROPERTIES OF P/M PRODUCTS

Because the properties of powder metallurgy products depend on so many variables—type and size of powder, amount and type of lubricant, pressing pressure, sintering temperature and time, finishing treatments, and so on—it is difficult to provide generalized information. Products can range all the way from low-density, highly porous parts with tensile strengths as low as 10 ksi (70 MPa) up to high-density pieces with tensile strengths of 180 ksi (1250 MPa) or greater.

As shown in Figure 18-16, most mechanical properties exhibit a strong dependence on product density, with the fracture-limited properties of toughness, ductility, and fatigue life being more sensitive than strength and hardness. The voids in the P/M part act as stress concentrators and assist in starting and propagating fractures. The yield strength of P/M products made from the weaker metals is often equivalent to the same material in wrought form. If higher-strength materials are used or the fracture-related tensile strength is specified, the properties of the P/M product tend to fall below those of wrought equivalents by varying but usually substantial amounts. Table 18-5 shows the properties of a few powder metallurgy materials compared with those of wrought material of similar composition. When larger presses or processes such as P/M forging or hot-isostatic pressing are used to produce higher density, the strength of the P/M products approaches that of the wrought material. If the processing results in full density

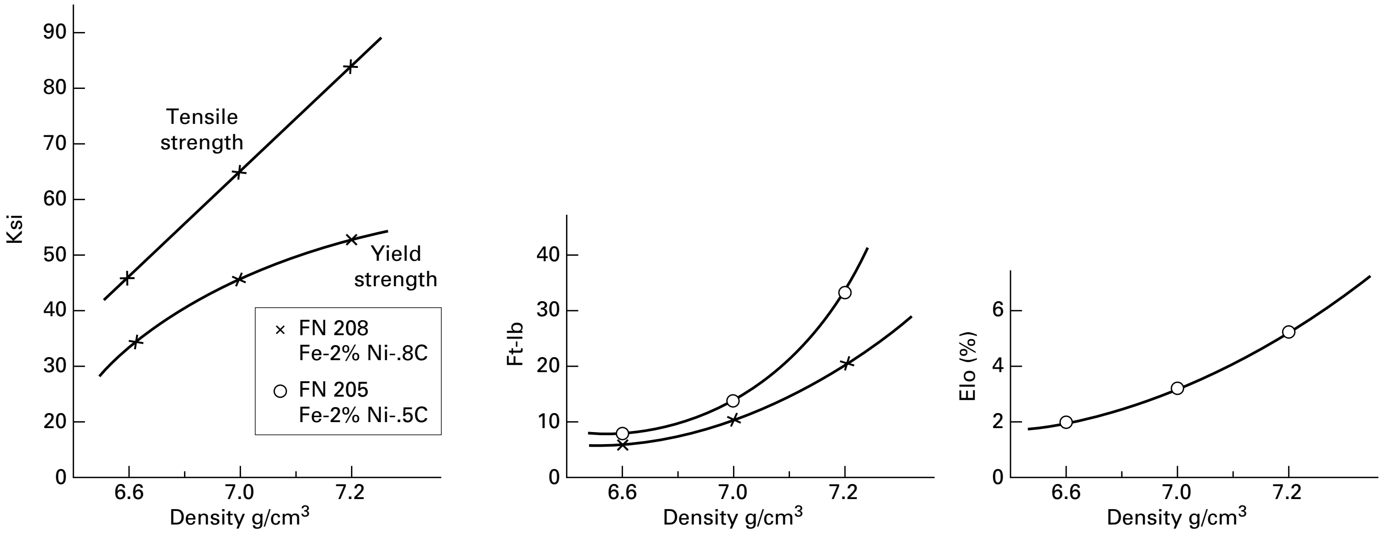

FIGURE 18-16 Mechanical properties versus as-sintered density for two iron-based powders. Properties depicted include yield strength, tensile strength, Charpy impact energy (shown in ft-lbs), and percent elongation in a 1-in. gage length.

TABLE 18-5 Comparison of Properties of Powder Metallurgy Materials and Equivalent Wrought Metals (Note how porosity diminishes mechanical performance)

Material[a]	Form and Composition	Condition[b]	Percent of Theoretical Density	Tensile Strength		Elongation in 2 in. (%)
				10^3 psi	Mpa	
Iron	Wrought	HR	—	48	331	30
	P/M—49% Fe min	As sintered	89	30	207	9
	P/M—99% Fe min	As sintered	94	40	276	15
Steel	Wrought AISI 1025	HR	—	85	586	25
	P/M—0.25% C, 99.75% Fe	As sintered	84	34	234	2
Stainless steel	Wrought type 303	Annealed	—	90	621	50
	P/M type 303	As sintered	82	52	358	2
Aluminum	Wrought 2014	T6	—	70	483	20
	P/M 201 AB	T6	94	48	331	2
	Wrought 6061	T6	—	45	310	15
	P/M 601 AB	T6	94	36.5	252	2
Copper	Wrought OFHC	Annealed	—	34	234	50
	P/M copper	As sintered	89	23	159	8
		Repressed	96	35	241	18
Brass	Wrought 260	Annealed	—	44	303	65
	P/M 70% Cu-30% Zn	As sintered	89	37	255	26

[a] Equivalent wrought metal shown for comparison. [b] HR, hot rolled; T6, age hardened.

with fine grain size, P/M parts can actually have properties that exceed the wrought or cast equivalents. Since the mechanical properties of powder metallurgy products are so dependent upon density, *it is important that products be designed and materials selected so that the final properties will be achieved with the anticipated amount of final porosity*.

Physical properties can also be affected by porosity. Corrosion resistance tends to be reduced due to the presence of entrapment pockets and fissures. Electrical, thermal, and magnetic properties all vary with density, usually decreasing with the presence of pores. Porosity actually increases the ability to damp both sound and vibration, however, and many P/M parts have been designed to take advantage of this feature.

18.14 DESIGN OF POWDER METALLURGY PARTS

Powder metallurgy is a manufacturing system whose ultimate objective is to economically produce products for specific engineering applications. Success begins with good design and follows with good material and proper processing. In designing parts that are to be made by powder metallurgy, it must be remembered that P/M is a special manufacturing process and provision should be made for its unique factors. Products that are converted from other manufacturing processes without modification in design rarely perform as well as parts designed specifically for manufacture by powder metallurgy. Some basic rules for the design of P/M parts are as follows:

1. The shape of the part must permit ejection from the die. Side-wall surfaces should be parallel to the direction of pressing. Holes or recesses should have uniform cross section with axes and side walls parallel to the direction of punch travel.
2. The shape of the part should be such that powder is not required to flow into small cavities such as thin walls, narrow splines, or sharp corners.
3. The shape of the part should permit the construction of strong tooling.
4. The thickness of the part should be within the range for which P/M parts can be adequately compacted.
5. The part should be designed with as few changes in section thickness as possible.

6. Parts can be designed to take advantage of the fact that certain forms and properties can be produced by powder metallurgy that are impossible, impractical, or uneconomical to obtain by any other method.
7. The design should be consistent with available equipment. Pressing areas should match press capability, and the number of thicknesses should be consistent with the number of available press actions.
8. Consideration should also be made for product tolerances. Higher precision and repeatability are observed for dimensions in the radial direction (set by the die) than for those in the axial or pressing direction (set by punch movement).
9. Finally, design should consider and compensate for the dimensional changes that will occur after pressing, such as the shrinkage that occurs during sintering.

The ideal powder metallurgy part, therefore, has a uniform cross section and a single thickness that is small compared to the cross-sectional width or diameter. More complex shapes are indeed possible, but it should be remembered that uniform strength and properties require uniform density. Holes that are parallel to the direction of pressing are easily accommodated. Holes at angles to this direction, however, must be made by secondary processing. Multiple-stepped diameters, reentrant holes, grooves, and undercuts should be eliminated whenever possible. Abrupt changes in section, narrow deep flutes, and internal angles without generous fillets should also be avoided. Straight serrations can be readily molded, but diamond knurls cannot. Punches should be designed to eliminate sharp points or thin sections that could easily wear or fracture. Figure 18-17 illustrates some of these design recommendations and restrictions.

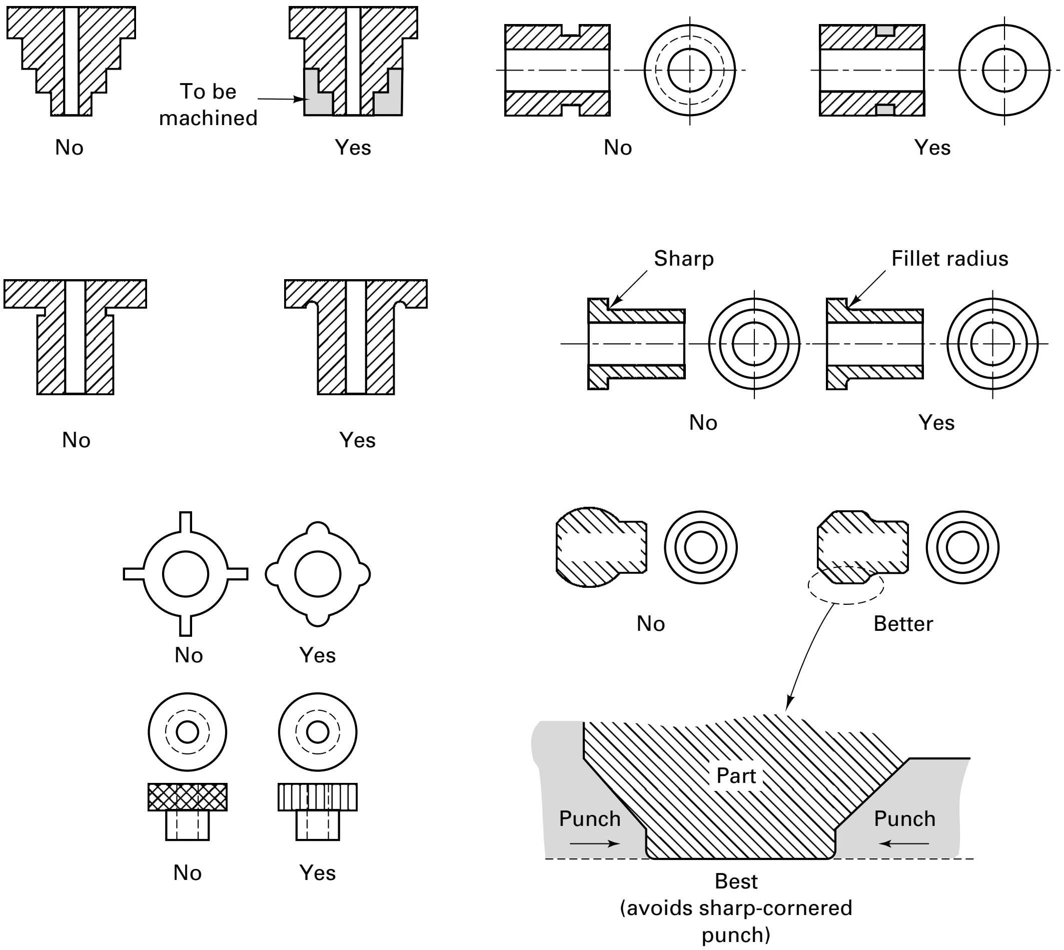

FIGURE 18-17 Examples of poor and good design features for powder metallurgy products. Recommendations are based on ease of pressing, design of tooling, uniformity of properties, and ultimate performance.

18.15 POWDER METALLURGY PRODUCTS

The products that are commonly produced by powder metallurgy can generally be classified into six groups.

1. *Porous or permeable products, such as bearings, filters, and pressure or flow regulators*. Oil-impregnated bearings, made from either iron or copper alloys, constitute a large volume of P/M products. They are widely used in home appliance and automotive applications since they require no lubrication or maintenance during their service life. P/M filters can be made with pores of almost any size, some as small as 0.0025 mm (0.0001 in.). Unlike many alternative filters, powder metallurgy filters can withstand the conditions of elevated temperature, high applied stresses, and corrosive environments.
2. *Products of complex shapes that would require considerable machining when made by other processes.* Because of the dimensional accuracy and fine surface finish that are characteristic of the P/M process, many parts require no further processing, and others require only a small amount of finish machining. Tolerances can generally be held to within 0.1 mm (0.005 in.). Large numbers of small gears are currently being made by the powder metallurgy process. Other complex shapes, such as pawls, cams, and small activating levers, can be made quite economically.
3. *Products made from materials that are difficult to machine or materials with high melting points.* Some of the first modern uses of powder metallurgy were the production of tungsten lamp filaments and tungsten carbide cutting tools.
4. *Products where the combined properties of two or more metals (or metals and nonmetals) are desired.* This unique capability of the powder metallurgy process is applied to a number of products. In the electrical industry, copper and graphite are frequently combined in applications like motor or generator brushes where copper provides the current-carrying capacity and graphite provides lubrication. Bearings have been made of graphite combined with iron or copper or from mixtures of two metals, such as tin and copper, where the harder material provides wear resistance and the softer material deforms in a way that better distributes the load. Electrical contacts often combine copper or silver with tungsten, nickel, or molybdenum. Here, the copper or silver provides high conductivity, while the high melting temperature material provides resistance to fusion when the contacts experience arcing and subsequent closure.
5. *Products where the powder metallurgy process produces clearly superior properties.* The development of processes that produce full density has resulted in P/M products that are clearly superior to those produced by competing techniques. In areas of critical importance such as aerospace applications, the additional cost of the processing may be justified by the enhancement of properties. As another example, consider the production of P/M magnets. A magnetic field can be used to align particles prior to sintering, resulting in a product with extremely high flux density.
6. *Products where the powder metallurgy process offers definite economic advantage.* The process advantages described in the next section often make powder metallurgy the most economical among competing ways to produce a part.

Figure 18-18 shows an array of typical powder metallurgy products.

18.16 ADVANTAGES AND DISADVANTAGES OF POWDER METALLURGY

Like all other manufacturing processes, powder metallurgy has distinct advantages and disadvantages that should be considered if the technique is to be employed economically and successfully. Among the important advantages are these:

1. *Elimination or reduction of machining.* The *dimensional accuracy* and *surface finish* of P/M products are such that subsequent machining operations can be totally eliminated

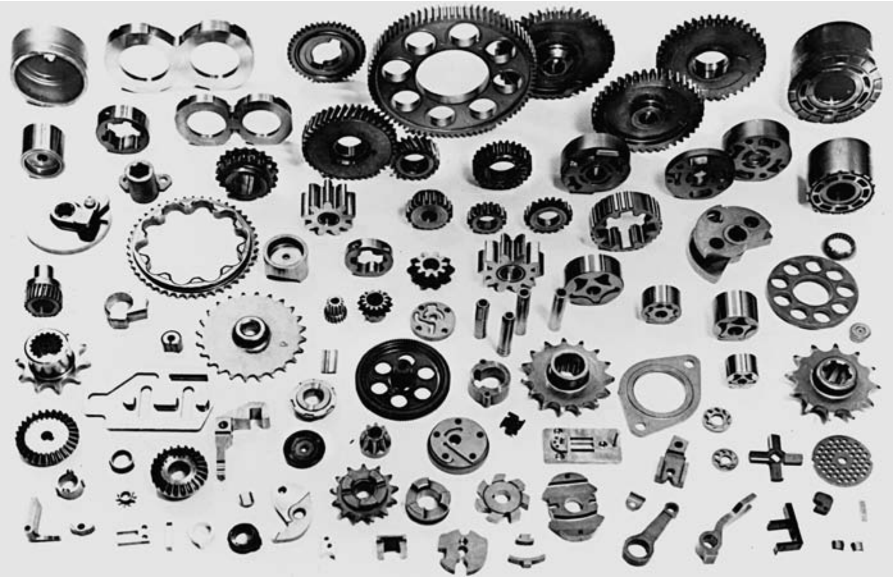

FIGURE 18-18 Typical parts produced by the powder metallurgy process. *(Courtesy of PTX-Pentronix, Inc.)*

for many applications. If unusual dimensional accuracy is required, simple coining or sizing operations can often give accuracies equivalent to those of most production machining. Reduced machining is especially attractive for difficult-to-machine materials.

2. *High production rates*. All steps in the P/M process are simple and readily automated. Labor requirements are low, and product uniformity and reproducibility are among the highest in manufacturing.
3. *Complex shapes can be produced*. Subject to the limitations discussed previously, complex shapes can be produced, such as combination gears, cams, and internal keys. It is often possible to produce parts by powder metallurgy that cannot be economically machined or cast.
4. *Wide variations in compositions are possible*. Parts of very high purity can be produced. Metals and ceramics can be intimately mixed. Immiscible materials can be combined, and solubility limits can be exceeded. Compositions are available that are virtually impossible with any other process. In most cases the chemical homogeneity of the product exceeds that of all competing techniques.
5. *Wide variations in properties are available*. Products can range from low-density parts with controlled permeability to high-density parts with properties that equal or exceed those of equivalent wrought counterparts. Damping of noise and vibration can be tailored into a P/M product. Magnetic properties, wear properties, friction characteristics, and others can all be designed to match the needs of a specific application.
6. *Scrap is eliminated or reduced*. Powder metallurgy is the only common manufacturing process in which no material is wasted. In casting, machining, and press forming, the scrap can often exceed 50% of the starting material. This is particularly important where expensive materials are involved, and powder metallurgy may make it possible to use more costly materials without increasing the overall cost of the product. An example of such a product would be the rare earth magnets.

The major disadvantages of the powder metallurgy process are these:

1. *Inferior strength properties*. Because of the residual porosity, powder metallurgy parts generally have mechanical properties that are inferior to wrought or cast products of the same material. Their use may be limited when high stresses are involved. The required strength and fracture resistance, however, can often be obtained by using different materials or by employing alternate or secondary processing techniques that are unique to powder metallurgy.
2. *Relatively high tooling cost*. Because of the high pressures and severe abrasion involved in the process, the P/M dies must be made of expensive materials and be

relatively massive. Because of the need for part-specific tooling, production quantities of less than 10,000 identical parts are normally not practical.

3. *High material cost*. On a unit weight basis, powdered metals are considerably more expensive than wrought or cast stock. However, the absence of scrap and the elimination of machining can often offset the higher cost of the starting material. In addition, powder metallurgy is usually employed for rather small parts where the material cost per part is not very great.
4. *Size and shape limitations*. The powder metallurgy process is simply not feasible for many shapes. Parts must be able to be ejected from the die. The thickness/diameter (or thickness/width) ratio is limited. Thin vertical sections are difficult, and the overall size must be within the capacity of available presses. Few parts exceed 150 cm^2 (25 in^2.) in pressing area.
5. *Dimensions change during sintering*. While the actual amount depends on a variety of factors, including as-pressed density, sintering temperature, and sintering time, dimensional change can often be predicted and controlled.
6. *Density variations produce property variations*. Any nonuniform product density that is produced during compacting generally results in property variations throughout the part. For some products, these variations may be unacceptable.
7. *Health and safety hazards*. Many metals, such as aluminum, titanium, magnesium, and iron, are pyrophoric—they can ignite or explode when in particle form with large surface/volume ratios. Fine particles can also remain airborne for long times and can be inhaled by workers. To minimize the health and safety hazards, the handling of metal powders frequently requires the use of inert atmospheres, dry boxes, and hoods, as well as special cleanliness of the working environment.

■ 18.17 PROCESS SUMMARY

For many years, powder metallurgy products carried the stigma of "low strength" or "inferior mechanical properties." This label was largely the result of comparisons where "identical" parts were made of the same material, but by various methods of manufacture. In essence, the size, shape, *and material* were all specified. In such a comparison, any product with 10 to 25% residual porosity would naturally be inferior to a fully dense product made by casting, forming, or machining processes. Unfortunately, it is this type of comparison that is frequently made when one considers converting an existing design or existing part to P/M manufacture.

A far more valid comparison can be obtained by specifying size, shape, *and desired mechanical properties*. Each process can then be optimized by the selection of *both* material and process conditions. Powder metallurgy can use its unique materials, such as iron–copper blends for which there are no cast or wrought equivalents. The P/M products can be designed to provide the targeted properties while containing the typical amounts of residual porosity. Since all products will then possess the targeted mechanical properties, process comparison can then be based on economic factors, such as total production cost. On this basis, powder metallurgy has emerged as a significant manufacturing process, and its products no longer carry the stigma of "inferior mechanical properties."

Table 18-6 summarizes some of the important manufacturing features of four powder processing methods. Note the variations in product size, production rate, production quantity, mechanical properties, and cost.

TABLE 18-6 Comparison of Four Powder Processing Methods

Characteristic	Conventional Press and Sinter	Metal Injection Molding (MIM)	Hot-Isostatic Pressing (HIP)	P/M Forging
Size of workpiece	Intermediate <5 pounds	Smallest <1/4 pounds	Largest 1–1000 pounds	Intermediate <5 pounds
Shape complexity	Good	Excellent	Very good	Good
Production rate	Excellent	Good	Poor	Excellent
Production quantity	>5000	>5000	1–1000	>10,000
Dimensional precision	Excellent ±0.001 in./in.	Good ±0.003 in./in.	Poor ±0.020 in./in.	Very good ±0.0015 in./in.
Density	Fair	Very good	Excellent	Excellent
Mechanical properties	80–90% of wrought	90–95% of wrought	Greater than wrought	Equal to wrought
Cost	Low $0.50–5.00/lb	Intermediate $1.00–10.00/lb	High >$100.00/lb	Somewhat low $1.00–5.00/lb

■ Key Words

amorphous
apparent density
atomization
binder
blending
burn-off
canning
coining
compaction
composites
compressibility
decanning
flow rate
gas atomization
green strength
hot-isostatic pressing (HIP)
impregnation
infiltration
isostatic compaction
liquid-phase sintering
lubricant
metal injection molding (MIM)
mixing
particle shape
particle size
permeability
P/M forging
porosity
powder injection molding (PIM)
powder metallurgy
prealloyed powder
pressure-assisted sintering
protective atmosphere
rapidly solidified powder
repressing
secondary operations
sinter brazing
sinter-HIP
sintering
size distribution
sizing
spray forming (Osprey process)
surface texture
vacuum sintering
warm compaction
water atomization

■ Review Questions

1. What type of product would be considered to be a prospect for powder metallurgy manufacture?
2. What were some of the earliest powder metallurgy products?
3. What are some of the primary market areas for P/M products?
4. Which metal family currently dominates the powder metallurgy market?
5. What are the four basic steps that are usually involved in making products by powder metallurgy?
6. What are some of the important properties and characteristics of metal powders to be used in powder metallurgy?
7. What is the most common method of producing metal powders?
8. What are some of the other techniques that can be employed to produce particulate material?
9. Which of the powder manufacturing processes are likely to be restricted to the production of elemental (unalloyed) metal particles?
10. What are some of the unique properties of amorphous metals?
11. Why is powder metallurgy a key process in producing products from amorphous or rapidly solidified material?
12. Why is flow rate an important powder characterization property?
13. What is apparent density, and how is it related to the final density of a P/M product?
14. What is green strength, and why is it important to the manufacture of high-quality P/M products?
15. How do the various powder properties relate to the method of powder manufacture?
16. What are some of the objectives of powder mixing or blending?
17. How does the addition of a lubricant affect compressibility? Green strength?
18. How might the use of a graphite lubricant be fundamentally different from the use of wax or stearates?
19. What types of composite materials can be produced through powder metallurgy?
20. What are some of the objectives of the compaction operation?
21. What limits the cross-sectional area of most P/M parts to several square inches or less?
22. Describe the movement of powder particles during compaction. What feature is responsible for the fact that powder does not flow and transmit pressure like a liquid?
23. For what conditions might a double-action pressing be more attractive than compaction with a single moving punch?

24. How is the density of a P/M product typically reported?
25. Why is it more difficult to compact a multiple-thickness part?
26. Describe the four classes of conventional powder metallurgy products.
27. What is isostatic compaction? For what product shapes might it be preferred?
28. What is the benefit of warm compaction?
29. What is a reasonable compacted density? How much residual porosity is still present?
30. What types of materials are used in compaction tooling?
31. How do the common sintering temperatures compare to material melting points?
32. What are the three stages associated with most P/M sintering operations?
33. Why is it necessary to raise the temperature of P/M compacts slowly to the temperature of sintering?
34. Why is a protective atmosphere required during sintering? During the cool-down period?
35. What types of atmospheres are used during sintering?
36. What are some of the changes that occur to the compact during sintering?
37. What is the purpose of the sinter brazing process?
38. The combined heating and pressing of powder would seem to be an improvement over separate operations. What features act as deterrents to this approach?
39. What are some of the attractive properties of hot-isostatic pressed products?
40. What is the attractive feature of the sinter-HIP and pressure-assisted sintering processes?
41. What are some of the other methods that can produce high-density P/M products?
42. Describe the spray-forming process and the unique feature that enables production of high-density, fine grain size products.
43. How is the injection molding of powdered material similar to the injection molding of plastic or polymeric products?
44. In the MIM process, what is done to enable metal powder to flow like a fluid under pressure?
45. How is the metal powder used in metal injection molding (MIM) different from the metal powder used in a conventional press-and-sinter production?
46. What are some of the ways that the binder can be removed from metal injection molded parts?
47. Why are MIM products injection molded to sizes that are considerably larger than the desired product?
48. For what types of parts is P/M injection molding an attractive manufacturing process?
49. How does the final density of a MIM product compare to a press-and-sinter P/M part?
50. What is the purpose of repressing, coining, or sizing operations?
51. Why can't we use the original compaction tooling to perform repressing?
52. What is the major difference between repressing and P/M forging?
53. What is the difference between impregnation and infiltration? How are they similar?
54. Why might different conditions be required for the heat treatment, machining, or surface treatment of a powder metallurgy product?
55. The properties of P/M products are strongly tied to density. Which properties show the strongest dependence?
56. How do the physical properties of P/M products vary with density?
57. What advice would you want to give to a person who is planning to convert the manufacture of a component from die casting to powder metallurgy?
58. What is the shape of an "ideal" powder metallurgy product?
59. What are some P/M products that have been intentionally designed to use the porosity or permeability features of the process?
60. Give an example of a product where two or more materials are mixed to produce a composite P/M product with a unique set of properties.
61. What are the most cited assets of the powder metallurgy method of parts manufacture?
62. Why is finish machining such an expensive component in parts manufacture?
63. Describe some of the materials that can be made into P/M parts that could not be used for processes such as casting and forming.
64. Why is P/M not attractive for parts with low production quantities?
65. What features of the P/M process often compensate for the higher cost of the starting material?
66. How might you respond to the criticism that P/M parts have inferior properties?

■ Problems

1. When specifying the starting material for casting processes, the primary variables are chemistry and purity. Any structural features of the starting material will be erased by the melting. For forming processes, the material remains in the solid state, so the principal concerns relating to the starting material are chemistry and purity, ductility, yield strength, strain-hardening characteristics, grain size, and so on. What are some of the characteristics that should be specified for the starting powder to assure the success of a powder metallurgy process? In what ways are these similar to or different from those mentioned for casting and forming processes?
2. In conventional powder metallurgy manufacture, the material is compacted with applied pressure at room temperature and then sintered by elevated temperature at atmospheric pressure. With P/M hot pressing, the loose powder is subjected to pressure while it is also at elevated temperature. It would appear, therefore, that hot pressing could produce a finished part in a single operation and would be a more economical and attractive manufacturing process. What features have been overlooked in this argument that would tend to favor the press-and-sinter sequence for conventional manufacture?
3. Investigate the method(s) used to produce tungsten incandescent lamp filaments. How does the method used today compare to the method developed by Coolidge in the late 1800s?

Chapter 18 CASE STUDY

Impeller for an Automobile Water Pump

The component pictured in the figure is the impeller of a water pump used by a major automotive manufacturer. The outer diameter of the component is 2.75 in., and the total height of the six curved vanes is 0.75 in. (with a tolerance of 0.005 in.). The diameter of the center hole is 0.625 in., and the flat base is 0.187 in. thick. Vibration and balance considerations require accurate positioning and uniform thickness of the six curved vanes. A relatively smooth surface finish is desirable for good fluid flow.

The maximum operating temperature has been estimated at 300°F, and the contact fluid should be a water/antifreeze mixture with corrosion-resistant additives. The designer has provided a target tensile strength of 30,000 psi and notes that a minimum amount of fracture resistance is also desirable. Since there should be no direct metal-to-metal rubbing, enhanced wear resistance does not appear to be necessary. This is a high-volume component, however, so low total cost (material plus manufacturing) would appear to be a prime objective.

Similar components have been sand cast from cast iron, with a grinding operation being required to maintain controlled height. The manufacturer is interested in improving quality and lowering cost.

1. Is a ferrous material needed to provide the desired properties, or might a nonferrous metal be acceptable?
2. What processes would you want to consider to mass-produce such a shape? Are there more attractive casting processes? Is this a candidate for metal forming, and if so, which process or processes? Is powder metallurgy a possibility for this product? If so, can the desired properties be achieved with the densities that are common for a traditional press-and-sinter operation?
3. Investigate the various material–process combinations that would be candidates for production. Select and defend your “best choice.”
4. Might this part be a candidate for manufacture from a nonmetal, such as molded nylon, some other polymer, or even some form of reinforced composite material? How would you suggest producing the desired shape if one or more of these materials were considered? Would you have to compromise on any of the performance requirements?

An automobile water pump impeller.

CHAPTER 19

ELECTRONIC ELECTROCHEMICAL CHEMICAL AND THERMAL MACHINING PROCESSES

19.1 INTRODUCTION

Many material removal processes have been developed since World War II to address problems that can't be handled with conventional "chip-forming" machining processes. The advantages of these processes [often called nontraditional machining (NTM)] are as follows:

- Complex geometries beyond simple planar or cylindrical features can be machined.
- Parts with extreme surface-finish and tight tolerance requirements can be obtained.
- Delicate components that cannot withstand large cutting forces can be machined.
- Parts can be machined without producing burrs or inducing residual stresses.
- Brittle materials or materials with very high hardness can be easily machined.
- Microelectronic or integrated circuits are possible to mass-produce.

NTM processes can often be divided into four groups based upon the material removal mechanism: See Table 19-1.

1. *Chemical*. Chemical reaction between a liquid reagent and the workpiece results in etching.
2. *Electrochemical*. An electrolytic reaction at the workpiece surface is responsible for material removal.
3. *Thermal*. High temperatures in very localized regions evaporate materials.
4. *Mechanical*. High-velocity abrasives or liquids remove material (see Chapter 27).

Machining processes that involve chip formation have a number of inherent limitations. Large amounts of energy are expended to produce unwanted chips that must be removed and discarded. Much of the machining energy ends up as undesirable heat that often produces problems of distortion and surface cracking. Cutting forces require that the workpiece be held, which can also lead to distortion. Unwanted distortion, residual stress, and burrs caused by the machining process often require further processing. Finally, some geometries are too delicate to machine, while others are too complex.

When examining these processes, be aware that conventional end milling (see Chapter 25) has these typical machining parameters:

- Feed rate—25 to 5000 mm/min (5 to 200 in./min)
- Surface finish—1.5 to 3.75 μm (60 to 150 μin) AA
- Dimensional accuracy—0.025 to 0.05 mm (0.001 to 0.002 in.)
- Workpiece/feature size—61 cm × 61 cm (25 in. × 24 in.); 2.5 cm (1 in.) deep

In comparison, NTM processes typically have lower feed rates and require more power consumption when compared to machining. However, some processes permit batch processing, which increases the overall throughput of these processes and enables them to compete with machining. A major advantage of some NTM processes is that feed rate is independent of the material being processed. As a result, these processes are often used for difficult-to-machine materials. NTM processes typically have better accuracy and surface finish, with the ability of some processes to machine larger feature sizes at lower capital costs. In most applications, NTM requires part-specific tooling, while general-purpose cutting and workholding tools make machining very flexible. There are numerous hybrid forms of all these processes, developed for special applications, but only the main NTM processes are described here due to space limitations.

■ 19.2 CHEMICAL MACHINING PROCESSES

CHEMICAL MACHINING

Chemical machining (CHM) is the simplest and oldest of the chipless machining processes. The use of CHM dates back 4500 years to the Egyptians, who used it to etch jewelry. In modern practice, it is applied to parts ranging from very small microelectronic circuits to very large engravings up to 15 m (50 ft) long. Typically metals are chemically machined, although methods do exist for etching ceramics and even glass.

In CHM, material is removed from a workpiece by selectively exposing it to a chemical reagent or etchant. The mechanism for metal removal is the chemical reaction between the etchant and the workpiece, resulting in dissolution of the workpiece. One means for accomplishing CHM is called *gel milling*, where the etchant is applied to the workpiece in gel form. However, the most common method of CHM involves covering selected areas of the workpiece with a *maskant* (or etch resist) and imparting the remaining exposed surfaces of the workpiece to the etchant. The general material removal steps for CHM are:

1. *Cleaning*. Contaminants on the surface of the workpiece are removed to prepare for application of the maskant and permit uniform etching. This may include degreasing, rinsing, and/or pickling.
2. *Masking*. If selective etching is desired, an etch-resistant maskant is applied and selected areas of the workpiece are exposed through the maskant in preparation for etching.
3. *Etching*. The part is either immersed in an etchant or an etchant is continuously sprayed onto the surface of the workpiece. The chemical reaction is halted by rinsing.
4. *Stripping*. The maskant is removed from the workpiece and the surface is cleaned and desmutted as necessary.

Lateral dimensions in CHM are controlled in large part by the patterned maskant. Masking can be performed in one of several ways depending on the level of precision required in CHM. The simplest method of applying a maskant is the *cut-and-peel* method. In this procedure the maskant material, typically neoprene, polyvinyl chloride, or polyethylene, is applied to the entire surface of the workpiece by dipping or spraying. Once the coating dries, it is then selectively removed in those areas where etching is desired by scribing the maskant with a knife and peeling away the unwanted portions. When volume permits, scribing templates may be used to improve accuracy. Cut-and-peel

TABLE 19-1 Summary of NTM Processes

Process	Typical Penetration or Feed Rate, Mm/m (ipm)	Typical Surface Finish AA, μm (μin.)	Typical Accuracy, Mm (in.)	Typical Workpiece or Feature Size, cm (in.)	Comments
Chemical					
Chemical milling (cut-and-peel)	0.013 to 0.076 (0.0005 to 0.003)	1.6 to 6.35; as low as 0.2 (63 to 250; 8)	greater than 0.127 (0.005)	as large as 365 × 1524 (144 × 600); up to 1.27 (0.5) thick	No burrs; no surface stresses; tooling cost low
Photochemical machining	as above	as above	0.025 to 0.05 (0.001 to 0.002)	30 × 30 (12 × 12); up to 0.15 (0.06) thick	Limited to thin material; burr-free blanking of brittle material; tooling cost low; used in microelectronics
Electrochemical					
Electrochemical machining (ECM)	2.5 to 12.7 (0.1–0.5)	0.4 to 1.6 (16–63)	0.013 to 0.13 (0.0005–0.005); 0.05 (0.002) in cavities	30 × 30 (12 × 12); 5 (2) deep	Stress-free, burr-free metal removal in hard-to-machine metals; tool design expensive; disposal of wastes a problem; MRR independent of hardness; deep cuts will have tapered walls
Electrostream drilling	1.5 to 3 (0.06–0.12)	0.25 to 1.6 (10–63)	0.025 (0.001) or 5% of hole dia.	up to 0.5 (0.2) thick	Charged high-velocity stream of electrolyte; hole diameters down to 0.127 mm (0.005 in.); 40:1-hole aspect ratios possible
Shaped-tube electrolytic machining (STEM)	as above	0.8 to 3.1 (32–125)	0.025 to 0.125 (0.001–.005)	routinely up to 127 (5) thick	Special form of ECM using conductive tube with insulated surface and acidic electrolyte; 300:1-hole aspect ratios; hole diameters down to 0.5 mm (0.02 in.)
Thermal					
Electrical discharge machining (EDM)	up to 0.5 (0.02)	0.8 to 2.7 (32–105)	0.013 to 0.05 (0.0005–.002)	up to 200 × 200 (79 × 79); 5 (2) deep	Widely used and disseminated; dies expensive; cuts any conductive material regardless of hardness; forms recast layer
Electron-beam machining (EBM)	30 to 1500 (1.2–60)	0.8 to 6.35 (32–250)	0.005 to 0.025 (0.0002–0.001)	0.025 to 0.63 (0.01–0.25) thick	Capable of micromachining thin materials; hole sizes down to 0.05 mm (0.002 in.); 100:1 hole aspect ratios; requires high vacuum
Laser-beam machining (LBM)	100 to 2500 (4–100)	0.8 to 6.35 (32–250)	0.013 to 0.13 (0.0005–0.005)	up to 2.5 (1) thick	Capable of drilling holes down to 0.127 mm (0.005 in.) at 20:1 aspect ratio in seconds; has heat-affected zone and recast layers which may require removal
Plasma arc cutting (PAC)	250 to 5000 (10–200)	0.6 to 12.7 (25–500)	0.5 to 3.2 (0.02–0.125)	up to 15 (6) thick	Clean rapid cuts and profiles in almost all plates; 5° to 10° taper; cheaper capital equipment
Precision PAC	as above	as above	0.25 (0.01)	up to 1.5 (0.625) thick	Special form of PAC limited to thin sheets of material; straighter, smaller kerf
Wire EDM	100 to 250 (4–10)	0.8 to 1.6; as low as 0.38 (32–64; 15)	0.0025 to 0.1 (0.0001–0.004)	as large as 100 × 160 (40 × 64); up to 45 (18) thick	Special form of EDM using traveling wire; cuts straight narrow kerfs; wire diameters as small as 0.05 mm (0.002 in.); CNC machines permit complex geometries
Mechanical—see Chapter 29 on Abrasive Machining					
Abrasive jet machining	76 (3)	0.25 to 1.27 (10–50)	0.12 (0.005)	up to 0.15 (0.06) thick	Used for cutting brittle materials; produces tapers; inexpensive to implement; can cut up to 6.3 mm (0.25 in.) thick glass
Abrasive waterjet machining	15 to 450 (0.6–18)	2.0 to 6.35 (80–250)	0.13 to 0.38 (0.005–0.015)	up to 20 (8) thick	Use in glass, titanium, composites, nonmetals, and heat-sensitive or brittle materials; produces tapered walls in deep cuts; no burrs

TABLE 19-1 Continued

Ultrasonic machining (impact grinding)	0.5 to 3.8 (0.02–.15)	0.4 to 1.6; as low as 0.15 (16–63; 6)	0.013 to 0.025 (0.0005–.001)	up to 100 cm^2 (16 in.^2)	Most effective in hard materials, $R_C > 40$; tool wear and taper limit hole aspect ratio at 2.5:1
Water-jet machining	250 to 200,000 (10–7900) soft materials	1.27 to 1.9 (50–100)	0.13 to 0.38 (0.005–0.015)	up to 2.5 (1) thick	Used on leather, plastics, and other nonmetals; pressures of 60,000 psi and jet velocity of up to 3000 ft/sec

coatings are thick, ranging from 0.025 to 0.13 mm (0.001 to 0.005 in.). Because of this thickness, the maskant can withstand exposure to the etchant for the extended periods of time necessary to remove large volumes of material. This technique is generally preferred when the workpiece is not flat or is very large or for low-volume work where the development of screens or phototools necessary for other masking methods is not justified. The scribe-and-peel method for *stepped machining* is shown in Figure 19-1.

Another method used to apply maskants is *screen printing*, involving the use of traditional silk-screening technology. The method applies the maskant through a mask made from a fine silk mesh or stainless steel screen. Masks are typically formed by application, exposure, and development of a light-sensitive emulsion on top of the screen. The screen is pressed against the surface of the workpiece and the maskant is rolled on. Screen printing is good for high-volume, low-precision applications with tolerances typically in the 0.05 to 0.18 mm (0.002 to 0.007 in.) range. Etch depth is limited to about 1.5 mm (0.06 in.) by the thickness of the maskant, typically on the order of 0.05 mm (0.002 in.).

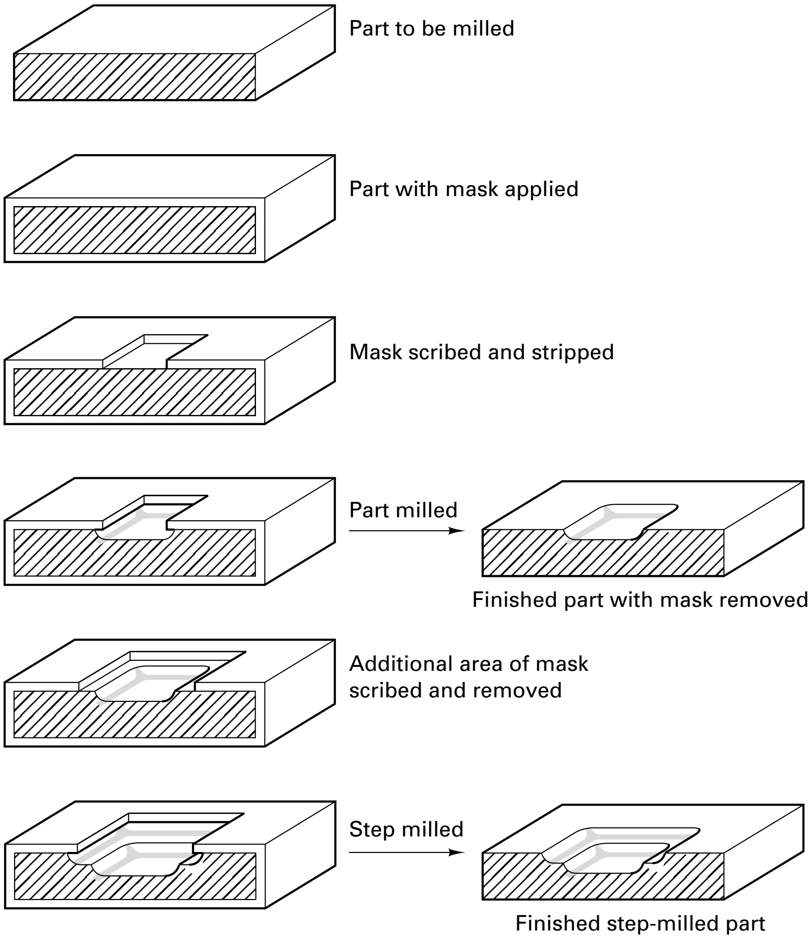

FIGURE 19-1 Steps required to produce a stepped contour by chemical machining.

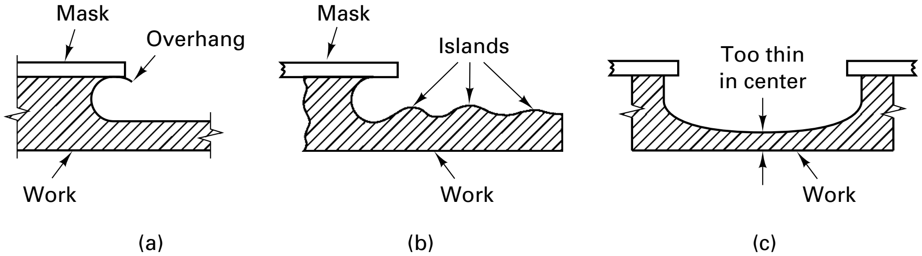

FIGURE 19-2 Typical chemical milling defects: (a) overhang: deep cuts with improper agitation; (b) islands: isolated high spots from dirt, residual maskant, or work material inhomogeneity; (c) dishing: thinning in center due to improper agitation or stacking of parts in tank.

Etch rates in CHM are very slow compared with other nontraditional machining processes. However, etching proceeds on all exposed surfaces simultaneously, which significantly increases the overall material removal rate on large parts. The etch rate in CHM is directly proportional to the etchant concentration directly adjacent to the area being machined. For parts machined by immersion, the uniformity of the etchant concentration within the bath can be improved by agitation. If the bath is not agitated properly, several defect conditions can result, as shown in Figure 19-2. *Islands*, or isolated high spots, can be the result of improper agitation on large parts. Islands can also be formed due to inadequate cleaning or inhomogeneity with the work material.

Single-sided, blind etching of the part is called *chemical milling* or, when the photoresist method of applying maskants is used, *photochemical milling*. Chemical milling is so named because its earliest use was for replacing mechanical milling on large components. Chemical milling is often used to remove weight on aircraft components, as shown in Figure 19-3. Through-etching of the workpiece is called *chemical* (or *photochemical*) *blanking*. The process competes with blanking, laser cutting, and electrical discharge machining (EDM) for through-cutting of thin material sheets. Chemical blanking is typically performed using double-sided etching to increase production rates and minimize taper on the etched walls of the feature. A key requirement for chemical blanking is registration of top-side and bottom-side screens or phototools during masking. Because of the precision required, chemical blanking is not performed with the cut-and-peel method of masking.

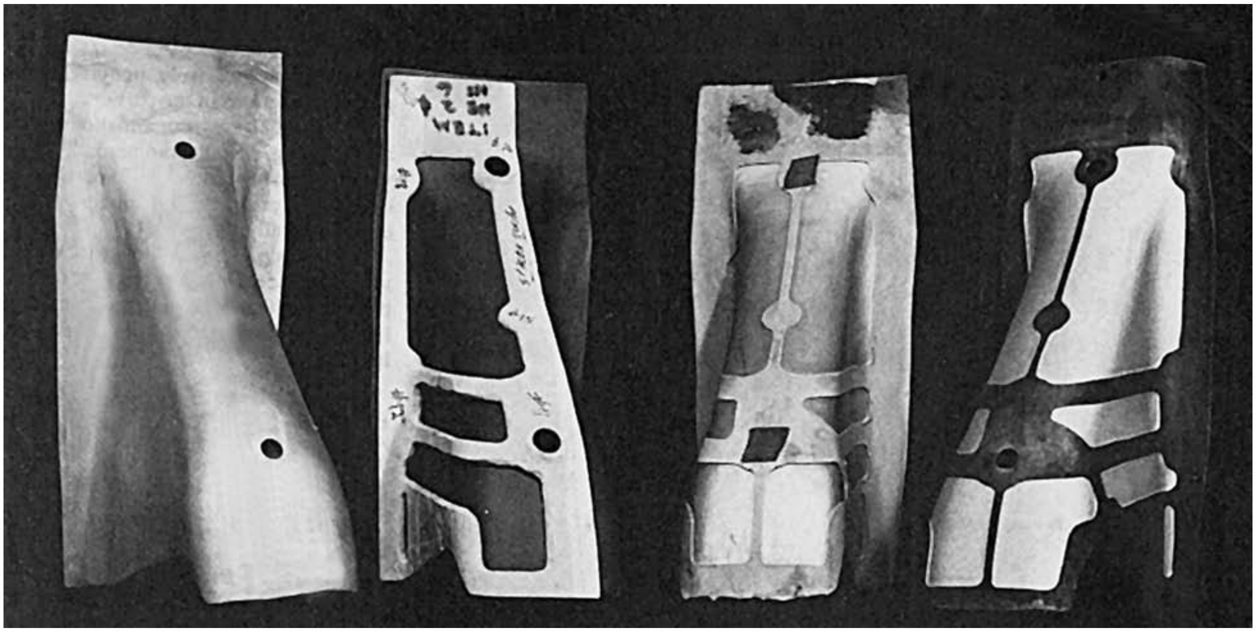

FIGURE 19-3 Iconel 718 aircraft engine parts. These sheet metal parts for a jet fighter engine are chemically milled to remove weight. (Left) As-formed workpiece; (middle left) workpiece coated with liquid rubber, fiberglass scribing template in place; (middle right) scribed workpiece; (right) finished part. About 0.035 in. of stock is removed from the 0.070-in.-thick workpieces. Tolerances are held to ±0.004 in.

Advantages and Disadvantages of Chemical Machining. Chemical machining has a number of distinct advantages when compared with other machining and forming processes. Except for the preparation of the artwork and phototool, screen or scribing template, the process is relatively simple, does not require highly skilled labor, induces no stress or cold working in the metal, and can be applied to almost any metal—aluminum, magnesium, titanium, and steel being the most common. Large areas can be machined; tanks for parts up to 12-by-50 ft and spray lines up to 10 ft wide are available. Machining can be done on parts of virtually any shape. Thin sections, such as honeycomb, can be machined because there are no mechanical forces involved.

The tolerances expected with CHM range from ±0.0005 in. on small etch depths up to ±0.004 in. in routine production involving substantial depths. Tolerances in chemical milling increase with the depth of the cut and with faster etch rates and vary for different materials. The surface finish is generally good to excellent for chemical polishing.

In using CHM, some disadvantages and limitations should be kept in mind. CHM requires the handling of dangerous chemicals and the disposal of potentially harmful byproducts, although some recycling of chemicals may be possible. The metal removal rate is slow in terms of the unit area exposed, being about 0.2 to 0.04 lb/min per square foot exposed in the case of steel. However, because large areas can be exposed all at once, the overall removal rate may compare favorably with other metal removal processes, particularly when the work material is not machinable or the workpiece is thin and fragile, unable to sustain large cutting forces.

Photochemical Machining. Figure 19-4 shows the specific steps that are involved when photochemical machining (PCM) is performed with the use of photoresists. These are as follows:

1. Clean the workpiece.
2. Coat the workpiece with a photoresist, usually by hot-roller lamination of dry-film photoresists, on both sides, although liquid photoresists may also be applied by dipping, flowing, rolling, or electrophoresis (i.e., migration of charged molecules in the presence of an electric field). For liquid photoresists, the coating is heated in an oven to remove solvents.
3. Prepare the artwork. A drawing of the workpiece is made on a computer-aided design (CAD) system.

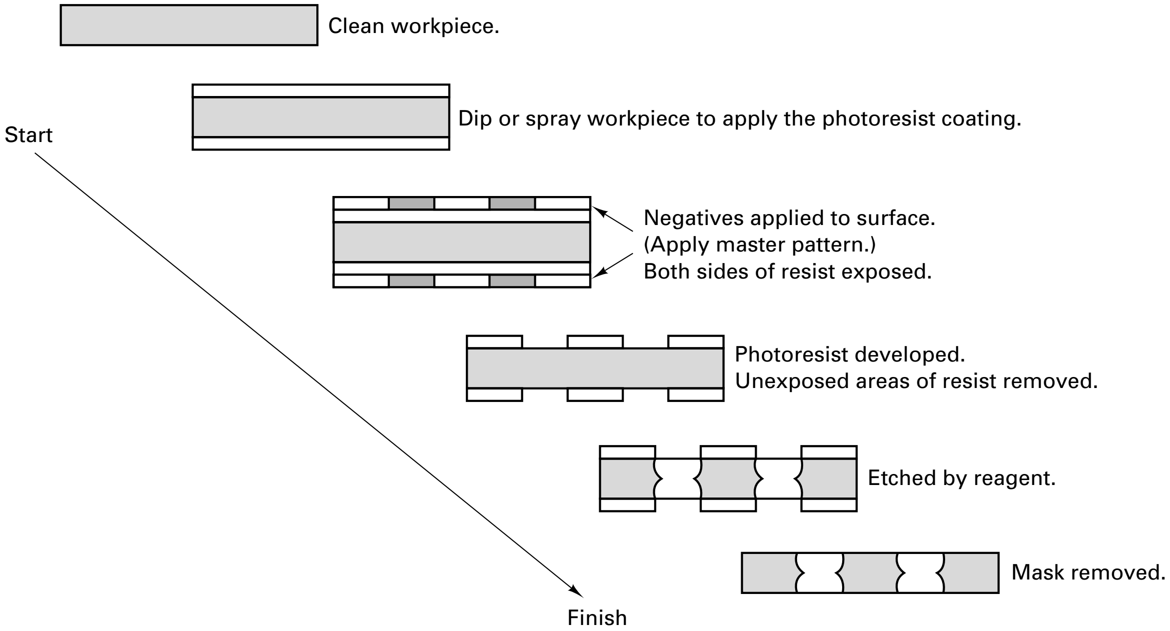

FIGURE 19-4 Basic steps in photochemical machining (PCM).

4. Develop the phototool. The CAD file is used to derive a photographic negative of the workpiece. Several methods may be used. Typically, the CAD drawing is downloaded to a laser-imaging system that exposes the desired image directly onto photographic (e.g., silver halide) film. In the past, oversized artwork was used to increase the accuracy of the phototool through photographic reduction of the artwork.
5. Expose the photoresist. Bring the phototool in contact with the workpiece, using a vacuum frame to ensure good contact, and expose the workpiece to intense ultraviolet (UV) light.
6. Develop the photoresist. Exposure of the photoresist to intense UV light alters the chemistry of the photoresist, making it more resistant to dissolution in certain solvents. By placing the exposed maskant in the proper solvent, the unexposed areas of the resist are removed, exposing the underlying material for etching. All residue is rinsed away.
7. Spray the workpiece with (or immerse it in) the reagent.
8. Remove the remaining maskant.

PCM has been widely used for the production of small, complex parts, such as printed circuit boards, and very thin parts that are too small or too thin to be blanked or milled by ordinary sheet metal forming or machining operations, respectively. Refinements to the PCM process are used in the microeletronics fabrication.

Design Factors in Chemical Machining. When designing parts that are to be made by chemical machining, several unique factors related to the process must be kept in mind. First, if artwork is used, dimensional variations can occur through size changes in the artwork or phototool film due to temperature and humidity changes. These can be controlled or eliminated by putting the artwork on thicker polyester films or glass, by controlling the temperature or humidity in the artwork and phototool production areas, or by using a direct-write laser-imaging system.

The second item that must be considered is the *etch factor*, sometimes referred to as *etch radius*, which describes the undercutting of the maskant. The etchant acts isotropically on whatever surface is exposed. Areas that are exposed longer will have more metal removed from them. Consequently, as the depth of the etch increases, there is a tendency to undercut or etch under the maskant (Figure 19-5). The etch factor, E, in chemical machining is defined as

$$E = \frac{U}{d} \tag{19-1}$$

where d is the depth of cut and U is the undercut as defined in Figure 19-5. In photochemical machining, the term *anisotropy* (sometimes referred to as etch factor) is used to describe the directionality of the cut. Anisotropy, A, of a material–etchant interaction in photochemical machining is defined as

$$A = \frac{d}{U} \tag{19-2}$$

which is the inverse of equation 19-1. In many electrical and electronic products, anisotropies much greater than 1 are desirable in order to permit greater densities of electrical and electronic components and wires.

An allowance for the etch factor must be taken into account in designing the part and the artwork or scribing template. In the case of chemical milling, the width of the opening in the maskant must be reduced by an amount sufficient to compensate for the undercut under both sides of the maskant:

$$W_m = W_f - (E \cdot d) \tag{19-3}$$

where W_f is the final desired width of the cut. This allowance is considered a minimum allowance; it has been found that results will vary based on etching conditions, and actual etch allowances will have to be somewhat greater and adapted to specific conditions.

In double-sided chemical blanking, a sharp edge remains along the line at which breakthrough occurs. Because such an edge is usually objectionable, etching ordinarily

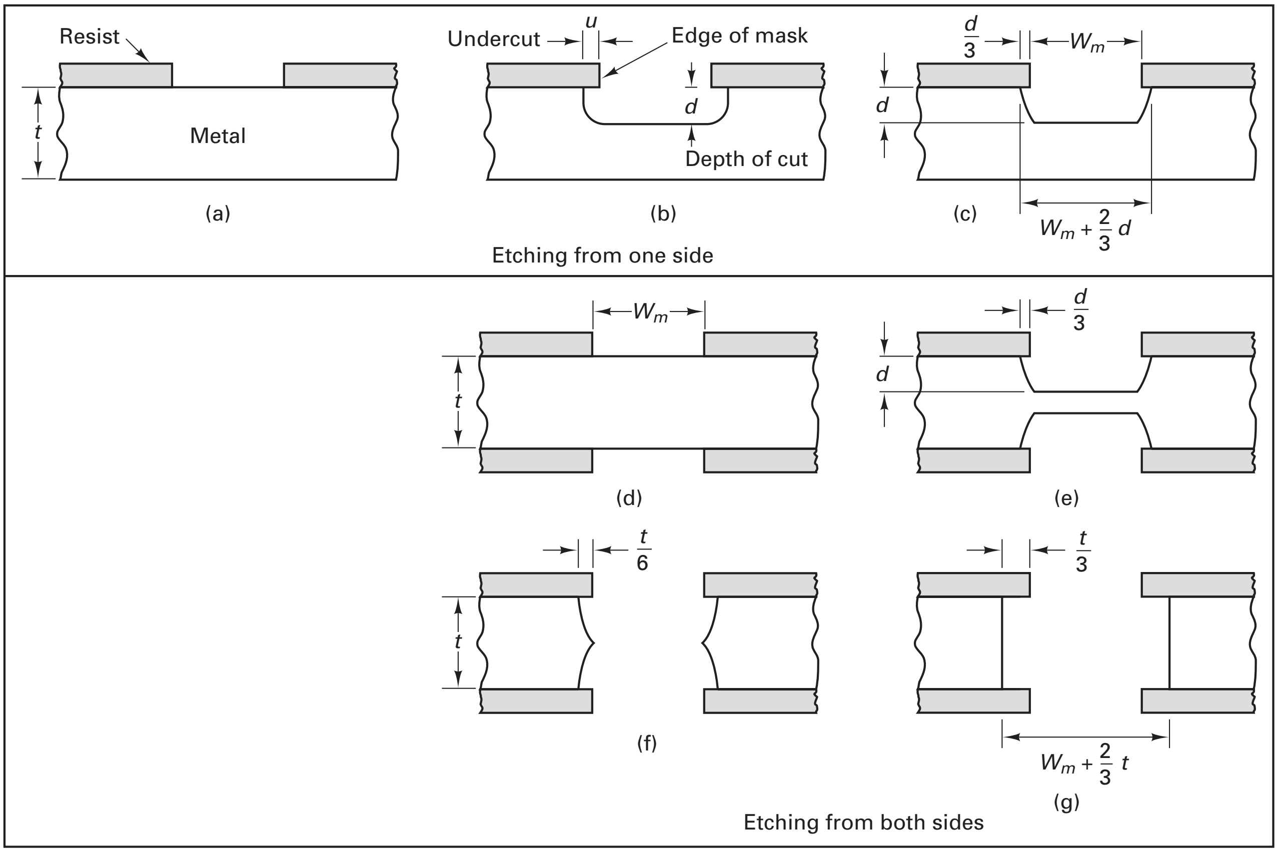

FIGURE 19-5 Undercutting of the mask or resist is defined by the etch factor, which must be accounted for in designing the part using the artwork on the scribing template.

is continued to produce nearly straight side walls, as shown in Figure 19-5g. In order to achieve nearly straight side walls, it is typical to allow the process to continue for the amount of time necessary to do a through-cut from one side.

The anisotropy of the cut defines the maximum limit for aspect ratio (i.e., ratio of depth to width) of the cut, which is a measure of how deep and narrow a cut can be made. In chemical blanking, by using a double-sided etch, the maximum aspect ratio of the cut may be effectively doubled if the process is stopped at breakthrough (Figure 19-5f). This is the effective maximum aspect ratio that may be achieved in CHM. Consequently, it is difficult to produce deep, narrow cuts in materials using CHM. Table 19-2 shows some etch rates and etch factors for common metal and etchant combinations in CHM.

TABLE 19-2 Etch Rates and Etch Factors for Some Common Metal–Etchant Combinations in CHM

Metal	Preferred Etchant	Penetration Rate (mm/mm)	Etch Factor E
Aluminum	$FeCl_3$	0.025	1.7 : 1
Copper	$FeCl_3$	0.05	2.7 : 1
Nickel alloys	$FeCl_3$	0.018	2.0 : 1
Phosphor-bronze	Chromic acid	0.013	2.0 : 1
Silver	$FeNO_3$	0.02	1.5 : 1
Titanium	HF	0.25	2.0 : 1
Tool steel	HNO_3	0.018	1.5 : 1

Source: G. F. Benedict, *Nontraditional Manufacturing Processes*, Marcel Dekker, New York, 1987, p. 200.

The soundness and homogeneity of the metal are very important. Wrought materials should be uniformly heat treated and stress relieved prior to processing. Although chemical machining induces no stresses, it may release existing residual stresses in the metal and thus cause warpage. Castings can be chemically machined provided that they are not porous and have uniform grain size. Lack of the latter can cause nonuniform etching rates, producing islands. Because of the different grain structures that exist near welds, weldments usually are not suitable for chemical machining. Preferential etching due to *intergranular attack* can also be an issue in CHM.

CHEMICAL-MECHANICAL POLISHING

Chemical-mechanical polishing (CMP), or chemo-mechanical polishing, uses the synergy of chemistry and mechanical grinding to obtain flatness on the order of 50 nm. CMP is used in the fabrication of integrated circuits (ICs) to obtain planar surfaces after dielectric and metal depositions during interconnection of circuit components. As shown in Figure 19-6, the process involves rotation of the wafer as it is pressed against a slurry-filled abrasive pad that rotates counter to the wafer. The slurry contains both a particle abrasive as well as an etchant and is deposited directly onto the abrasive pad by a mechanical arm. The wafer is held in a carrier by a backing pad designed to distribute the mechanical force evenly over the surface of the wafer. Fused silica in a weak KOH solution is a common slurry for oxide polishing. Ferricyanide-phosphate with silica or alumina is used to polish tungsten. Raised features are etched much faster than flat regions, since mechanical pressure concentrated on the raised features enhances etching. For dielectric polishing, typical etch rates are on the order of 300 nm/minute.

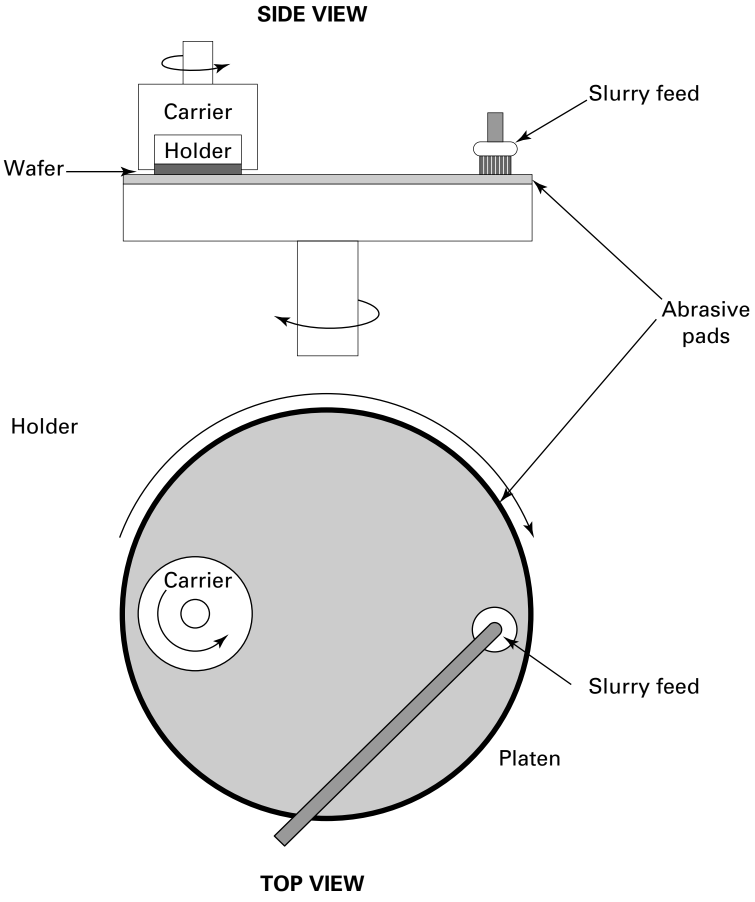

FIGURE 19-6 Schematic of chemical-mechanical polishing (CMP).

PHOTOCHEMICAL MACHINING FOR ELECTRONICS

The most common and most precise method for creating maskants involves the use of UV light-sensitive emulsions, called *photoresists*. In this method, photoresists are applied to the surface of the workpiece and selectively exposed to an intense ray of UV light through a photographic negative of the image to be patterned. The use of photoresists, called *photochemical machining*, is widely used in the manufacture of integrated circuits in electronics. The entire sequence of operations for the manufacture of electronics is given in Figure 1-13 in Chapter 1.

Integrated circuits use semiconductor materials—such as silicon, gallium arsenide, and germanium—that can be made to be either electrically conducting or electrically insulating by changing the type and concentration of impurity atoms found within the material. Like metals, all semiconductors have crystalline microstructures exhibiting long-range order in the form of a lattice. However, unlike metals, semiconductor atoms are characterized as having half-filled valence shells, and so, when placed into a lattice, the semiconductor atoms form covalent bonds

At room temperature (25°C), silicon permits a small amount of electrical conductivity that is too small for most electronic applications. The electrical conductivity of semiconductors can be altered by inserting impurity atoms into the semiconductor lattice. The process of modifying the electrical properties of semiconductors by introducing impurity atoms is commonly referred to as *doping*.

The first level of electronic manufacturing involves the manufacture of the ICs or chips. This is a complex process involving many steps, the sequence of which depends on the particular electrical device. The initial steps of doping by diffusion or ion implantation and oxidation are performed in large machines that manipulate the wafers in and out of various vacuum chambers in the correct sequence and duration.

Doping can be accomplished in bulk by alloying at the time of crystal formation. However, selective doping is required for IC production. Selective doping in most early IC devices involved thermal diffusion; more recently, as device dimensions have continued to shrink, ion implantation has become more suitable to better control the depth and concentration of the dopant atoms in the silicon wafer.

Silicon is the most widely used semiconductor material. It is plentiful and can be readily produced in single-crystal form; see Figure 19-7 for details. Also, the native oxide, silicon dioxide, can be used as both a dieletric layer and a diffusion mask during processing.

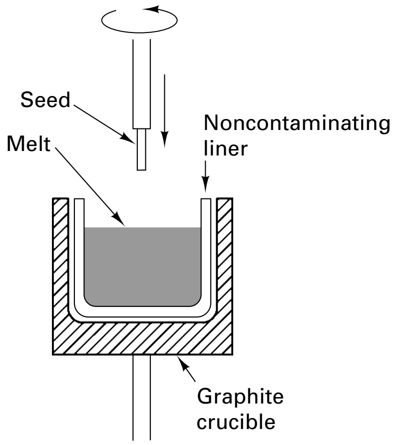

(a) Seed being lowered down to melt

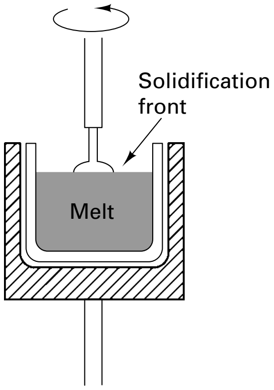

(b) Seed dipped in melt; freezing on seed just beginning

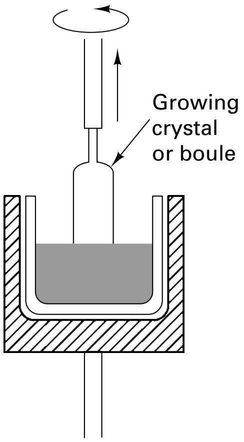

(c) Partially grown crystal slowly being withdrawn from melt

FIGURE 19-7 How the silicon wafer is made.

One of the key reasons that single crystal silicon is the most widely used semiconductor material is that it can be refined and grown economically in single-crystal form. Here's how it is done. Under equilibrium conditions, molten silicon, when cooled, produces a polycrystalline structure. However, under controlled conditions, silicon can be grown from a single seed in a large single-crystal ingot called a *boule*. The technique used most often for growing single-crystal silicon is called the *Czochralski method*. In the Czochralski method, a small *seed crystal* is lowered into molten silicon and raised slowly, allowing the crystal to grow from the seed. The size of the seed crystal is about 0.5 cm diameter by 10 cm long. Its crystallographic orientation is critical because it defines the crystallographic orientation of the boule which controls the electrical properties within the boule. The melt consists of electronic grade (99.999999999% pure) polycrystalline silicon (polysilicon). If desirable, dopant may be added to the melt, although alloying complicates the crystal growth process. The silicon is melted in a fused silica crucible within a furnace chamber backfilled with an inert gas such as argon. The crucible is heated to approximately 1500°C and maintained at slightly above the melting point with a graphite resistance heater.

Once grown, the boule is characterized for resistivity and crystallographic defects. The unusable end portions of the boule are cut off, and the outside of the body is ground into a cylindrical ingot. For diameters below 300 mm, *flats* are ground along the length of the ingot to identify the crystallographic orientation and the boule is sliced into wafers using wire or diamond saws. The wafers are lapped, chemical etched, and polished, ready for IC production.

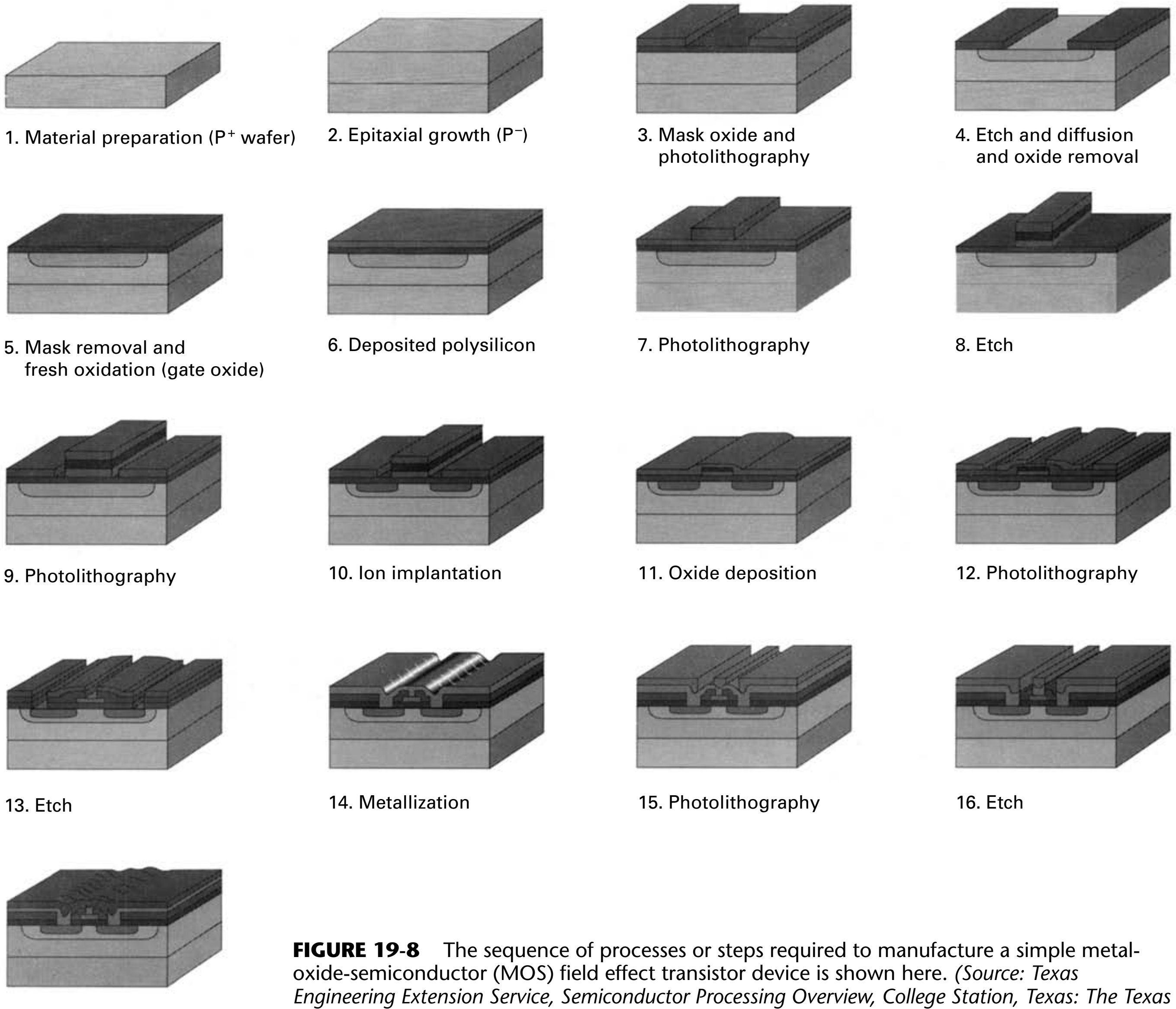

1. Material preparation (P^+ wafer)
2. Epitaxial growth (P^-)
3. Mask oxide and photolithography
4. Etch and diffusion and oxide removal
5. Mask removal and fresh oxidation (gate oxide)
6. Deposited polysilicon
7. Photolithography
8. Etch
9. Photolithography
10. Ion implantation
11. Oxide deposition
12. Photolithography
13. Etch
14. Metallization
15. Photolithography
16. Etch
17. Final overcoat

FIGURE 19-8 The sequence of processes or steps required to manufacture a simple metal-oxide-semiconductor (MOS) field effect transistor device is shown here. *(Source: Texas Engineering Extension Service, Semiconductor Processing Overview, College Station, Texas: The Texas A&M University System, 1996.)*

HOW ICs ARE MADE

The ability to selectively modify the electrical properties of semiconductors is the backbone of microelectronic manufacturing.

As shown in Figure 19-8, the manufacturing fabrication sequence for making a simple bipolar diode has many steps, beginning with the production of a silicon wafer from a predoped, single-crystal ingot (*boule*) that is cut into wafers, lapped, and polished to produce silicon wafers. The wafers are placed in vacuum chambers, where an oxide layer is grown on the surface of the wafer to act as a mask during subsequent doping of the substrate. The oxide layer is patterned using photolithography in combination with etching (see Figure 19-9). Photolithography is used to produce a polymeric mask over the oxide layer, which will allow only select areas of the oxide layer to be etched. After etching (chemical machining), the polymeric mask is removed from the silicon dioxide layer, and the silicon is doped (by diffusion) with boron. After doping, the silicon dioxide mask is removed, and a second silicon dioxide layer is grown and patterned to establish openings in the silicon dioxide layer above the doped regions. Next, a thin metal film is deposited on top of the silicon dioxide to provide an electrical pathway allowing the positive and

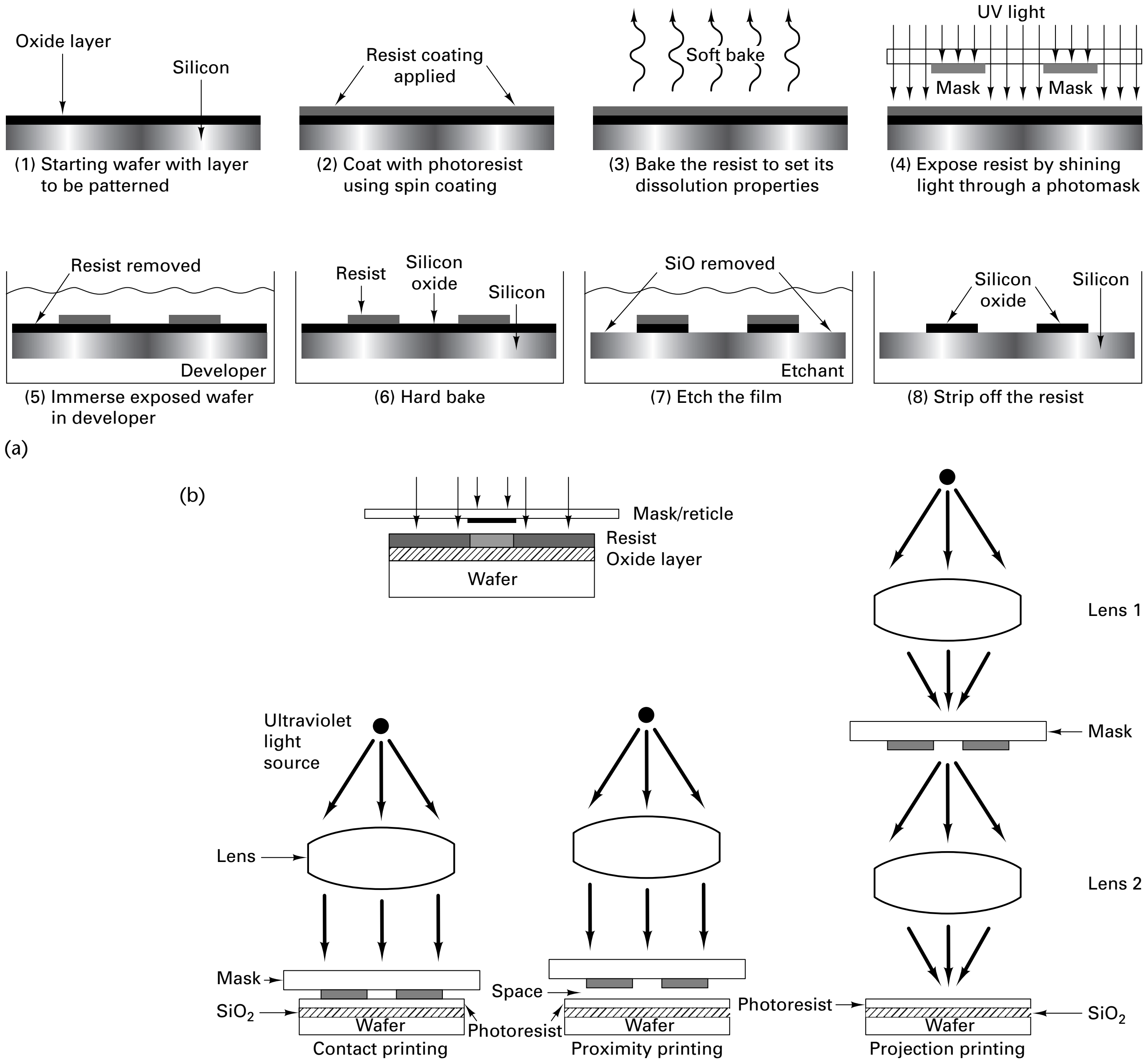

FIGURE 19-9 (a) The photolithography process itself has multiple steps, and each step can have variation, as shown in (b), the exposure step (4) in part (a).

negative electron regions of the diode to be connected to an external power supply. Photolithography and etching are used once again to pattern the thin film into leads and contact pads large enough for biasing the device. To protect the final integrated device from mechanical damage and moisture, a final passivation coating is added.

This example shows the production of a single IC component. Typically, multiple components and, further, multiple circuits are produced in parallel during IC fabrication. Over the years IC fabrication has evolved from the original small-scale integration (SSI) architecture of the 1960s, with 2 to 50 electronic components per circuit, to the ultra-large-scale integration (ULSI) architectures of today, with tens of millions of components per circuit. The classification of ICs by scale of integration represents the successive advancement of semiconductor processing technologies to provide lower-cost, higher-performance ICs. Each increase in the number of components represented a breakthrough in miniaturization technology (e.g., photolithography and clean rooms) that permitted the fabrication of smaller IC components with improved performance. To achieve lower cost, manufacturing processing technology breakthroughs were needed to make miniaturization technologies possible and economical. Today this trend of seeking higher performance at lower cost continues.

The photolithography process involves the sequence of steps shown in Figure 19-9. First, a liquid photoresist is applied to the surface of the silicon oxide layer over the silicon wafer. Typically, this is done with a process known as *spin coating*. In spin coating, centrifugal forces are used to produce a photoresist layer of uniform thickness. Next, the coated wafer is *soft baked* on a hot plate or in an oven. In this step, solvents used to reduce the viscosity of the photoresist during spin coating are evaporated, and adhesion between the wafer and the photoresist is improved. After soft bake, the photoresist is *exposed*, using a photomask to transmit a pattern of electromagnetic radiation onto the surface of the photoresist. This step is performed using a machine called a *stepper*, because the lithographic pattern of the device is indexed or stepped across the wafer, subjecting it to repeated exposures—one for each chip being made. Once the resist has been exposed, the wafer is *developed* in a chemical solvent. Development chemically machines unwanted resist materials, exposing the underlying material to be etched. Next, the resist is *hard baked* to remove any remaining solvents after development and to further toughen the remaining resist against downstream etching or implantation processes. Hard bakes generally take longer and are done at slightly higher temperatures than soft bakes. Once the downstream etching or implantation has made use of the resist, a photoresist *stripping* step is necessary for removal of the resist.

Obviously, the most important requirement of the photoresist is that it resist the downstream etching or implantation process. Other requirements important to the function of resists are their *resolution* and *sensitivity*. Resolution refers to the smallest linewidth that can be reproduced repeatably by the resist. The resolution of the resist is strongly a function of the source of ionizing radiation or the exposure machine tool used. Sensitivity refers to the amount of ionizing energy required to modify the solubility of the resist.

IC MANUFACTURING AND ECONOMICS

By the start of the year 2000, ICs with over 10 million transistors had been produced. While it is true that small circuits are inexpensive, the cost of packaging, testing, and assembling the completed circuits into an electronic system must be taken into account. Once the ICs are separated into individual chips, each chip must be handled individually. Thus packaging and testing costs often dominate the other production costs in the fabrication of ICs.

One way to improve the economics of microelectronic manufacturing is to increase wafer sizes. The key benefit from processing larger wafers is an increase in the percentage of usable area. Larger wafers have a smaller proportion of the area being affected by edge losses and wafer dicing. Since the mid-1980s, wafer diameters have increased threefold from 100 mm to 300 mm, which required the development of new equipment throughout the semiconductor manufacturing process. A second strategy for improving semiconductor economics involved increasing the number of chips per wafer by decreasing IC dimensions. IC dimensions have decreased more than 50-fold in the past 30 years. The smallest feature size in 1971 was 10 microns. By 2001, transistors with gate features as small as 0.18 micron were made. Again, the catalyst for this improvement was an investment in the process technology—in particular, photolithography.

Die yield improvement is another more desirable way to improve economics without making large capital investments. The die yield depends on the wafer yield (the fraction of silicon wafers that started versus those that finished the process), which involves the processing yield (the fraction of good dies per wafer), the assembly yield (the fraction of dies that are packaged), and the burn-in yield (the fraction of packaged dies that survive wafer testing). A single, submicron dust particle trapped between the photoresist and reticle in a photolithographic step can cause a point defect that will result in the malfunction of an entire IC. As a result, all microelectronic manufacturing is conducted in *clean rooms*, where special clothing must be worn (to prevent contamination of wafers by dust particles). The air is continuously filtered and recirculated using high-efficiency particulate-arresting filters to keep the dust level at a minimum. Wafers are commonly processed in Class 100 clean rooms.

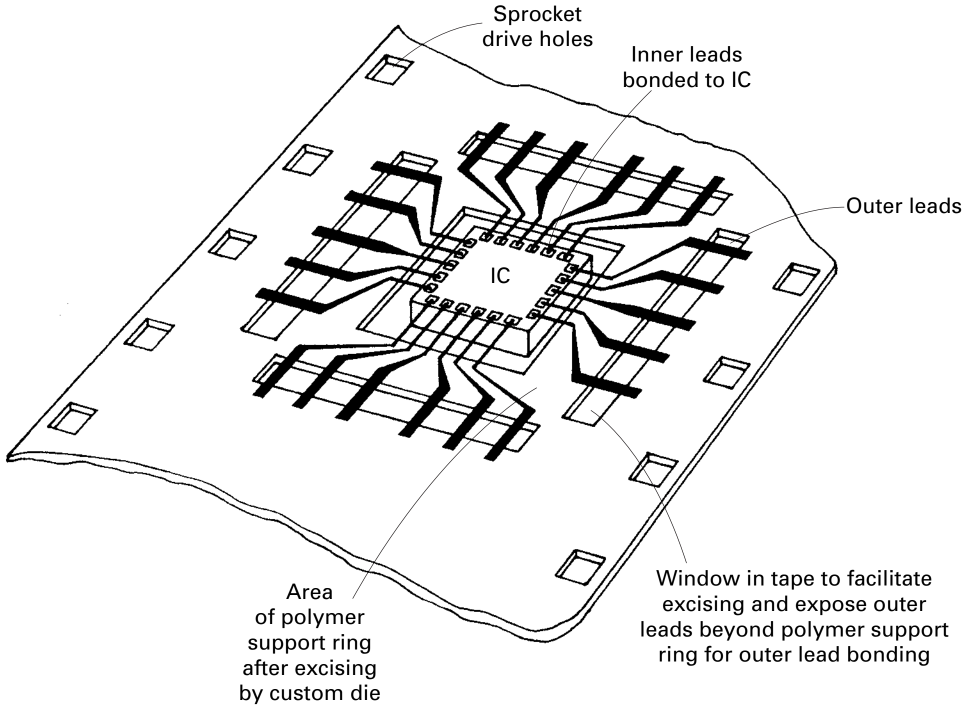

FIGURE 19-10 Tape-automated bonding (TAB) uses a polymer tape to carry the leads to the chip for bonding. *(Source: Jaeger, R. C.,* Introduction to Microelectronic Fabrication *(*Modular Series on Solid State Device, *Volume 5), New York: Addison-Wesley, 1990.)*

IC PACKAGING

Several levels of packaging and assembly are necessary to integrate the IC chip with other electronic devices to make it part of a fully functional commercial or military product. IC packaging serves to distribute electronic signals and power as well as provide mechanical interfacing to test equipment and printed circuit boards (PCBs). In addition to this interconnection role, IC packages protect the delicate circuitry from mechanical stresses and electrostatic discharge during handling and in corrosive environments during its operational life. Finally, because of the high density of the integrated circuits, dissipation of heat generated in the circuits has become more critical.

The first step in IC packaging is to attach the chip to the die using various techniques, including *wire bonding*, *tape-automated bonding* (TAB), and *flip-chip* technology. In wire bonding, also known as *chip-and-wire attachment*, the chip is attached to the tape with an adhesive, and wires are attached to bonding pads on the chip. See Figure 19-10. Gold wire as thin as 25 microns and aluminum wire as thin as 50 microns can be attached to the chip, and the other ends of the wires then become the leads on a die, so the die can not get packaged, as shown in Figure 19-11.

IC chips are mounted on a variety of packages made from a variety of materials. Figure 19-11 shows a cutaway view of the most well-known IC chip package; the dual in-line package (DIP) refers to the two sets of in-line pins that go into holes in the PCB.

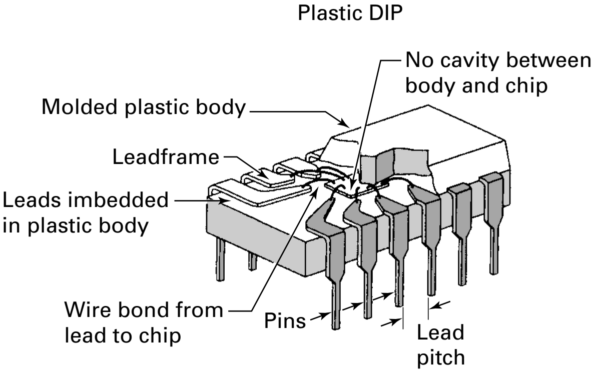

FIGURE 19-11 The dual in-line package (DIP) has a leadframe and package body. The leads on the chips are connected to the pins on the DIP. *(Source: Seraphim, D. P., Lasky, R. C., and Li, C.-Y.,* Principles of Electronic Packaging, *New York: McGraw-Hill, 1989.)*

The DIP, like all other IC packages, is made up of a leadframe and a package body. Typically composed of a copper alloy (sometimes with an aluminum coating), the leadframe provides electrical interface between the IC and the PCB. The DIP body is made from a low-cost epoxy, which facilitates mass production. In high-reliability applications (e.g., military), where hermetic (airtight) sealing of the package is important, ceramic package bodies are used.

Generally, IC packages are grouped mainly based on the arrangement, shape, and quantity of leads. *Lead pitch* refers to the center-to-center distance between leads on an IC package. In conformance to standard-setting bodies, such as the Electronics Industries Association (EIA) in the United States and EIA Japan, lead pitches above 20 mils (0.02 in.) are measured in inches. Below 20 mils, lead pitches are measured in millimeters.

There are two methods by which components are connected to the circuit on the PCB. The DIP is the leading example of *through-hole* (TH) technology, also known as *pin-in-hole* (PIH) technology, where IC packages and discrete components are inserted into metal-plated holes in the PCB and soldered from the underside of the PCB. In *surface mount* (SM) technology, electronic components are placed onto solder paste pads that have been dispensed onto the surface of the PCB. Figure 19-12 shows the cross section of solder joints for typical SM- and TH-packaged components on a PCB.

SM packages are more cost-effective in electronic assembly, and this SM technology has replaced a lot of the TH technology, but not entirely, since not all electronic components can be purchased in an SM package. SM packages are designed for automated production and allow for higher circuit board density than TH components. The manufacturing challenges associated with SM technology include weaker joint strength and solderabilty issues relating to lower in process lead temperatures. Also, TH components have only one lead geometry, whereas SM components have many different designs. The key packaging families for TH technology are dual in-line packages (DIPs) and *pin grid arrays* (PGAs).

In SM technology, IC packages cannot be discussed separately from lead geometry. Lead geometries affect the electrical performance, size constraints on the PCB, and ease of assembly of the IC package. The most basic form of SM lead is the *butt lead*, or *J-lead*. (See Figure 19-12.) Butt leads are normally formed by clipping the leads on TH components. This technique is sometimes used to convert an existing TH component to an SM component. Consequently, butt-leaded components do not typically save any space on the PCB. However, they can reduce costs by eliminating the need to perform TH soldering of the PCB after SM soldering. Butt-lead components tend to result in the lowest solder joint strengths, and therefore reliability is an issue.

Gull wing leads bend down and out, whereas *J-leads* bend down and in. Gull wing leads allow for thinner package sizes and smaller leads, which is important for compact applications such as laptop computers. In addition, packages with gull wing leads are compatible with most reflow soldering processes and have the ability to self-align during reflow if they are slightly misoriented. Gull wing leads are compatible with fine-pitch packages, but inspection of solder joints is difficult in the final soldered configuration. Gull wing leads are also susceptibile to lead damage and deviation from lead coplanarity. J-leads are sturdier than gull wings and stand up better in handling. The solder joint of J-leads face out, making inspection easier. J-leads have a higher profile than gull wings, which can be a disadvantage for compact applications. At the same time, this higher standoff makes postsolder cleaning easier. J-leads can be used for packages with between 20 and 84 leads.

Solder balls are increasingly being used to provide SM interconnection through *ball grid arrays* (BGAs). Figure 19-12 shows a BGA package. BGAs provide high lead density because the solder balls are arrayed across the entire bottom surface of the package. Lead counts on BGAs can go as high as 2400, with most in the 200 to 500 lead range. Because of their arrayed nature, BGAs do not need as fine a pitch (40 to 50 mils) as *quad flat packages* (QFPs), which can help in electronic assembly yields. To further boost yield, the solder balls on BGAs have excellent self-aligning capability during reflow and require less

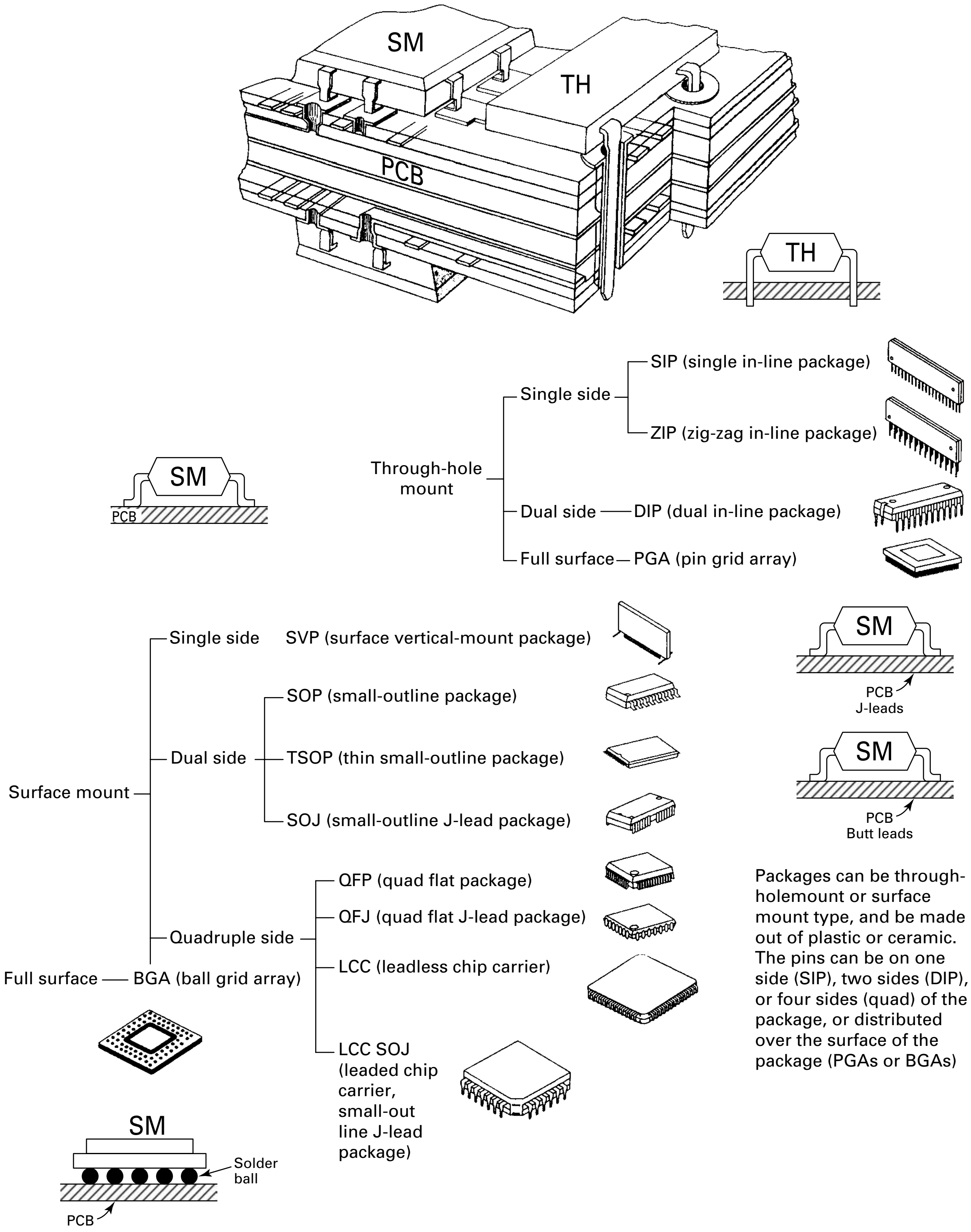

FIGURE 19-12 Here is a summary of the various types of packaging used for ICs. *(Source: Manzione, L. T.,* Plastic Packaging of Microelectronic Devices, *New York: Van Nostrand Reinhold, 1990.)*

coplanarity (6 to 8 mils) than other leads. The downside of BGAs is the difficulty associated with cleaning, inspection, and rework of solder joints and the lack of compatibility with some reflow methods, since joints are out of sight beneath the package.

The next level of electronic manufacturing involves populating the PCBs with ICs and other devices using the surface mount or through-hole techniques. See Figure 19-13 for a brief description of the PCB fabrication process.

PCBs can be single sided, double sided, or multilayer. Single-sided PCBs simply have metallic circuits on one side of the laminate. Through-hole, single-sided PCBs have insertion holes that extend through the board to the other side, where TH components may be inserted into the board (Figure 19-14). Surface mount components are simply mounted onto the pads on the same side as the circuit and do not require through-holes. Double-sided PCBs are used in cases where circuits must "jump," or cross over, one another. In this case, *via holes* (or simply *vias*) are needed to route the circuits over one another. Vias are essentially metal-filled holes through the laminate material that connect a circuit on one side to the other. The metal inside of the via is electroplated. Vias that are also used as insertion holes are called plated through-holes (PTHs). As the number of packaged components on the board increases, the complexity of the circuits increases, giving rise to the need for multilayer PCBs in which multiple single- and double-sided boards are laminated together using prepreg. Vias that pass from an outermost track on one side of the board to the outermost track on the other side are called *through vias*. Vias within a laminate core on the inside of a multilayer PCB are called *buried vias*. Vias that come out on only one side of a multilayer PCB are called *blind or partially buried vias*. Multilayer PCBs can have as many as 20 layers, although 4 to 8 are more common.

ELECTRONIC ASSEMBLY

The term *electronic assembly* is generally reserved for the third level of electronics manufacturing involving the soldering of packaged ICs and other discrete components onto PCBs using either through-hole and/or surface mount. As explained in the section on IC packaging, TH technology refers to the insertion of packaged leads into plated through-holes in the PCB and soldering of the terminals from the backside. SM technology involves temporary attachment of components to the surface of the PCB via a flux-containing solder paste, which is reflowed within an oven. SM components are much smaller and have much different leads. Passive (non-IC) SM components have terminations rather than leads that permit better shock and vibration resistance as well as reduced inductance and capacitance losses.

The sequence of operations for SM and TH assembly is shown in Figure 19-15. Insertion can be performed either manually or with automatic insertion machines. After insertion, leads are generally clinched and trimmed if necessary to avoid *bridging* between joints during soldering, which can cause electrical shorting of the circuit. Generally, soldering of TH components is performed automatically through a process known as *wave soldering*. Wave soldering involves the conveyance of a preheated and prefluxed

FIGURE 19-13 How printed circuit boards are made. The *printed circuit board* (PCB), or printed wiring board, connects the IC with other components to produce a functional circuit. Specifically, a PCB is a laminated set of dielectric layers or laminates of bulk sheet materials that have metallic circuits that are used to interconnect the various packaged components. As shown on the left, each PCB laminate has a base, tracks, and pads. The base material must be electrically insulating to provide support to all components making up the circuit. Pads on the laminate are connected by conductive tracks or traces (usually copper) that have been deposited onto the surface of the base. The metal for traces and pads is deposited by electroless plating and electroplating. Surface mount (SM) components are connected to the PCB at pads (lands) or, in the case of throughhole (TH) technology, at insertion holes.

Typical base materials used may be epoxy-impregnated fiberglass, polyimide, or ceramic. Epoxy-impregnated fiberglass is the cheapest substrate for interconnecting leaded packages. Fiberglass is used to increase the mechanical stiffness of the device for handling, while epoxy resin imparts better ductility. The fiberglass is impregnated on a continuous line where resin infiltrates the fiberglass mat in a dip basin, and the soaked fabric passes through a set of rollers to control thickness and an oven where the resin is partially cured. The resulting glass resin sheet is called *prepreg*. Multiple prepregs are then pressed together between electroformed copper foil under precise heat and pressure conditions to form a copper-clad laminate or PCB.

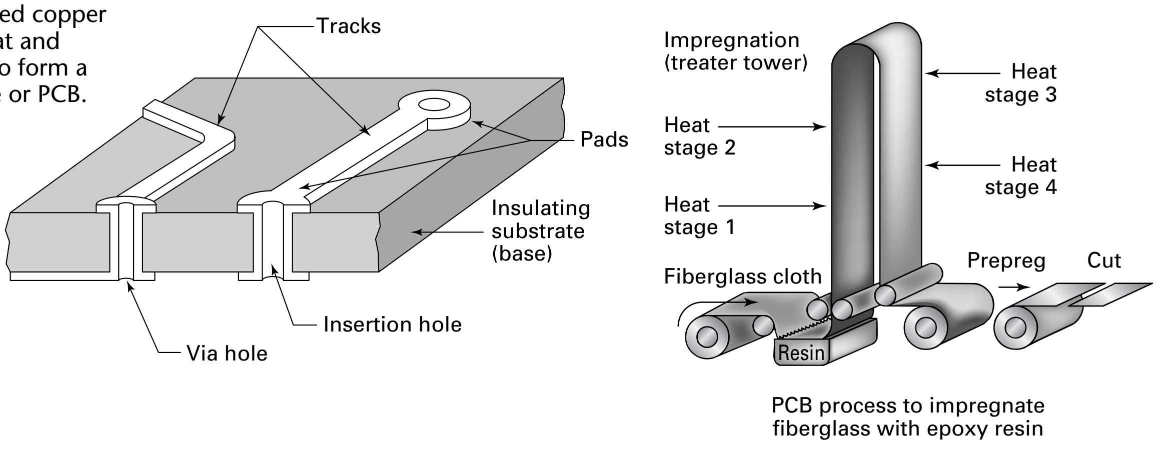

PCB process to impregnate fiberglass with epoxy resin

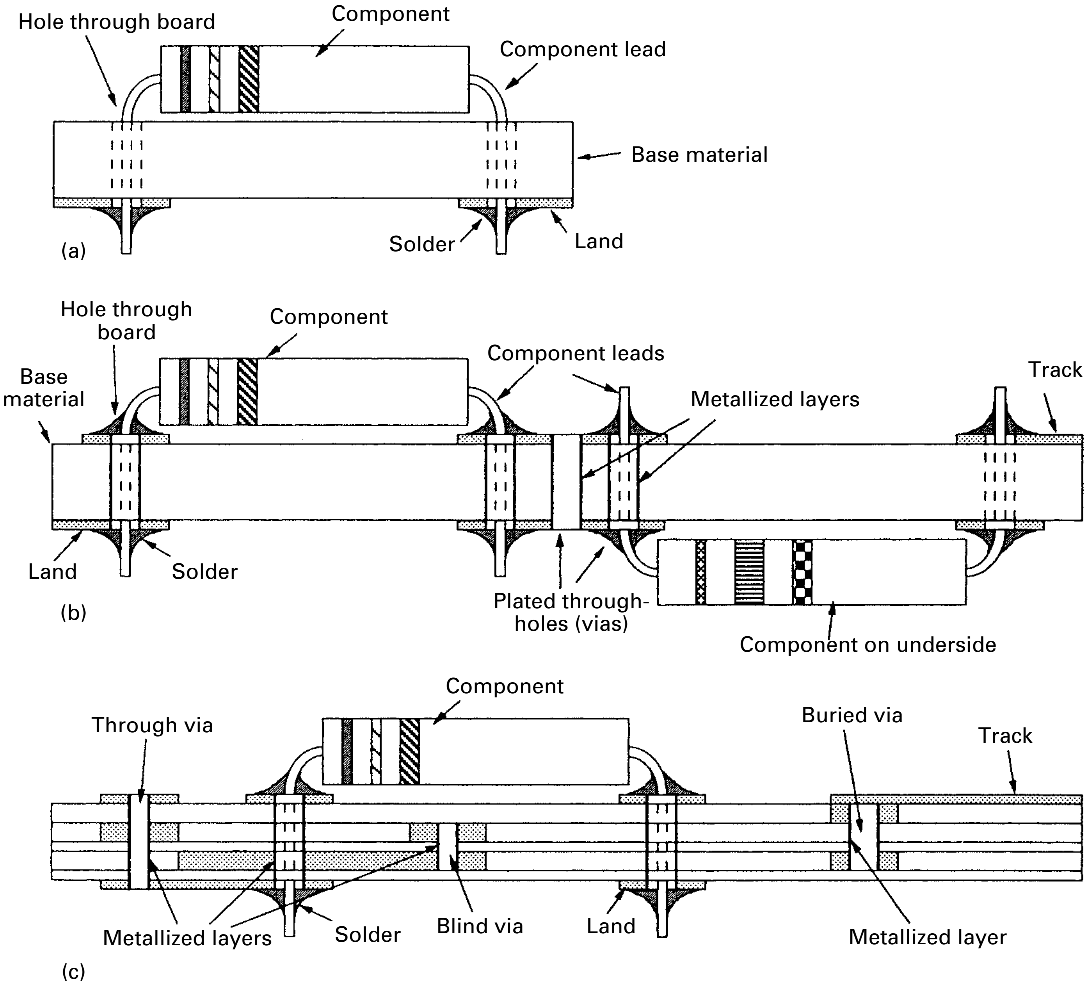

FIGURE 19-14 PCBs can be single sided, double sided, or multilayer. *(Source: Judd, M., and Brindley, K.,* Soldering in Electronics Assembly, *Boston: Reed International Books, 1992.)*

PCB over a standing wave of solder created by pumping action. The combination of capillary action and pumping action permits flow of the solder from the underside of the board into the joint. Cleanliness of the PCB is critical for wetting of the lead and PTH. A high-pressure air jet is used to blow off excess solder from the underside of the board to prevent solder bridging. Postsolder cleaning of the board includes degreasing and defluxing.

One key consideration for TH solder joints is joint strength. The trade-off is the clearance between the insertion lead and insertion hole. As the clearance decreases, joint strength increases. However, with smaller clearances it is more difficult to insert pins in holes. Clearances on the order of 0.25 mm are typical. Another factor affecting joint strength involves the *clinching* of leads. Clinched lead joints are much stronger than unclinched joints. Because the mechanical strength of TH joints is generally superior to SM joints, large, heavy components are generally attached with TH technology.

SM assembly involves application of solder paste to the lands on the surface of the PCB, placement of SM components on top of this paste, and reflow of the solder paste within an oven. Solder paste consists of small spherical particles of solder less than a tenth of a millimeter in diameter together with flux and solvents used to dissolve the flux (imparting tackiness) and thicken the paste. At the time of application, the paste has the consistency of peanut butter and is applied by screening, stenciling, or dispensing. In screening and stenciling, a solder paste printer is used to apply solder paste through a mask (screen or stencil) by running a squeegee over the surface of the mask. The mask

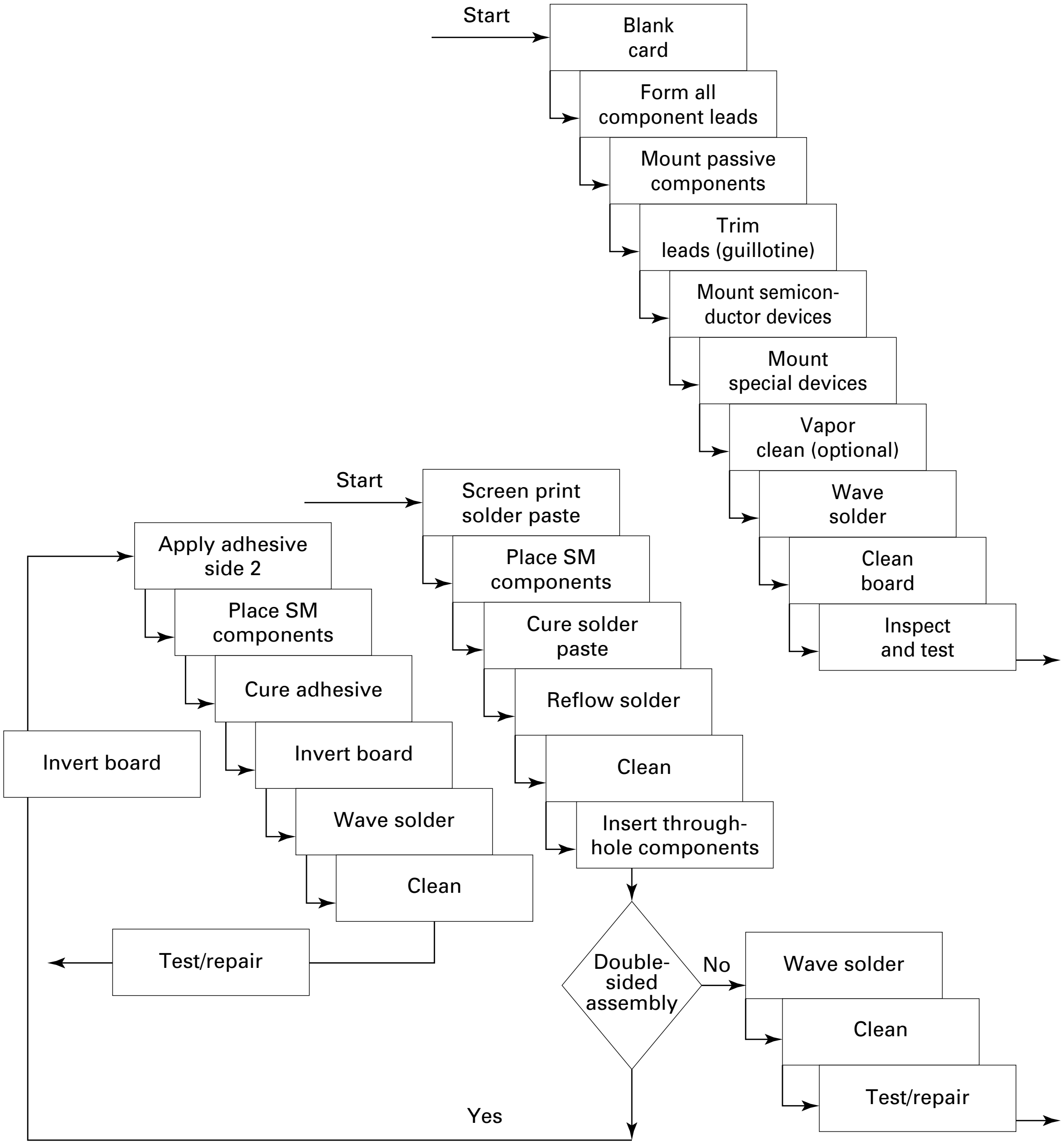

FIGURE 19-15 The assembly process steps for making a TH PCB (above). The steps for SM assembly are given below, along with the steps for mixed technologies—both TH and SM. *(Source: Haskard, M. R.,* Electronic Circuit Cards and Surface Mount Technology: A Guide to Their Design, Assembly, and Application, *New York: Prentice Hall, 1992.)*

is typically held off the surface by a distance on the order of 0.5 mm, known as the *snap-off distance* (see Figure 19-16). As the squeegee passes over the mask surface, the mask is pressed against the PCB, allowing contact between the paste and the lands on the board. After the squeegee has passed, the mask snaps back from the surface, leaving an island of solder paste on the PCB lands. Stencils are typically metal sheets or wire mesh that have been chemically etched using a lithographic process. Screens are typically formed by application, exposure, and development of a photosensitive emulsion on top of a wire mesh. Advantages of metal sheet stencils include longevity and multilevel (pads of varying thicknesses) printing, and the screens are cheaper to make. To decrease tooling costs during product development, pastes can also be dispensed without a mask through a syringe needle. Dispensing generally requires pastes with lower viscosity, which can lead to other problems, including solder paste *slump* (spreading out of the solder pastes after application).

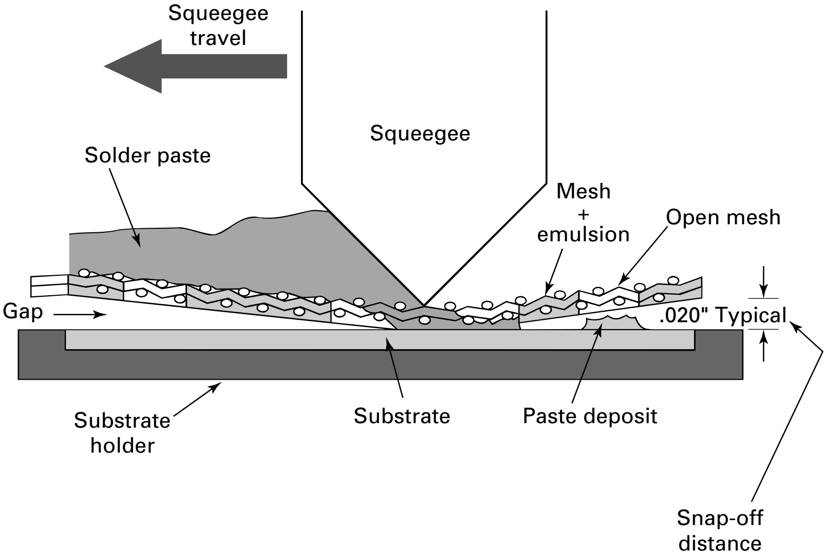

FIGURE 19-16 Schematic for applying solder paste on a substrate by squeegee in a screen printing process in SM technology. *(Source: Prasad, R.,* Surface Mount Technology: Principles and Practice, *New York: Chapman & Hall, 1997, p. 493.)*

Once the solder paste is positioned on the board, a component placement machine, also known as a *pick-and-place* machine, is used to place the components onto the solder paste pads. The flux in the solder paste is tacky and holds positioned components in place until oven soldering. Components are fed to a robotic manipulator that has a vacuum chuck or a mechanical chuck, or both. Component feeders deliver components to the manipulator. Several types of feeders exist, including tape (or reel), bulk, tube (or stick), and waffle pack. The feeder system must be carefully selected based on the desired quantity per feeder, availability, part identification, component cost, inventory turns, and potential for damage during shipping and handling. Tape feeders are widely utilized and are most desirable for high-volume placement. Tube feeders are useful for smaller-volume assemblers, even though costs per component are higher. Waffle packs are flat-machined plates with inset pockets to hold various chips. In general, waffle packs increase the cost of assembly. However, some IC packages, like the bumperless, fine-pitch QFPs, require a high level of protection during handling to minimize lead damage, so this component requires the tape-feeding mechanism. Bulk feeding of IC components, through the use of a vibratory bowl, may be useful for prototyping environments.

The economics of SM technology are driven by component placement equipment, which determines the throughput of the SM line and is the source (at least partially) of most defects requiring rework. Further, placement equipment strongly influences start-up costs because it may involve as much as 50% of the capital equipment cost in setting up a line. Key criteria in the selection of placement equipment include placement accuracy, placement rate, maximum PCB size, types and sizes of components, and maximum number of feeders, among others. In general, placement equipment has been classified into four discrete types: (1) high throughput, (2) high flexibility, (3) high flexibility and high throughput, and (4) low cost and low throughput with high flexibility. High-throughput placement machines are called *chip shooters*. Chip shooters are typically dedicated to the placement of passive (resistors, capacitors, etc.) and small active (IC) components and can place components at rates up to 60,000 components per hour with linear repeatability around 0.05 to 0.1 mm and rotational accuracy of 0.2° to 0.5° over an area 350 by 450 mm. area.

After components are placed, the PCB is placed in a *reflow* oven where the solder paste melts, causing a fluxing action that permits the melted solder to wet the leads and the PCB lands. To achieve this, the PCB must be exposed to an appropriate *thermal profile*, or time–temperature curve, as it passes through the oven. At a minimum, the thermal profile must include at least four zones. The first zone, called preheating, is used to drive off any nonflux volatiles within the paste. The second zone, the soak zone, is used to bring the entire assembly up to just below the reflow temperature of the paste. The third (reflow) zone quickly raises the temperature of the solder paste above the reflow temperature, allowing for fluxing and wetting of solder joints. The fourth zone cools the assembly, permitting solidification. Reflow soldering is generally done in infrared (IR) reflow ovens, and heating involves both IR radiation and gas-forced convection. The minimum number of heating zones for a reflow oven must be 3 (the fourth is a cooling zone), but the oven can contain as many as 20 heating zones to provide better control over the thermal profile.

An alternative to IR reflow soldering is *vapor-phase soldering*, or *condensation soldering*, involving the condensation of a hot perfluorocarbon vapor onto the assembly surface, releasing the latent heat of vaporization into the solder joints and substrates. By and large, this process has been replaced by IR reflow soldering due to improved process reliability and control. Other alternatives to IR reflow soldering include laser, hot-bar, and hot-belt reflow soldering.

For a variety of reasons, SM technology and through-hole insertion technology are mixed on the same PCB. Some components are not available in SM packages. Some components are large and require the added strength provided by TH solder joints. Some components require more heat dissipations than SM can accommodate. Thus both methods will continue to be used in the future.

19.3 ELECTROCHEMICAL MACHINING PROCESSES

ELECTROCHEMICAL MACHINING

Electrochemical machining, commonly designated ECM, removes material by anodic dissolution with a rapidly flowing electrolyte. It is basically a deplating process in which the tool is the cathode and the workpiece is the anode; both must be electrically conductive. The electrolyte, which can be pumped rapidly through or around the tool, sweeps away any heat and waste product (sludge) given off during the reaction. The sludge is captured and removed from the electrolyte through filtration. The shape of the cavity is defined by the tool, which is advanced by means of a servomechanism that controls the gap between the electrodes (i.e., the interelectrode gap) to a range from 0.003 to 0.03 in. (0.01 in. typical). The tool advances into the work at a constant feed rate, or penetration rate, that matches the deplating rate of the workpiece. The electrolyte is a highly conductive solution of inorganic salt—usually NaCl, KCl, and $NaNO_3$ (or other proprietary mixtures)—and is operated at about 75° to 150°F with flow rates ranging from 50 to 200 ft/sec. The temperature of the electrolyte is maintained through appropriate temperature controls. Tools are usually made of copper or brass and sometimes stainless steel. The process is shown schematically in Figure 19-17.

The behavior of the ECM process is governed by the laws of electrolysis (the use of electrical current to bring about chemical change). Faraday's first law of electrolysis states that the amount of chemical change (material removed) during electrolysis is proportional to the charge (number of electrons) passed. This can be expressed mathematically as

$$n = K \cdot I \cdot t \tag{19-4}$$

where n is the theoretical number of moles of material removed; I is the applied current, that is assumed to stay constant; and t is the time over which the current is applied. The term K is a proportionality constant, that is inversely proportional to the valence of the workpiece material.

To convert equation 19-4 into a useful expression for estimating the theoretical material removal rate, the number of moles, n, can be converted into a material volume by multiplying through the atomic weight, A_w, and dividing by the density, p, of the workpiece material. Further, by dividing through by the time, t, an expression for the volumetric material removal rate is obtained,

$$\text{MRR} = \left(\frac{K \cdot A_w}{p}\right) \cdot I = \text{MRR}_s \cdot I \tag{19-5}$$

where MRR_s is a proportionality constant called the specific material removal rate based on the valence, atomic weight, and density of the workpiece material. In suitable applications, material removal rates on the order of 0.1 in.^{3} min per 1000 A

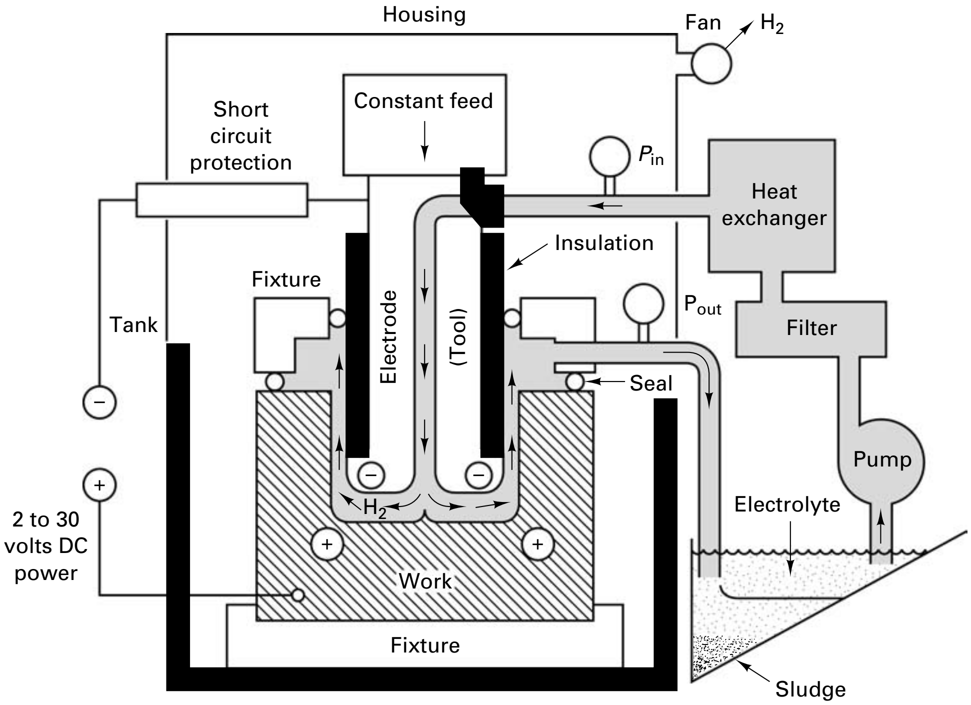

FIGURE 19-17 Schematic diagram of electrochemical machining process (ECM).

can be expected. Table 19-3 shows the specific material removal rate for some different materials.

An estimate for the theoretical feed rate, f_t, or penetration rate, in ECM can be made by dividing equation 19-5 by the area of workpiece material, A, exposed to the ECM tool at the interelectrode gap. This yields:

$$f_r = \text{MRR}_s \cdot \frac{I}{A} = \text{MRR}_s \cdot J \tag{19-6}$$

Equations 19-4 through 19-6 assume that the efficiency, E, for metal removal by electrolysis is 100%, though normally it is in the range of 90% to 100% depending on the current, voltage, and other operating conditions. Therefore, equations 19-5 and 19-6 may be modified as follows:

$$\text{MRR} = E \cdot \text{MRR}_i \tag{19-7}$$

$$f_r = E \cdot f_i \tag{19-8}$$

where MRR and f_r are the actual material removal rate and actual feed rate, respectively.

As shown in equation 19-6, the penetration rate in ECM is primarily a function of the current density, J, and the physical properties of the material. Current densities from 50 to 1500 A/in.^{2} are used, and typical penetration rates in metals are from 0.02 to 0.75 in./min. Figure 19-18 shows that the penetration rate in ECM is also a function of the interelectrode gap. As the interelectrode gap is reduced, the resistance across the gap is also reduced, permitting a larger flow of electrons. One disadvantage of reducing the interelectrode gap is that the likelihood of plating anodic material onto the cathode is increased, thereby requiring higher electrolyte flow rates.

The importance of these implications is that the penetration rate, while a function of current density and interelectrode gap, is not directly affected by the

TABLE 19-3 Material Removal Rates for ECM of Alloys Assuming 100% Current Efficiency

Alloy	Theoretical Removal Rates for 1000 Amperes per Square Inch	
	in.^{3}/min	cm^3/min
4340 steel	0.133	2.18
17-4 PH	0.123	2.02
A-286	0.117	1.92
M252	0.110	1.80
Rene 4l	0.108	1.77
Udimet 500	0.110	1.80
Udimet 700	0.108	1.77
L605	0.107	1.75

Note: Rates listed were calculated using Faraday's law and valences as follows:

Aluminum	3	Copper	2	Silicon	0
Carbon	0	Iron	4	Titanium	4
Columbium	3	Manganese	3	Tungsten	6
Cobalt	2	Molybdenum	4	Vanadium	5
Chromium	3	Nickel	2		

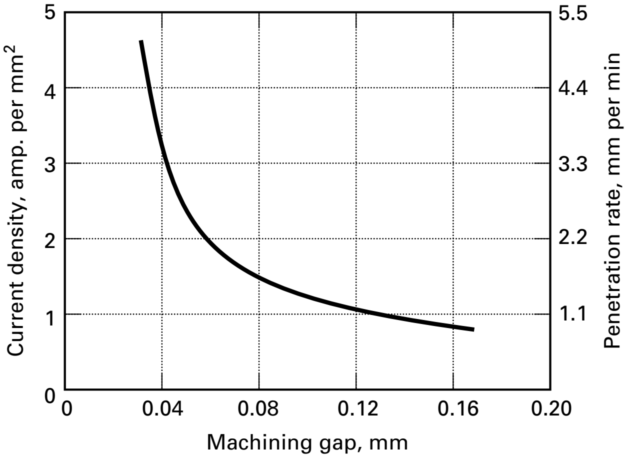

FIGURE 19-18 Relationship of current density, penetration rate, and machining gap in electrochemical machining.

hardness or toughness of the work material. This makes ECM advantageous for the machining of certain high-strength materials with poor machinability. Penetration rates up to 0.1 in./min are obtained routinely in Waspalloy, a very hard metal alloy.

Pulsed-current ECM (PECM) has recently shown the potential to improve accuracies and surface finish in traditional ECM. In PECM, high-current densities (>100 A/cm^2) are pulsed on for durations on the order of 1 ms and pulsed off for intervals on the order of 10 ms. The relaxation (pulse off) interval permits reaction by-products to be removed from the interelectrode gap at low electrolyte flow rates without electrolytic deposition on the ECM tool. As a result, high-current densities can be used at small interelectrode distances, improving both removal rates and precision. Because PECM allows lower electrolyte flow rates, it has been proposed to remove recast layers from the surface of dies produced by electrical discharge machining (EDM). Some efforts are being made to integrate this technology into EDM platforms.

Pulsed currents have also been used in *electrochemical micromachining* (EMM). In one variation of the process, photolithographic masks are used to concentrate material removal in selective areas of thin films. In addition to providing smoother surfaces (on the order of electropolished surfaces) than those found in traditional ECM, the high-current density (~ 100 A/cm^2) results in less taper in etching profiles and more uniform material removal across the workpiece, which are important for shrinking feature sizes in micromachining.

Electrochemical polishing is a modification of the ECM process that operates essentially the same as ECM, but with a much slower penetration rate. Current density is lowered, which greatly reduces the material removal rate and produces a fine finish on the order of 10 min. Electrochemical polishing must be differentiated from *electropolishing*, which operates without the use of a part-specific hard tool.

Electrochemical Hole Machining. Several electrochemical hole-drilling processes have been developed for drilling small holes with high aspect (depth-to-diameter) ratios in difficult-to-machine materials. In *electrostream drilling*, large numbers of holes (over 50) can be simultaneously gang drilled in nickel and cobalt alloys with diameters down to 0.005 in. at aspect ratios of 50:1. Machining is performed by a high-velocity stream of charged, acidic electrolyte ejected from the capillary end of a drawn glass tube (the tool). An internal electrode (e.g., a small titanium wire) is fed into the large end of the tube and placed close to the capillary. The electrode is used to charge the electrolyte, which is pumped through the tube. An acidic electrolyte is used so that the sludge by-product goes into solution instead of clogging flow. Voltages used in the process are 10 to 20 times higher than that of typical ECM processes. This technique was originally developed to drill high-incident-angle, cooling holes in turbine blades for jet engines.

A second process, known as the *shaped-tube electrolytic machining* (STEM) process, was also created in response to unique challenges presented in the jet engine industry. Like the electrostream process, STEM is also capable of gang drilling small holes in difficult-to-machine materials. However, the STEM process is generally not capable of drilling holes smaller than about 0.02 in. STEM is capable of making shaped holes with aspect ratios as high as 300:1. Holes up to 24 in. in depth have been drilled. Like the electrostream process, it uses an acidic electrolyte to minimize clogging due to sludge buildup. The major differences between the STEM process and the electrostream process are the reduced voltage levels (5 to 10 V dc) and the special electrodes, which are long, straight, metallic tubes coated with an insulator (Figure 19-19). The insulator helps to eliminate taper by constraining the electrolytic action between the bottom of the tool and the workpiece. Titanium is often used for its ability to resist acids. The electrolyte is pressure-fed through the tube and returns through the gap (0.001 to 0.002 in.) between the insulated tube wall and the hole wall. Electrolyte concentrations may include up to 10% sulfuric acid. Lower concentrations may be used to increase tool life.

Electrochemical Grinding. *Electrochemical grinding*, commonly designated ECG, is a low-voltage, high-current variant of ECM in which the tool cathode is a rotating, metalbonded, diamond grit grinding wheel. The setup shown in Figure 19-20 for grinding a cutting tool is typical. As the electric current flows through the electrolyte between the workpiece and the wheel, some surface metal is removed electrochemically and some is changed to a metal oxide, which is ground away by the abrasives. As the oxide film is

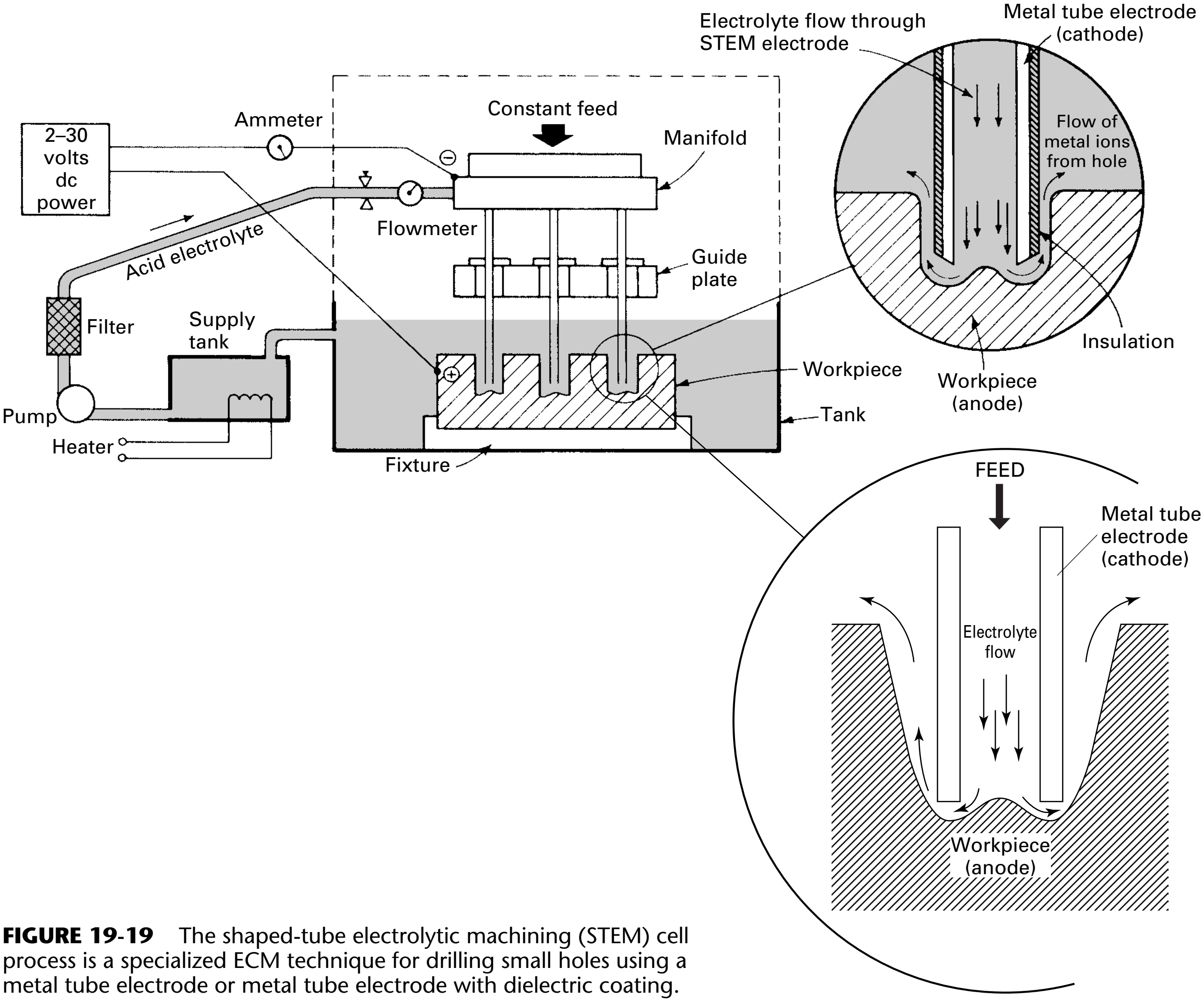

FIGURE 19-19 The shaped-tube electrolytic machining (STEM) cell process is a specialized ECM technique for drilling small holes using a metal tube electrode or metal tube electrode with dielectric coating.

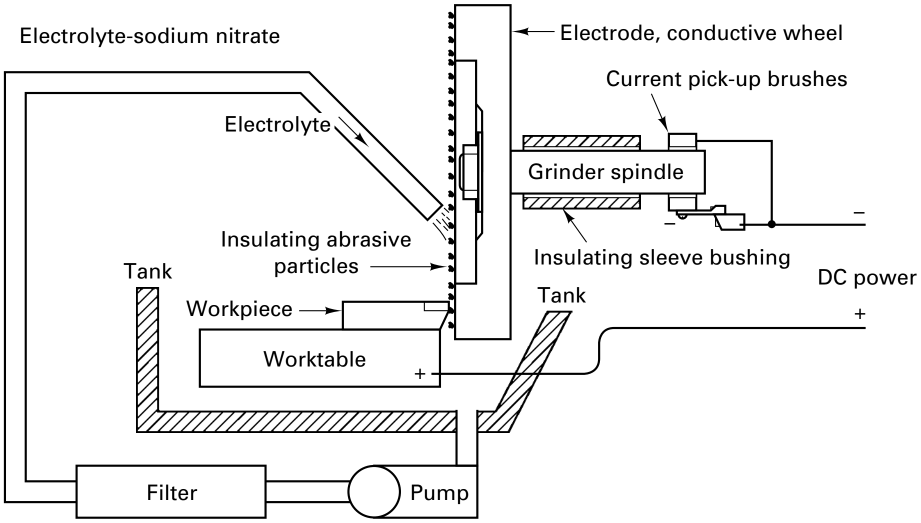

FIGURE 19-20 Equipment setup and electrical circuit for electrochemical grinding.

removed, new surface metal is exposed to electrolytic action. Most of the material removal is electrochemical, with only about 10% of the material being removed by grinding. The metal removal rate (MRR) is dependent on many variables. Table 19-4 gives some typical values for the MRR.

The wheels used in ECG must be electrically conductive abrasive wheels. For most metals, resin-bonded aluminum oxide wheels are recommended. The resin bond is loaded with copper to provide for negligible electrical resistance. The wheels are dressable, using a variety of wheel-dressing measures. Once dressed, the wheels can then be used for precision form-grinding operations.

The abrasive particles are hard, nonconducting materials such as aluminum oxide, diamond, or borazon (cubic boron nitride). In addition to increasing the efficiency of the process, the abrasives act as an insulating spacer, maintaining a separation of from 0.0005 to 0.003 in. (0.012 to 0.05 mm) between the electrodes. A dead short would result if the insulating particles were absent. The particles also serve to grind away any passivating oxide that should form during electrolysis. The process is used for shaping and sharpening carbide cutting tools, which cause high wear rates on expensive diamond wheels in normal grinding. ECG greatly reduces wheel wear. Fragile parts (e.g., honeycomb structures), surgical needles, and tips of assembled turbine blades have also been ECG-processed successfully. The lack of heat damage, burrs, and residual stresses is very beneficial, particularly when coupled with MRRs that are competitive with conventional grinding and far less wheel wear.

Electrochemical Deburring. *Electrochemical deburring* is a deburring process which works on the principle that electrolysis is accelerated in areas with small interelectrode gaps and prevented in areas with insulation between electrodes. The cathodic tool in electrochemical deburring is stationary and generally shaped as a negative of the workpiece to focus the electrolysis on the region of the workpiece where burrs are to be removed. Portions of the tool not used for deburring are coated with insulation to prevent the electrolytic reaction. The process does not require a feed mechanism. A fixture made of insulating material is used to position the workpiece with respect to the cathodic tool. Because of the small amount of material removed, electrochemical deburring generally requires short cycle times under one minute.

Design Factors in Electrochemical Machining. In general, current densities tend to concentrate at sharp edges or features and, therefore, produce rounded corners. Therefore, ECM processes should not be used to create sharp corners or pockets in the workpiece, although sharp corners are possible on through-features. Due to the need for an interelectrode gap, the actual feature size will be larger than the tool size. The overcut on the side of the tool is normally on the order of 0.005 in. Taper should be expected in all features due to electrolytic reaction between the side of the tool and the workpiece.

TABLE 19-4 Metal Removal Rates for ECG for Various Metals

		Density		Metal Removal Rate at 1000 A		
Metal	Valency	lb/in^3	g/cm^3	lb/hr	in^3/min	cm^3/min
Aluminum	3	0.098	2.67	0.74	0.126	2.06
Beryllium	2	0.067	1.85	0.37	0.092	1.50
Chromium	2	0.260	7.19	2.14	0.137	2.25
	3			1.43	0.092	1.51
	6			0.71	0.046	0.75
Cobalt	2	0.322	8.85	2.42	0.125	2.05
	3			1.62	0.084	1.38
Niobium (columbium)	3	0.310	8.57	2.55	0.132	2.16
	4			1.92	0.103	1.69
	5			1.53	0.082	1.34
Copper	1	0.324	8.96	5.22	0.268	4.39
	2			2.61	0.134	2.20
Iron	2	0.284	7.86	2.30	0.135	2.21
	3			1.53	0.090	1.47
Magnesium	2	0.063	1.74	1.00	0.265	4.34
Manganese	2	0.270	7.43	2.26	0.139	2.28
	4			1.13	0.070	1.15
	7			0.65	0.040	0.66
Molybdenum	3	0.369	10.22	2.63	0.119	1.95
	4			1.97	0.090	1.47
	6			1.32	0.060	0.98
Nickel	2	0.322	8.90	2.41	0.129	2.11
	3			1.61	0.083	1.36
Silicon	4	0.084	2.33	0.58	0.114	1.87
Silver	1	0.379	10.49	8.87	0.390	6.39
Tin	2	0.264	7.30	4.88	0.308	5.05
	4			2.44	0.154	2.52
Titanium	3	0.163	4.51	1.31	0.134	1.65
	4			0.99	0.101	
Tungsten	6	0.697	19.3	2.52	0.060	0.98
	8			1.89	1.89	0.74
Uranium	4	0.689	19.1	4.90	0.117	1.92
	6			3.27	0.078	1.29
Vanadium	3	0.220	6.1	1.40	0.106	1.74
	5			0.84	0.064	1.05
Zinc	2	0.258	7.13	2.69	0.174	2.85

Source: 1985 SCTE Conference Proceedings, ASM, Metals Park, OH, 1986.

Depending on the tool design, taper can be held to 0.001 in./in. For micromachining applications, insulator material may be placed on the side of the tool to prevent the taper effects.

Control of the electrolyte flow can be difficult in parts with irregular shapes. Changes in electrolyte concentration due to varying flow patterns can change the local resistance across the interelectrode gap, resulting in local variations in removal rates and tolerances. In addition, high electrolytic flow rates can cause erosion of workpiece features. Therefore, complex geometries requiring tortuous interelectrode flow paths are discouraged.

Generally, no detrimental effects to the properties of the workpiece material are expected when using ECM. However, the lack of compressive residual stresses imparted to the surface of the workpiece during operation can have a negative impact on the fatigue resistance of the part when compared with mechanically machined parts. Further, if parameters are set improperly, the process may favor electrolysis at the grain boundaries, resulting in intergranular attack, which may also have a negative effect on the fatigue resistance of the part. If possible, shot peening or some similar process may be used to impart compressive stresses to the surface of the workpiece, thereby improving its fatigue resistance.

Advantages and Disadvantages of Electrochemical Machining. ECM is well suited for the machining of complex two-dimensional shapes into delicate or difficult-to-machine geometries made from poorly machinable but conductive materials. The principal tooling cost is for the preparation of the tool electrode, which can be time consuming and costly, requiring several cut-and-try efforts for complex shapes, since it is difficult to predict the precise final geometry due to variable current densities produced by certain electrode geometries (e.g., corners) or electrolyte flow variations. There is no tool wear during actual cutting, which suggests that the process becomes more economical with increasing volume. The process produces a stress-free surface, which can be advantageous, especially for small, thin parts. The ability to cut a large area simultaneously (as in chemical and electrical discharge machining) makes the production of small parts very productive. However, as in chemical machining, ECM requires the disposal of environmentally harmful by-products.

19.4 ELECTRICAL DISCHARGE MACHINING

As early as the 1700s, Benjamin Franklin wrote of witnessing the removal of metal by electrical sparks. However, it was not until the 1940s that development of the *electrical discharge machining* (EDM) process, also known as electric or electro discharge machining, began in earnest. Today, it is one of the most widely used of the nontraditional machining processes.

EDM processes remove metal by discharging electric current from a pulsating DC power supply across a thin interelectrode gap between the tool and the workpiece. See Figure 19-21 for a schematic. The gap is filled by a dielectric fluid, which becomes locally ionized at the point where the interelectrode gap is the narrowest—generally, where a high point on the workpiece comes close to a high point on the tool. The ionization of the dielectric fluid creates a conduction path in which a spark is produced. The spark produces a tiny crater in the workpiece by melting and vaporization, and consequently tiny, spherical "chips" are produced by resolidification of the melted quantity of workpiece material. Bubbles from discharge gases are also produced. In addition to machining the workpiece, the high temperatures created by the spark also melt or vaporize the tool, creating tool wear. The dielectric fluid is pumped through the interelectrode gap and

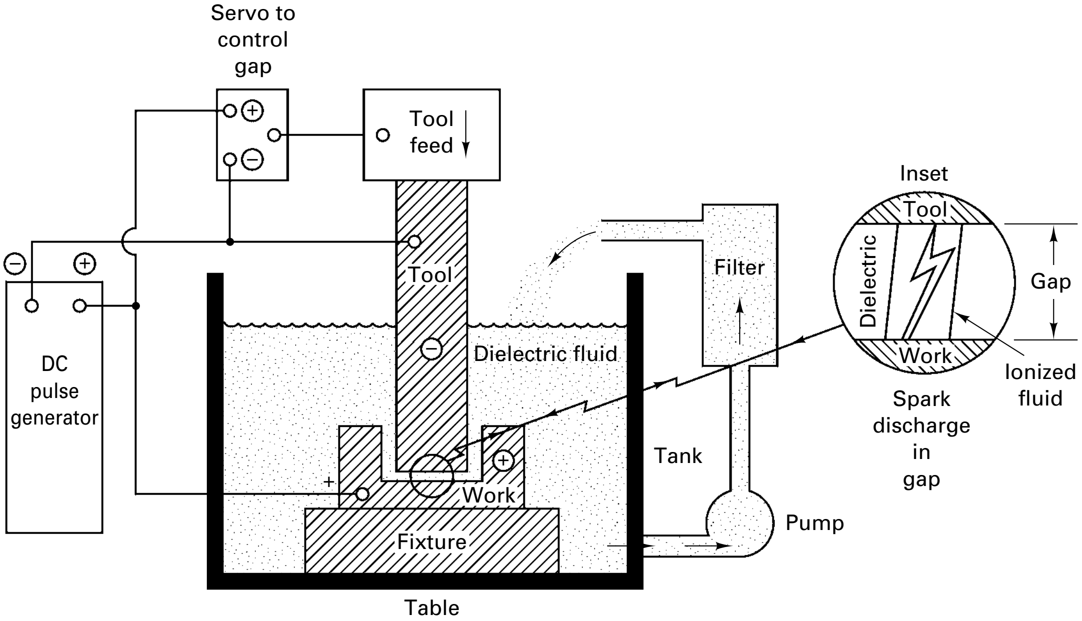

FIGURE 19-21 EDM or spark erosion machining of metal, using high-frequency spark discharges in a dielectric, between the shaped tool (cathode) and the work (anode). The table can make *X–Y* movements.

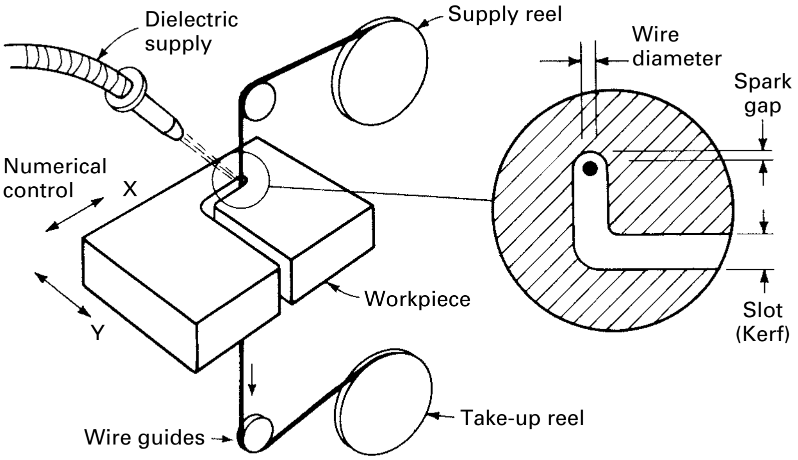

FIGURE 19-22 Schematic diagram of equipment for wire EDM using a moving wire electrode.

flushes out the chips and bubbles while confining the sparks. Once the highest point on the workpiece is removed, a subsequent spark is created between the tool and the next highest point, and so the process proceeds into the workpiece. Literally hundreds of thousands of sparks may be generated per second. This material removal mechanism is described as *spark erosion*.

Two different types of EDM exist based on the shape of the tool electrode used. In *ram EDM*, also known as *sinker EDM* or simply *EDM*, the electrode is a die in the shape of the negative of the cavity to be produced in a bulk material. By feeding the die into the workpiece, the shape of the die is machined into the workpiece.

In *wire EDM*, also known as *electrical discharge wire cutting*, the electrode is a wire used for cutting through-cut features, driving the workpiece with a computer numerical controlled (CNC) table (Figure 19-22).

Wire EDM uses a continuously moving conductive wire as the tool electrode. The tensioned wire of copper, brass, tungsten, or molybdenum is used only once, traveling from a take-off spool to a take-up spool while being "guided" to produce a straight, narrow kerf in plates up to 3 in. thick. The wire diameter ranges from 0.002 to 0.01 in., with positioning accuracy up to ±0.00002 in. in machines with numerical control (NC) or tracer control. The dielectric is usually deionized water because of its low viscosity. This process is widely used for the manufacture of punches, dies, and stripper plates, with modern machines capable of routinely cutting die relief, intricate openings, tight radius contours, and corners. See Figure 19-23 for some examples.

EDM processes are slow compared to more conventional methods of machining, and they produce a matte surface finish composed of many small craters. While feed rates in EDM are slow, EDM processes can still compete with conventional machining in producing complex geometries, particularly in hardened tool materials. As a result, one of the biggest applications of EDM processes is tool and die making. Another drawback of EDM is the formation of a recast or remelt layer on the surface and a heat-affected zone below the surface of the workpiece. Figure 19-24 shows a scanning electron micrograph of a recast layer on top of a ground surface. Note the small spheres in the lower-right corner attached to the surface, representing chips that did not escape the surface. Below the recast layer is a heat-affected zone on the order of 0.001 in. thick. The effect of the recast layer and heat-affected zone is poor surface finish as well as poor surface integrity and poor fatigue strength.

MRR and surface finish are both controlled by the spark energy. In modern EDM equipment, the spark energy is controlled by a DC power supply. The power supply works by pulsing the current on and off at certain frequencies (between 10 and 500 kHz). The on-time as a percentage of the total cycle time (inverse of the frequency) is called the *duty cycle*. EDM power supplies must be able to control the pulse voltage, current, duration, duty cycle, frequency, and electrode polarity. The power supply controls the spark energy mainly by two parameters: current on-time and discharge current.

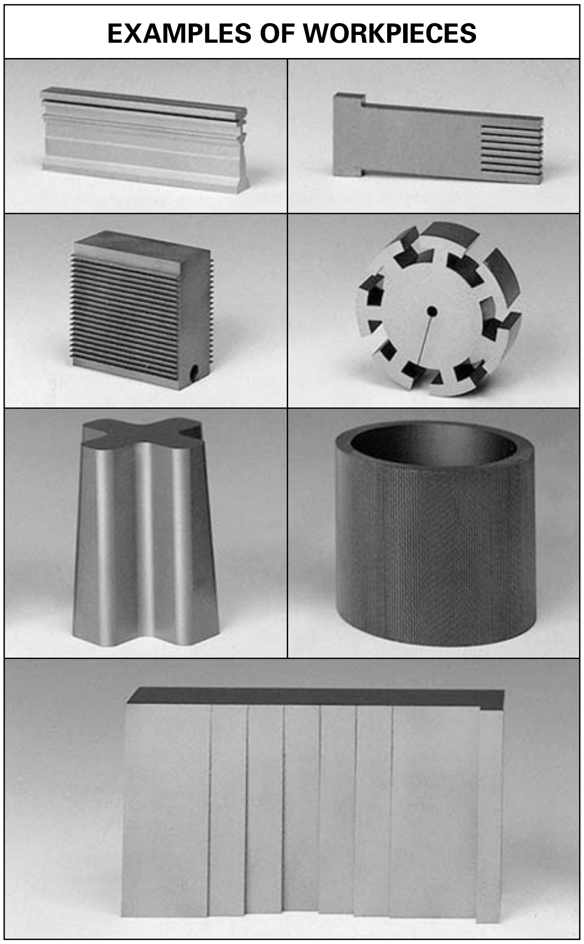

FIGURE 19-23 Examples of wire EDM workpieces made on NC machine (Hatachi).

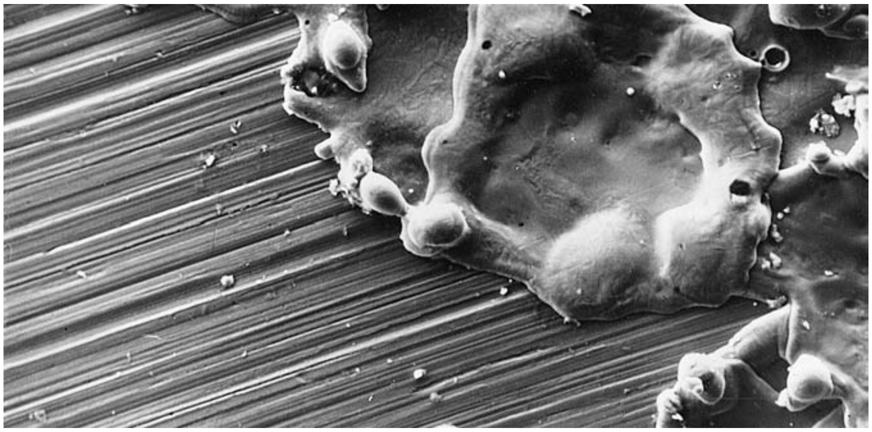

FIGURE 19-24 SEM micrograph of EDM surface (right) on top of a ground surface in steel. The spheroidal nature of debris on the surface is in evidence around the craters (300×).

Figure 19-25 shows the effect of current on-time and discharge current on crater size. Larger craters are good for high MRRs. Conversely, small craters are good for finishing operations. Therefore, generally, higher duty cycles and lower frequencies are used to maximize MRR. Further, higher frequencies and lower discharge currents are used to improve surface finish while reducing the MRR. Higher frequencies generally cause increased tool wear.

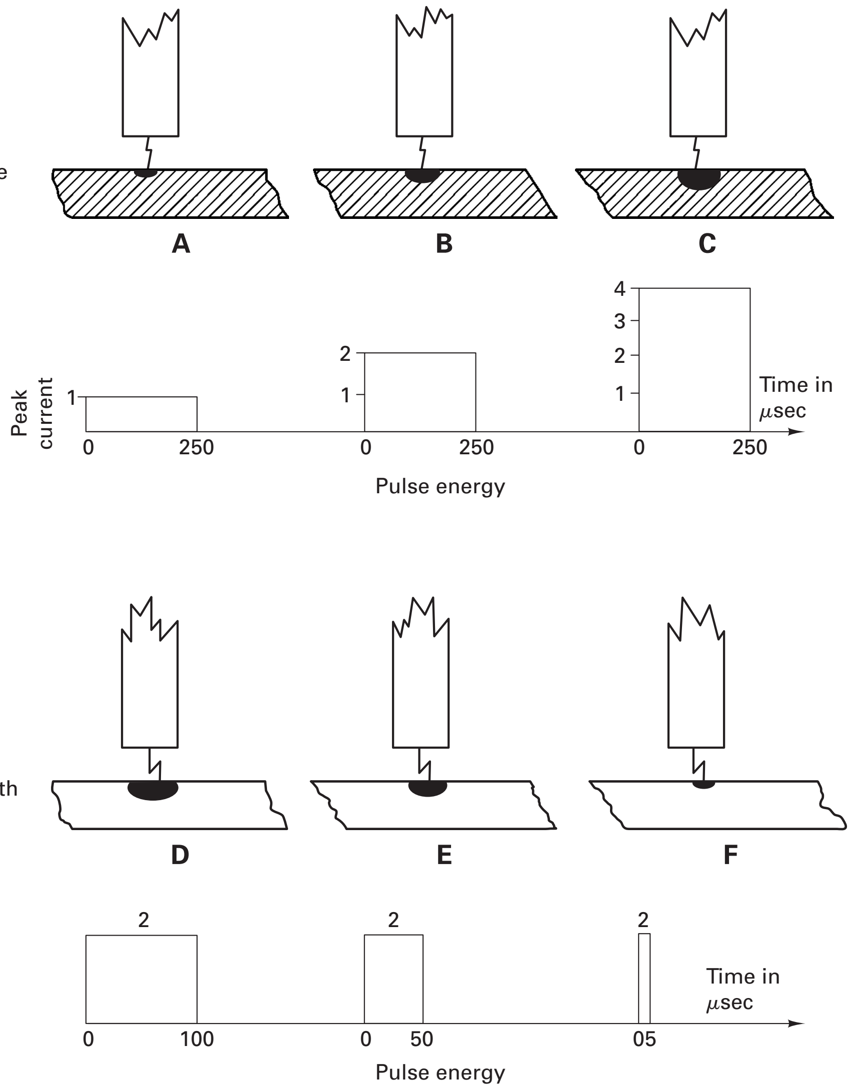

Metal removal rates increase with the amount of energy per spark.

The crater size decreases with current on-time.

FIGURE 19-25 The principles of metal removal for EDM.

An estimate for the MRR in ram EDM for a given workpiece material has been given in Weller:

$$\text{MRR} = \frac{C \cdot I}{T_m^{1,23}} \tag{19-9}$$

where MRR is the material removal rate in in.^{3}/min (cm^3/min); C is a proportionality constant equal to 5.08 in British standard units (39.86 in SI units); I is the discharge current in amps; and T_m is the melting temperature of the workpiece material, °F (°C). Melting points of selected metals are shown in Table 19-5. While this equation shows that the MRR is based mainly on the discharge current, it is recognized that MRR is more a function of current density. For graphite electrodes, a generally accepted rule of thumb for the maximum current density is 65 amps per square centimeter of surface area. Given these guidelines, an expression for the maximum MRR, MRR_{max}, can be derived:

$$\text{MRR}_{\text{max}} = \frac{C_{\text{max}} \cdot A_s}{T_m^{1,23}} \tag{19-10}$$

where C_{max} is a proportionality constant equal to 51.2 in British standard units (2591 in SI units) and is the bottom-facing surface area of the electrode in in.^{2} (cm^2). This formula suggests that the MRR in EDM is also a function of the tooling geometry. The larger and more highly contoured the electrode surface, the slower the MRR at the same discharge current.

TABLE 19-5 Melting Temperatures for Selected EDM Workpiece Materials

Metal	Melting Temperature, Metal °F (°C)
Aluminum	1200 (660)
Carbon steel	2500 (1371)
Cobalt	2696 (1480)
Copper	1980 (1082)
Manganese	2300 (1260)
Molybdenum	4757 (2625)
Nickel	2651 (1455)
Titanium	3308 (1820)
Tungsten	6098 (3370)

The size of the cavity cut by the EDM tool will be larger than the tool. That is, the distance between the surface of the electrode and the surface of the workpiece represents the *overcut* and is constrained by the minimum interelectrode distance necessary for a spark, which is essentially constant over all areas of the electrode, regardless of size or shape. Typical overcut values range from 0.0005 to 0.02 in. Overcut depends on the gap voltage plus the chip size, which varies with the amperage. EDM equipment manufacturers publish overcut charts for the different power supplies for their machines, and these values can be used by tool designers to determine the appropriate dimensions of the electrode. The dimensions of the tool are basically equal to the desired dimensions of the part less the overcut values.

While different materials are used for the tool electrodes, graphite is the most widely used, representing approximately 85% of electrodes. The choice of electrode material depends on its machinability and cost as well as the desired MRR, surface finish, and tool wear. Equations 19-9 and 19-10 show that the most important material characteristic for MRR is melting temperature. This relationship also applies to tool wear. The higher the melting temperature of the electrode, the less tool wear (i.e., material removed). In addition to its good machinability, graphite has a very high sublimation temperature (3500°C), which is good for minimizing tool wear. In addition to melting temperature, materials with high densities and high specific heats tend toward less tool wear. Cheaper metallic electrode materials with lower melting temperatures can be used in cases where low-temperature metals are to be machined. And in some cases requiring good surface finish, a case can be made for metallic electrodes, since spark energies are generally lower, resulting in reduced temperatures in the interelectrode gap. Copper, brass, copper–tungsten,aluminum, 70Zn-30Sn, and other alloys have all been employed as electrode (tool) materials for different reasons. In addition to tool material selection, tool wear may be minimized by using the proper polarity across the electrodes. To minimize tool wear in most electrode materials, the tool should be kept positive and the workpiece negative, although larger MRRs are possible with reversed polarity.

The dielectric fluid has four main functions: electrical insulation between the tool and workpiece; spark conductor; flushing medium; and coolant. The fluid must ionize to provide a channel for the spark and deionize quickly to become an insulator. Perhaps the most important factor in EDM is flushing of the interelectrode gap to remove residual materials and gas. Filters in the fluidic circuit are used to remove these wastes from the dielectric fluid. In addition, the fluid must carry away the heat produced in the process. A gross temperature change in the dielectric fluid significantly changes the properties of the fluid. Therefore, a heat exchanger is added to the fluidic circuit to remove heat from the dielectric fluid. Common dielectric fluids include paraffin, kerosene, and silicon-based dielectric oil. Polar compounds, such as glycerine water (90:10) with triethylene oil as an additive, have been shown to improve the MRR and decrease the tool wear when compared with traditional dielectric fluids, such as kerosene. The dielectric materials must be safe for inhalation and skin contact because operators are in constant in contact with the fluid.

Advantages and Disadvantages of EDM. EDM is applicable to all materials that are fairly good electrical conductors, including metals, alloys, and most carbides. The hardness, toughness, or brittleness of the material imposes no limitations. EDM provides a relatively simple method for making holes and pockets of any desired cross section in materials that are too hard or too brittle to be machined by most other methods. The process leaves no burrs on the edges. About 80 to 90% of the EDM work performed in the world is in the manufacture of tool and die sets for injection molding, forging, stamping, and extrusions. The absence of almost all mechanical forces makes it possible to EDM fragile or delicate parts without distortion. EDM has been used in micromachining to make feature sizes as small as 0.0004 in. (0.01 mm).

On most materials, the process produces a thin, hard recast surface, which may be an advantage or a disadvantage, depending on the use. When the workpiece material is one that tends to be brittle at room temperature, the surface may contain fine cracks caused by the thermally induced stresses. Consequently, some other finishing process is often used subsequent to EDM to remove the thin recast and heat-affected layers, particularly if the product will be fatigued. Fumes, resulting from the bubbles produced during spark erosion, are given off during the EDM process. Fumes can be toxic when electrical discharge machining boron carbide, titanium boride, and beryllium, posing a significant safety issue, although machining of these materials is hazardous in many other processes as well.

ELECTRON AND ION MACHINING

As a metals-processing tool, the electron beam is used mainly for welding, to some extent for surface hardening, and occasionally for cutting (mainly drilling). *Electron-beam machining* (EBM) is a thermal process that uses a beam of high-energy electrons focused on the workpiece to melt and vaporize metal. This process shown in Figure 19-26 is performed in a vacuum chamber. The electron beam is produced in the electron gun (also under vaccum) by thermionic emission. In its simplest form, a filament (tungsten or lanthanum-hexaboride) is heated to temperatures in excess of 2000°C, where a stream (beam) of electrons (more than 1 billion per second) is emitted from the tip of the filament. Electrostatic optics are used to focus and direct the beam. The desired beam path can be programmed with a computer to produce any desired pattern in the workpiece. The diameter of the beam is on the order of 0.0005 to 0.001 in., and holes or narrow slits with depth-to-width ratios of 100:1 can be "machined" with great precision in any material. The interaction of the beam with the surface produces dangerous X-rays; therefore, electromagnetic shielding of the process is necessary. The layer of recast material and the depth of the heat damage are very small. For micromachining applications, MRRs can exceed that of EDM or ECM. Typical tolerances are about 10% of the hole diameter or slot width. These machines require high voltages (50 to 200 kV) to accelerate the electrons to speeds of 0.5 to 0.8 the speed of light and should be operated by fully trained personnel.

Ion-beam machining (IBM) is a nano-scale (10^{-9}) machining technology used in the microelectronics industry to cleave defective wafers for characterization and failure analysis. IBM uses a focused ion beam created by thermionic emission similar to EBM to machine features as small as 50 nm. The ion beam may be focused down to a 50-nm diameter and is focused and positioned by an electrostatic optics column. Current densities up to 5 A cm^2 and voltages between 4 and 150 kV provide ion energies up to 300 A cm^2 keV. Target substrates as large as $7'' \times 7'' \times \frac{1}{4}''$ thick can be processed.

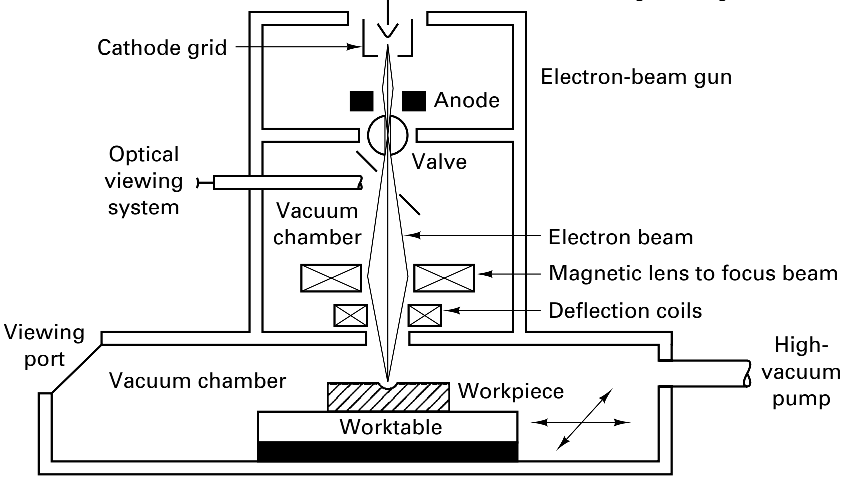

FIGURE 19-26 Electron-beam machining uses a high-energy electron beam (10^9 W/in.^{2}).

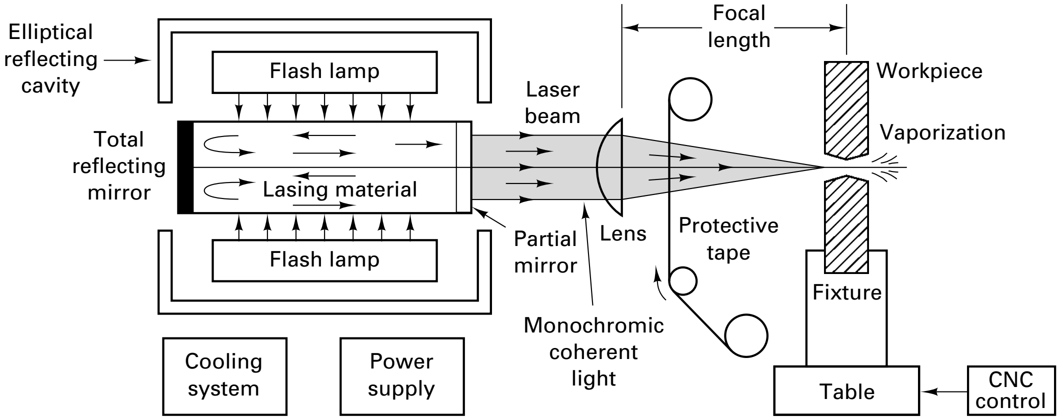

FIGURE 19-27 Schematic diagram of a laser-beam machine, a thermal NTM process that can micromachine any material.

LASER-BEAM MACHINING

Laser-beam machining (LBM) uses an intensely focused, coherent stream of light (a laser) to vaporize or chemically *ablate* materials. A schematic of the LBM process is shown in Figure 19-27. Lasers are also used for joining (welding, crazing, soldering), heat treating materials (see Chapters 5 and 36 for a discussion), and rapid prototyping (see Chapter 14). Power density and interaction time are the basic parameters in laser processing, as shown in Figure 19-28. Drilling requires higher power densities and shorter interaction times compared to most other applications.

The material removal mechanism in LBM is dependent on the wavelength of the laser used. At UV wavelengths (i.e., between about 200 and 400 nm), the material removal mechanism in polymers (for example) is generally thermal evaporation. Below 400 nm, polymeric material is typically removed by *chemical ablation*. In *ablation*, the chemical bonds between atoms are broken by the excess amount of laser energy absorbed by the valence electrons in the material. The advantage of chemical *ablation* is that since it is not a thermal process, it does not result in a heat-affected zone.

Laser light is produced within a laser cavity, which is a highly reflective cavity containing a laser rod and a high-intensity light source, or laser lamp. The light source is used to "pump up" the laser rod, which includes atoms of a lasing media that is capable of absorbing the particular wavelength of light produced by the light source. When an atom of lasing

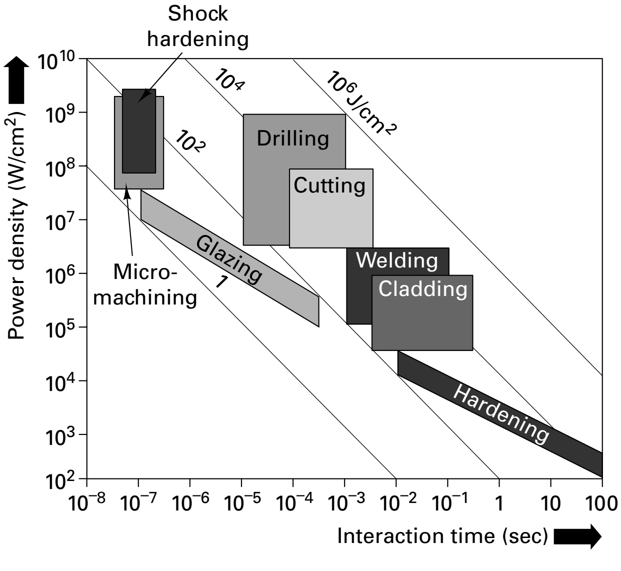

FIGURE 19-28 Power densities and interaction times in laser processing vary with the application.

TABLE 19-6 Commercial Lasers Available for Machining, Welding, and Trimming

Laser Type	Wavelength (μm)	Mode of Operation	Power (W)	Pulse Pulses per Second	Length of Time	Application	Comments
Argon	0.4880 0.5145	Pulse	20 peak; 0.005 average	60	50 μs	Scribing thin films	Power low
Ruby	0.6943	Pulse	2×10^5 peak	Low (5 to 10)	0.2–7 ms	Large material removal in one pulse, drilling diamond dies, spot welding	Often uneconomical
Nd-glass	1.06	Pulse	2×10^6 peak	Low (0.2)	0.5–10 ms	Large material removal in one pulse	Often uneconomical
Nd-YAG[a]	1.06	Continuous	1000	—	—	Welding	Compact, economical at low powers
Nd-YAG	1.06	Repetitively Q-switched	3×10^5 peak; 30 average	1–24,000	50–250 ns	Resistor trimming, electronic	Compact and economical
Nd-YAG	1.06	Pulse	400	300	0.5–7 ms	Spot weld, drill	
CO_2[b]	10.6	Continuous	15,000	—	—	Cutting organic materials, oxygen-assisted metal	Very bulky at high powers
CO_2	10.6	Repetitively Q-switched	75,000 peak 1.5 average	400	50–200 ns	Resistor trimming	Bulky but economical
CO_2	10.6	Pulse	100 average	100	100 μs and up	Welding, hole production, cutting	Bulky but economical
KrF (excimer)	0.248	Pulse	Up to several kW	100–1000	15–45 ns	Micromachining, industrial materials processing, and laser annealing	Short wavelength, high energy, and high average power
XeCl (excimer)	0.308	Pulse	200	300	40–50 ns		

Source: Modified from J. F. Ready, Selecting a laser for material working, *Laser Focus* (March 1970), p. 40.

[a] Neodymium-yttrium aluminum garnet.

[b] CO_2 plus He plus N_2 mixture.

media is struck by a photon of light, it becomes energized. When a second photon strikes the energized atom, the atom gives off two photons of identical wavelength, moving in the same direction and with the same phase. This process is called *stimulated emission*. As the two photons now stimulate further emission from other energized atoms, a cascading of stimulated emission ensues. To increase the number of stimulated emissions, the laser rod has mirrors on both ends that are precisely parallel to one another. Only photons moving perpendicular to these two mirrors stay within the laser rod, causing additional stimulated emission. One of the mirrors is partially transmissive and permits some percent of the laser energy to escape the cavity. The energy leaving the laser rod is the laser beam.

Table 19-6 lists some commercially available lasers for material processing. The most common industrial laser is the CO_2 laser. The CO_2 laser is a gas laser that uses a tube of helium and carbon dioxide as the laser rod. Output is in the far-infrared range (10.6 μm), and the power can be up to 10 kW. Nd:YAG lasers are called solid-state lasers. The laser rod in these lasers is a solid crystal of yttrium, aluminum, and garnet that has been doped with neodymium atoms (the lasing media). The output wavelength is in the near-infrared range (1064 nm), and power up to 500 W is common. For micromachining applications, modifications can be made to a 50-W Nd:YAG laser to output at one-half (532 nm), one-third (355 nm), and one-fourth (266 nm) of this wavelength, with roughly an order of magnitude reduction in power from 1064 to 532 to 266 nm. More recently, gas lasers, called *excimer* (from *exc*ited d*imer*) lasers, have been developed with laser rods consisting of excited complex molecules (usually noble gas halides) called dimers. Excimer lasers are pulsed lasers that output in the near and deep UV range at powers up to 100 W. Excimer lasers are significantly more expensive to purchase and operate than CO_2 or Nd:YAG lasers.

Lasers produce highly collimated, coherent (in-phase) light, which, when focused to a small diameter, produces high-power densities that are good for machining. It is generally accepted that in order to evaporate materials, infrared power densities in excess of 10^5 W/mm^2 are needed. For CO_2 lasers, these levels are directly achievable. However, in Nd:YAG lasers, these high power conditions would significantly decrease the life of the laser lamp. Therefore, Nd:YAG lasers make use of a Q-switch, which breaks up the continuous light stream into a series of higher power pulses. Pulsed Nd:YAG lasers may have peak powers in excess of 30 kW at 1064 nm and peak power densities in excess of 2 X 10^7 W/mm^2, which are easily enough for metal sublimation. With this magnitude of power density, the thermal effects of LBM are minimal.

Applications of LBM are widely varied. Most CO_2 industrial laser CNC machining centers can focus the beam down to a diameter of about 0.005 in. Applications for these systems range from cigarette paper cutting to drilling microholes in turbine engine blades to cutting steel plate for chain saw blades. For printed circuit board and chip scale packaging applications, Nd:YAG, excimer, and now pulsed lasers are being used to drill holes down to 0.001 in. in milliseconds in polyimide or polyester films. However, this drilling is limited to rather thin stock (0.01 in.), as the cutting speed drops off rapidly with penetration into the material. Hole depth-to-diameter ratios of 10:1 are common, and hole geometry is irregular. Recast and heat-affected zones exist adjacent to the cuts. Deep UV excimer and Nd:YAG lasers are ideal for micromachining applications. Deep UV lasers use primarily a chemical ablation mechanism for material removal. In addition to providing the potential for eliminating thermal effects in machining, deep UV lasers (having lower wavelengths) may be focused to tighter diameters than lasers with higher wavelengths. While less powerful than infrared lasers, deep UV lasers (because of chemical ablation mechanisms) experience much greater energy efficiencies in cutting. Holes as small as 60 μin. (1.5 μm) in diameter have been machined in thin-film materials with excimer lasers.

In LBM, the wavelength used to process the material is mainly determined by the optical characteristics (reflectivity, absorptivity, and transmissivity) of the workpiece. Not all materials can be machined by all lasers. Protective eyeware is necessary when working around laser equipment because of the potential damage to eyesight from either direct or scattered laser light.

PLASMA ARC CUTTING

Plasma arc cutting (PAC) uses a superheated stream of electrically ionized gas to melt and remove material (Figure 19-29). The 20,000° to 50,000°F plasma is created inside a water-cooled nozzle by electrically ionizing a suitable gas such as nitrogen, hydrogen, argon, or mixtures of these gases. The process can be used on almost any conductive metal. The plasma arc is a mixture of free electrons, positively charged ions, and neutral atoms. The arc is initiated in a confined gas-filled chamber by a high-frequency spark. The high-voltage, DC power sustains the arc, which exits from the nozzle at near-sonic velocity. The workpiece is electrically positive. The high-velocity gases melt and blow away the molten metal "chips." Dual-flow torches use a secondary gas or water shield to assist in blowing the molten metal out of the kerf, giving a cleaner cut. The process may be performed underwater, using a large tank to hold the plates being cut. The water assists in confining the arc and reducing smoke. The main advantage of PAC is speed. Mild steel $\frac{1}{4}$ in. thick can be cut at 125 in./min. Speed decreases with thickness. Greater nozzle life and faster cutting speeds accompany the use of water-injection-type torches. Control of nozzle standoff from the workpiece is important. One electrode size can be used to machine a wide variety of materials and thicknesses by suitable adjustments to the power level, gas type, gas flow rate, traverse speed, and flame angle. PAC is sometimes called plasma-beam machining.

PAC can machine exotic materials at high rates. Profile cutting of metals, particularly of stainless steel and aluminum, has been the most prominent commercial application. However, mild steel, alloy steel, titanium, bronze, and most metals can be cut cleanly and

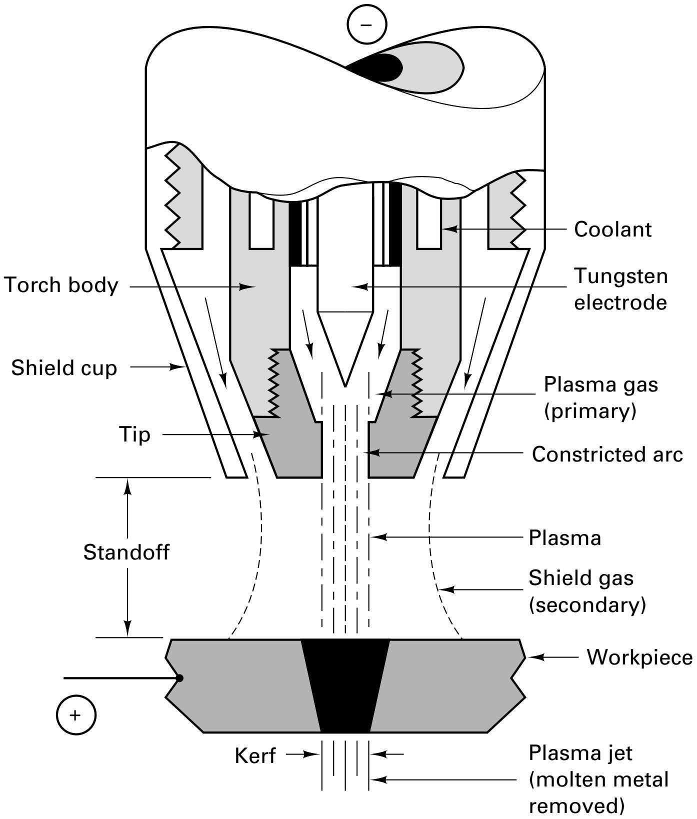

FIGURE 19-29 Plasma arc machining or cutting.

rapidly. Multiple-torch cuts are possible on programmed or tracer-controlled cutting tables on plates up to 6 in. thick in stainless steel. Smooth cuts free from contaminants are a PAC advantage. Well-attached dross on the underside of the cut can be a problem, and there will be a heat-affected zone (HAZ).The depth of the HAZ is a function of the metal, its thickness, and the cutting speed. Surface heat treatment and metal joining are beginning to use the plasma torch. See Chapter 31 for more discussion on plasma arc processes.

Some of the drawbacks of the PAC process include poor tolerances, tapered cuts, and double arcing, leading to premature wear on the nozzle. *Precision PAC*, also called *high-definition plasma* and *fine plasma cutting*, uses a special nozzle, where either a high-flow vortex or a magnetic field causes the plasma to spin rapidly and stabilizes the plasma pressure (Figure 19-30).The fast-spinning plasma results in a finely defined beam

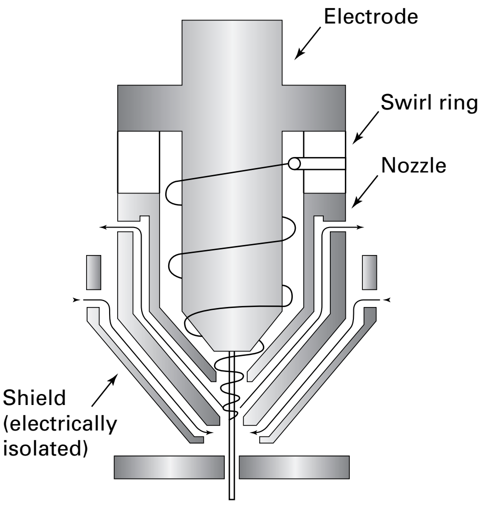

Arc Current Density: 60,000 amps/sq. in.
Kerf Width: ~0.04″ (1 mm) on 1/8″ (3-mm) mild steel

FIGURE 19-30 Precision plasma cutting nozzle.

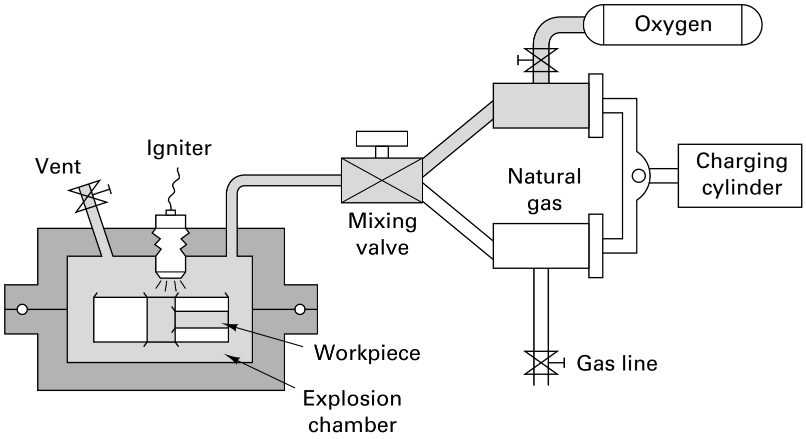

FIGURE 19-31 Thermochemical machining process for the removal of burrs and fins.

that cuts a narrow kerf with a perpendicular edge. Precision PAC also reduces the problems of HAZ and dross on the bottom of parts.

THERMAL DEBURRING

Thermal deburring, also known as the *thermal energy method*, has been developed for the removal of burrs and fins by exposing the workpiece to hot corrosive gases for a short period of time, typically on the order of a few milliseconds (Figure 19-31). The hot gases are formed by combusting (with a spark plug) explosive mixtures of oxygen and fuel (e.g., natural gas) in a chamber holding the workpieces. A thermal shock wave, moving at Mach 8 (2700 m/s; 6000 mph) with temperatures up to 3300°C (6000°F), vaporizes the burr in about 25 milliseconds. Because of the intense heat, the burrs and fins are unable to dissipate the heat fast enough to the surrounding workpiece and, consequently, sublimate. The workpiece remains unaffected and relatively cool because of its low surface-to-mass ratio and the short exposure time. Small amounts of metal are removed from all exposed surfaces, and this must be permissible if the process is to be used. Consequently, while large burrs and fins can be removed with this process, the procedure usually can be used only for removing small burrs. Care must be taken with parts with thin cross sections. Maximum burr thickness should be about the thinnest feature on the workpiece.

Thermal deburring will remove burrs or fins from a wide range of materials, but it is particularly effective with materials of low thermal conductivity, which easily oxidize. It will deburr thermosetting plastics, but not thermoplastic materials. Any workpiece of modest size requiring manual deburring or flash removal should be considered a candidate for thermal deburring. Die castings, gears, valves, rifle bolts, and similar small parts are deburred readily, including blind, internal, and intersecting holes in inaccessible locations. Carburetor parts are processed in automated equipment. The major advantage of thermal deburring is that fine burrs are removed much more quickly and cheaply than if they were removed by hand. Uniformity of results and greater quality assurance over hand deburring are also advantages of thermal deburring. One outcome of thermal deburring is that the part is coated with a fine oxide dust that can be removed easily by solvents. Capital costs can be several hundred thousand dollars, and the maximum workpiece dimensions are on the order of 250 mm (10 in.) by 690 mm (27 in.). See Chapter 36 for additional discussions on deburring.

Key Words

ablate
ball grid arrays
boule
butt lead
chemical blanking/milling
chemical machining (CHM)
chip
chip shooter
clinching
contact printing
Czochralski method
diamond sawing

die yield
doping
electrical discharge machining (EDM)
electrochemical grinding ECG)
electrochemical machining (ECM)
electrochemical polishing
electron-beam machining (EBM)
electronic assembly
electropolishing
electrostream drilling
etch factor
etching
flip-chip
gel milling
gull wing
heat-affected zone (HAZ)
high-definition plasma
integrated circuit (IC)
ion-beam machining (IBM)
J-leads
laser-beam machining (LBM)
maskant
nontraditional machining (NTM)
overcut
overhang
p-type semiconductors
photochemical blanking
photochemical machining (PCM)
photomask
photoresists
pin grid arrays
pin-in-hole
plasma arc cutting (PAC)
plasma etching
precision PAC
printed circuit board
ram EDM
reactive ion etching
screen printing
seed crystal
shaped-tube electrolytic machining (STEM)
solder balls
spark erosion
stepped machining
surface mount
thermal deburring
through-hole
vapor-phase soldering
wafer testing
wafers
wire EDM (WEDM)
wire cutting

Review Questions

1. How do the MRRs for most NTM processes compare to conventional metal cutting?
2. What are the steps in chemical machining using photosensitive resists?
3. Why is it preferable in chemical machining to apply the etchant by spraying instead of immersion?
4. What are the advantages of chemical blanking over regular blanking using punch and die methods?
5. How are multiple depths of cut (steps) produced by chemical machining?
6. Would it be feasible to produce a groove 2 mm wide and 3 mm deep by chemical machining?
7. A drawing calls for making a groove 23 mm wide and 3 mm deep by chemical machining. What should be the width of the opening in the maskant?
8. Could an ordinary steel weldment be chemically machined? Why or why not?
9. How would you produce a tapered section by chemical machining?
10. What is the principal application of thermochemical machining?
11. Is ECM related to chemical machining?
12. What effect does work material hardness have on the metal removal rate in ECM?
13. What is the principal cause of tool wear in ECM?
14. Would electrochemical grinding be a suitable process for sharpening ceramic tools? Why or why not?
15. Upon what factors does the metal removal rate depend in ECM?
16. Why is the tool insulated in the ECM schematic?
17. What is the nature of the surface obtained by electrodischarge machining?
18. What is the principal advantage of using a moving wire electrode in electrodischarge machining?
19. What effect would increasing the voltage have on the metal removal rate in electrodischarge machining? Why?
20. If the metal from which a part is to be made is quite brittle and the part will be subjected to repeated tensile loads, would you select ECM or electro discharge machining for making it? Why or why not?
21. If you had to make several holes in a large number of delicate parts, would you prefer ECM, EDM, EBM, or LBM? Why?
22. What process would you recommend to make many small holes in a very hard alloy where the holes will be used for cooling and venting?
23. Explain (using a little physics and metallurgy) why the “chips” in a thermal process like EDM are often hollow spheres?
24. What is a semiconductor?
25. In general, what technological breakthroughs were necessary to advance to each successive level of integration?
26. What is a silicon *boule*?
27. What is the most complicated, expensive, and critical step in microelectronics manufacturing?
28. List the photolithographic steps necessary to produce a resist mask on a silicon substrate.
29. List four requirements of a photoresist.
30. What is undercutting?
31. What are some possible defects that can result from underetching? From overetching?
32. What is meant by the term *chip* in electronics manufacturing versus EDM?
33. What drives the increase in component density and die area within microelectronic manufacturing?
34. Why are clean rooms so important to microelectronic processing?
35. What two subcomponents make up an IC package?
36. What are the advantages of surface mount technology versus through-hole (or pin-in-hole) technology for attachment of IC packages and discrete electrical components to boards?
37. Name the two key classes of TH packages.
38. Name the four different types of SM lead geometries, and discuss the advantages of each.
39. List the key steps involved in conventional IC packaging.
40. What is a printed circuit board (PCB)?

Chapter 19 CASE STUDY

Fire Extinguisher Pressure Gage

As a materials engineer for the War Eagle Extinguisher Company, Carlos has recently been made aware of several potentially hazardous failures that have occurred in his company's products. Bourdon tube pressure gages (Figure CS-19) are used to monitor the internal pressure of the sodium bicarbonate (dry chemical) fire extinguishers. In several extinguishers, a longitudinal crack has formed along the axis of the bourdon tube, a curved tube of elliptical cross section that has been fabricated from phosphor bronze tubing. These cracks are particularly disturbing for several reasons. First, they allow the fire extinguisher to lose pressure and become inoperable. More significantly, however, the cracks allow the tube to deflect elastically in such a manner that the gage still indicates high internal pressure. Thus, while the extinguisher has actually lost all internal pressure and is useless, the reading on the gage would cause the owner to believe that he still had an operable firefighting device.

Carlos is trying to determine the cause of these failures and suggest appropriate corrective measures. Can you help him?

1. What additional information would you like to have regarding the failed components, their fabrication history, and their service history? Why?
2. What might be some of the possible causes of these failures? What type of evidence would support each possibility? What types of additional tests or investigations might you propose to Carlos.
3. Could these failures have occurred in "normal" use, or is it likely that some form of negligence, abuse, or misuse was involved?
4. What possible corrective or preventative measures might you suggest to Carlos to prevent a recurrence?

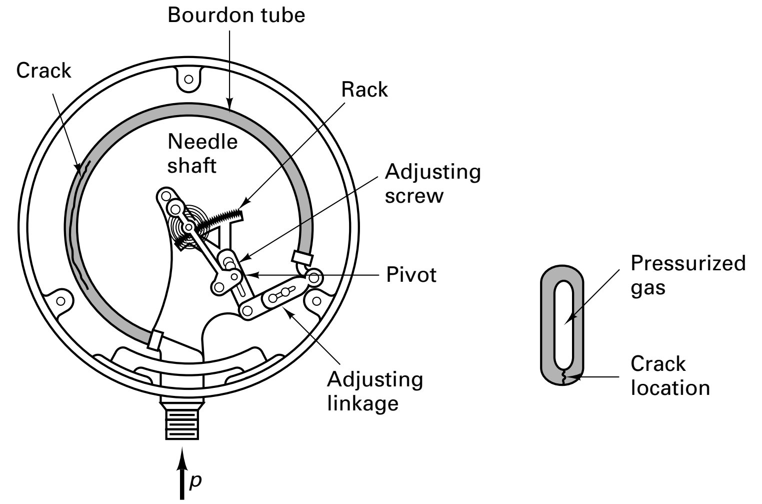

(a) Schematic of a bourdon-tube pressure gage (b) Cross section of bourdon tube

CHAPTER 20

FUNDAMENTALS OF MACHINING/ ORTHOGONAL MACHINING

20.1 INTRODUCTION

Machining is the process of removing unwanted material from a workpiece in the form of chips. If the workpiece is metal, the process is often called *metal cutting* or *metal removal*. U.S. industries annually spend well over $100 billion to perform metal removal operations because the vast majority of manufactured products require machining at some stage in their production, ranging from relatively rough or nonprecision work, such as cleanup of castings or forgings, to high-precision work involving tolerances of 0.0001 in. or less and high-quality finishes. Thus machining undoubtedly is the most important of the basic manufacturing processes.

Beginning with the work of F. W. Taylor at Midvale steel in the 1880s, the process has been the object of considerable research and experimentation that have led to improved understanding of the nature of both the process itself and the surfaces produced by it. While this research effort led to marked improvements in machining productivity, the complexity of the process has resulted in slow progress in obtaining a complete theory of chip formation.

What makes this process so unique and difficult to analyze?

- Prior workhardening greatly affects the process.
- Different materials behave differently.
- The process is asymmetrical and unconstrained, bounded only by the cutting tool.
- The level of strain is very large.
- The strain rate is very high.
- The process is sensitive to variations in tool geometry, tool material, temperature, environment (cutting fluids), and process dynamics (chatter and vibration).

The objective of this chapter is to put all this in perspective for the practicing engineer.

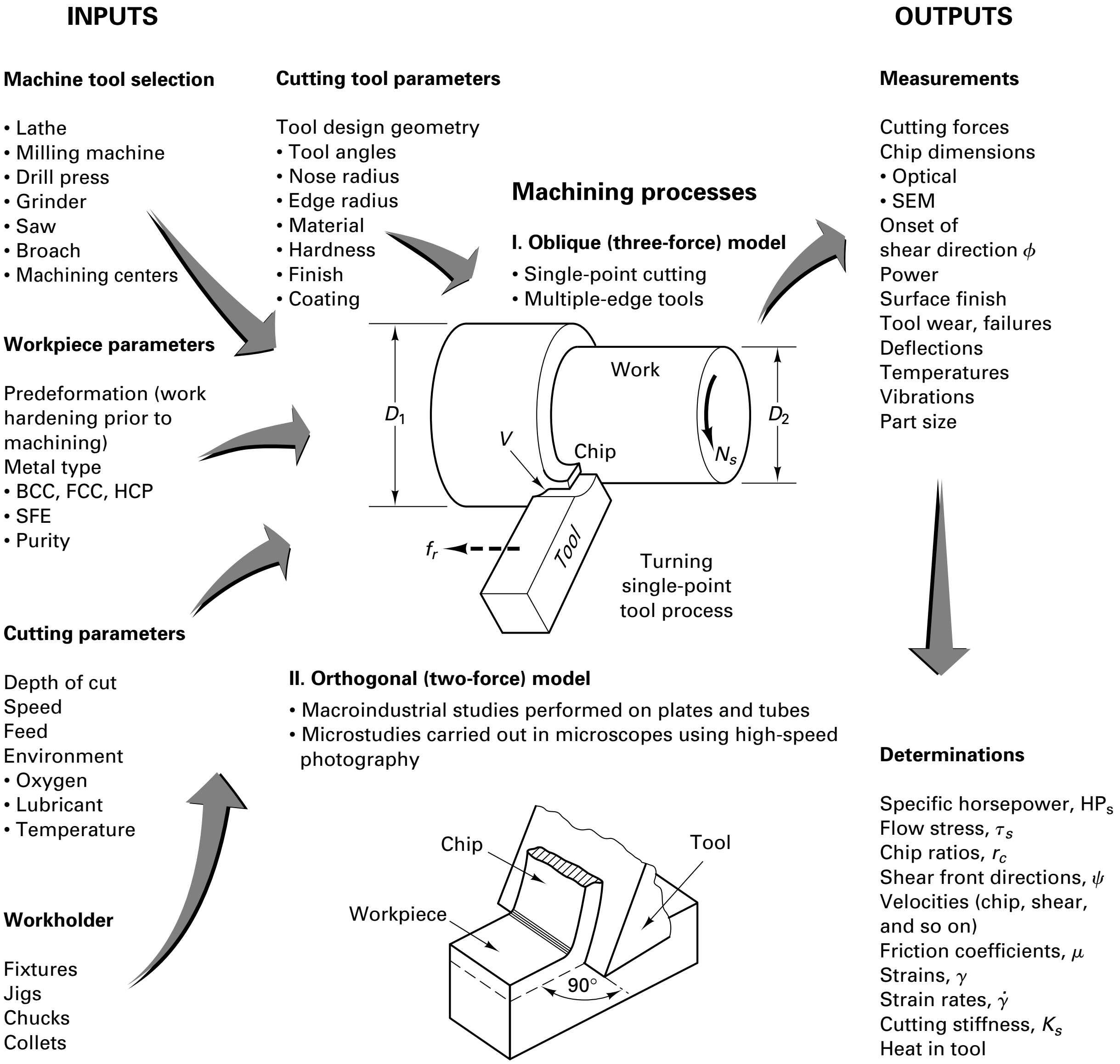

FIGURE 20-1 The fundamental inputs and outputs to machining processes.

20.2 FUNDAMENTALS

The process of metal cutting is complex because it has such a wide variety of inputs, which are listed in Figure 20-1. The variables are:

- The machine tool selected to perform the process
- The cutting tool selected (geometry and material)
- The properties and parameters of the workpiece
- The cutting parameters selected (speed, feed, depth of cut)
- The workpiece holding devices or fixtures or jigs

As we can see from Figure 20-1, the wide variety of inputs creates a host of outputs, most of which are critical to satisfactory performance of the component and product.

There are seven basic chip formation processes (see Figure 20-2): *turning*, *milling*, *drilling*, *sawing*, *broaching*, *shaping (planing)*, *and grinding* (also called *abrasive machining*), discussed in Chapters 22–24 and 26–28. Chapter 25 describe workholding

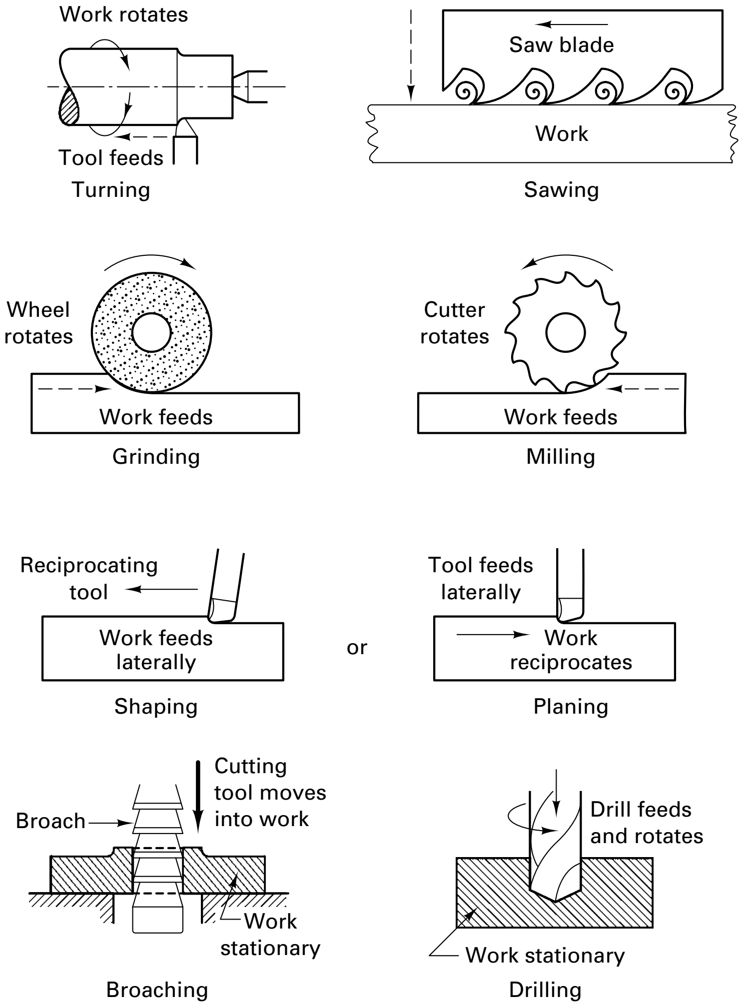

FIGURE 20-2 The seven basic machining processes used in chip formation.

devices and Chapter 21 will provide additional insights on cutting tools. Usually the workpiece material is determined by the design engineer to meet the functional requirements of the part in service. The manufacturing engineer will often have to select the cutting-tool materials and workholder parameters and then cutting parameters based on that work material decision. Let us begin with the assumption that the workpiece material has been selected. To make the component, you decided to use a high-speed steel cutting tool for a turning operation (see Figure 20-3).

For all metal cutting processes, it is necessary to determine the parameters, speed, feed, and depth of cut. The turning process will be used to introduce these terms. In general, *speed (V)* is the primary cutting motion, which relates the velocity of the cutting tool relative to the *workpiece*. It is generally given in units of surface feet per minute (sfpm), inches per minute (in./min), meters per minute (m/m), or meters per second (m/s). *Speed (V)* is shown with the heavy dark arrow. *Feed* (f_r) is the amount of material removed per revolution or per pass of the tool over the workpiece. In turning, feed is in inches per revolution, and the tool feeds parallel to the rotational axis of the workpiece. Depending on the process, feed units are inches per revolution, inches per cycle, inches per minute, or inches per tooth. Feed is shown with dashed arrows. The *depth of cut* (DOC) represents the third dimension. In turning, it is the distance the tool is plunged into the surface. It is half the difference in the initial diameter, D_1, and the final diameter, D_2:

$$\text{DOC} = \frac{D_1 - D_2}{2} = d \qquad (20\text{-}1)$$

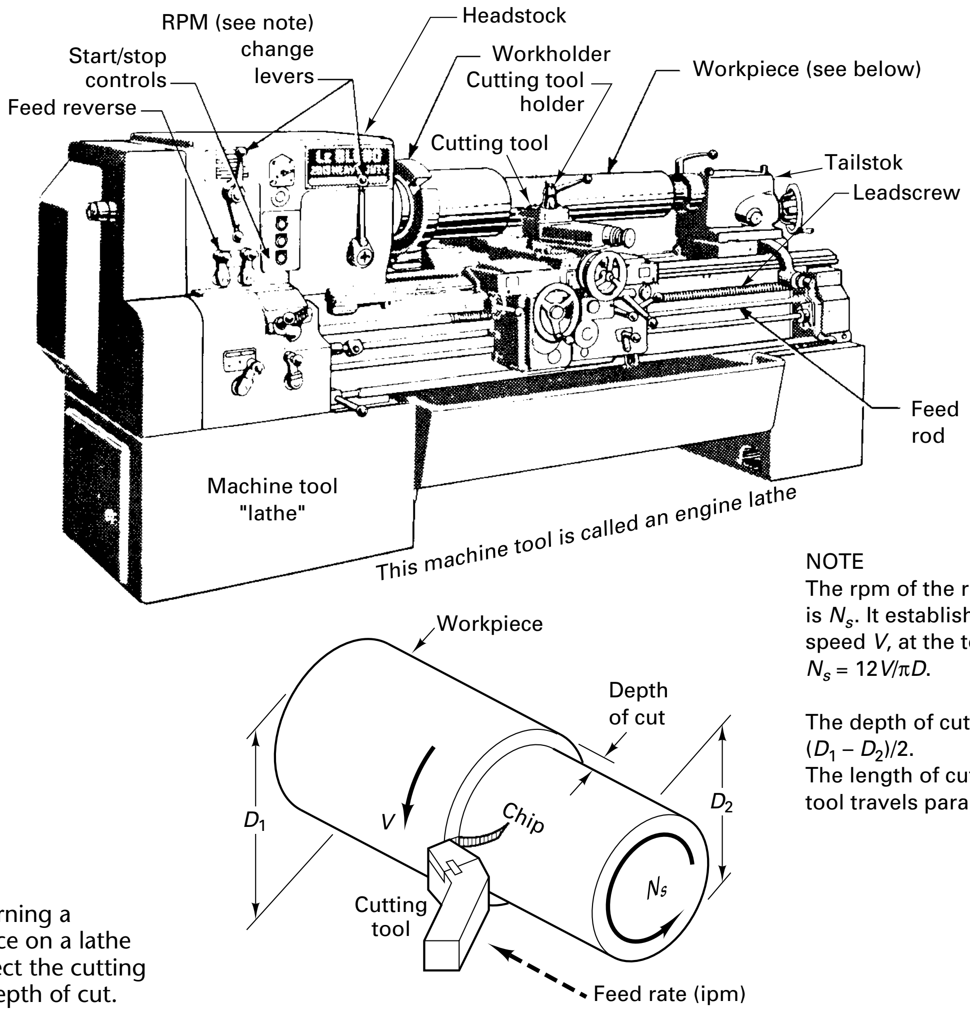

NOTE
The rpm of the rotating workpiece is N_s. It establishes the cutting speed V, at the tool, according to $N_s = 12V/\pi D$.

The depth of cut, d, is equal to $(D_1 - D_2)/2$.
The length of cut is the distance the tool travels parallel to the axis, L.

FIGURE 20-3 Turning a cylindrical workpiece on a lathe requires you to select the cutting speed, feed, and depth of cut.

The selection of the cutting speed V determines the surface speed of the rotating part that is related to the outer diameter of the workpiece.

$$V = \frac{\pi D_1 N_s}{12} \tag{20-2}$$

where D_1 is in inches, V is speed in surface feet per minute, and N_s is the revolutions per minute (rpm) of the workpiece. The input to the lathe will be in revolutions per minute of the spindle.

Figure 20-3 shows a typical *machine tool* for the turning process, a lathe. Workpieces are held in *workholding devices*. (See Chapter 25 for details on the design of workholders.) In this example, a three-jaw chuck is used to hold the workpiece and rotate it against the tool. The chuck is attached to the spindle, which is driven through gears by the motor.

Before the actual values for speed and feed are selected, the cutting-tool material and geometry must be selected. The *cutting tool* is used to machine (i.e., cut) the workpiece and is the most critical component. The geometry of a single point (single cutting edge) of a typical high-speed steel tool used in turning is found in Chapter 21. Various tool geometry is usually ground onto high speed steel blanks, depending on what material is being machined. Figure 20-4, taken from *Metcut's Machinability Data Handbook*, gives the MfE/IE starting values for cutting speed (sfpm or m/min) and feed (ipr or mm/r) for a given depth of cut, a given work material (hardness), and a given process (turning). Notice how speed decreases as DOC or feed increases, and cutting speeds increase with carbide and coated-carbide tool materials. To process different metals, the input parameters to the machine tools must be determined. For the lathe, the input parameters

Turning, Single Point and Box Tools

				High Speed Steel Tool			Carbide Tool						
							Uncoated				Coated		
Material	Hard-ness Bhn	Condition	Depth of Cut* in mm	Speed fpm m/min	Feed ipr mm/r	Tool Material AISI ISO	Speed Brazed fpm m/min	Speed Index-able fpm m/min	Feed ipr mm/r	Tool Material Grade C ISO	Speed fpm m/min	Feed ipr mm/r	Tool Material Grade C ISO
1. FREE MACHINING CARBON STEELS, WROUGHT (cont.) **Medium Carbon Leaded (cont.)** (materials listed on preceding page)	225 to 275	Hot Rolled, Normalized, Annealed, Cold Drawn or Quenched and Tempered	.040	160	.008	M2, M3	500	610	.007	C-7	925	.007	CC-7
			.150	125	.015	M2, M3	390	480	.020	C-6	600	.015	CC-6
			.300	100	.020	M2, M3	310	375	.030	C-6	500	.020	CC-6
			.625	80	.030	M2, M3	.240	290	.040	C-6	—	—	—
			1	**49**	**.20**	**S4, S5**	**150**	**185**	**.18**	**P10**	**280**	**.18**	**CP10**
			4	**38**	**.40**	**S4, S5**	**120**	**145**	**.50**	**P20**	**185**	**.40**	**CP20**
			8	**30**	**.50**	**S4, S5**	**95**	**115**	**.75**	**P30**	**150**	**.50**	**CP30**
			16	**24**	**.75**	**S4, S5**	**73**	**88**	**1.0**	**P40**	—	—	—
	275 to 325	Hot Rolled, Normalized, Annealed or Quenched and Tempered	.040	135	.007	T15, M42[†]	460	545	.007	C-7	825	.007	CC-7
			.150	105	.015	T15, M42[†]	350	425	.020	C-6	525	.015	CC-6
			.300	85	.020	T15, M42[†]	275	380	.030	C-6	425	020	CC-6
			.625	—	—	—	—	—	—	—	—	—	—
			1	**41**	**.18**	**S9, S11[†]**	**140**	**165**	**.18**	**P10**	**250**	**.18**	**CP10**
			4	**32**	**.40**	**S9, S11[†]**	**105**	**130**	**.50**	**P20**	**160**	**.40**	**CP20**
			8	**26**	**.50**	**S9, S11[†]**	**84**	**100**	**.75**	**P30**	**130**	**.50**	**CP30**
			16	—	—	—	—	—	—	—	—	—	—
	325 to 375	Quenched and Tempered	.040	100	.007	T15, M42[†]	390	480	.007	C-7	725	.007	CC-7
			.150	80	.015	T15, M42[†]	300	375	.020	C-6	475	.015	CC-6
			.300	65	.020	T15, M42[†]	230	290	.030	C-6	375	.020	CC-6
			.625	—	—	—	—	—	—	—	—	—	—
			1	**30**	**.18**	**S9, S11[†]**	**120**	**145**	**.18**	**P10**	**220**	**.18**	**CP10**
			4	**24**	**.40**	**S9, S11[†]**	**90**	**115**	**.50**	**P20**	**145**	**.40**	**CP20**
			8	**20**	**.50**	**S9, S11[†]**	**70**	**88**	**.75**	**P30**	**115**	**.50**	**CP30**
			16	—	—	—	—	—	—	—	—	—	—
	375 to 425	Quenched and Tempered	.040	70	.007	T15, M42[†]	325	400	.007	C-7	600	.007	CC-7
			.150	55	.015	T15, M42[†]	250	310	.020	C-6	400	.015	CC-6
			.300	45	.020	T15, M42[†]	200	240	.030	C-6	325	.020	CC-6
			.625	—	—	—	—	—	—	—	—	—	—
			1	**21**	**.18**	**S9, S11[†]**	**100**	**120**	**.18**	**P10**	**185**	**.18**	**CP10**
			4	**17**	**.40**	**S9, S11[†]**	**76**	**95**	**.50**	**P20**	**120**	**.40**	**CP20**
			8	**14**	**.50**	**S9, S11[†]**	**60**	**73**	**.75**	**P30**	**100**	**.50**	**CP30**
			16	—	—	—	—	—	—	—	—	—	—
2. CARBON STEELS, WROUGHT **Low Carbon** 1005 1010 1020 1006 1012 1023 1008 1015 1025 1009 1017	85 to 125	Hot Rolled, Normalized, Annealed or Cold Drawn	.040	185	.007	M2, M3	535	700	.007	C-7	1050	.007	CC-7
			.150	145	.015	M2, M3	435	540	.020	C-6	700	.015	CC-6
			.300	115	.020	M2, M3	340	420	.030	C-6	550	.020	CC-6
			.625	90	.030	M2, M3	265	330	.040	C-6	—	—	—
			1	**56**	**.18**	**S4, S5**	**165**	**215**	**.18**	**P10**	**320**	**.18**	**CP10**
			4	**44**	**.40**	**S4, S5**	**135**	**165**	**.50**	**P20**	**215**	**.40**	**CP20**
			8	**35**	**.50**	**S4, S5**	**105**	**130**	**.75**	**P30**	**170**	**.50**	**CP30**
			16	**27**	**.75**	**S4, S5**	**81**	**100**	**1.0**	**P40**	—	—	—
	125 to 175	Hot Rolled, Normalized, Annealed or Cold Drawn	.040	150	.007	M2, M3	485	640	.007	C-7	950	.007	CC-7
			.150	125	.015	M2, M3	410	500	.020	C-6	625	.015	CC-6
			.300	100	.020	M2, M3	320	390	.030	C-6	500	.020	CC-6
			.625	80	.030	M2, M3	245	305	.040	C-6	—	—	—
			1	**46**	**.18**	**S4, S5**	**150**	**195**	**.18**	**P10**	**290**	**.18**	**CP10**
			4	**38**	**.40**	**S4, S5**	**125**	**150**	**.50**	**P20**	**190**	**.40**	**CP20**
			8	**30**	**.50**	**S4, S5**	**100**	**120**	**.75**	**P30**	**150**	**.50**	**CP30**
			16	**24**	**.75**	**S4, S5**	**75**	**95**	**1.0**	**P40**	—	—	—
	175 to 225	Hot Rolled, Normalized, Annealed or Cold Drawn	.040	145	.007	M2, M3	460	570	.007	C-7	850	.007	CC-7
			.150	115	.015	M2, M3	385	450	.020	C-6	550	.015	CC-6
			.300	95	.020	M2, M3	300	350	.030	C-6	450	.020	CC-6
			.625	75	.030	M2, M3	235	265	.040	C-6	—	—	—
			1	**44**	**.18**	**S4, S5**	**140**	**175**	**.18**	**P10**	**260**	**.18**	**CP10**
			4	**35**	**.40**	**S4, S5**	**115**	**135**	**.50**	**P20**	**170**	**.40**	**CP20**
			8	**29**	**.50**	**S4, S5**	**90**	**105**	**.75**	**P30**	**135**	**.50**	**CP30**
			16	**23**	**.75**	**S4, S5**	**72**	**81**	**1.0**	**P40**	—	—	—
	225 to 275	Annealed or Cold Drawn	.040	125	.007	M2, M3	410	510	.007	C-7	750	.007	CC-7
			.150	95	.015	M2, M3	360	400	.020	C-6	500	.015	CC-6
			.300	75	.020	M2, M3	285	315	.030	C-6	400	.020	CC-6
			.625	60	.030	M2, M3	220	240	.040	C-6	—	—	—
			1	**38**	**.18**	**S4, S5**	**125**	**155**	**.18**	**P10**	**230**	**.18**	**CP10**
			4	**29**	**.40**	**S4, S5**	**110**	**120**	**.50**	**P20**	**150**	**.40**	**CP20**
			8	**23**	**.50**	**S4, S5**	**87**	**95**	**.75**	**P30**	**120**	**.50**	**CP30**
			16	**18**	**.75**	**S4, S5**	**67**	**73**	**1.0**	**P40**	—	—	—

See section 15.1 for Tool Geometry.

*Caution: Check Horsepower requirements on heavier depths of cut.

See section 16 for Cutting Fluid Recommendations.

[†] Any premium HSS (T15, M33, M41–M47) or (S9, S10, S11, S12).

FIGURE 20-4 Examples of a table for selection of speed and feed for turning. *(Source:* Metcut's Machinability Data Handbook.*)*

are DOC, the feed, and the rpm value of the spindle. The rpm value depends on the selection of the cutting speed V. Rewriting equation for N_s:

$$N_s = \frac{12V}{\pi D_1} \cong \frac{3.8V}{D_1} \tag{20-3}$$

Cutting speed, feed, and DOC selection depend on many factors, and a great deal of experience and experimentation are required to find the best combinations. A good place to begin is by consulting tables of recommended values, as shown in Figure 20-4. Most tables are arranged according to the process being used, the material being machined, the hardness, and the cutting-tool material. The table given is a sample, to be used only for solving turning problems in the book. For industrial calculations, standard references listed at the end of the book or cutting-tool manufacturers should be consulted.

This table is for turning processes only. The amount of metal removed per pass determines the DOC. In practice, roughing cuts are heavier than finishing cuts in terms of DOC and feed and are run at a lower surface speed. Note that this table provides recommendations of V and f_r in both English and metric units based on the DOC needed to perform the job. Table values are usually conservative and should be considered starting points for determining the operational parameters for a process.

Once cutting speed V has been selected, equation 20-3 is used to determine the spindle rpm, N_s. The speed and feed can be used with the DOC to estimate the metal removal rate for the process, or MRR. For turning, the MRR is

$$\text{MRR} \cong 12Vf_r d \tag{20-4}$$

This is an approximate equation for MRR. For turning, MRR values can range from 0.1 to 600 in.^{3}/min. The MRR can be used to estimate the horsepower needed to perform a cut, as will be shown later. For most processes, the MRR equation can be viewed as the

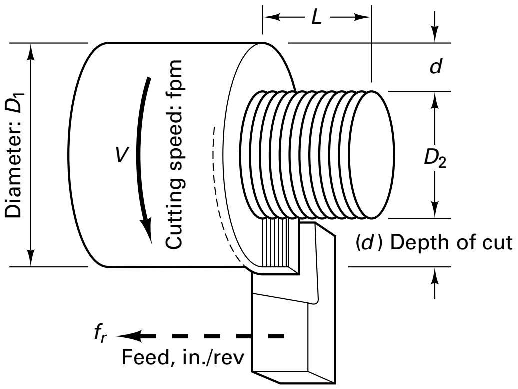

Turning

Speed, stated in surface feet per minute (sfpm), is the peripheral speed at the cutting edge. Feed per revolution in turning is a linear motion of the tool parallel to the rotating axis of the workpiece. The depth of cut reflects the third dimension.

L = length of cut

$$T_m = \frac{L + A}{f_r N_s}$$

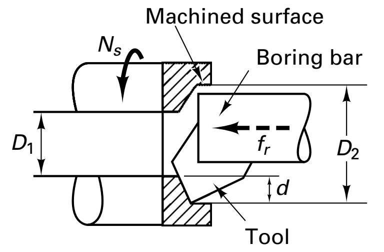

Boring

Enlarging hole of diameter D_1 to diameter D_2. Boring can be done with multiple cutting tools. Feed in inches per revolution, f_r.

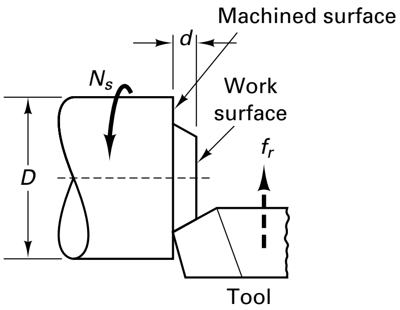

Facing

Tool feeds to center of workpiece so $L = D/2$. The cutting speed is decreasing as the tool approaches the center of the workpiece.

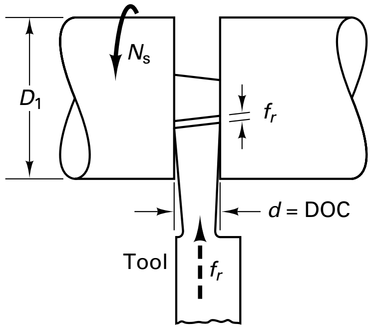

Grooving, parting, or cutoff

Tool feed perpendicular to the axis of rotation. The width of the tool produces the depth of cut (DOC).

FIGURE 20-5 Relationship of speed, feed, and depth of cut in turning, boring, facing, and cutoff operations typically done on a lathe.

volume of metal removed divided by the time needed to remove it

$$\text{MRR} = \frac{\text{volume of cut}}{T_m}$$

where T_m is the cutting time in minutes. For turning, the cutting time depends upon the length of cut L divided by the rate of traverse of the cutting tool past the rotating workpiece $f_r N_s$, as shown in Figure 20-5. Therefore,

$$T_m = \frac{L + \text{allowance}}{f_r N_s} \tag{20-5}$$

An allowance is usually added to the L term to allow for the tool to enter and exit the cut.

Turning is an example of a single-point tool process, as is shaping. Milling and drilling are examples of multiple-point tool processes. Figures 20-5 through 20-9 show the basic process schematically. Speed (V) is shown in these figures with a dark heavy arrow. Feed (f) is the amount of material removed per pass of the tool over the workpiece and is shown as a dashed arrow.

For many of the basic processes, the equations for T_m and MRR are given. These equations are commonly referred to as *shop equations* and are as fundamental as the processes themselves, so the student should be as familiar with them as with the basic processes. If one keeps track of the units and visualizes the process, the equations are, for the most part, straightforward. See Table 20-1 for summary.

In addition to turning, other operations can be performed on the lathe. For example, as shown in Figure 20-5, a flat surface on the rotating part can be produced by facing or a cutoff operation. Boring can produce an enlarged hole, and grooving puts a slot in the workpiece.

The process of milling requires two figures because it takes different forms

TABLE 20-1 Shop Formulas for Turning, Milling, Drilling, and Broaching (English Units)

Parameter	Turning	Milling	Drilling	Broaching
Cutting speed, fpm	$V = 0.262 \times D_1 \times$ rpm	$V = 0.262 \times D_m \times$ rpm	$V = 0.262 \times D_d \times$ rpm	V
Revolutions per minute, N_s	rpm $= 3.82 \times V_c/D_1$	rpm $= 3.82 \times V_c/D_m$	rpm $= 3.82 \times V_c/D_d$	—
Feed rate, in./min	$f_m = f_r \times$ rpm	$f_m = f_r \times$ rpm	$f_m = f_r \times$ rpm	—
Feed per rev tooth pass, in./rev	f_r	f_t	f_r	—
Cutting time, min, T_m	$T_m = L/f_m$	$T_m = L/f_m$	$T_m = L/f_m$	$T_m = L/12V$
Rate of metal removal, in.^{3}/min	MRR $= 12 \times d \times f_r \times V_c$	MRR $= w \times d \times f_m$	MRR $= \pi D^2 d/4 \times f_m$	MRR $= 12 \times w \times d \times V$
Horsepower required at spindle	hp = MRR × HP_s	hp = MRR × HP_s	hp = MRR × HP_s	—
Horsepower required at motor	hp_m = MRR × HP_s/E	hp_m = MRR × HP_s/E	hp_m = MRR × HP_s/E	hp_m = MRR × HP_s/E
Torque at spindle	$t_s = 63{,}030$ hp/rpm	$t_s = 63{,}030$ hp/rpm	$t_s = 63{,}030$ hp/rpm	—
Symbols	D_1 = Diameter of workpiece in turning, inches D_m = Diameter of milling cutter, inches D_d = Diameter of drill, inches d = Depth of cut, inches E = Efficiency of spindle drive f_m = Feed rate, inches per minute f_r = Feed, inches per revolution f_t = Feed, inches per tooth hp_m = Horsepower at motor MRR = Metal removal rate, in.^{3}/min		hp = horsepower at spindle L = Length of cut, inches n = Number of teeth in cutter HP_s = Unit power, horsepower per cubic inch per minute, specific horsepower N_s = Revolution per minute of work or cutter t_s = Torque at spindle, inch-pound T_m = Cutting time, minutes V = Cutting speed, feet per minute w = Width of cut, inches	

Values for specific horsepower (unit power) are given in Table 20-4.

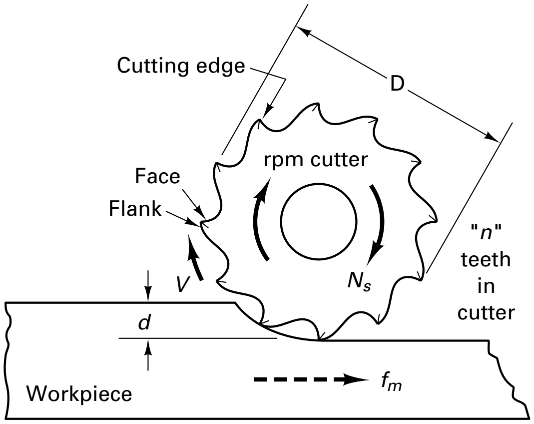

Slab milling – multiple tooth

Slab milling is usually performed on a horizontal milling machine. Equations for T_m and MRR derived in Chapter 25.

The tool rotates at rpm N_s. The workpiece translates past the cutter at feed rate f_m, the table feed. The length of cut, L, is the length of workpiece plus allowance, L_A,

$$L_A = \sqrt{\frac{D^2}{4} - \left(\frac{D}{2} - d\right)^2} = \sqrt{d(D-d)} \text{ inches}$$

$$T_m = (L + L_A)/f_m$$

The MRR = Wdf_m where W = width of the cut and d = depth of cut.

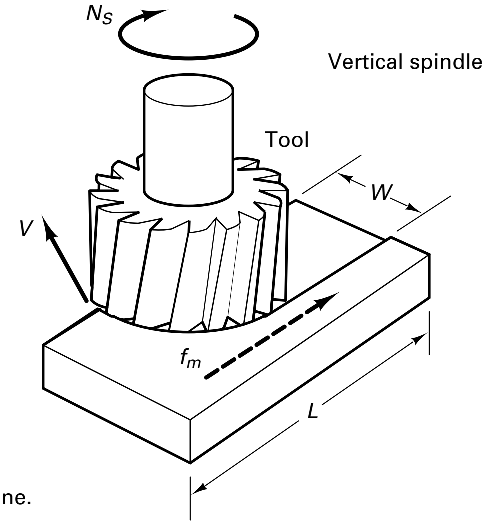

Face milling
Multiple-tooth cutting

Given a selected cutting speed V and a feed per tooth f_t, the rpm of the cutter is $N_s = 12V/\pi D$ for a cutting of diameter D. The table feed rate is $f_m = f_t n N_s$ for a cutter with n teeth.
The cutting time, $T_m = (L + L_A + L_o)/f_m$
where $L_o = L_A = \sqrt{W(D - W)}$ for $W < D/2$
or $L_o = L_A = D/2$ for $W \geqslant D/2$.
The MRR = Wdf_m where d = depth of cut.

FIGURE 20-6 Basics of milling processes (slab, face, and end milling) including equations for cutting time and metal removal rate (MRR).

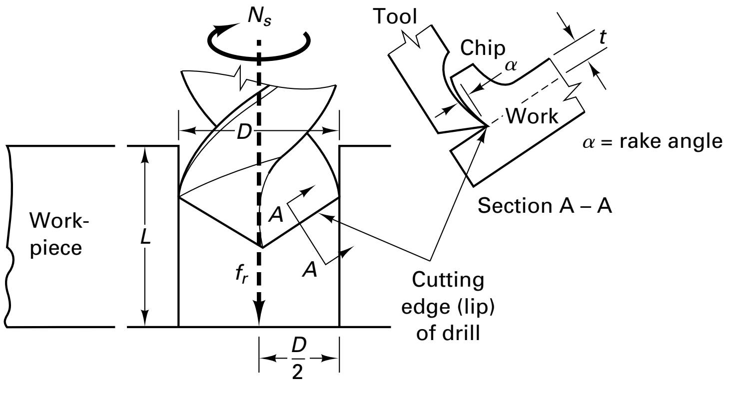

Drilling multiple-edge tool

Select cutting speed V, fpm and feed, f_r, in./rev. Select drill.
D = diameter of the drill which rotates 2 cutting edges at rpm N_s. V = velocity of outer edge of the lip of the drill.
$N_s = 12V/\pi D$. T_m = cutting time = $(L + A)/f_r N_s$ where f_r is the feed rate in in. per rev. The allowance $A = D/2$.
The MRR = $(\pi D^2/4) f_r N_s$ in.^{3}/min which is approximately $3DVf_r$.

FIGURE 20-7 Basics of the drilling (hole-making) processes, including equations for cutting time and metal removal rate (MRR).

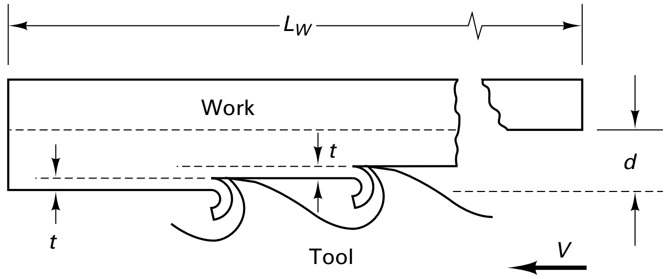

FIGURE 20-8 Process basics of broaching. Equations for cutting time and metal removal rate (MRR) are developed in Chapter 26.

The T_m for broaching is $T_m = L/12V$. The MRR (per tooth) is $12tWV$ in.^{3}/min where V = cutting velocity in fpm, W is the width of cut, t = rise per tooth.

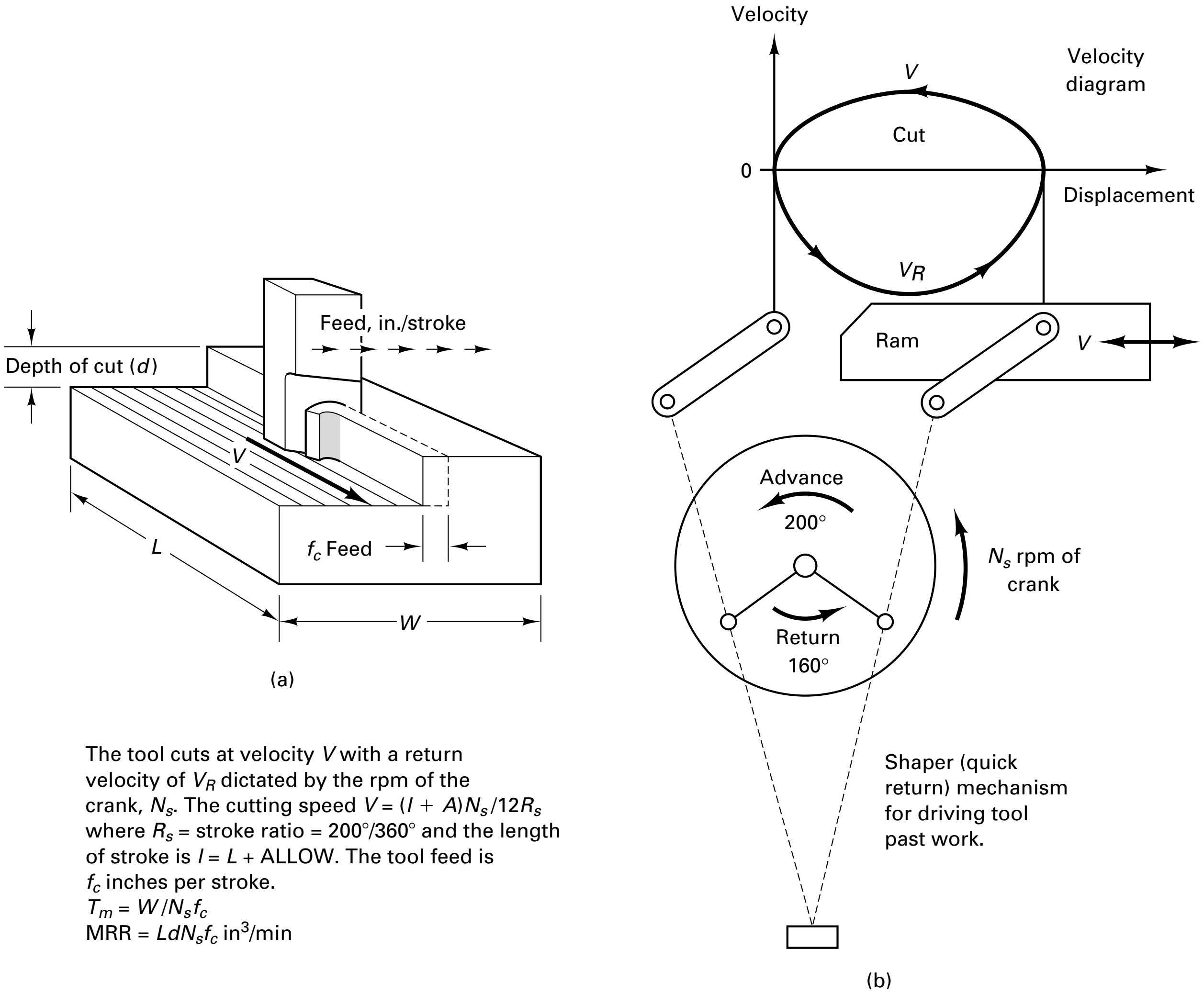

The tool cuts at velocity V with a return velocity of V_R dictated by the rpm of the crank, N_s. The cutting speed $V = (l + A)N_s/12R_s$ where R_s = stroke ratio = 200°/360° and the length of stroke is $l = L + \text{ALLOW}$. The tool feed is f_c inches per stroke.
$T_m = W/N_s f_c$
MRR = $LdN_s f_c$ in^3/min

Shaper (quick return) mechanism for driving tool past work.

FIGURE 20-9 (a) Basics of the shaping process, including equations for cutting time (T_m) and metal removal rate (MRR). (b) The relationship of the crank rpm N_s to the cutting velocity V.

depending on the selection of the machine tool and the cutting tool. Milling, a multiple-tooth process, has two feeds: the amount of metal an individual tooth removes, called the feed per tooth f_t, and the rate at which the table translates past the rotating tool, called the table feed rate f_m, in inches per minute. It is calculated from

$$f_m = f_t n N_s \tag{20-6}$$

where n is the number of teeth in a cutter and N_s is the rpm value of the cutter. Just as was shown for turning, standard tables of speeds and feeds for milling provide values for the recommended cutting speeds and feeds per tooth, f_t.

Operation	Block diagram	Most commonly used machines	Machines less frequently used	Machines seldom used
Turning	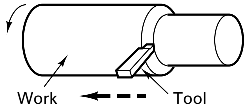	Lathe NC lathe machining center	Boring mill	Turret lathe
Grinding	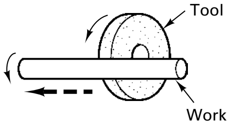	Cylindrical grinder		Lathe (with special attachment)
Sawing (of plates and sheets)	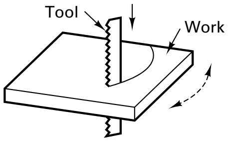	Contour or band saw	Laser Flame cutting Plasma arc	
Drilling	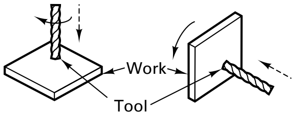	Drill press Machining center (nc) Vert. milling machine	Lathe Horizontal boring machine	Horizontal milling machine Boring mill
Boring	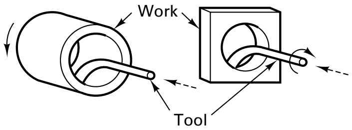	Lathe Boring mill Horizontal boring machine Machining center		Milling machine Drill press
Reaming	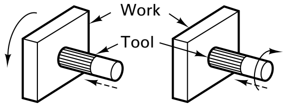	Lathe Drill press Boring mill Horizontal boring machine Machining center	Milling machine	
Grinding	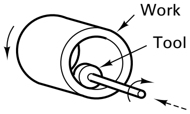	Cylindrical grinder		Lathe (with special attachment)
Sawing	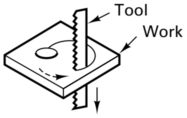	Contour or band saw		
Broaching	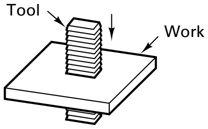	Broaching machine	Arbor press (keyway broaching)	

FIGURE 20-10 Operations and machines used for machining cylindrical surfaces.

Figure 20-10 provides an overview of the basic machining processes in terms of typical machine tools that can generate cylindrical surfaces. Figure 20-11 provides an overview of the basic processes that can generate flat surfaces. Table 20-2 provides a summary on typical sizes (min–max), the production rates (part/hour), tolerances (precision or repeatability), and surface finish (roughness). Milling has pretty much replaced shaping and planing, although gear shaping is still a viable process. Milling combined with

Operation	Block diagram	Most commonly used machines	Machines less frequently used	Machines seldom used
Facing	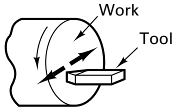	Lathe	Boring mill	
Broaching	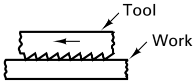	Broaching machine		Turret broach
Grinding	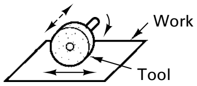	Surface grinder		Lathe (with special attachment)
Sawing	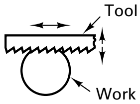	Cutoff saw	Contour saw	
Shaping	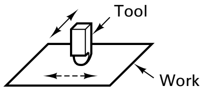	Horizontal shaper	Vertical shaper	
Planing	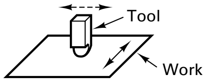	Planer		
Milling	slab milling 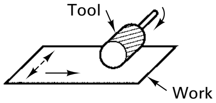	Milling machine	Lathe with special milling tools	
	face milling 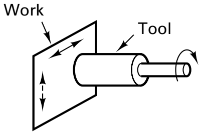	Milling machine Machining center	Lathe with special milling tools	Drill press (light cuts)

FIGURE 20-11 Operations and machines used to generate flat surfaces.

other rotational multiple-edge tool processes (drilling or reaming) is often performed in machining centers rather than on milling machines. The turret lathe has been replaced by CNC turning centers[1] with multiple turrets in many factories.

■ 20.3 ENERGY AND POWER IN MACHINING

Most of the cutting operations process described to this point are examples of oblique, or three-force, cutting. The cutting force system in a conventional, oblique-chip formation process is shown schematically in Figure 20-12. Oblique cutting has three components:

1. F_c: Primary cutting force acting in the direction of the cutting velocity vector. This force is generally the largest force and accounts for 99% of the power required by the process.
2. F_f: Feed force acting in the direction of the tool feed. This force is usually about 50% of F_c but accounts for only a small percentage of the power required because feed rates are usually small compared to cutting speeds.
3. F_r: radial or thrust force acting perpendicular to the machined surface. This force is typically about 50% of F_r and contributes very little to power requirements because velocity in the radial direction is negligible. Figure 20-12 shows the general relationship between these forces and changes in speed, feed, and depth of cut. Note that these figures cannot be used to determine forces for a specific process.

---

[1] Machining centers and turning centers are NC or CNC machines, discussed in Chapter 27.

TABLE 20-2 Basic Machining Process

Applicable Process	Raw Material Form	Size		Typical Production Rate	Material Choice	Typical Tolerance	Typical Surface Roughness
		Maximum	Minimum				
Turning (engine lathes)	Cylinders, preforms, castings, forgings	78 in. dia. × 73 in. long	$\frac{1}{64}$ in. typical	1–10 parts/hour	All ferrous and nonferrous material considered machinable	±0.002 in. on dia. common; ±0.001 in. obtainable	125–250
Turning (CNC)	Bar, rod, tube, preforms	36 in. dia. × 93 in. long	$\frac{1}{64}$ in. dia.	1–2 parts/minute to 1–4 parts/hour	Any material with good machinability rating	±0.001 in. on dia. where needed; ±0.0005 in. possible	63 or better
Turning (automatic screw machine)	Bar, rod	Generally 2 in. dia. × 6 in. long	$\frac{1}{16}$ in. dia. and less, weight less than 1 ounce	10–30 parts/minute	Any material with good machinability rating ±0.001 to ±0.003 in.	±0.0005 in. possible ±0.001 to ±0.003 in. common	63 average
Turning (Swiss automatic machining)	Rod	Collets adapt to $\frac{1}{2}$ in. dia.	Collets adapt to less than $\frac{1}{2}$ in.	12–30 parts/minute	Any material with good machinability rating	±0.0002 in. to ±0.001 in. common	63 and better
Boring (vertical)	Casting, preforms	98 in. × 72 in.	2 in. × 12 in.	2–20 hours/piece	All ferrous and nonferrous	±0.0005 in.	90–250
Milling	Bar, plate, rod, tube	4–6 ft long	Limited usually by ability to hold part	1–100 parts/hour	Any material with good machinability rating	±0.0005 in. possible; ±0.001 in. common	63–250
Hobbing (milling gears)	Blanks, preforms, rods	10-ft-dia. gears 14-in. face width	0.100 in. dia.	1 part/minute	Any material with good machinability rating	±0.001 in. or better	63
Drilling	Plate, bar, preforms	$3\frac{1}{2}$-in.-dia.drills (1-in.-dia. normal)	0.002-in. drill dia.	2-20 second/hole after setup	Any unhardened material; carbides needed for some case-hardened parts	±0.002–±0.010 in. common; ±0.001 in. possible	63–250
Sawing	Bar, plate, sheet	2-in. armor plate $\frac{1}{2}$ in. is preferred)	0.010 in. thick	3–30 parts/hour	Any nonhardened material;	±0.015 in. possible	250–1000
Broaching	Tube, rod, bar, plate	74 in. long	1 in.	300–400 parts/minute	Any material with good machinability rating	±0.0005–±0.001 in.	32–125
Grinding	Plate, rod, bars	36 in. wide × 7 in. dia.	0.020 in. dia.	1–1000 pieces/hour	Nearly all metallic materials plus many nonmetallic	0.0001 in. and less	16
Shaping	Bar, plate, casting	3 ft × 6 ft	Limited usually by ability to hold part	1–4 parts/hour	Low-to medium-carbon steels and nonferrous metals best; no hardened parts	±0.001–±0.002 in. (larger parts) ±0.0001–±0.0005 in. (small–medium parts)	63–250
Planing	Bar, plate, casting	42 ft wide × 18 ft high × 76 ft long	Parts too large for shaper work	1 part/hour	Low- to medium-carbon steels or nonferrous materials best	±0.001–±0.005 in.	63–125
Gear shaping	Blanks	120-in.-dia. gears 6-in. face widh	1 in. dia.	1–60 parts/hour	Any material with good machinability rating	±0.001 in. or better at 200 D.P. to 0.0065 in. at 30 D.P.	63

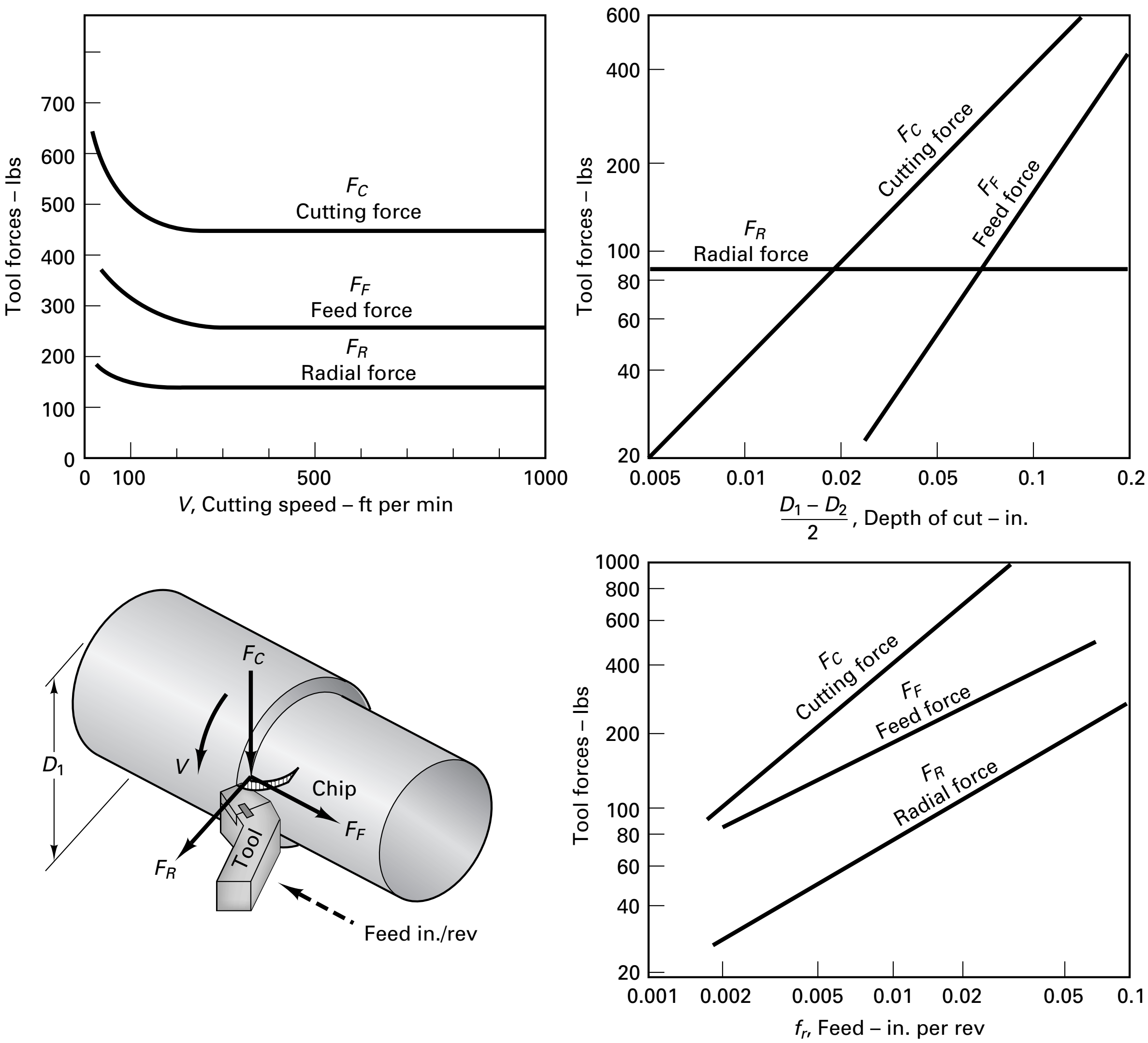

FIGURE 20-12 Oblique machining has three measurable components of forces acting on the tool. The forces vary with speed, depth of cut, and feed.

3 Force

F_C = Cutting force (vertical)
F_R = Radial force (thrust)
F_F = Feed force

The power required for cutting is

$$P = F_c V (\text{ft-lb/min}) \tag{20-7}$$

The horsepower at the spindle of the machine is therefore

$$\text{hp} = \frac{F_c V}{33{,}000} \tag{20-8}$$

In metal cutting a very useful parameter is called the unit, or specific, horsepower HP_s, which is defined as

$$\text{HP}_s = \frac{\text{hp}}{\text{MRR}} (\text{hp/in.}^3/\text{min}) \tag{20-9}$$

In turning, for example, where MRR $\cong 12Vf_r d$, then

$$\mathrm{HP_s} = \frac{F_c}{396{,}000 f_r d} \tag{20-10}$$

Thus this term represents the approximate power needed at the spindle to remove a cubic inch of metal per minute.

Values for specific horsepower $\mathrm{HP_s}$, which is also called unit power, are given in Table 20-3. These values are obtained through orthogonal metalcutting experiments described later in this chapter.

TABLE 20-3 Values for Unit Power and Specific Energy (cutting stiffness)

Material		Unit Power (hp-min. in.^{3}) $\mathrm{HP_s}$	Specific Energy (in.-lb/in.^{3}) K_s or U	Hardness Brinell HB
Nonalloy carbon steel	C 0.15%	.58	268,000	125
	C 0.35%	.58	302,400	150
	C.0.60%	.75	324,800	200
Alloy steel	Annealed	.50	302,400	180
	Hardened and tempered	0.83	358,400	275
	Hardened and tempered	0.87	392,000	300
	Hardened and tempered	1.0	425,000	350
High-alloy steel	Annealed	0.83	369,000	200
	Hardened	1.2	560,000	325
Stainless steel, annealed	Martensitic/ferritic	0.75	324,800	200
Steel castings	Nonalloy	0.62	257,000	180
	Low-alloy	0.67	302,000	200
	High-alloy	0.80	336,000	225
Stainless steel, annealed	Austenitic	0.73	369,600	180
Heat-resistant alloys	Annealed	0.78		200
	Aged—Iron based	—		280
	Annealed—Nickel or cobalt	1.10		250
	Aged	1.20		350
Hard steel	Hardened steel	1.4	638,400	55 HRC
	Manganese steel 12%	1.0	515,200	250
Malleable iron	Ferritic	0.42	156,800	130
	Pearlitic	—	257,600	230
Cast iron, low tensile		0.62	156,800	180
Cast iron, high tensile		0.80	212,800	260
Nodular SG iron	Ferritic	0.55	156,800	160
	Pearlitic	0.76	257,600	250
Chilled cast iron		—	492,800	400
Aluminum alloys	Non-heat-treatable	.25	67,200	60
	Heat-treatable	.33	100,800	100
Aluminum alloys (cast)	Non-heat-treatable	.25	112,000	75
	Heat-treatable	.33	123,200	90
Bronze-brass alloys	Lead alloys, Pb>1%	.25	100,800	110
	Brass, cartridge brass	1.8–2.0	112,000	90
	Bronze and lead-free copper	0.33–0.83		
	Includes Electrolytic copper	0.90	246,400	100
Zinc alloy	Diecast	0.25	—	—
Titanium		.034	250-275	

Values assume normal feed ranges and sharp tools. Multiply values by 1.25 for a dull tool.

Calculation of unit power ($\mathrm{HP_s}$)

$\mathrm{HP} = F_c V/33000$

$\mathrm{HP}_s = \mathrm{HP}/\mathrm{MRR}$ Where

$\mathrm{MRR} = 12Vtw$ for tube turning

$\mathrm{HP}_s = F_c V/12Vtw \times 33000 = F_c/tw \times 396000$

Calculation of specific energy (U)

$U = F_c V/Vtw = F_c/tw$ for tube turning

Specific power can be used in a number of ways. First, it can be used to estimate the motor horsepower required to perform a machining operation for a given material. $\mathrm{HP_s}$ values from the table are multiplied by the approximate MRR for the process. The motor horsepower $\mathrm{HP_m}$, is then

$$\mathrm{HP_m} = \frac{\mathrm{HP_s} \times \mathrm{MRR} \times CF}{E} \tag{20-11}$$

where E is the efficiency of the machine. The E factor accounts for the power needed to overcome friction and inertia in the machine and drive moving parts. Usually, 80% is used. Usually the maximum MRR is used in this calculation. Correction factors (*CF*s) may also be used to account for variations in cutting speed, feed, and rake angle. There is usually a tool wear correction factor of 1.25, used to account for the fact that dull tools use more power than sharp tools.

The primary cutting force F_c can be roughly estimated according to

$$F_c \cong \frac{\mathrm{HP_s} \times \mathrm{MRR} \times 33{,}000}{V} \tag{20-12}$$

This type of estimate of the major force F_c is useful in analysis of deflection and vibration problems in machining and in the proper design of workholding devices, because these devices must be able to resist movement and deflection of the part during the process.

In general, increasing the speed, the feed, or the depth of cut will increase the power requirement. Doubling the speed doubles the horsepower directly. Doubling the feed or the depth of cut doubles the cutting force F_c. In general, increasing the speed does not increase the cutting force F_c, a surprising experimental result. However, speed has a strong effect on tool life because most of the input energy is converted into heat, which raises the temperature of the chip, the work, and the tool, to the latter's detriment. Tool life (or tool death) is discussed in Chapter 22.

Equation 20-12 can be used to estimate the maximum depth of cut, d, for a process as limited by the available power.

$$d_{\max} = \frac{\mathrm{HP_m} \times E}{12\mathrm{HP_s}\, V F_r\, (CF)} \tag{20-13}$$

Another handbook value useful in chatter or vibration calculations is cutting stiffness K_s. In this text, the term *specific energy U* will be used interchangeably with cutting stiffness K_s.

It is interesting to compute the total specific energy in the process and determine how it is distributed between the primary shear and the secondary shear that occurs at the interface between the chip and the tool. It is safe to assume that the majority of the input energy is consumed by these two regions.
Therefore,

$$U = U_s + U_f \tag{20-14}$$

where specific energy (also called cutting stiffness) is

$$U = \frac{F_c V}{V f_r d} = \frac{F_c}{f_r d} = K_s \text{ (turning)} \tag{20-15}$$

The specific shear energy is

$$U_s = \frac{F_c V_s}{V f_r d} \tag{20-16}$$

where V_s is the shear velocity and F_s is the shear force.
Specific friction energy is

$$U_f = \frac{F V_c}{V f_r d} = \frac{F r_c}{f_r d} \tag{20-17}$$

where V_c is the chip velocity and r_c is the chip thickness ratio. See equation 20-18 for the calculation of r_c.

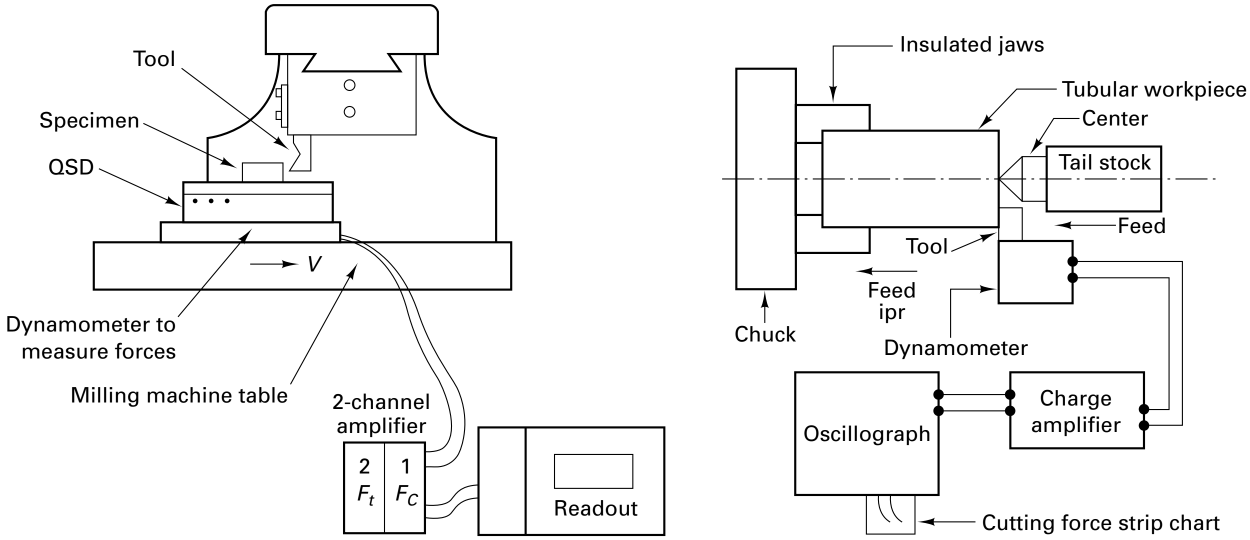

(a) OPM *V* (Front view) See Figure 21-14

(b) OTT (Top view) See Figure 21-15

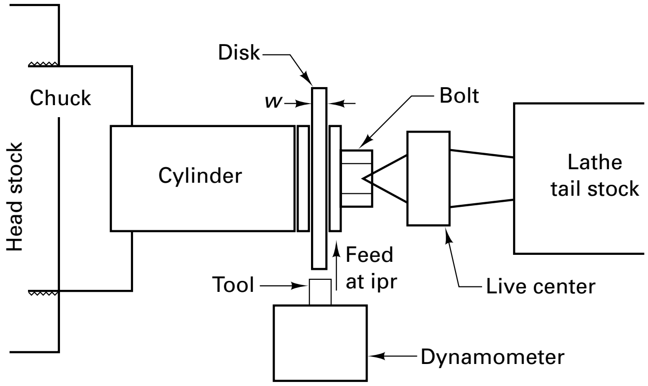

(c) ODM (Top view)

FIGURE 20-13 Three ways to perform orthogonal machining. (a) Orthogonal plate machining on a horizontal milling machine, good for low-speed cutting. (b) Orthogonal tube turning on a lathe; high-speed cutting (see Figure 20-16). (c) Orthogonal disk machining on a lathe; very high-speed machining with tool feeding (ipr) in the facing direction.

Usually, 30 to 40% of the total energy goes into friction and 60 to 70% into the shear process.

Typical values for *U* are given in Table 20-3. This is experimental data developed by the orthogonal machining experiment described in the next section.

20.4 ORTHOGONAL MACHINING (TWO FORCES)

Orthogonal machining (OM) is carried out mostly in research laboratories, in order to better understand this complex process. In OM, the tool geometry is simplified from the three-dimensional (oblique) geometry, as shown in Figure 20-1.

Using this simplified tool geometry, metals can be cut to test machining mechanics and theory. There are basically three orthogonal machining setups, as shown in Figure 20-13.

1. Orthogonal Plate Machining a plate in a milling machine—low-speed cutting
2. Orthogonal Tube Turning end-cutting a tube wall in a turning setup—medium-speed ranges
3. Orthogonal Disk Machining end-cutting a plate feeding in a facing direction—high-speed cutting

In *oblique* machining, as in shaping, drilling, and single-point turning, the cutting edge and the cutting motion are not perpendicular to each other. In the orthogonal case, the cutting velocity vector and the cutting edge are perpendicular. The OPM low-speed

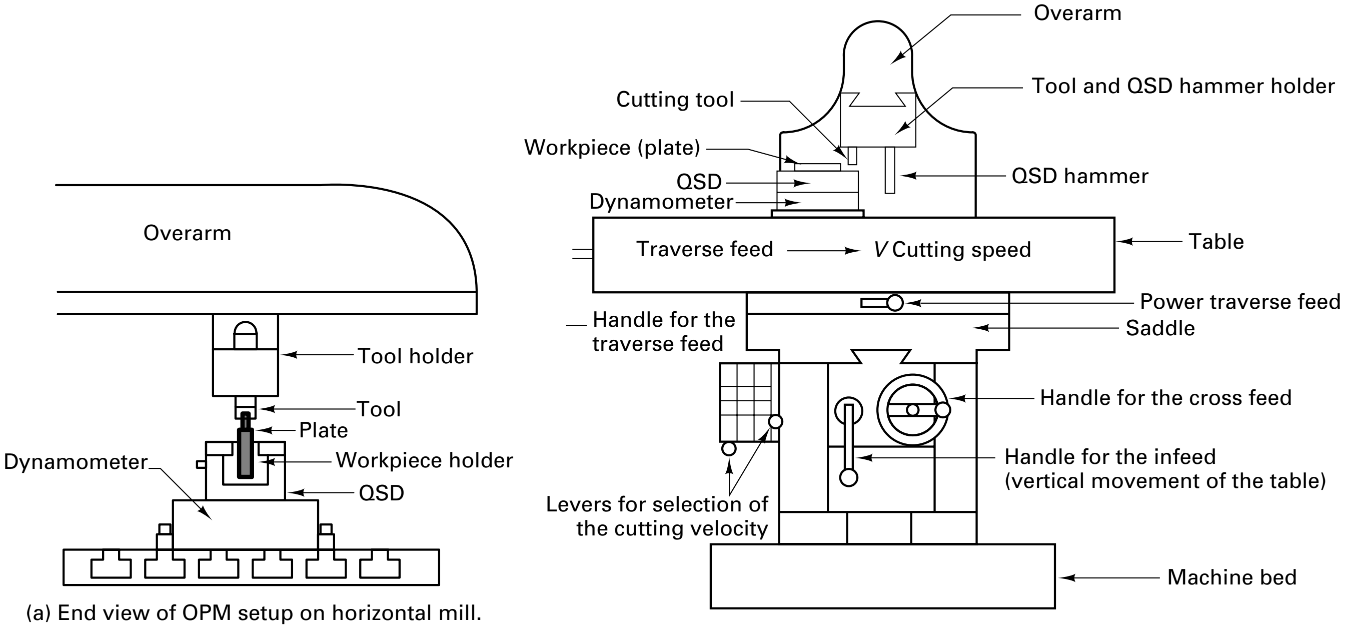

(a) End view of OPM setup on horizontal mill. Table feed is used for cutting speed.

(b) Horizontal milling setup for OPM using QSD. Front view.

FIGURE 20-14 Schematics of the orthogonal plate machining setups. (a) End view of table, quick-stop device (QSD), and plate being machined for OPM. (b) Front view of horizontal milling machine. (c) Orthogonal plate machining with fixed tool, moving plate. The feed mechanism of the mill is used to produce low cutting speeds. The feed of the tool is *t* and the DOC is *w*, the width of the plate.

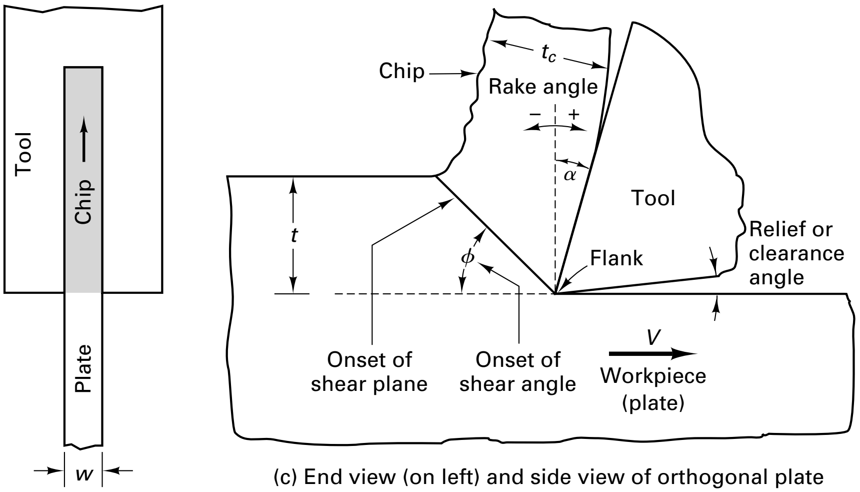

(c) End view (on left) and side view of orthogonal plate machining with fixed tool and moving plate.

plate machining is shown in more detail in Figure 20-14, using a modified horizontal milling machine where the table traverse provides the cutting speed and the tool is mounted in a tool holder in the overarm. As shown in Figure 20-15, OTT can be done on solid cylinders that have had a groove machined on the end to form a tube wall w, or a tubular workpiece can be used. The tubular workpieces can be mounted in a lathe and normal cutting speeds developed for the machining experiment. This setup has the advantage of being very easy to modify so that cutting-temperature experiments can be performed, using the tool/chip thermocouple method. The orthogonal case is more easily modeled for temperature experiments. Low-speed orthogonal plate machining uses a flat plate setup in a milling machine. The workpiece moves past the tool at velocity V. The feed of the work up into the tool is now called t, the uncut chip thickness. The DOC is the width of the plate w. The cutting edge of the tool is perpendicular to the direction of motion V. The angle that the tool makes with respect to a vertical from the workpiece is called the *back rake angle* α. A positive angle is shown in the schematic. The chip is formed by *shearing*. The *onset of shear* occurs at a low boundary deformed by angle ϕ with respect to the horizontal. This model is sufficient to allow us to consider

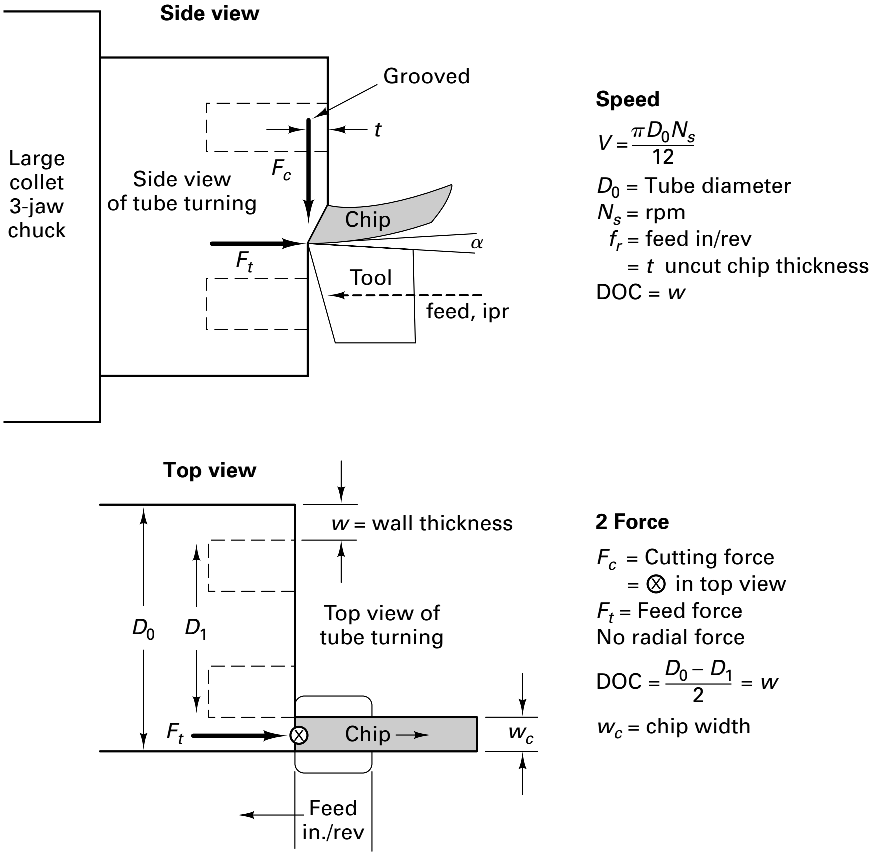

FIGURE 20-15 Orthogonal tube turning (OTT) produces a two-force cutting operation at speeds equivalent to those used in most oblique machining operations. The slight difference in cutting speed between the inside and outside edge of the chip can be neglected.

the behavior of the work material during chip formation, the influence of the most critical elements of the tool geometry (the edge radius of the cutting tool and the back rake angle α), and the interactions that occur between the tool and the freshly generated surfaces of the chip against the rake face and the new surface as rubbed by the flank of the tool.

Basically, the chip is formed by a localized shear process that takes place over a very narrow zone. This large-strain, high-strain-rate, plastic deformation evolves out of a radial compression zone that travels ahead of the tool as it passes over the workpiece. This radial compression zone has, like all plastic deformations, an elastic compression region that changes into a plastic compression region when the yield strength of the material is exceeded. The plastic compression generates dislocation tangles and networks in annealed metals. The applied stress level increases as the material approaches the tool, where the material has no recourse but to shear. The onset of the shear process takes place along the lower boundary of the shear zone defined by the shear angle ϕ. The shear lamella (microscopic shear planes) lie at the angle ψ to the shear plane.

This can be seen in the videograph in Figure 20-16 and the schematic made from the videograph (see Figure 20-17). The videograph was made by videotaping the orthogonal machining of an aluminum plate at over 100 × with a high-speed videotaping machine capable of 1000 frames per second. By machining at low speeds ($V = 8.125$ ipm), the behavior of the process was captured at high frame rates and then observed at playback at very slow frame rates. The uncut chip thickness was $t = 0.020$. The termination of the shear process as defined by the upper boundary cannot be observed in the still videograph but can easily be seen in the videos. Further videographic experiments revealed the increase in the shear angle with workpiece hardness. This directly agrees with the material behavior observed in tensile/compression testing—that yield (and ultimate) strength increases with hardness. In steels the correlation is so good, hardness tests are used to estimate ultimate tensile strength. So in tensile testing, we observe that the onset of plastic deformation (yielding) is delayed by increased hardness

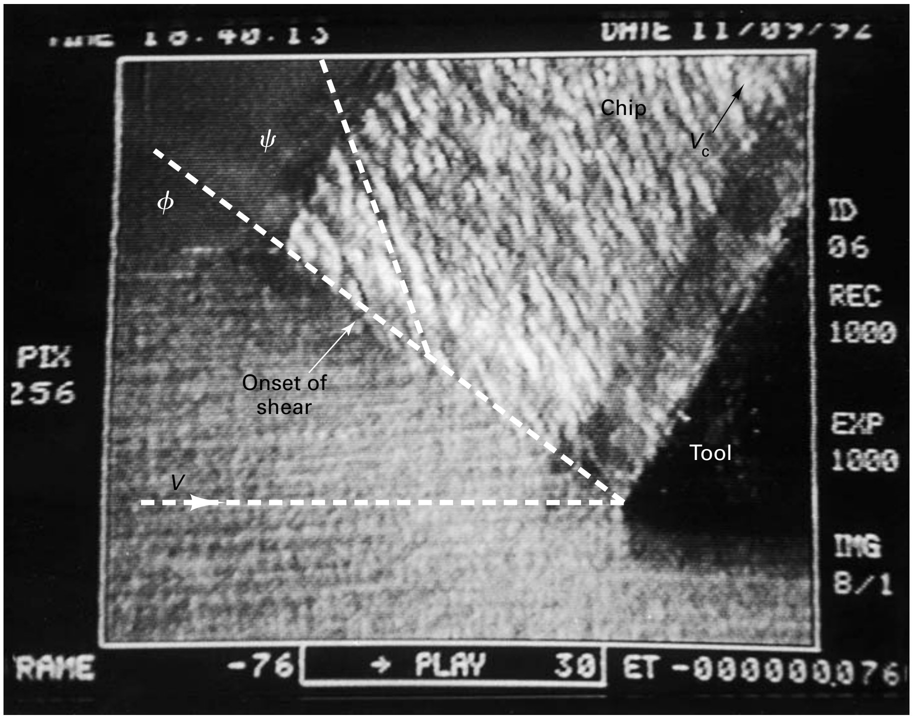

FIGURE 20-16 Videograph made from the orthogonal plate machining process.

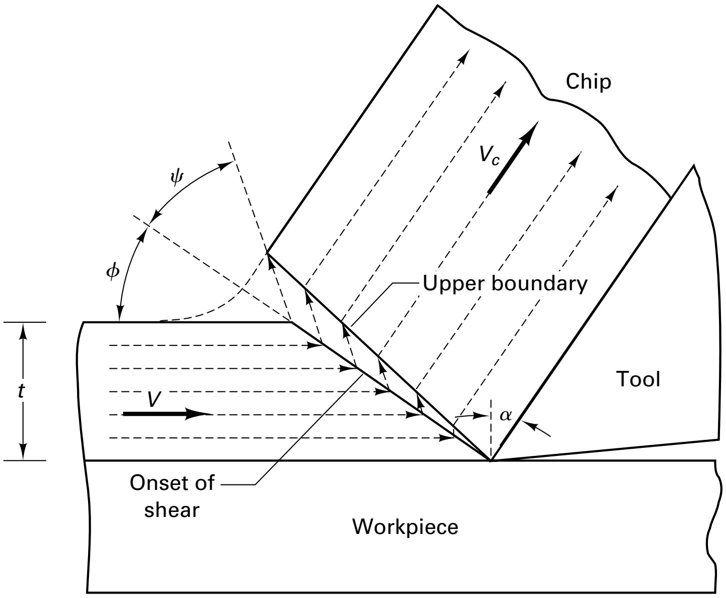

FIGURE 20-17 Schematic representation of the material flow, that is, the chip-forming shear process. ϕ defines the onset of shear or lower boundary. ψ defines the direction of slip due to dislocation movement.

(increased dislocation density). In metalcutting, we observe that the onset of shear (to form the chip) is delayed by increased hardness (so ϕ increases directly with hardness). As the material being machined gets harder, dislocation motion becomes more difficult and plastic deformation (with continuous chips) gives way to fracture (discontinuous chips) just as it does in tensile testing. See Figure 20-18 for examples of chips. If the work material has hard second-phase particles dispersed in it, they can act as barriers to the shear front dislocations, which cannot penetrate the particle. The dislocations create voids around the particles. If there are enough particles of the right size and shape, the chip will fracture through the shear zone, forming segmented chips. *Free-machining steels*, which have small percentages of hard second-phase particles added to them, use this metallurgical phenomenon to break up the chips for easier chip handling.

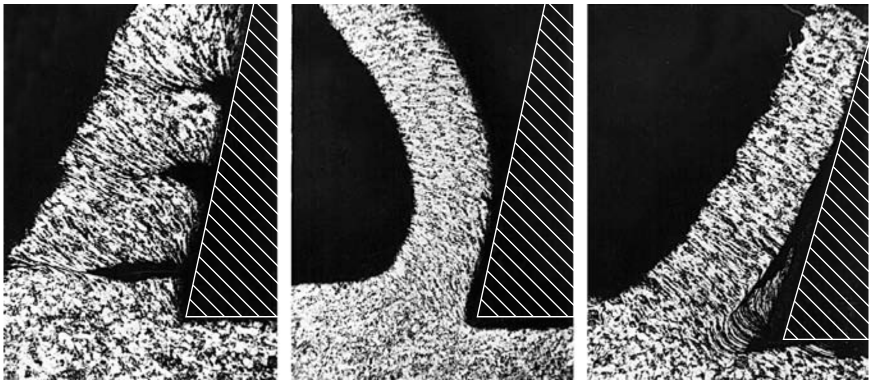

FIGURE 20-18 Three characteristic types of chips. (Left to right) Discontinuous, continuous, and continuous with built-up edge. Chip samples produced by quick-stop technique. *(Courtesy of Eugene Merchant (deceased) at Cincinnati Milacron, Inc., Ohio.)*

■ 20.5 MERCHANT'S MODEL

For the purpose of modeling chip formation, assume that the shear process takes place on a single narrow plane, shown in Figure 20-19 as A–B rather than on the set of shear fronts that actually comprise a narrow shear zone. Further, assume that the tool's cutting edge is perfectly sharp and no contact is being made between the flank of the tool and the new surface. The workpiece passes the tool with velocity V, the cutting speed. The uncut chip thickness is t. Ignoring the compression deformation, chips having thickness t_c are formed by the shear process. The chip has velocity V_c. The shear process then has velocity V_s and occurs at the onset of shear angle ϕ. The tool geometry is given by the back rake angle α and the clearance angle γ. The velocity triangle for V, V_c, and V_s is also shown (see Figure 20-19). The chip makes contact with the rake face of the tool over length l_c. The plate thickness is w.

From orthogonal machining experiments, the chip thickness is measured and used to compute the shear angle from the *chip thickness ratio*, r_c, defined as t/t_c;

$$r_c = \frac{t}{t_c} = \frac{AB \sin \phi}{AB \cos(\phi - \alpha)} \tag{20-18}$$

where AB is the length of the shear plane from the tool tip to the free surface.

Equation 20-18 may be solved for the *shear angle* ϕ as a function of the measurable chip thickness ratio by expanding the cosine term and simplifying:

$$\tan \phi = \frac{r_c \cos \alpha}{1 - r_c \sin \alpha} \tag{20-19}$$

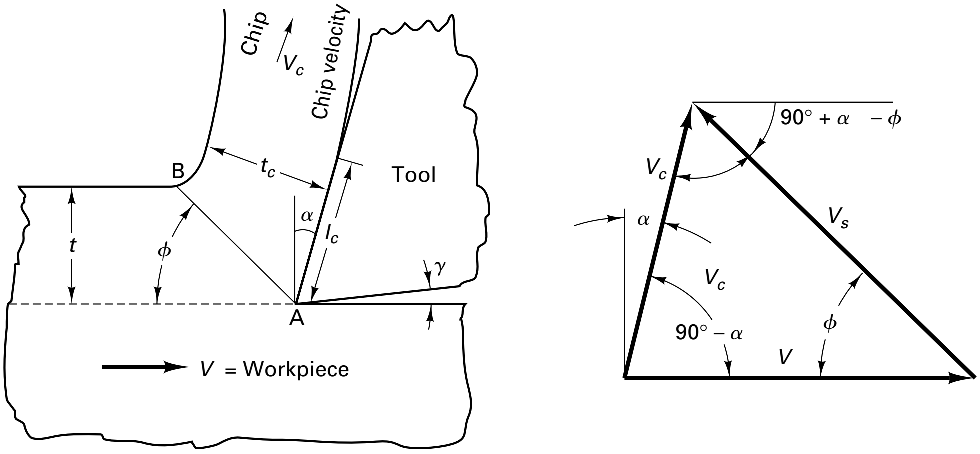

FIGURE 20-19 Velocity diagram associated with Merchant's orthogonal machining model.

There are numerous other ways to measure chip ratios and obtain shear angles both during (dynamically) and after (statically) the cutting process. For example, the ratio of the length of the chip L_c to the length of the cut L can be used to determine r_c. Many researchers use the chip compression ratio, which is the reciprocal of r_c, as a parameter. See Problem 2 at the end of the chapter for another method. The shear angle can be measured statically by instantaneously interrupting the cut through the use of *quick-stop devices*. These devices disengage the cutting tool from the workpiece while cutting is in progress, leaving the chip attached to the workpiece. Optical and scanning electron microscopy is then used to observe the direction of shear. Figure 20-14 shows a QSD on an OPM setup, and Figure 20-18 was made using a quick-stop device. High-speed motion pictures and high-speed videographic systems have also been used to observe the process at frame rates as high as 30,000 frames per second. Figure 20-16 is a high-speed videograph. Machining stages have been built that allow the process to be performed inside a scanning electron microscope and recorded on videotapes for high-resolution, high-magnification examination of the deformation process. Using sophisticated electronics and slow-motion playback, this technique can be used to measure the shear velocity. The vector sum of V_s and V_c equals V.

For consistency of volume, we observe that

$$r_c = \frac{t}{t_c} = \frac{\sin\phi}{\cos(\phi - \alpha)} = \frac{V_c}{V} \tag{20-20}$$

indicating that the chip ratio (and therefore the onset of shear angle) can be determined dynamically if a reliable means to measure V_c can be found.

The ratio of V_s to V is

$$\frac{V_s}{V} = \frac{\cos\alpha}{\cos(\phi - \alpha)} \tag{20-21}$$

These velocities are important in power calculations, heat and temperature calculations, and vibration analysis associated with chatter in chip formation.

20.6 MECHANICS OF MACHINING (STATICS)

Orthogonal machining has been defined as a two-force system. Consider Figure 20-20, which shows a free-body diagram of a chip that has been separated at a shear plane. It is assumed that the resultant force R acting on the back of the chip is equal and opposite to the resultant force R' acting on the shear plane. The resultant R is composed of the *friction force* F and the normal force N acting on the tool–chip interface contact area. The resultant force R' is composed of a *shear force* F_s and normal force F_n acting on the shear plane area A_s. Since neither of these two sets of forces can usually be measured, a third set is needed, which can be measured using a dynamometer (force transducer) mounted either in the workholder or the tool holder. Note that this set has resultant R, which is equal in magnitude to all the other resultant forces in the diagram. The resultant force R is composed of a *cutting force* F_c and a tangential (normal) force F_t. Now it is necessary to express the desired forces (F_s, F_n, F, N) in terms of the measured dynamometer components, F_c and F_t, and appropriate angles. To do this, a circular force diagram is developed in which all six forces are collected in the same force circle (Figure 20-21). The only symbol in this figure as yet undefined is β, which is the angle between the normal force N and the resultant R. It is called friction angle β and is used to describe the friction coefficient μ on the tool–chip interface area, which is defined as F/N so that

$$\beta = \tan^{-1}\mu = \tan^{-1}\frac{F}{N} \tag{20-22}$$

The friction force F and its normal N can be shown to be

$$F = F_c \sin\alpha + F_t \cos\alpha \tag{20-23}$$

$$F = F_c \cos\alpha - F_t \sin\alpha \tag{20-24}$$

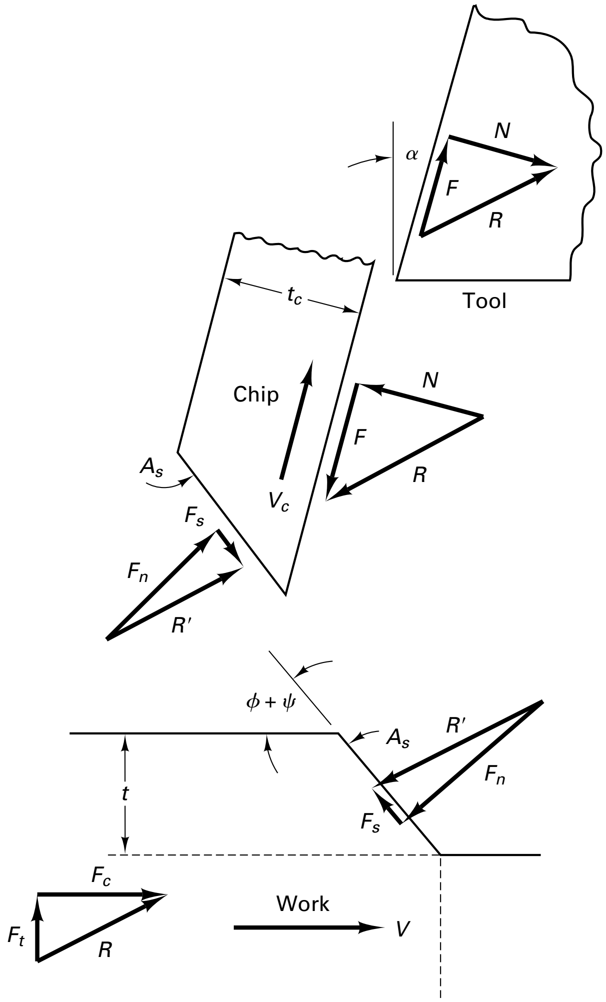

FIGURE 20-20 Free-body diagram of orthogonal chip formation process, showing equilibrium condition between resultant forces R and R'.

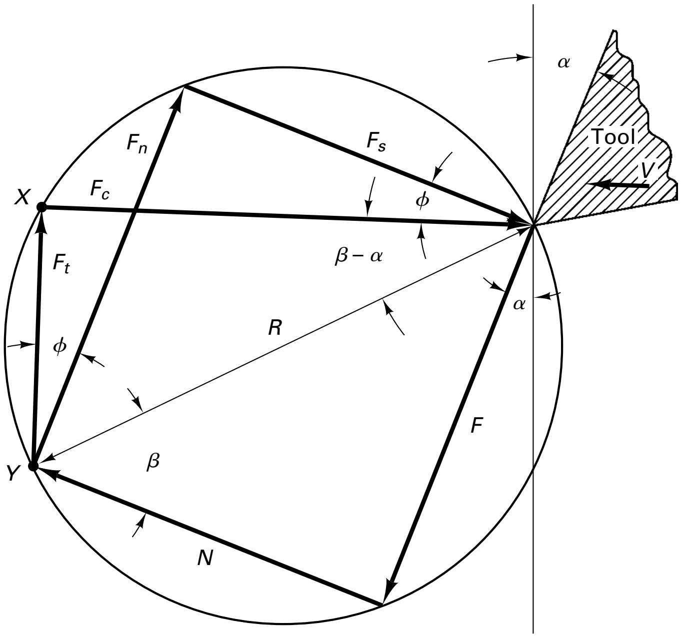

FIGURE 20-21 Merchant's circular force diagram used to derive equations for F_s, F_r, F_t, and N as functions of F_c, F_r, ϕ, α, and β.

and the resultant R is

$$R = \sqrt{F_c^2 + F_t^2} \tag{20-25}$$

Notice that in the special situation where the back rake angle is zero, $F = F_t$ and $N = F_c$, so that in this orientation, the friction force and its normal can be directly measured by the dynamometer.

The forces parallel and perpendicular to the shear plane can be shown from the circular force diagram (Figure 20-21) to be

$$F_s = F_c \cos\phi - F_t \sin\phi \tag{20-26}$$

$$F_n = F_c \sin\phi + F_t \cos\phi \tag{20-27}$$

F_s is of particular interest, because it is used to compute the shear stress on the shear plane. This shear stress is defined as

$$\tau_s = \frac{F_s}{A_s} \tag{20-28}$$

where A_s is the area of the shear plane, as

$$A_s = \frac{tw}{\sin\phi} \tag{20-29}$$

recalling that t was the uncut chip thickness and w was the width of the workpiece. The *shear stress (flow stress)* is, therefore,

$$\tau_s = \frac{F_c \sin\phi \cos\phi - F_t \sin^2\phi}{tw} \text{ psi} \tag{20-30}$$

For a given polycrystalline metal, this shear stress has been shown to be not sensitive to variations in cutting parameters, tool material, or the cutting environment. Figure 20-22 gives some typical values for the flow stress for a variety of metals, plotted against hardness.

Specific horsepower is related to and correlates well with shear stress for a given metal, which will be derived later. Unit power is sensitive to material properties (e.g., hardness), rake angle, depth of cut, and feed, whereas τ_s is sensitive to material properties only.

20.7 SHEAR STRAIN γ AND SHEAR FRONT ANGLE φ

Using Merchant's chip formation bubble model, which emulates the videographic images, a new "stack-of-cards" model, as shown in Figure 20-23, can be developed. From this model, strain is expressed as

$$\gamma = \cos\alpha/[\sin(\phi + \varphi)\cos(\phi + \varphi - \alpha)] \tag{20-31}$$

where

φ = the angle of the onset of the shear plane

ψ = the shear front angle

Using the available machining data, ψ is observed to decrease, reach a minimum, and rise again for all rake angles for a given metal of some hardness.

The minimum energy principle has been reported to have use in various fields such as physics, metalforming processes, and machining processes. Applied to metal cutting, the specific shear energy (shear energy/volume) equals shear stress × shear strain

$$U_s = \tau \times \gamma \tag{20-32}$$

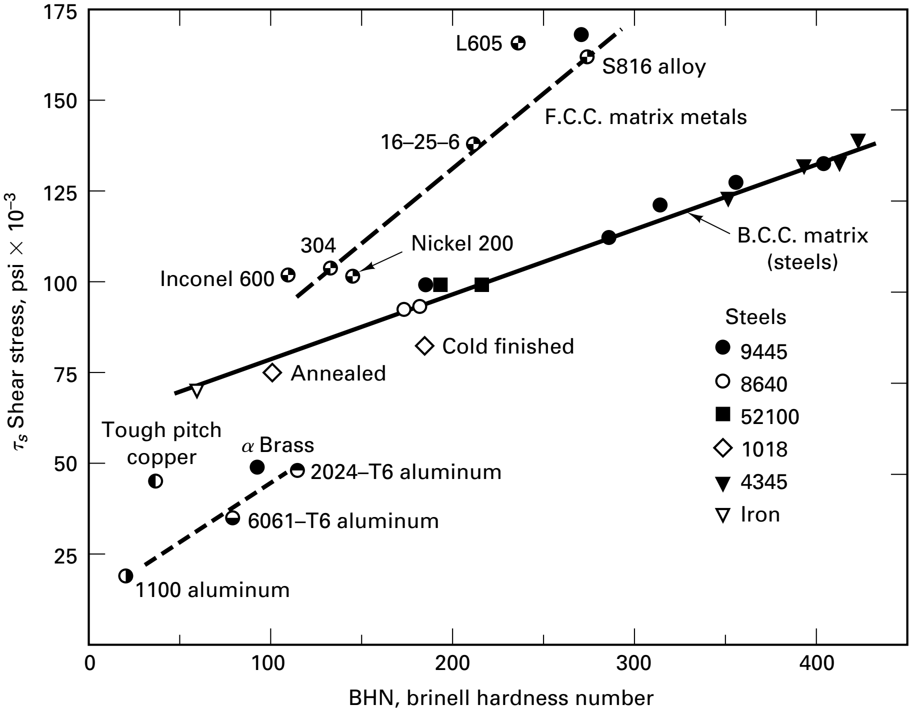

FIGURE 20-22 Shear stress τ_s variation with the Brinell hardness number for a group of steels and aerospace alloys. Data of some selected fcc metals are also included. *(Adapted with permission from S. Ramalingham and K. J. Trigger,* Advances in Machine Tool Design and Research, *1971, Pergamon Press.)*

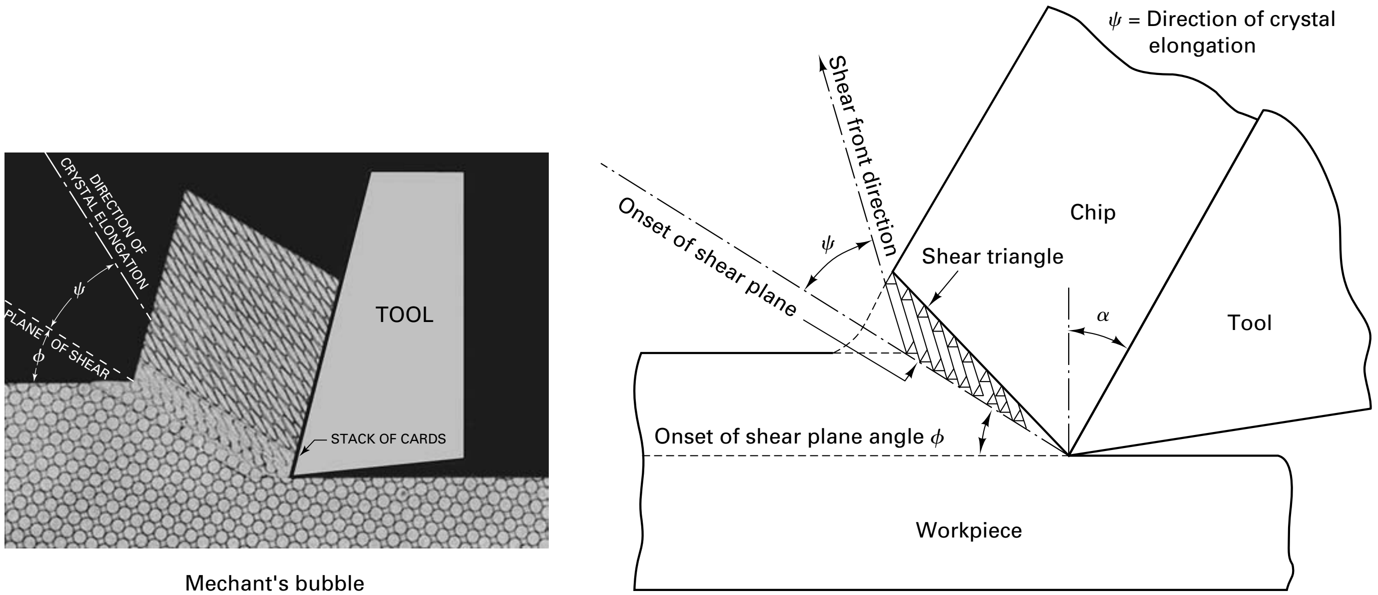

Mechant's bubble model of chip formation

Black-Huang stack-of-cards model

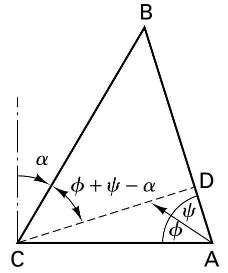

The shaded shear triangle on the right is used to develop the basic equation for shear strain, γ.

FIGURE 20-23 The Black–Huang "stack-of-cards" model for calculating shear strain in metal cutting is based on Merchant's bubble model for chip formation, shown on the left.

The minimum energy principle is used here, where ψ will take on values (shear directions) to reduce shear energy to a minimum.

That is

$$dU_s/d\psi = 0 \tag{20-33}$$

The shear front angle is obtained by

$$\psi = 45^\circ - \phi + \alpha/2 \tag{20-34}$$

Substituting ψ in equation 20-34 into equation 20-31, the shear strain can be expressed as

$$\gamma = 2\cos\alpha/(1 + \sin\alpha) \tag{20-35}$$

which shows that the *shear* strain is dependent only on the rake angle α. The agreement between the predicted shear strain from this model and measured shear strain obtained from metalcutting experiments is exceptionally good. Generally speaking, metalcutting strains are quite large compared to other plastic deformation processes, on the order of 1 to 2 in./in.

This large strain occurs, however, over very narrow regions, resulting in extremely high shear strain rates, ε, typically in the range of 10^4 to 10^8 in./in. per second. It is this combination of large strains and high strain rates operating within a process constrained only by the rake face of the tool that results in great difficulties in theoretical analysis of this process.

In order to verify equation 20-34, metalcutting experiments in copper with a hardness gradient ranging from dead soft to full hard were performed. The equation was experimentally verified to 99% confidence!

- The material begins to shear at the lower boundary of the shear zone, defined by the angle ϕ. As the hardness of a material increases, ϕ increases while ψ decreases, so $\psi + \phi = 45° + \alpha / 2$ is maintained for all levels of hardness.
- The material in the shear zone shears at an inclination angle ψ to the plane of the onset ϕ of shear plane for aluminum and steel.
- Shear strain and shear front angle can be determined by

$$\gamma = 2 \cos \alpha/(1 + \sin \alpha)$$

$$\psi + \phi = 45° + \alpha/2$$

where ϕ and ψ vary with hardness.

20.8 MECHANICS OF MACHINING (DYNAMICS)

Machining is a dynamic process of large strain and high strain rates. All the process variables are dependent variables. The process is intrinsically a closed-loop interactive process as shown in Figure 20-24.

Starting at the top, inputs to the processes (speed, feed, depth of cut) determine the chip load on the tool. The chip load determines the cutting forces (magnitude and direction) (usually elastic), which alters the chip load on the tool. The altered chip load produces new forces. The cycle repeats, producing chatter and vibration.

Remember that plastic deformation is always preceded by elastic deformation. The elastic deflection behaves like a big spring. The mechanism by which a process

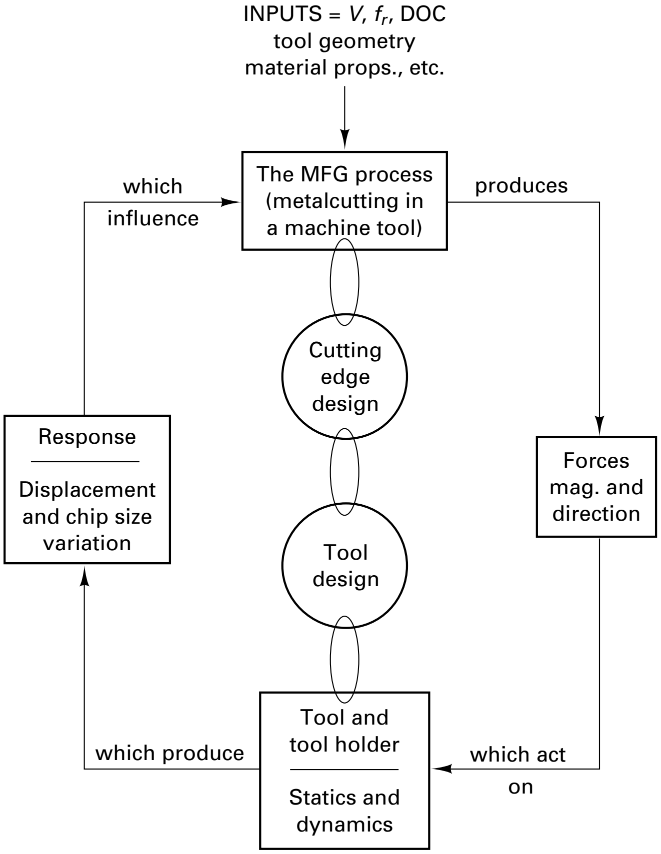

FIGURE 20-24 Machining dynamics is a closed-loop interactive process that creates a force-displacement response.

dissipates energy is called chatter or vibration. In machining, it has long been observed in practice that rotational speed may greatly influence process stability and chatter. Experienced operators commonly listen to machining noise and interactively modify the speed when optimizing a specific application. In addition, experience demonstrates that the performance of a particular tool may vary significantly based on the machine tool employed and other characteristics such as the workpiece, fixture holder, and the like. Today more than ever, the manufacturing industry is more competitive and responsive, characterized by both high-volume and small-batch production, seeking economies of scale. High productivity is achieved by increased machine and tooling capabilities along with the elimination of all non-value-added activities. Few companies can afford lengthy trial-and-error approaches to machining-process optimization or additional processes to treat the effect of chatter.

In metalcutting, chatter is a self-excited vibration that is caused by the closed-loop force-displacement response of the machining process. The process-induced variations in the cutting force may be caused by changes in the cutting velocity, chip cross section (area), tool–chip interface friction, built-up edge, workpiece variation, or, most commonly, process modulation resulting in regeneration of vibration. When more energy is input into the dynamic machining system than can be dissipated by mechanical work, damping, and friction, equilibrium (the state of minimum potential energy) is sought by the machining system through the generation of chatter vibration.

The proper classification of the type of vibration is the first step in identifying and solving the cause of unwanted vibration (see Figure 20-25).

- *Free vibration* is the response to any initial condition or sudden change. The amplitude of the vibration decreases with time and occurs at the natural frequency of the system. Interrupted machining is an example that often appears as lines or shadows following a surface discontinuity.
- *Forced vibration* is the response to a periodic (repeating with time) input. The response and input occur at the same frequency. The amplitude of the vibration remains constant for set input conditions and is linearly related to speed. Unbalance, misalignment, tooth impacts, and resonance of rotation systems are the most common examples.

- **Free Vibration** The response to an initial condition or sudden change. The amplitude of the vibration decreases with time and occurs at the natural frequency of the system often produced by interrupted machining. Often appears as lines or shadows following a surface discontinuity.

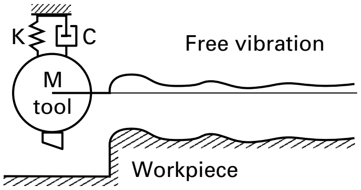

- **Forced Vibration** The response to a periodic (repeating with time) input. The response and input occur at the same frequency. The amplitude of the vibration remains constant for a set input condition and is nonlinearly related to speed. Unbalance, misalignment, tooth impacts, and resonance of rotating systems are the most common examples.

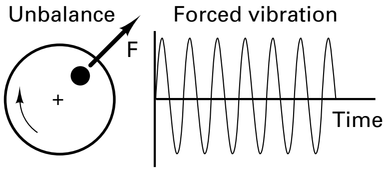

- **Self-Excited Vibration** The periodic response of the system to a constant input. The vibration may grow in amplitude (unstable) and occurs near the natural frequency of the system regardless of the input. Chatter due to the regeneration of surface waviness is the most common metal cutting example.

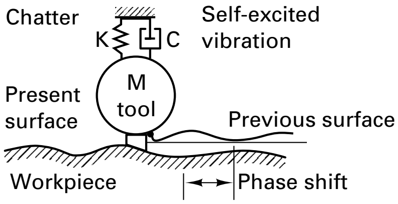

FIGURE 20-25 There are three types of vibration in machining.

- *Self-excited vibration* is the periodic response of the system to a constant input. The vibration may grow in amplitude (become unstable) and occurs near the natural frequency of the system regardless of the input. Chatter due to the regeneration of waviness in the machined surface is the most common metal cutting example.

How do we know chatter exists? Listen and look! Chatter is characterized by the following:

1. There is a sudden onset of vibration (a screech or buzz or whine) that rapidly increases in amplitude until a maximum threshold (saturation) is reached.
2. The frequency of chatter remains very close to a natural frequency (critical frequency) of the machining system and changes little with variation of process parameters. The largest force-displacement response occurs at resonance and therefore the greatest energy dissipation.
3. Chatter often results in unacceptable surface finish, exhibited by a helical or angular pattern (pearled or fish scaled) superimposed over normal feed marks.
4. Visible surface undulations are found in the feed direction and corresponding wavy or serrated chips with variable thickness.

Figure 20-26 shows some typical examples of chatter visible in the surface finish marks.

There are several important factors that influence the stability of a machining process:

- Cutting stiffness of the workpiece material (related to the machinability), K_s
- Cutting-process parameters (speed, feed, DOC, total width of chip)
- Cutter geometry (rake and clearance angles, edge prep, insert size and shape)
- Dynamic characteristics of the machining process (tooling, machine tool, fixture, and workpiece)

K_s, cutting stiffness, is closely aligned with flow stress but simpler to calculate in that ϕ is not used. Like flow stress, cutting stiffness can be viewed as a material property of the workpiece, dependent on hardness.

CHIP FORMATION AND REGENERATIVE CHATTER

In machining, the chip is formed due to the shearing of the workpiece material over the chip area (A = thickness × width = $t \times w$), which results in a cutting force F_c. The magnitude of the resulting cutting force is predominantly determined by the material cutting stiffness K_s and the chip area such that $F_c = K_s \times t \times w$. The direction of the cutting force F_c is influenced mainly by the geometries of the rake and clearance angles as well as the edge prep.

Machining operations require an overlap of cutting paths that generate the machined surface (see Figure 20-27). In single-point operations, the overlap of cutting paths does not occur until one complete revolution. In milling or drilling, overlap occurs in a fraction of a revolution, depending on the number of cutting edges on the tool.

The cutting force causes a relative displacement X between the tool and workpiece, which affects the uncut chip thickness t and, in turn, the cutting force. This coupled relationship between displacement in the Y-direction (modulation direction) and the resulting cutting force forms a closed-loop response system. The modulation direction is normal to the surface defining the chip thickness.

A phase shift ε between subsequent overlapping surfaces results in a variable chip thickness and modulation of the displacement, causing chatter vibration. The phase shift between overlapping cutting paths is responsible for producing chatter. However, there is a preferred speed that corresponds to a phase-locked condition ($\varepsilon = 0$) that results in a constant chip thickness t. A constant chip thickness results in a steady cutting force and the elimination of the feedback mechanism responsible for regenerative chatter. This what the operators are trying to achieve when they vary cutting speeds (see Figure 20-28).

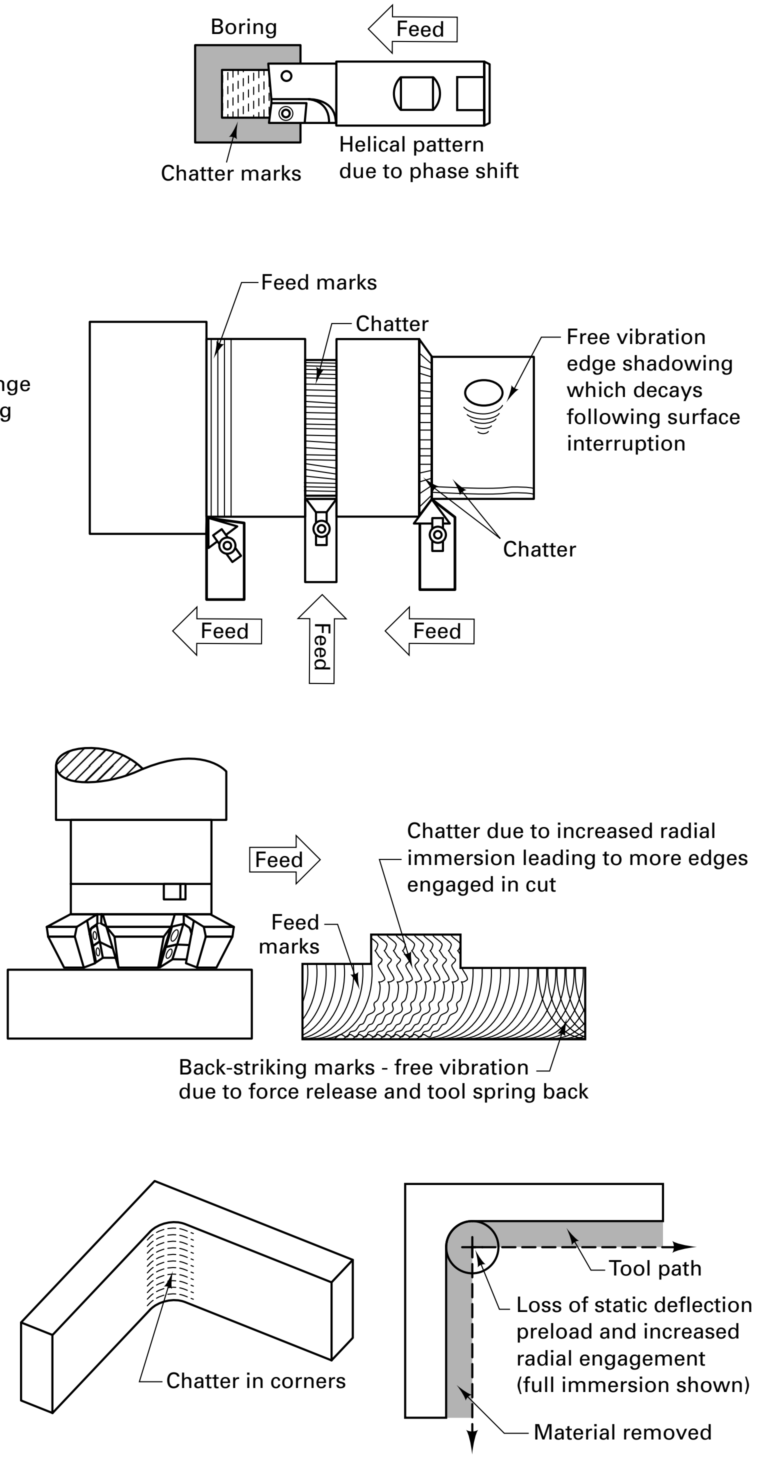

Chatter in boring

Chatter in turning, plunge cutting, and chamfering during single point operations

Chatter in face milling visible in the surface finish

Chatter in end milling

FIGURE 20-26 Some examples of chatter that are visible on the surfaces of the workpiece.

HOW DO THE IMPORTANT FACTORS INFLUENCE CHATTER?

- *Cutting stiffness K_s*. This is a material property related to shear flow stress, hardness, and work hardening and is often described in a relative sense of the machinability of materials. Materials such as steel and titanium require much greater shear forces than aluminum or cast iron; therefore, the corresponding larger cutting forces lead to greater displacement in the Y-direction and less machining stability.
- *Speed*. The process parameters are the easiest factors to change chatter and its amplitude. The rotational *speed* of the tool affects the phase shift between overlapping sur-

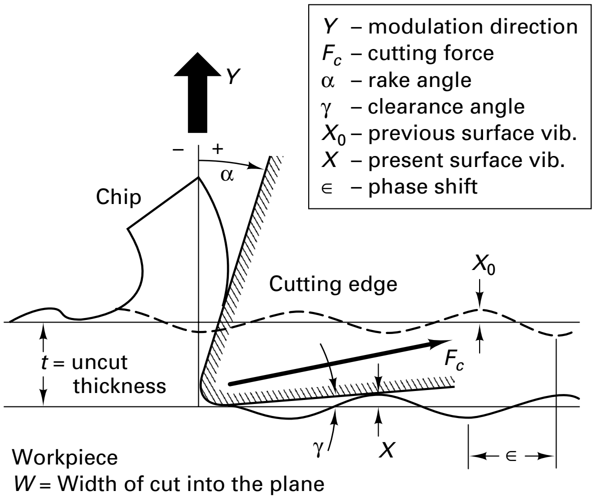

FIGURE 20-27 When the overlapping cuts get out of phase with each other, a variable chip thickness is produced, resulting in a change in F_c on the tool or workpiece.

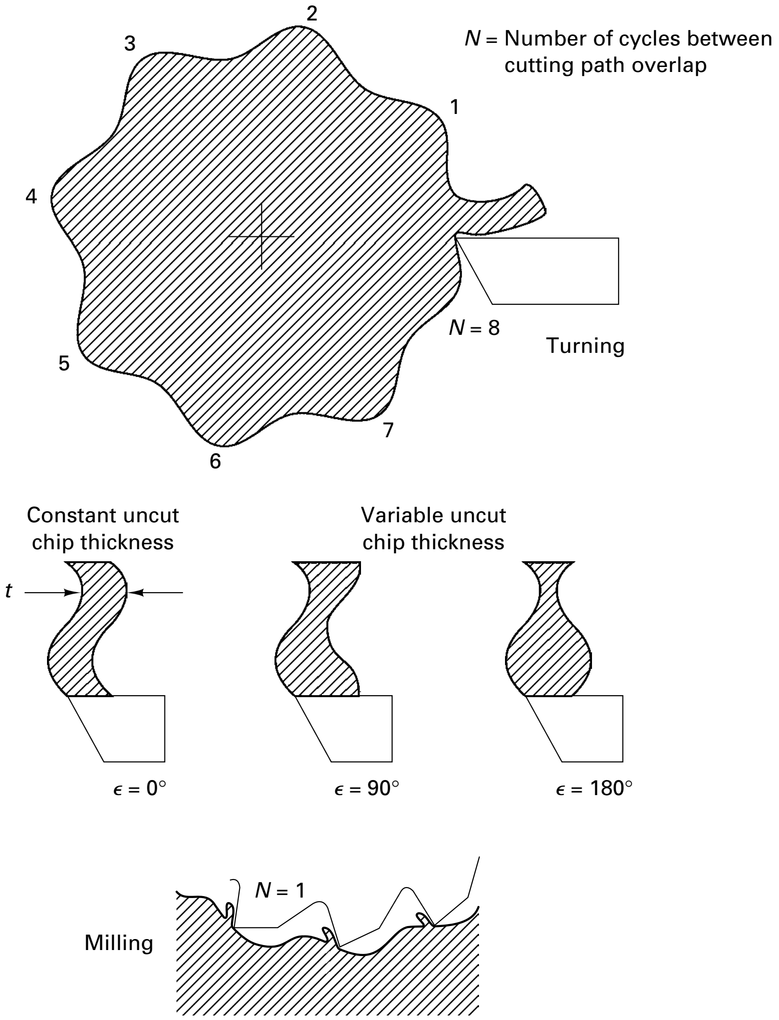

FIGURE 20-28 Regenerative chatter in turning and milling produced by variable uncut chip thickness.

faces and the regeneration of vibration. A handheld speed analyzer[2] that produces dynamically preferred speed recommendations is commercially available. When applied to processes exhibiting a relative rotational motion between the cutting tool and workpiece, it recommends a speed to eliminate chatter.

---

[2] Best speed by Design Manufacturing Inc., Tampa, Florida.

The most successful applications are in

- Milling, boring, and turning
- Multipoint tools
- Machining aluminum and cast iron
- High-speed machining
- Thin-chip, high-speed die machining

At slow speeds (relative to the vibration frequency) process stability is mainly due to increased frictional losses occurring between the tool clearance angle (defined by γ) and the present surface vibration X. This interference and friction dissipates energy in the form of heat and is called *process damping*. As machining speeds are increased, the wavelength of the surface vibration also increases, which reduces the slope of the surface and eliminates process-induced damping. Additionally, chatter becomes more significant as speeds increase, because existing forces approach the natural frequencies of the machining system. The analyzer measures and identifies the vibrational frequencies of the chatter noise and determines which speeds will most closely result in $\varepsilon = 0$. A zero phase shift between overlapping surfaces eliminates the variation of the chip thickness and eliminates the modulation, resulting in chatter.

- *Feed*. The *feed* per tooth defines the average uncut chip thickness t and influences the magnitude of the cutting force. The feed does not greatly influence the stability of the machining process (i.e., whether chatter occurs) but does control the severity of the vibration. Because no cutting force exists if the vibration in the Y-direction results in the loss of contact between the tool and workpiece, the maximum amplitude of chatter vibration is limited by the feed.
- *DOC*. The *depth of cut* is the primary cause and control of chatter. The DOC defines the chip width and acts as the feedback gain in the closed-loop machining process. The stability limit (or borderline between stable machining and chatter) may be experimentally determined by incrementally increasing the DOC until the onset of chatter. It can also be analytically predicted based on a thorough understanding of the machining system dynamics and material cutting stiffness.
- *Total width of chip.* The *total width of chip* is equal to the DOC times the number of cutting edges engaged in the cut. The total width of cut directly influences the stability of the process. At a fixed DOC that corresponds to the stability limit, increasing the number of engaged cutting edges will result in chatter. The number of engaged teeth in the cut may be increased by adding inserts (using a fine-pitch cutter) or increasing the radial immersion of a milling cutter. Conversely, reducing the number of edges in the cut will have a stabilizing effect on the process.

The *cutting tool geometry* influences the magnitude and direction of the cutting force, especially the amount of the force component in the modulation direction Y. A greater projection of force in the Y-direction results in increased displacement and vibration normal to the surface, leading to potential chatter.

- As the *back rake angle* α increases (becomes more positive), the length of the onset of shear plane decreases, which reduces the magnitude of the cutting force, F_c. A more positive rake also directs the cutting force to be more tangential and reduces the force component in the Y-direction. In general, a more positive cutting geometry increases process stability, especially at higher speeds. An insufficient feed compared to the edge radius results in less efficient machining, greater tool deflection, and poorer machining stability.
- A *reduced clearance angle* γ, which increases the frictional contact between the tool and workpiece, may produce process damping. The stabilizing effect is due to energy dissipation in the form of heat, which potentially decreases tool life and may thermally distort the workpiece or increase the heat-affected zone in the workpiece. The initial wear of a new cutting edge may have a stabilizing effect on chatter.

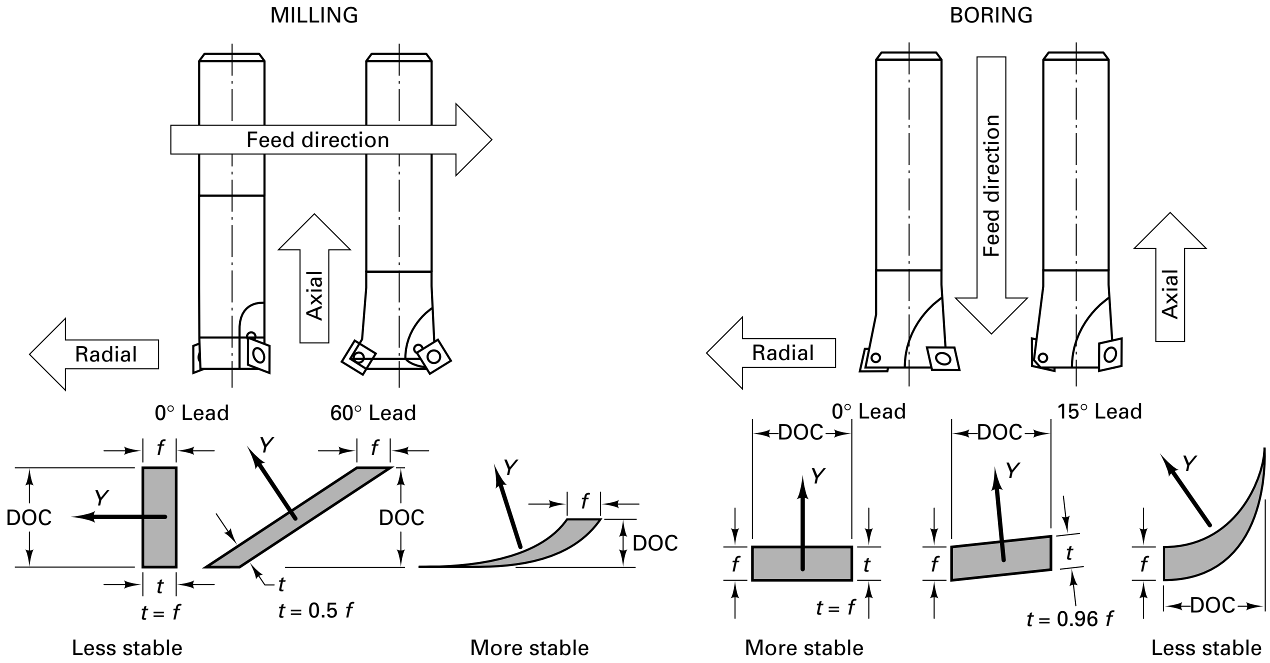

FIGURE 20-29 Milling and boring operations can be made more stable by correct selection of insert geometry.

- The *size* (nose radius), *shape* (diamond, triangular, square, round), and *lead angle* of the insert all influence the chip area shape and the corresponding Y-direction (Figure 20-29). In milling, the feed direction is transverse to the tool axis (i.e., radial), and the DOC is defined by the axial immersion of the tool. In milling, as the lead angle of the cut increases or the shape of the insert becomes rounded (same effect as a large nose radius compared to a small DOC), the Y-orientation is directed away from the more flexible radial tool direction and toward the stiffer axial direction. The orientation of the modulation direction Y toward a dynamically more rigid direction results in decreased vibrational response and therefore greater process stability (less tendency for chatter). In boring, the feed direction is axial, and the DOC is determined by the radial direction. Therefore, in boring, a reduced lead angle or a less round (and smaller nose radius compared to the DOC) insert maintains a more axial (stiffer tool direction) orientation of Y, leading to greater stability.

Because the stability of the machining process is a direct result of the dynamic *force-displacement characteristics* between the tool and workpiece, all components of the machining system (tool, spindle, workpiece, fixture, machine tool) may, to varying degrees, influence chatter. Maximizing the dynamics (the product of the static stiffness and damping) of the machining system leads to increased process stability. For example, the static stiffness of an overhung (cantilever) tool with circular cross section varies nonlinearly with the diameter D and the unsupported length L. Machining stability is increased by having the tool with the largest possible diameter with the minimum overhand. The frequency of chatter occurs near the most flexible vibrational mode of the machining system.

STABILITY LOBE DIAGRAM

A stability lobe diagram (Figure 20-30) relates the total width of cut that can be machined to the rotational speed of the tool with a specified number of cutting edges. If the total width of cut is maintained below a minimum level (although this may be of limited practical value for some machining systems), then the process stability exhibits speed independence

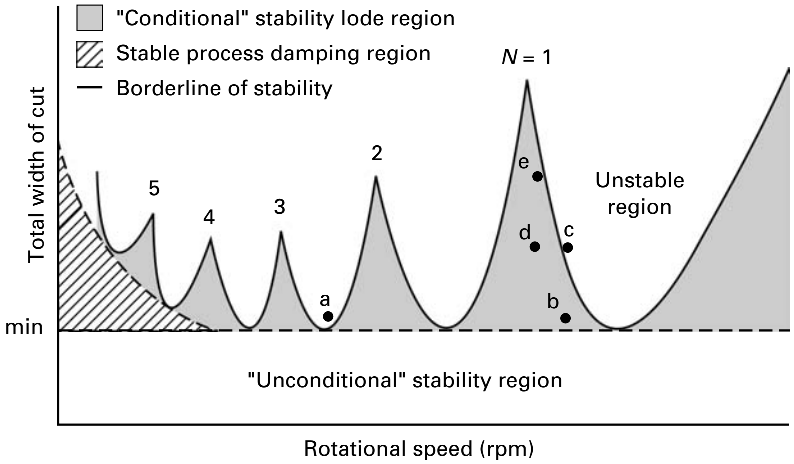

FIGURE 20-30 Dynamic analysis of the cutting process produces a stability lobe diagram, which defines speeds that produce stable and unstable cutting conditions.

or "unconditional" stability. At slow speeds, increased stability may be achieved within the process damping region. The "conditional" stability lobe regions allow increased total width of cut (DOC × number of edges engaged in the cut) at dynamically preferred speeds at which the phase shift ε between overlapping or consecutive cutting paths approaches zero. The stability lobe number N indicates complete cycles of vibration that exist between overlapping surfaces. As can be seen by the diagram, the higher speeds correspond to lower lobe numbers and provide the greatest potential increase in the total width of cut and material removal rate (due to greater lobe height and width). If the total width of cut exceeds the borderline of stability, even if the process is operating at a preferred speed, chatter occurs. The greater the total width of cut above the stability limit, the more unstable and violent will be the chatter vibration.

When a chatter condition occurs, such as at point a on the stability lobe diagram, the rotational speed is adjusted to the first recommended speed ($N = 1$), which results in stable machining at point b on the diagram. The DOC may be incrementally increased until chatter again occurs as the stability border is crossed at point c. Using the analyzer again, chattering under the new operating conditions will result in a modified speed recommendation corresponding to point d. If desired, the DOC may again be incrementally increased (conservative steps promote safety) to point e. In general, do not attempt to maintain the DOC (and total width of cut) right up to the borderline of stability because workpiece variation affecting K_s, speed errors, or small changes in the dynamic characteristics of the machining system may result in crossing the stability limit into severe chatter. The amplitude of chatter vibration may be more safely limited by temporary reduction of the feed per tooth until a preferred speed and stable depth of cut have been established.

HEAT AND TEMPERATURE IN METALCUTTING

In metalcutting, the power put into the process (F_cV) is largely converted to heat, elevating the temperatures of the chip, the workpiece, and the tool. These three elements of the process, along with the environment (which includes the cutting fluid), act as the heat sinks. Figure 20-31 shows the distribution of the heat to these three sinks as a function of cutting speed. As speed increases, a greater percentage of the heat ends up in the chip to the point where the chips can be cherry red or even burn at high cutting speeds.

There are three main *sources* of heat. Listed in order of their heat-generating capacity, they are shown in Figure 20-32.

1. The shear front itself, where plastic deformation results in the major heat source. Most of this heat stays in the chip.
2. The tool–chip interface contact region, where additional plastic deformation takes place in the chip and considerable heat is generated due to sliding friction.
3. The flank of the tool, where the freshly produced workpiece surface rubs the tool.

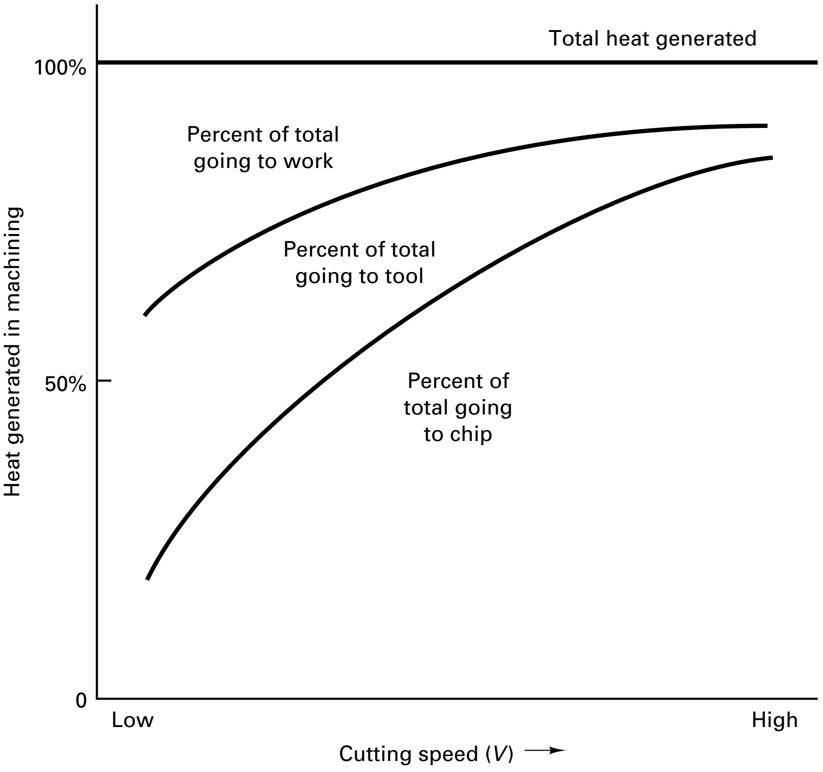

FIGURE 20-31 Distribution of heat generated in machining to the chip, tool, and workpiece. Heat going to the environment is not shown. Figure based on the work of A. O. Schmidt.

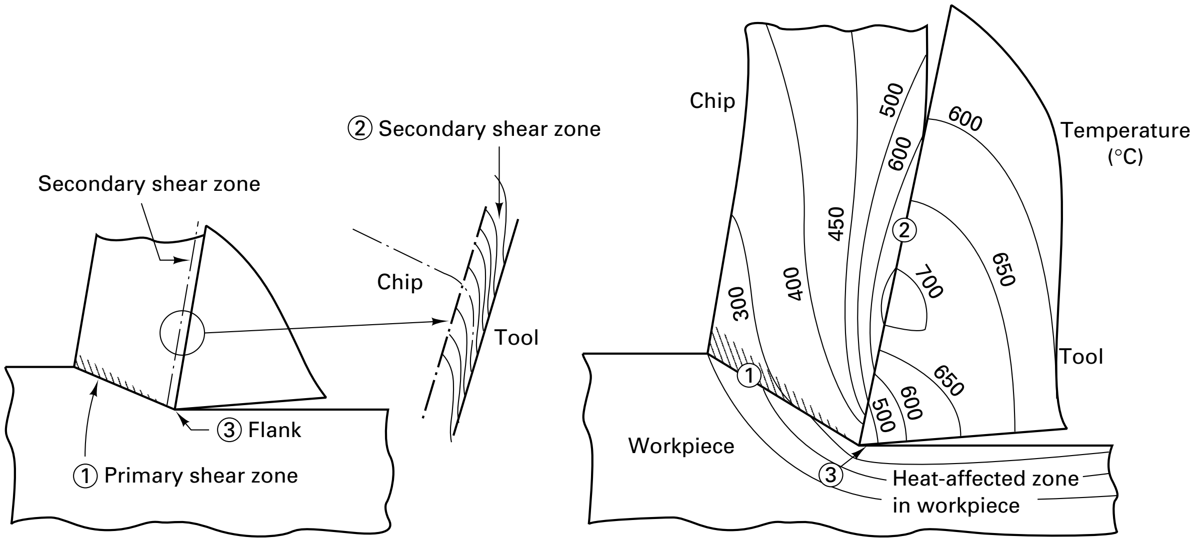

FIGURE 20-32 There are three main sources of heat in metal cutting. (1) Primary shear zone. (2) Secondary shear zone tool–chip (T–C) interface. (3) Tool flank. The peak temperature occurs at the center of the interface, in the shaded region.

There have been numerous experimental techniques developed to measure cutting temperatures and some excellent theoretical analyses of this "moving" multiple-heat-source problem. Space does not permit us to explore this problem in depth. Figure 20-33 shows the effect of cutting speed on the tool–chip interface temperature. The rate of wear of the tool at the interface can be shown to be directly related to temperature (see Figure 20-33b). Because cutting forces are concentrated in small areas near the cutting edge, these forces produce large pressures. The tool material must be hard (to resist wear) and tough (to resist cracking and chipping). Tools used in

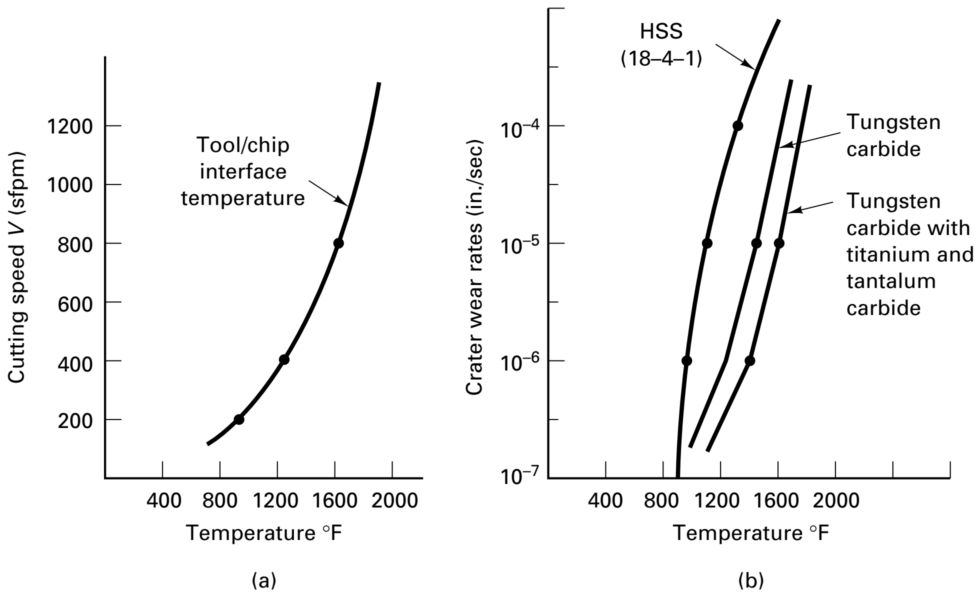

FIGURE 20-33 The typical relationship of temperature at the tool–chip interface to cutting speed shows a rapid increase. Correspondingly, the tool wears at the interface rapidly with increased temperature, often created by increased speed.

interrupted cutting, such as milling, must be able to resist impact loading as well. Tool materials must sustain their hardness at elevated temperatures. The challenge to manufacturers of cutting tools has always been to find materials that satisfy these severe conditions. Cutting tool materials that do not lose hardness at the high temperatures associated with high speeds are said to have "hot hardness." Obtaining this property usually requires a trade-off in toughness, as hardness and toughness are generally opposing properties. In Chapter 21 cutting-tool materials will be addressed in more depth.

20.9 SUMMARY

In this chapter, the basics of the machining processes have been presented. Chapters 22 through 29 provide additional information on the various operations and machine tools. Modern machine tools can often perform several basic operations. As described in Chapter 26, machining centers are now widely used. These chapters on basic processes must be carefully studied. The relationship between the basic processes and the machine tools that can be used to perform these processes has been presented. In Chapter 26, an anatomy for automation will be presented, which will show that most of the machines described in this chapter will be of the A(2) or A(3) level of automation. Machining centers, which are numerical control machines, are A(4).Machining centers have automatic tool-change capability and are usually capable of milling, drilling, boring, reaming, tapping (hole threading), and other minor machining processes. For particular machines, you will need to become familiar with new terminology, but in general all machining processes will need inputs concerning rpm (given that you selected the cutting speed), feeds, and depths of cut. Note also from these tables that the same process can be performed on two or more different machine tools. There are many ways to produce flat surfaces, internal and external cylindrical surfaces, and special geometries in parts. Generally, the quantity to be made is the driving factor in the selection of processes, as will be explained later.

This chapter also introduced orthogonal machining, a laboratory machining process used to experimentally determine values for specific horsepower, cutting stiffness, and flow stress for machining.

As noted previously, the properties of the work material are important in chip formation. High-strength materials produce larger cutting forces than materials of lower strength, causing greater tool and work deflection; increased friction, heat generation, and operating temperatures; the structure and composition also influence metal cutting. Hard or abrasive constituents, such as carbides in steel, accelerate tool wear.

Work hardness prior to machining is an important factor because it controls the onset of shear. Onset is delayed by increased hardness, so ϕ increases, as does τ_s. Highly ductile materials not only permit extensive plastic deformation of the chip during cutting, which increases heat generation and temperature, but also result in longer, "continuous" chips that remain in contact longer with the tool face, thus causing more frictional heat. Chips of this type are severely deformed and have a characteristic curl. On the other hand, materials that are already heavily work hardened or brittle, such as gray cast iron, lack the ductility necessary for appreciable plastic deformation. Consequently, the compressed material ahead of the tool fails in brittle fracture, sometimes along the shear front, producing small fragments. Such chips are termed *discontinuous* or *segmented*.

A variation of the continuous chip, often encountered in machining ductile materials, is associated with a *built-up edge* (BUE) formation on the cutting tool. The local high temperature and extreme pressure in the cutting zone cause the work material to adhere or pressure weld to the cutting edge of the tool forming the built-up edge, rather like a dead metal zone in the extrusion process. Although this material protects the cutting edge from wear, it modifies the geometry of the tool. BUEs are not stable and will break off periodically, adhering to the chip or passing under the tool and remaining on the machined surface. Built-up edge formation can be eliminated or minimized by reducing the depth of cut, altering the cutting speed, using positive rake tools, applying a coolant, or changing cutting-tool materials.

■ Key Words

back rake angle
boring
broaching
built-up edge
chatter
chip ratio
chip velocity
cutting force
cutting stiffness
cutting tool
depth of cut
drilling
dynamics
feed
flow stress
friction force
grinding (abrasive machining)
machine tool
metalcutting
milling
oblique machining
onset of shear
orthogonal machining
regenerative chatter
sawing
self-excited vibration
shaping
shear angles
shear force
shear strain
shear velocity
specific horsepower
speed
stability lobe diagram
turning
vibration
workholding device
workpiece

■ Review Questions

1. Why has the metalcutting process resisted theoretical solution for so many years?
2. What variables must be considered in understanding a machining process?
3. Which of the seven basic chip formation processes are single point, and which are multiple point? See Figure 20-2.
4. How is feed related to speed in the machining operations called turning?
5. Before you select speed and feed for a machining operation, what have you had to decide? (*Hint:* See Figure 20-4.)
6. Milling has two feeds. What are they, and which one is an input parameter to the machine tool?
7. What is the fundamental mechanism of chip formation?
8. What are the implications of Figure 20-17, given that this videograph was made at a very low cutting speed?
9. What is the difference between oblique machining and orthogonal machining?
10. Note that the units for the approximate equation for MRR for turning are not correct. When is the approximate equation not very good (yields a large error in MRR values)?
11. For orthogonal machining, the cutting edge radius is assumed to be small compared to the uncut chip thickness. Why?
12. How do the magnitude of the strain and strain rate values of metal cutting compare to those of tensile testing?
13. Why is titanium such a difficult metal to machine? (Note its high value of HP_s).
14. Explain why you get segmented or discontinuous chips when you machine cast iron.
15. Why is metal cutting shear stress such an important determination?
16. Which of the three cutting forces in oblique cutting consumes most of the power?
17. How is the energy in a machining process typically consumed?
18. Where does the energy consumed in metalcutting ultimately go?
19. State two ways of estimating the primary cutting force F_c.
20. How is cutting speed related to tool wear?
21. What is the relationship between hardness and temperature in metal cutting tool materials?
22. Why does the cutting force F_c increase with increased feed or DOC?

23. Why doesn't the cutting force F_c increase with increased speed V?
24. How do the selection of the machining parameters (speed, feed, DOC) influence chatter?
25. You had a machining operation (boring) running perfectly and you changed work materials. All of a sudden, you are getting lots of chatter. Why?
26. Explain Figure 20-31. Why is the percentage of total heat generated during machining changing as speed increases?

■ Problems

1. For a turning operation, you have selected an HSS tool and turning a hot rolled free machining steel, Bhn = 300. Your depth of cut will be 0.150 in. The diameter of the workpiece is 1.00 inches.
   a. What speed and feed would you select for this job?
   b. Using a speed of 105 sfpm and a feed of 0.015, calculate the spindle rpm for this operation.
   c. Calculate the metal removal rate.
   d. Calculate the cutting time for the operation with a length of cut of 4 in. and 0.10-in. allowance.
2. For a slab milling operation using a 5-in.-diameter, 11-tooth cutter (see Figure 20-6), the feed per tooth is 0.005 in./tooth with a cutting speed of 100 sfpm (HSS steel). Calculate the rpm of the cutter and the feed rate (f_m) of the table, then calculate the metal removal rate, MRR, where the width of the block being machined is 2 in. and the depth of cut is 0.25 in. Calculate the time to machine (T_m) a 6-in.-long block of metal with this setup. Suppose you switched to a coated-carbide tool, so you increase the cutting speed to 400 sfpm. Now recalculate the machining time (T_m) with all the other parameters the same.
3. The power required to machine metal is related to the cutting force (F_c) and the cutting speed. For Problem 1, estimate cutting force F_c for this turning operation. (*Hint:* You have to estimate a value of HPs for this material.)
4. In order to drill a hole in the material described in Problem 1 using an HSS drill, you have to select a cutting speed and a feed rate. Using a speed of 105 sfpm for the HSS drill, calculate the rpm for a $\frac{3}{4}$-in.-diameter drill and the MRR if the feed rate is 0.008 inches per revolution.
5. Explain how the constant 33,000 in equation 20-8 is obtained.
6. Explain how the constant 396,000 in equation 20-10 is obtained.
7. Suppose you have the following data obtained from a metal-cutting experiment (orthogonal machining). Compute the shear angle, the shear stress, the specific energy, the shear strain, and the coefficient of friction at the tool–chip interface. How do your HP_s and τ_s values compare with the values found in Chapter 20?
8. For the data in Problem 7, determine the specific shear energy and the specific friction energy.
9. Derive equations for F and N using the circular force diagram. (*Hint:* Make a copy of the diagram. Extend a line from point X intersecting force F perpendicularly. Extend a line from point Y intersecting the previous line perpendicularly. Find the angle α made by these constructions.)
10. Derive equations for F_s and F_n using the circular force diagram. (*Hint:* Construct a line through X parallel to vector F_n. Extend vector F_s to intersect this line. Construct a line from X perpendicular to F_n. Construct a line through point Y perpendicular to the line through X.)
11. For the data in Problem 7, calculate the shear strain and compare it to $1/r_c$. Comment on the comparison $1/r_c = t_c/t = L/L_c$ assuming that $W = W_c$.
12. A manufacturing engineer needs an estimate of the cutting force F_c to estimate the loss of accuracy of a machining process due to deflection. The material being machined is Inconel 600 with a BHN value of 100. The cutting speed was 250 fpm, the feed was 0.020 in./rev, and the depth of cut was 0.250 in. The chip from the process measured 0.080 in. thick. Estimate the cutting force F_c assuming that $F_t = F_c/2$.
13. Using Figure 20-4 for input data, determine the maximum and minimum MRR values for rough machining (turning) a 1020 carbon steel with a BHN value of 200. Repeat for finish machining assuming a DOC value equal to 10% of the roughing DOC.
14. Estimate the horsepower needed to remove metal at 550 in.^{3}/min with a feed of 0.005 in./rev at a DOC value of 0.675 in. The cutting force F_c was measured at 10,000 lb. Comment on these values.
15. For a turning process, the horsepower required was 24 hp. The metal removal rate was 550 in.^{3}/min. Estimate the specific horsepower and compare to published values for 1020 steel at 200 BHN.

Machining data for 1020 steel, as-received, in air with a K3H carbide tool, orthogonally (tube cutting on lathe) with tube OD = 2.875. The cutting speed was 530 fpm. The tube wall thickness was 0.200 in. The back rake angle was zero for all cuts.

Data										
Run Number	F_c	F_t	Feed ipr ×1/1000	Chip Ratio r_c	ϕ	τ_s	U	HP_s	γ	μ
1	330	295	4.89	0.331						
2	308	280	4.89	0.381						
3	410	330	7.35	0.426						
4	420	340	7.35	0.426						
5	510	350	9.81	0.458						
6	540	395	9.81	0.453						

Chapter 20 CASE STUDY

Orthogonal Plate Machining Experiment at Auburn University

Jeremy has just been to his ISNY3800 metalcutting lab where he learned about orthogonal machining.

This lab provided him with a hands-on-experience in material cutting analysis. The experiment varied his cutting speed and uncut chip thickness (UCT), two of the most important cutting parameters in orthogonal metalcutting.

An orthogonal plate machining setup was used in the experiment. A horizontal milling machine equipped with QSD and a dynamometer was used to perform the experiment. The material for the experiment was cartridge brass. Eighteen runs were performed using 2 levels of speed, 3 levels of UCT, and 3 levels of positive rake angles. A toolmakers microscope were used to measure the thickness of the chip (t_c), and the shear angle. The cutting and thrust forces (Fc and Ft) were measured with a dynamometer. The data was recorded in Table CS-20a.

Your task is to make a table with headings for r_c, phi (ϕ), F, N, beta, Mu, F_s, Tau (τ_s), HPs, and specific energy (U). Complete the table and then discuss (using plots) the effect (on the forces and other calculated values) of the changing level in the input parameters.

TABLE CS20A The Data for OPM

RUN	ALPHA	to	V	Fc	Ft	tc
1	10	0.005	HI	92	18	0.019
2	10	0.005	LO	62	11	0.015
3	10	0.010	HI	140	35	0.020
4	10	0.010	LO	128	25	0.025
5	10	0.020	HI	270	45	0.044
6	10	0.020	LO	200	25	0.040
7	20	0.005	HI	48	4	0.011
8	20	0.005	LO	54	4	0.012
9	20	0.010	HI	110	15	0.027
10	20	0.010	LO	106	12	0.029
11	20	0.020	HI	251	30	0.041
12	20	0.020	LO	249	25	0.057
13	30	0.005	HI	55	4	0.011
14	30	0.005	LO	640	4	0.010
15	30	0.010	HI	98	14	0.028
16	30	0.010	LO	106	3	0.027
17	30	0.020	HI	170	22	0.051
18	30	0.020	LO	192	5	0.040

Hi = 16 in/min

Lo = 2 in/min

CHAPTER 21

CUTTING TOOLS FOR MACHINING

21.1 INTRODUCTION

Success in metal cutting depends on the selection of the proper cutting tool (material and geometry) for a given work material. A wide range of cutting-tool materials are available with a variety of properties, performance capabilities, and costs. These include high-carbon steels and low-/medium-alloy steels, high-speed steels, cast cobalt alloys, cemented carbides, cast carbides, coated carbides, coated high-speed steels, ceramics, cermets, whisker-reinforced ceramics, sialons, sintered polycrystalline cubic boron nitride (CBN), sintered polycrystalline diamond, and single-crystal natural diamond. Figure 21-1 shows some of these common tool materials ranked by the cutting speeds used to machine a unit volume of steel materials, assuming equal tool lives. As the speed (feed rate and DOC) increases, so does the metal removal rate. The time required to remove a given unit volume of material therefore decreases. Notice the fivefold increase in speed that the AL_2O_3-coated carbide has over the WC/Co tool (250 → 1200 sfpm). Today, approximately 85% of carbide tools are coated, almost exclusively by the *chemical vapor deposition* (CVD) process. The cutting tool (material and geometry) is the most critical aspect of the machining process. Clearly, the cutting-tool material, cutting parameters,

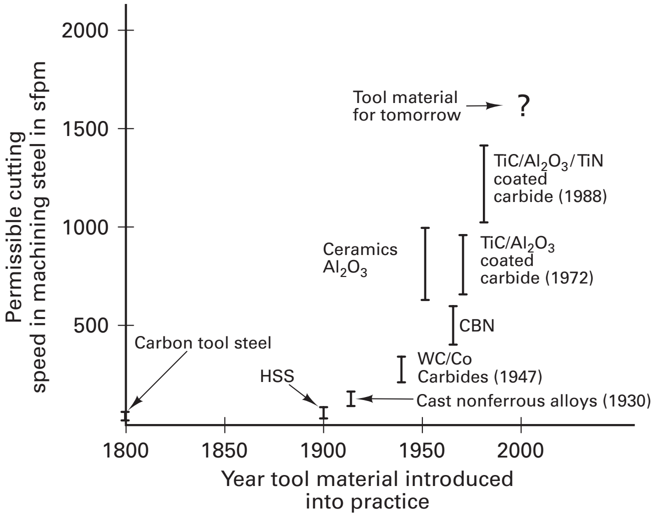

FIGURE 21-1 Improvements in cutting tool materials have led to significant increases in cutting speeds (and productivity) over the years.

and tool geometry selected directly influence the productivity of the machining operation. Figure 21-2 outlines the input variables that influence the tool material selection decision. The elements which influence the decision are:

- Work material characteristics, hardness, chemical and metallurgical state,
- Part characteristics (geometry, accuracy, finish, and surface-integrity requirements)
- Machine tool characteristics, including the workholders (adequate rigidity with high horsepower, and wide speed and feed ranges)
- Support systems (operator's ability, sensors, controls, method of lubrication, and chip removal)

Tool material technology is advancing rapidly, enabling many difficult-to-machine materials to be machined at higher removal rates and/or cutting speeds with greater performance reliability. Higher speed and/or removal rates usually improve productivity. Predictable tool performance is essential when machine tools are computer controlled with minimal operator interaction. Long tool life is desirable especially when machines become automatic or are placed in cellular manufacturing systems.

The cutting tool is subjected to severe operating conditions. Tool temperatures of 1000°C and high local stresses require that the tool have these characteristics.

1. High hardness (Figure 21-3)
2. High hardness temperature, *hot hardness* (refer to Figure 21-3)
3. Resistance to abrasion, wear due to severe sliding friction
4. Chipping of the cutting edges
5. High toughness (impact strength) (refer to Figure 21-4)
6. Strength to resist bulk deformation
7. Good chemical stability (inertness or negligible affinity with the work material)

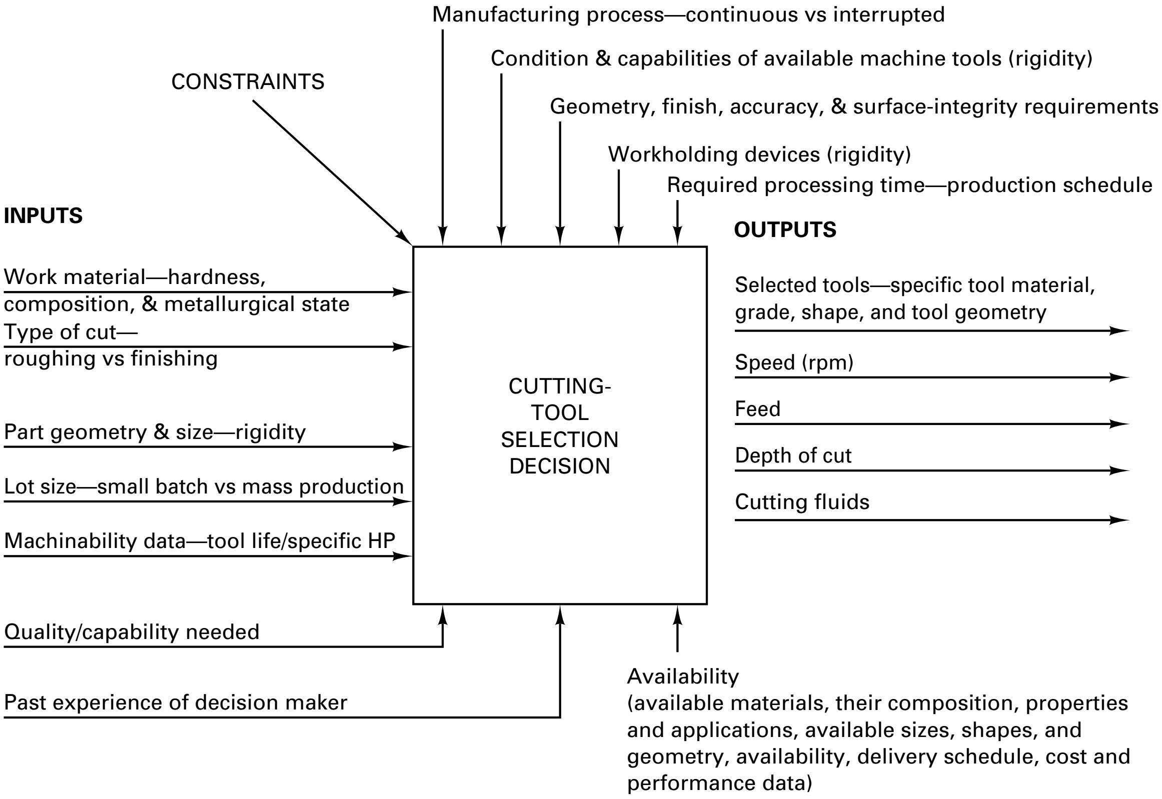

FIGURE 21-2 The selection of the cutting-tool material and geometry followed by the selection of cutting conditions for a given application depends upon many variables.

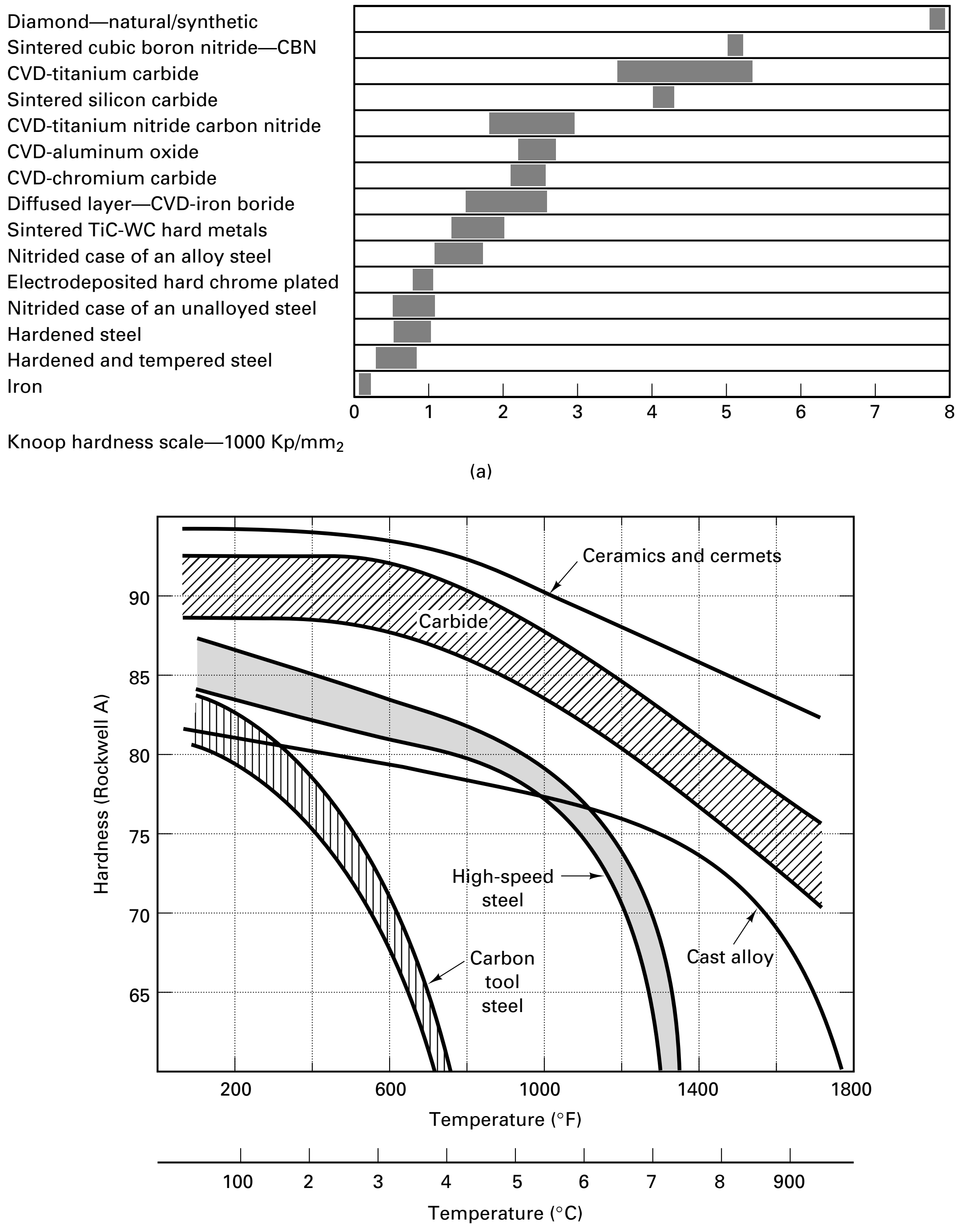

(a)

(b)

FIGURE 21-3 (a) Hardness of cutting materials and (b) decreasing hardness with increasing temperature, called hot hardness. Some materials display a more rapid drop in hardness above some temperatures. *(From* Metal Cutting Principles, *2nd ed. Courtesy of Ingersoll Cutting Tool Company.)*

8. Adequate thermal properties
9. High elastic modulus (stiffness)
10. Correct geometry and surface finish

Figure 21-5 compares these properties for various cutting-tool materials. Overlapping characteristics exist in many cases. Exceptions to the rule are very common. In many classes of tool materials, a wide range of compositions and properties are obtainable.

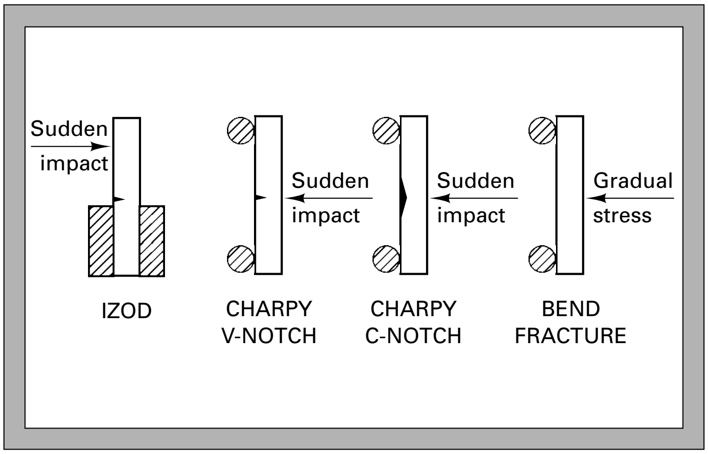

Methods of toughness testing

Toughness

Toughness (as considered for tooling materials) is the relative resistance of a material to breakage, chipping, or cracking under impact or stress. Toughness may be thought of as the opposite of brittleness. Toughness testing is not the same as standardized hardness testing. It may be difficult to correlate the results of different test methods. Common toughness tests include Charpy impact tests and bend fracture tests.

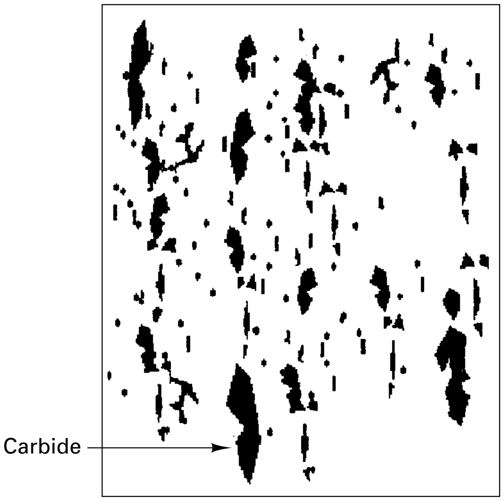

Conventional tool steel microstructure

Wear Resistance

Alloy elements (Cr, V, W, Mo) form hard carbide particles in tool steel microstructures. Amount & type present influence wear resistance.

Hardness of carbides:

• Hardened steel	• 60/65 HRC
• Chromium carbides	• 66/68 HRC
• Moly, tungsten carbides	• 72/77 HRC
• **Vanadium carbides**	• **82/84 HRC**

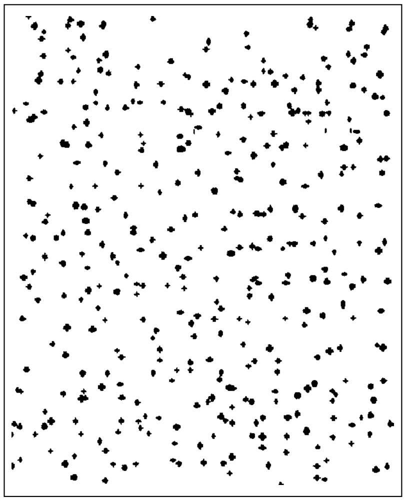

P/M tool steels microstructure

Microstructure of P/M tool steel versus conventional tool steels shows the fine carbide distribution, uniformly distributed.

FIGURE 21-4 The most important properties of tool steels are:
1. Hardness—resistance to deforming and flattening
2. Toughness—resistance to breakage and chipping
3. Wear resistance—resistance to abrasion and erosion.

FIGURE 21-5 Salient Properties of Cutting Tool Materials[a]

	Carbon and Low-/Medium-Alloy Steels	High-Speed Steels	Sintered Cemented Carbides	Coated HSS	Coated Carbides	Ceramics	Polycrystalline CBN	Diamond
Toughness	▶——— Decreasing ———▶							
Hot hardness	▶——— Increasing ———▶							
Impact strength	◀——— Decreasing ———◀							
Wear resistance	▶——— Increasing ———▶							
Chipping resistance	◀——— Decreasing ———◀							
Cutting speed	▶——— Increasing ———▶							
Depth of cut	Light to medium	Light to heavy	Light to heavy	Light to heavy	Light to heavy	Light to heavy	Light to heavy	Very light for single-crystal diamond
Finish obtainable	Rough	Rough	Good	Good	Good	Very good	Very good	Excellent
Method of manufacture	Wrought	Wrought cast, HIP sintering	Cold pressing and sintering, PM	PVD[b] after forming	CVD[c]	Cold pressing and sintering or HIP sintering	High-pressure–high-temperature sintering	High-pressure–high-temperature sintering
Fabrication	Machining and grinding	Machining and grinding	Grinding	Machining and grinding, coating	Grinding before coating	Grinding	Grinding and polishing	Grinding and polishing
Thermal shock resistance	▶——— Increasing ———▶							
Tool material cost	▶——— Increasing ———▶							

---

[a] Overlapping characteristics exist in many cases. Exceptions to the rule are very common. In many classes of tool materials, a wide range of compositions and properties are obtainable.

[b] Physical vapor deposition.

[c] Chemical vapor deposition.

Figure 21-3 compares various tool materials on the basis of hardness, the most critical characteristic, and hot hardness (hardness decreases slowly with temperature). Figure 21-4 compares hot hardness with toughness, or the ability to take impacts during interrupted cutting. Naturally, it would be wonderful if these materials were also easy to fabricate, readily available, and inexpensive, since cutting tools are routinely replaced, but this is not usually the case. Obviously, many of the requirements conflict and therefore tool selection will always require trade-offs.

■ 21.2 CUTTING-TOOL MATERIALS

In nearly all machining operations, cutting speed and feed are limited by the capability of the tool material. Speeds and feeds must be kept low enough to provide for an acceptable tool life. If not, the time lost changing tools may outweigh the productivity gains from increased cutting speed. Coated high-speed steel (HSS) and uncoated and coated carbides are currently the most extensively used tool materials.

Coated tools cost only about 15 to 20% more than uncoated tools, so a modest improvement in performance can justify the added cost. About 15 to 20% of all tool steels are coated, mostly by the *physical vapor deposition* (PVD) processes. Diamond and CBN are used for applications in which, despite higher cost, their use is justified. Cast cobalt alloys are being phased out because of the high raw-material cost and the increasing availability of alternate tool materials. New ceramic materials called *cermets* (ceramic material in a metal binder) are having a significant impact on future manufacturing productivity.

Tool requirements for other processes that use noncontacting tools, as in electrodischarge machining (EDM) and electrochemical machining (ECM), or *no tools at all* (as in laser machining), are discussed in Chapter 20. Grinding abrasives will be discussed in Chapter 29.

TOOL STEELS

Carbon steels and low-/medium-alloy steels, called *tool steels,* were once the most common cutting-tool materials. Plain-carbon steels of 0.90 to 1.30% carbon when hardened and tempered have good hardness and strength and adequate toughness and can be given a keen cutting edge. However, tool steels lose hardness at temperatures above 400°F because of tempering and have largely been replaced by other materials for metal cutting.

The most important properties for tool steels are hardness, hot hardness, and toughness. Low-/medium-alloy steels have alloying elements such as Mo and Cr, which improve hardenability, and W and Mo, which improve wear resistance. These tool materials also lose their hardness rapidly when heated to about their tempering temperature of 300° to 650°F, and they have limited abrasion resistance. Consequently, low-/medium-alloy steels are used in relatively inexpensive cutting tools (e.g., drills, taps, dies, reamers, broaches, and chasers) for certain low-speed cutting applications when the heat generated is not high enough to reduce their hardness significantly. High-speed steels, cemented carbides, and coated tools are also used extensively to make these kinds of cutting tools. Although more expensive, they have longer tool life and improved performance. These steels greatly benefit from P/M manufacturing due to uniformly distributed carbides.

HIGH-SPEED STEELS

First introduced in 1900 by F. W. Taylor and White, high-alloy steel is superior to tool steel in that it retains its cutting ability at temperatures up to 1100°F, exhibiting good "red hardness." Compared with tool steel, it can operate at about double or triple cutting speeds to about 100 sfpm with equal life, resulting in its name: *high-speed steel*, often abbreviated HSS.

Today's high-speed steels contain significant amounts of W, Mo, Co, V, and Cr besides Fe and C. W, Mo, Cr, and Co in the ferrite as a solid solution provide strengthening of the matrix beyond the tempering temperature, thus increasing the hot hardness. Vanadium (V), along with W, Mo, and Cr, improves hardness (R_c 65–70) and wear resistance. Extensive solid solutioning of the matrix also ensures good hardenability of these steels.

Although many formulations are used, a typical composition is that of the 18-4-1 type (tungsten 18%, chromium 4%, vanadium 1%), called T1. Comparable performance can also be obtained by the substitution of approximately 8% molybdenum for the tungsten, referred to as a tungsten equivalent (W_{eq}). High-speed steel is still widely used for drills and many types of general-purpose milling cutters and in single-point tools used in general machining. For high-production machining, it has been replaced almost completely by carbides, coated carbides, and coated HSS.

HSS main strengths are:

- Great toughness—superior transverse rupture strength
- Easily fabricated
- Best for sever applications where complex tool geometry is needed (gear cutters, taps, drills, reamers, dies)

High-speed steel tools are fabricated by three methods: cast, wrought, and sintered (using the powder metallurgy technique). Improper processing of cast and wrought products can result in carbide segregation, formation of large carbide particles and significant variation of carbide size, and nonuniform distribution of carbides in the matrix. The material will be difficult to grind to shape and will cause wide fluctuations of properties, inconsistent tool performance, distortion, and cracking.

To overcome some of these problems, a powder metallurgy technique has been developed that uses the hot-isostatic pressing (HIP) process on atomized, prealloyed tool steel mixtures. Because the various constituents of the P/M alloys are "locked" in place by the compacting procedure, the end product is a more homogeneous alloy, Figure 21-4. P/M high-speed steel cutting tools exhibit better grindability, greater toughness, better wear resistance, and higher red (or hot) hardness; they also perform more consistently. They are about double the cost of regular HSS.

TiN-COATED HIGH-SPEED STEELS

Coated high-speed steel provides significant improvements in cutting speeds, with increases of 10 to 20% being typical. First introduced in 1980 for gear cutters (hobs) and in 1981 for drills, TiN-coated HSS tools have demonstrated their ability to more than pay for the extra cost of the coating process.

In addition to hobs, gear-shaper cutters, and drills, HSS tooling coated by TiN now includes reamers, taps, chasers, spade-drill blades, broaches, bandsaw and circular saw blades, insert tooling, form tools, end mills, and an assortment of other milling cutters.

Physical vapor deposition has proved to be the most viable process for coating HSS, primarily because it is a relatively low-temperature process that does not exceed the tempering point of HSS. Therefore, no subsequent heat treatment of the cutting tool is required. Films 0.0001 to 0.0002 in. in thickness adhere well and withstand minor elastic, plastic, and thermal loads. Thicker coatings tend to fracture under the typical thermomechanical stresses of machining.

There are many variations to the PVD process, as outlined in Table 21-1. The process usually depends on gas pressure and is performed in a vacuum chamber. PVD processes are carried out with the workpieces heated to temperatures in the range of 400° to 900°F. Substrate heating enhances coating adhesion and film structure.

Because surface pretreatment is critical in PVD processing, tools to be coated are subject to a vigorous cleaning process. Precleaning methods typically involve degreasing, ultrasonic cleaning, and Freon drying. Deburring, honing, and more active cleaning methods are also used.

The advantages of TiN-coated HSS tooling include reduced tool wear. Less tool wear results in less stock removal during tool regrinding, thus allowing individual tools to be reground more times. For example, a TiN hob can cut 300 gears per sharpening; the uncoated tool would cut only 75 parts per sharpening. Therefore the cost per gear is reduced from 20 cents to 2 cents. Naturally, reduced tool wear means longer tool life.

Higher hardness, with typical values for the thin coatings, "equivalent" to R_c 80–85, as compared to R_c 65–70 for hardened HSS, means reduced abrasion wear. Relative inertness (i.e., TiN does not react significantly with most workpiece materials) results in

TABLE 21-1 Surface Treatments for Cutting Tools

Process	Method	Hardness[a] and Depth	Advantages	Limitations
Black oxide	HSS cutting tools are oxidized in a steam atmosphere at 1000°F	No change in prior steel hardness	Prevents built-up edge formations in machining of steel.	Strictly for HSS tools.
Nitriding case hardening	Steel surface is coated with nitride layer by use of cyanide salt at 900° to 1600°F, or ammonia, gas, or N_2 ions.	To 72 R_c; Case depth: 0.0001 to 0.100 in.	High production rates with bulk handling. High surface hardness. Diffuses into the steel surfaces. Simulates strain hardening.	Can only be applied to steel. Process has embrittling effect because of greater hardness. Post-heat treatment needed for some alloys.
Electrolytic electroplating	The part is the cathode in a chromic acid solution; anode is lead. Hard chrome plating is the most common process for wear resistance.	70-72 R_c; 0.0002 to 0.100 in.	Low friction coefficient, antigalling. Corrosion resistance. High hardness.	Moderate production; pieces must be fixtured. Part must be very clean. Coating does not diffuse into surface, which can affect impact properties.
Vapor deposition chemical vapor deposition (CVD)	Deposition of coating material by chemical reactions in the gaseous phase. Reactive gases replace a protective atmosphere in a vacuum chamber, At temperatures of 1800° to 1200°F, a thin diffusion zone is created between the base metal and the coating.	To 84 R_c; 0.0002 to 0.0004 in.	Large quantities per batch. Short reaction times reduce substrate stresses. Excellent adhesion, recommended for forming tools. Multiple coatings can be applied (TiN, TiC, AL_2O_3). Line-of-sight not a problem.	High temperatures can affect substrate metallurgy, requiring post-heat treatment, which can cause dimensional distortion (except when coating sintered carbides). Necessary to reduce effects of hydrogen chloride on material properties, such as impact strength. Usually not diffused. Tolerances of +0.001 required for HSS tools.
Physical vapor desposition (PVD sputtering)	Plasma is generated in a vacuum chamber by ion bombardment to dislodge particles from a target made of the coating material. Metal is evaporated and is condensed or attracted to substrate surfaces.	To 84 R_c; To 0.0002 in. thick	A useful experimental procedure for developing wear surfaces. Can coat substrates with metals, alloys, compounds, and refractories. Applicable for all tooling.	Not a high-production method. Requires care in cleaning.Usually not diffused.
PVD (electron beam)	A plasma is generated in vacuum by evaporation from a molten pool that is heated by an electron-beam gun.	To 84 R_c; To 0.0002 in. thick	Can coat reasonable quantities per batch cycle. Coating materials are metals, compounds, alloys, and refractories. Substrate metallurgy is preserved. Very good adhesion. Fine particle deposition. Applicable for all tooling.	Parts require fixturing and orientation in line-of-sight process. Ultra-cleanliness required.
PVD/ARC	Titanium is evaporated in a vacuum and reacted with nitrogen Gas. Resulting titanium nitride plasma is ionized and electrically attracted to the substrate surface. A high-energy process with multiple plasma guns.	To 85 R_c; To 0.0002 in. thick	Process at 900°F preserves substrate metallurgy. Excellent coating adhesion. Controllable deposition of grain size and growth. Dimensions, surface finish, and sharp edges are preserved. Can coat all high-speed steels without distortion.	Parts must be fixtured for line-of-sight process. Parts must be very clean. No by-products formed in reaction. Usually only minor diffusion.

[a] Rockwell hardness values above 68 are estimates.

greater tool life through a reduction in adhesion. TiN coatings have a low coefficient of friction. This can produce an increase in the shear angle, which in turn reduces the cutting forces, spindle power, and heat generated by the deformation processes. PVD coatings generally fail in high-stress applications such as cold extrusion, piercing, roughing, and high-speed machining.

CAST COBALT ALLOYS

Cast cobalt alloys, popularly known as *stellite tools*, are cobalt-rich, chromium–tungsten–carbon cast alloys having properties and applications in the intermediate range between high-speed steel and cemented carbides. Although comparable in room-temperature hardness to high-speed steel tools, cast cobalt alloy tools retain their hardness to a much higher temperature. Consequently, they can be used at higher cutting speeds (25% higher) than HSS tools. Cast cobalt alloys are hard as cast and cannot be softened or heat treated.

Cast cobalt alloys contain a primary phase of Co-rich solid solution strengthened by Cr and W and dispersion hardened by complex hard, refractory carbides of W and Cr. Other elements added include V, B, Ni, and Ta. The casting provides a tough core and elongated grains normal to the surface. The structure is not, however, homogeneous.

Tools of cast cobalt alloys are generally cast to shape and finished to size by grinding. They are available only in simple shapes, such as single-point tools and saw blades, because of limitations in the casting process and the expense involved in the final shaping (grinding). The high cost of fabrication is primarily due to the high hardness of the material in the as-cast condition. Materials machinable with this tool material include plain-carbon steels, alloy steels, nonferrous alloys, and cast iron.

Cast cobalt alloys are currently being phased out for cutting-tool applications because of increasing costs, shortages of strategic raw materials (Co, W, and Cr), and the development of other, superior tool materials at lower cost.

CARBIDE OR SINTERED CARBIDES

Carbide cutting-tool inserts are traditionally divided into two primary groups:

1. Straight tungsten grades, which are used for machining cast irons, austenitic stainless steel, and nonferrous and nonmetallic materials.
2. Grades containing major amounts of titanium, tantalum, and or columbium carbides, which are used for machining ferritic workpieces. There are also the titanium carbide grades, which are used for finishing and semifinishing ferrous alloys.

The classification of carbide insert grades employs a C-classification system in the United States and ISO P and M classification system in Europe and Japan. These classifications are based on application, rather than composition or properties. Each cutting-tool vendor can provide proprietary grades and recommended applications.

Carbides, which are nonferrous alloys, are also called *sintered* (or cemented) carbides because they are manufactured by powder metallurgy techniques. The P/M process is outlined in Figure 21-6. See Chapter 16 for details on powder metallurgy processes. These materials became popular during World War II, as they afforded a four- or five-fold increase in cutting speeds. The early versions had tungsten carbide as the major constituent, with a cobalt binder in amounts of 3 to 13%. Most carbide tools in use today

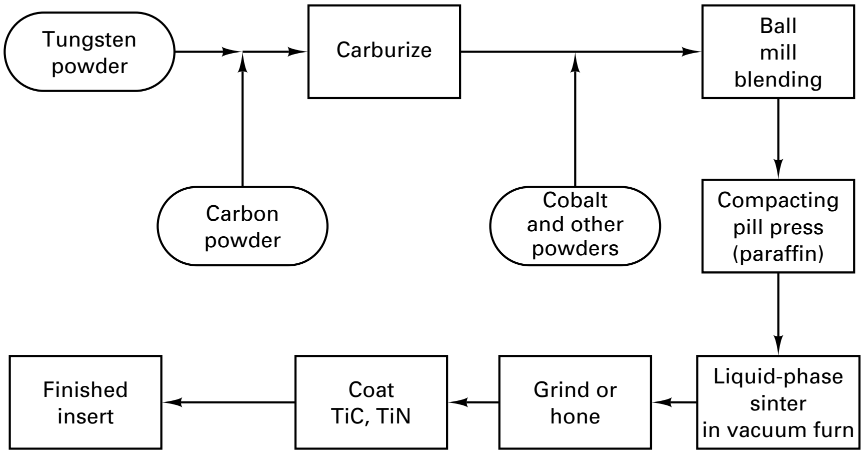

Tungsten is carburized in a high-temperature furnace, mixed with cobalt and blended in large ball mills. After ball milling, the powder is screened and dried. Paraffin is added to hold the mixture together for compacting. Carbide inserts are compacted using a pill press. The compacted powder is sintered in a high-temperature vacuum furnace.The solid cobalt dissolves some tungsten carbide, then melts and fills the space between adjacent tungsten carbide grains. As the mixture is cooled, most of the dissolved tungsten carbide precipitates onto the surface of existing grains. After cooling, inserts are finish ground and honed or used in the pressed condition.

FIGURE 21-6 P/M process for making cemented carbide insert tools.

are either straight WC or multicarbides of W-Ti or W-Ti-Ta, depending on the work material to be machined. Cobalt is the binder. These tool materials are much harder, are chemically more stable, have better hot hardness, have high stiffness, have lower friction, and operate at higher cutting speeds than HSS. They are more brittle and more expensive and use strategic metals (W, Ta, Co) more extensively.

Cemented carbide tool materials based on TiC have been developed primarily for auto industry applications using predominantly Ni and Mo as a binder. These are used for higher-speed (>1000 ft/min) finish machining of steels and some malleable cast irons.

Cemented carbide tools are available in insert form in many different shapes: squares, triangles, diamonds, and rounds. They can be either brazed or mechanically clamped onto the tool shank. Mechanical clamping (Figure 21-7) is more popular because when one edge or corner becomes dull, the insert is rotated or turned over to expose a new cutting edge. Mechanical inserts can be purchased in the as-pressed state or the insert can be ground to closer tolerances. Naturally, precision-ground inserts cost more. Any part tolerance less than ±0.003 normally cannot be manufactured without radial adjustment of the cutting tool, even with ground inserts. If no radial adjustment is performed, precision-ground inserts should be used only when the part tolerance is between ±0.006 and ±0.003. Pressed inserts have an application advantage because the cutting edge is unground and thus does not leave grinding marks on the part after machining. Ground inserts can break under heavy cutting loads because the grinding marks on the insert produce stress concentrations that result in brittle fracture. Diamond grinding is used to finish carbide tools. Abusive grinding can lead to thermal cracks and premature (early) failure of the tool. Brazed tools have the carbide insert brazed to the steel tool shank. These tools will have a more accurate geometry than the mechanical insert tools, but they are more expensive. Since cemented carbide tools are relatively brittle, a 90° corner angle at the cutting edge is desired. To strengthen the edge and prevent edge chipping, it is rounded off by honing, or an appropriate chamfer or a negative land (a T-land) on the rake face is provided. The preparation of the cutting edge can affect tool life. The sharper the edge (smaller edge radius), the more likely the edge is to chip or break. Increasing the edge radius will increase the cutting forces, so a trade-off is required. Typical edge radius values are 0.001 to 0.003 in.

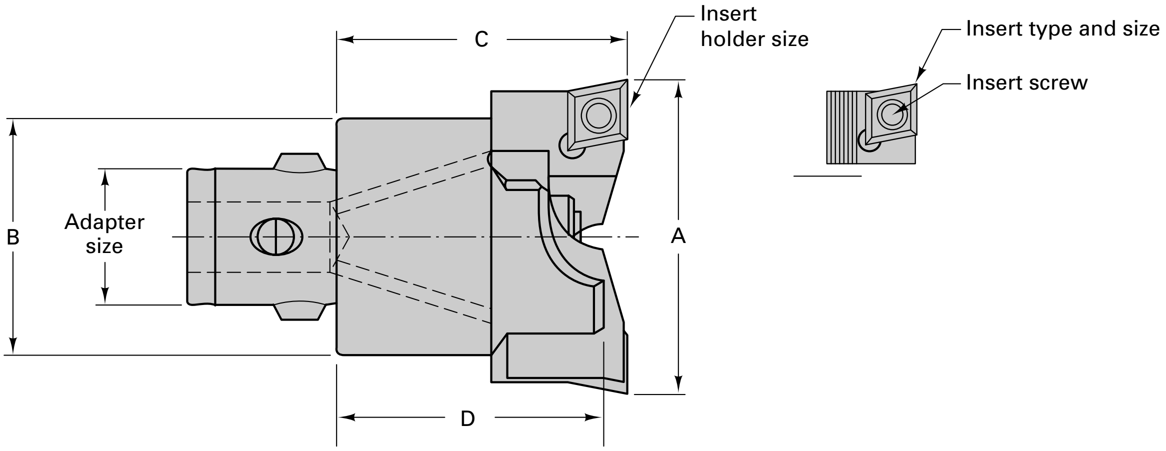

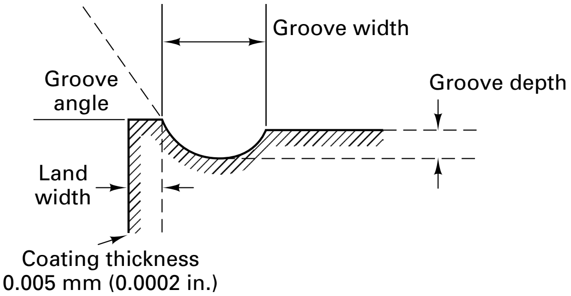

FIGURE 21-7 Boring head with carbide insert cutting tools. These inserts have a chip groove that can cause the chips to curl tightly and break into small, easily disposed lengths.

A *chip groove* (see Figure 21-7) with a positive rake angle at the tool tip may also be used to reduce cutting forces without reducing the overall strength of the insert significantly. The groove also breaks up the chips for easier disposal by causing them to curl tightly.

For very low-speed cutting operations, the chips tend to weld to the tool face and cause subsequent microchipping of the cutting edge. Cutting speeds are generally in the range of 150 to 600 ft/min. Higher speeds (>1000 ft/min) are recommended for certain less-difficult-to-machine materials (such as aluminum alloys) and much lower speeds (100 ft/min) for more difficult-to-machine materials (such as titanium alloys). In interrupted cutting applications, it is important to prevent edge chipping by choosing the appropriate cutter geometry and cutter position with respect to the workpiece. For interrupted cutting, finer grain size and higher cobalt content improve toughness in straight WC-Co grades.

After use, carbide inserts (called disposable or throwaway inserts) are generally recycled in order to reclaim the Ta, WC, and Co. This recycling not only conserves strategic materials but also reduces costs. A new trend is to regrind these tools for future use where the actual size of the insert is not of critical concern.

COATED-CARBIDE TOOLS

Beginning in 1969 with TiC-coated WC, coated tools became the norm in the metalworking industry because coating can consistently improve tool life 200 or 300% or more. In cutting tools, material requirements at the surface of the tool need to be abrasion resistant, hard, and chemically inert to prevent the tool and the work material from interacting chemically with each other during cutting. A thin, chemically stable, hard refractory coating of TiC, TiN, or AL_2O_3 accomplishes this objective. The bulk of the tool is a tough, shock-resistant carbide that can withstand high-temperature plastic deformation and resist breakage. The result is a composite tool as shown in Figure 21-8.

To be effective, the coatings should be hard, refractory, chemically stable, and chemically inert to shield the constituents of the tool and the workpiece from interacting chemically under cutting conditions. The coatings must be fine grained, free of binders and porosity. Naturally, the coatings must be metallurgically bonded to the substrate. Interface coatings are graded to match the properties of the coating and the substrate. The coatings must be thick enough to prolong tool life but thin enough to prevent brittleness.

Coatings should have a low coefficient of friction so the chips do not adhere to the rake face. Coating materials include single coatings of TiC, TiN, Al_2O_3, HfN, or HfC. Multiple coatings are used, with each layer imparting its own characteristic to the tool. Successful coating combinations include TiN/TiC/TiCN/TiN and TiC/Al_2O_3/TiN. Chemical vapor deposition is used to obtain coated carbides. The coatings are formed by chemical reactions that take place only on or near the substrate. Like electroplating, CVD is a process in which the deposit is built up atom by atom. It is therefore capable of producing deposits of maximum density and of closely reproducing fine detail on the substrate surface.

Control of critical variables such as temperature, gas concentration, and flow pattern is required to assure adhesion of the coating to the substrate. The coating-to-substrate adhesion must be better for cutting-tool inserts than for most other coatings applications to survive the cutting pressure and temperature conditions without flaking off. Grain size and shape are controlled by varying temperature and/or pressure.

The purpose of multiple coatings is to tailor the coating thickness for prolonged tool life. Multiple coatings allow a stronger metallurgical bond between the coating and the substrate and provide a variety of protection processes for machining different work materials, thus offering a more general-purpose tool material grade. A very thin final coat of TiN coating (μm) can effectively reduce crater formation on the tool face by one to two orders of magnitude relative to uncoated tools.

Coated inserts of carbides are finding wide acceptance in many metalcutting applications. Coated tools have two or three times the wear resistance of the best uncoated tools with the same breakage resistance. This results in a 50 to 100% increase in speed for the same tool life. Because most coated inserts cover a broader application range, fewer

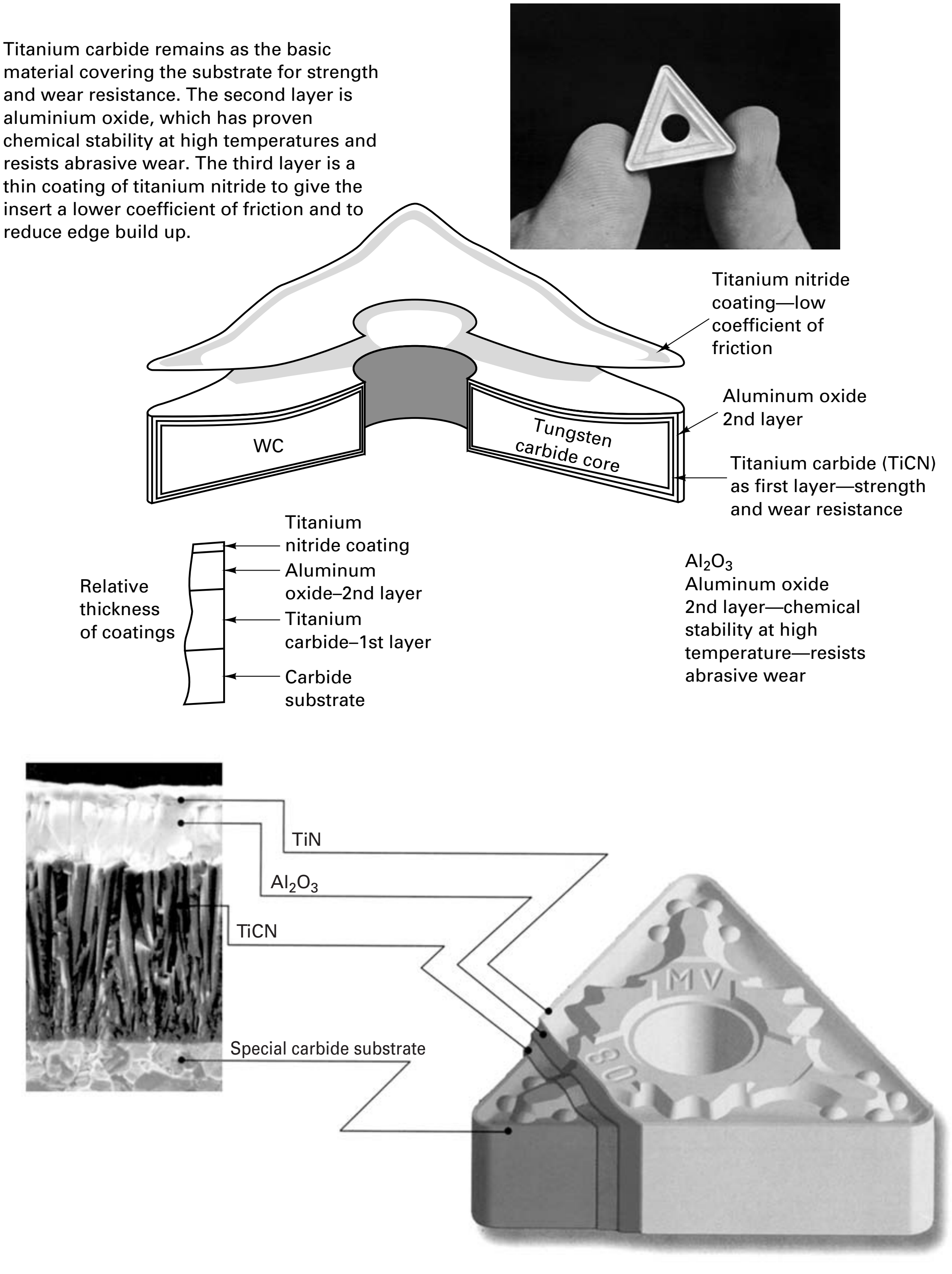

Titanium carbide remains as the basic material covering the substrate for strength and wear resistance. The second layer is aluminium oxide, which has proven chemical stability at high temperatures and resists abrasive wear. The third layer is a thin coating of titanium nitride to give the insert a lower coefficient of friction and to reduce edge build up.

FIGURE 21-8 Triple-coated carbide tools provide resistance to wear and plastic deformation in machining of steel, abrasive wear in cast iron, and built-up edge formation.

grades are needed, and therefore inventory costs are lower. Aluminum oxide coatings have demonstrated excellent crater wear resistance by providing a chemical diffusion reaction barrier at the tool–chip interface, permitting a 90% increase in cutting speeds in machining some steels.

Coated-carbide tools have progressed to the place where in the United States about 80 to 90% of the carbide tools used in metalworking are coated.

CERAMICS

Ceramics are made of pure *aluminum oxide*, Al_2O_3, or Al_2O_3 used as a metallic binder. Using P/M, very fine particles are formed into cutting tips under a pressure of 20 to 28 tons/in.^{2} (267 to 386 MPa) and sintered at about 1800°F (1000°C). Unlike the case with ordinary ceramics, sintering occurs without a vitreous phase.

Ceramics are usually in the form of disposable tips. They can be operated at two to three times the cutting speeds of tungsten carbide. They almost completely resist cratering, run with no coolant, and have about the same tool life at their higher speeds as tungsten carbide does at lower speeds. As shown in Table 21-2, ceramics are usually as hard as carbides but are more brittle (lower bend strength) and therefore require more rigid tool holders and machine tools in order to take advantage of their capabilities. Their hardness and chemical inertness make ceramics a good material for high-speed finishing and/or high-removal-rate machining applications of superalloys, hard-chill cast iron, and high-strength steels. Because ceramics have poor thermal and mechanical shock resistance, interrupted cuts and interrupted application of coolants can lead to premature tool failure. Edge chipping is usually the dominant mode of tool failure. Ceramics are not suitable for aluminum, titanium, and other materials that react chemically with alumina-based ceramics. Recently, whisker-reinforced ceramic materials that have greater transverse rupture strength have been developed. The whiskers are made from silicon carbide.

CERMETS

Cermets are a new class of tool materials best suited for finishing. Cermets are ceramic TiC, nickel, cobalt, and tantalum nitrides. TiN and other carbides are used for binders. Cermets have superior wear resistance, longer tool life, and can operate at higher cutting speeds with superior wear resistance. Cermets have higher hot hardness and oxidation resistance than cemented carbides. The better finish imparted by a cermet is due to its low level of chemical reaction with iron [less cratering and *built-up edge* (BUE)]. Compared to carbide, the cermet has less toughness, lower thermal conductivity, and greater thermal expansion, so thermal cracking can be a problem during interrupted cuts.

Cermets are usually cold pressed, and proper processing techniques are required to prevent insert cracking. New cermets are designed to resist thermal shocking during milling by using high nitrogen content in the titanium carbonitride phase (produces finer grain size) and adding WC and TaC to improve shock resistance. PVD-coated cermets have the wear resistance of cermets and the toughness range of a coated carbide, and they perform well with a coolant.

Figure 21-9 shows a comparison of speed feed coverage of typical cermets compared to ceramics, carbides, and coated carbides. The values illustrate that cermets can clearly cover a wide range of important metalcutting applications.

DIAMONDS

Diamond is the hardest material known. Industrial diamonds are now available in the form of polycrystalline compacts, which are finding industrial application in the ma-

TABLE 21-2 Properties of Cutting-Tool Materials Compared for Carbides, Ceramics, HSS, and Cast Cobalt[a]

	Hardness Rockwell A or C	Transverse Rupture (bend) Strength ($\times 10^3$ psi)	Compressive Strength ($\times 10^3$ psi)	Modulus of Elasticity (e)($\times 10^6$ psi)
Carbide C1–C4	90–95 R_A	250–320	750–860	89–93
Carbide C5–C8	91–93 R_A	100–250	710–840	66–81
High-speed steel	86 R_A	600	600–650	30
Ceramic (oxide)	92–94 R_A	100–125	400–650	50–60
Cast cobalt	46–62 R_C	80–120	220–335	40

[a] Exact properties depend upon materials, grain size, bonder content, volume.

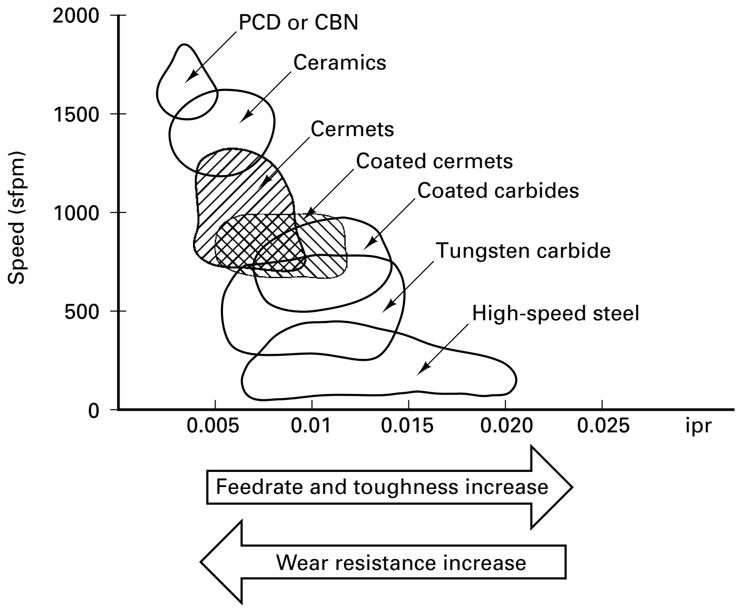

Tool Material Group	General Applications	Versus Cermet
PCD (polycrystal diamond)	High-speed machining of aluminum alloys, nonferrous metals, and nonmetals.	Cermets can machine same materials, but at lower speeds and significantly less cost per corner.
CBN (cubic boron nitride)	Hard workpieces and high-speed machining on cast irons.	Cermets cannot machine the harder workpieces that CBN can. Cermets cannot machine cast iron at the speeds CBN can. The cost per corner of cermets is significantly less.
Ceramics (cold press)	High-speed turning and grooving of steels and cast iron.	Cermets are more versatile and less expensive than cold press ceramics but cannot run at the higher speeds.
Ceramics (hot press)	Turning and grooving of hard workpieces; high-speed finish machining of steels and irons.	Cermets cannot machine the harder workpieces or run at the same speeds on steels and irons but are more versatile and less expensive.
Ceramics (silicon nitride)	Rough and semirough machining of cast irons in turning and milling applications at high speeds and under unfavorable conditions.	Cermets cannot machine cast iron at the high speeds of silicon nitride ceramics, but in moderate-speed applications cermets may be more cost effective.
Coated carbide	General-purpose machining of steels, stainless steels, cast iron, etc.	Cermets can run at higher cutting speeds and provide better tool life at less cost for semiroughing to finishing applications.
Carbides	Tough material for lower-speed applications on various materials.	Cermets can run at higher speeds, provide better surface finishes and longer tool life for semiroughing to finishing applications.

FIGURE 21-9 Comparison of cermets with various cutting-tool materials.

chining of aluminum, bronze, and plastics, greatly reducing the cutting forces as compared to carbides. Diamond machining is done at high speeds, with fine feeds for finishing, and produces excellent finishes. Recently, *single-crystal* diamonds, with a cutting-edge radius of 100 Å or less, have been used for precision machining of large mirrors. However, single-crystal diamonds have been used for years to machine brass watch faces, thus eliminating polishing. They have also been used to slice biological materials into thin films for viewing in transmission electron microscopes. (This process, known as ultramicrotomy, is one of the few industrial versions of orthogonal machining in common practice.)

The salient features of diamond tools include high hardness; good thermal conductivity; the ability to form a sharp edge of cleavage (single-crystal, natural diamond); very low friction; nonadherence to most materials; the ability to maintain a sharp edge for a long period of time, especially in machining soft materials such as copper and aluminum; and good wear resistance.

To be weighed against these advantages are some shortcomings, which include a tendency to interact chemically with elements of Group IVB to Group VIII of the periodic table. In addition, diamond wears rapidly when machining or grinding mild steel. It wears less rapidly with high-carbon alloy steels than with low-carbon steel and has occasionally machined gray cast iron (which has high carbon content) with long life. Diamond has a tendency to revert at high temperatures (700°C) to graphite and/or to oxidize in air. Diamond is very brittle and is difficult and costly to shape into cutting tools, the process for doing the latter being a tightly held industry practice.

The limited supply of, increasing demand for, and high cost of natural diamonds led to the ultra-high-pressure (50 Kbar), high-temperature (1500°C) synthesis of diamond from graphite at the General Electric Company in the mid-1950s and the subsequent development of *polycrystalline* sintered diamond tools in the late 1960s.

Polycrystalline diamond (PCD) tools consist of a thin layer (0.5 to 1.5 mm) of fine grain size diamond particles sintered together and metallurgically bonded to a cemented carbide substrate. A high-temperature/high-pressure process, using conditions close to those used for the initial synthesis of diamond, is needed. Fine diamond powder (1 to 30 μm) is first packed on a support base of cemented carbide in the press. At the appropriate sintering conditions of pressure and temperature in the diamond stable region, complete consolidation and extensive diamond-to-diamond bonding take place. Sintered diamond tools are then finished to shape, size, and accuracy by laser cutting and grinding. See Figure 21-10. The cemented carbide provides the necessary elastic support for the hard and brittle diamond layer above it. The main advantages of sintered polycrystalline tools over natural single-crystal tools are better quality, greater toughness, and improved wear resistance, resulting from the random orientation of the diamond grains and the lack of large cleavage planes.

Diamond tools offer dramatic performance improvements over carbides. Tool life is often greatly improved, as is control over part size, finish, and surface integrity.

Positive rake tooling is recommended for the vast majority of diamond tooling applications. If BUE is a problem, increasing cutting speed and using more positive rake angles may eliminate it. If edge breakage and chipping are problems, one can reduce the feed rate. Coolants are not generally used in diamond machining unless, as in the machining of plastics, it is necessary to reduce airborne dust particles. Diamond tools can be reground.

There is much commercial interest in being able to coat HSS and carbides directly with diamond, but getting the diamond coating to adhere reliably has been difficult. Diamond-coated inserts would deliver roughly the same performance as PCD tooling when cutting nonferrous materials but could be given more complex geometries and chip breakers while reducing the cost per cutting edge.

POLYCRYSTALLINE CUBIC BORON NITRIDES

Polycrystalline cubic boron nitride (PCBN) is a man-made tool material widely used in the automotive industry for machining hardened steels and superalloys. It is made in a compact form for tools by a process quite similar to that used for sintered polycrystalline diamonds. It retains its hardness at elevated temperatures (Knoop 4700 at 20°C, 4000 at 1000°C) and has low chemical reactivity at the tool–chip interface. This material can be used to machine hard aerospace materials like Inconel 718 and René 95 as well as chilled cast iron.

Although not as hard as diamond, PCBN is less reactive with such materials as hardened steels, hard-chill cast iron, and nickel- and cobalt-based superalloys. PCBN can be used efficiently and economically to machine these difficult-to-machine materi-

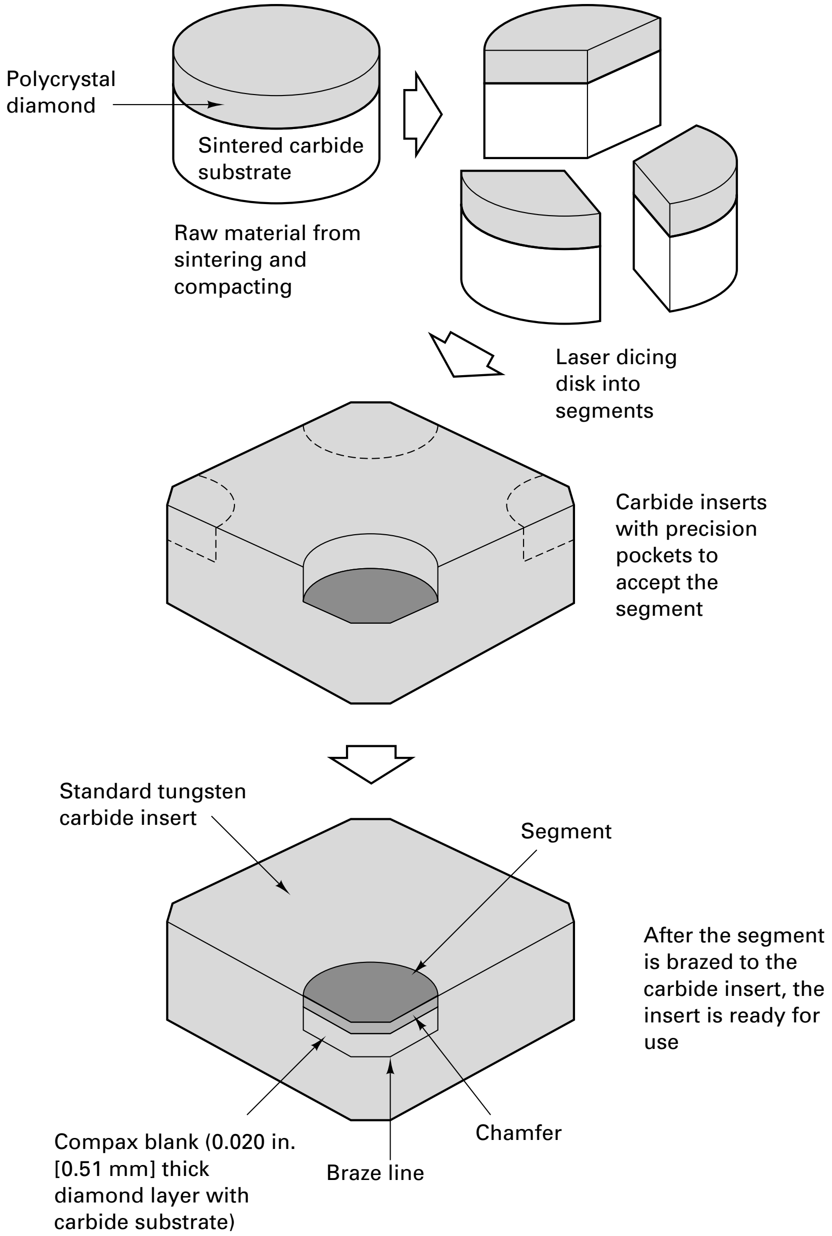

FIGURE 21-10 Polycrystalline diamond tools are carbides with diamond inserts. They are restricted to simple geometries.

als at higher speeds (fivefold) and with a higher removal rate (fivefold) than cemented carbide, and with superior accuracy, finish, and surface integrity. PCBN tools are available in basically the same sizes and shapes as sintered diamond and are made by the same process. The cost of an insert is somewhat higher than either cemented carbide or ceramic tools, but the tool life may be five to seven times that of a ceramic tool. Therefore, to see the economy of using PCBN tools, it is necessary to consider all the factors.

Here is an industrial example of analysis of tooling economics, where a comparison is being made between two tool materials (insert tools). A manufacturer of diesel engines is producing an in-line six-cylinder engine block that is machined on a transfer line. Each cylinder hole must be bored to accept a sleeve liner. This operation has a depth of cut of 0.062 in. per side, for a total of 0.125 in. stock removal. The tolerance on this bore is ±0.001 in. and the spindle is operating at 2000 sfpm. Ceramic inserts are used on this operation, but with these inserts, wear was severe enough to require indexing after only 35 pieces. The ceramic insert was replaced with PCBN inserts made of a high-content BCN. Both inserts had a 0.001- to 0.002-in. radius hone for edge preparation.

Table 21-3 is a cost comparison between the ceramic and PCBN insert. The PCBN insert used in the application is a full-top PCBN insert, meaning that the entire top of the insert is a layer of PCBN material. At first glance the PCBN tool appears to be extremely expensive. Each insert costs $208.00 and provides only three usable edges, whereas the ceramic insert costs $14.90 and provides six usable edges. However, the ceramic tool must be indexed every 35 pieces. The PCBN tool is indexed every 500 pieces. The cost per bore, including insert cost and the cost of labor to perform indexing, comes to $0.125 per bore for the ceramic tool and $0.142 per bore for the PCBN tool. This appears to make the ceramic tool more cost-effective, but downtime for indexing has not been accounted for. In this application, the ceramic insert required 10.75 hours of downtime for indexing, whereas the PCBN tool required only 0.75 hour of downtime for indexing. Use of the PCBN cutting tool significantly reduces the total cost per piece by eliminating 10 hours of downtime of the machine. Later in this chapter the economics of machining will be addressed again.

The two predominant wear modes of PCBN tools are notching at the *depth-of-cut line* (DCL) and *microchipping*. In some cases, the tool will exhibit flank wear of the cutting edge. These tools have been used successfully for heavy interrupted cutting and for milling white cast iron and hardened steels using negative lands and honed cutting edges. See Table 21-4 for suggested applications of CBN and diamonds along with carbides and ceramics.

TABLE 21-3 Cost Comparison for Machining Liner Bores in 1500 Engine Blocks[a]

	Ceramic TNG-433	PCBN BTNG-433
Cost per insert	$14.90	$208.00
Edges per insert	6	3
Cost per edge	$2.48	$69.33
Time per index (6 tools)	0.25 hr	0.25 hr
Cost per index at $45 per hour	$11.25	$11.25
Indexes per 1500 blocks	43	3
Indexing cost (indexes × $11.25)	$483.75	$33.75
Insert cost for 6 spindles	$638.34	$1248.00
Labor and tool cost	$1122.09	$1281.00
Cost per bore	$.125	$.142
Total number of tool changes	43	3
Downtime for 1500 blocks	× 0.25 hr 10.75 hr	× 0.25 hr 0.75 hr

[a] To see the economy of using PCBN cutting tools, it is important to consider all factors of the operation, especially downtime for tool changing.

TABLE 21-4 Application of Cutting Tool Materials to Workpiece Materials

	Applicable Tool Material			
Workpiece Material	Carbide-Coated Carbide	Ceramic, Cermet	Cubic Boron Nitride	Diamond Compacts
Cast irons, carbon steels	X	uninterrupted finishing cuts X		
Alloy steels, alloy cast iron	X	X	X	
Aluminum, brass	X	X		X
High-silicon aluminum	X			X
Nickel-based	X	X	X	
Titanium	X			
Plastic composites	X		X	

Since diamond and PCBN are extremely hard but brittle materials, new demands are being placed on the machine tools and on machining practice in order to take full advantage of the potential of these tool materials. These demands include:

- Use of more rigid machine tools and machining practices involving gentle entry and exit of the cut in order to prevent microchipping
- Use of high-precision machine tools, because these tools are capable of producing high finish and accuracy
- Use of machine tools with higher power, because these tools are capable of higher metal removal rates and faster spindle speeds

21.3 TOOL GEOMETRY

Figure 21-11 shows the cutting-tool geometry for a single-point tool (HSS) used in turning. The *back rake angle* affects the ability of the tool to shear the work material and form the chip. It can be positive or negative. Positive rake angles reduce the cutting forces, resulting in smaller deflections of the workpiece, tool holder, and machine. In machining hard work materials, the back rake angle must be small, even negative for carbide and diamond tools. Generally speaking, the higher the hardness of the workpiece, the smaller the back rake angle. For high-speed steels, back rake angle is normally chosen in the positive range, depending on the type of tool (turning, planing, end milling, face milling, drilling, etc.) and the work material.

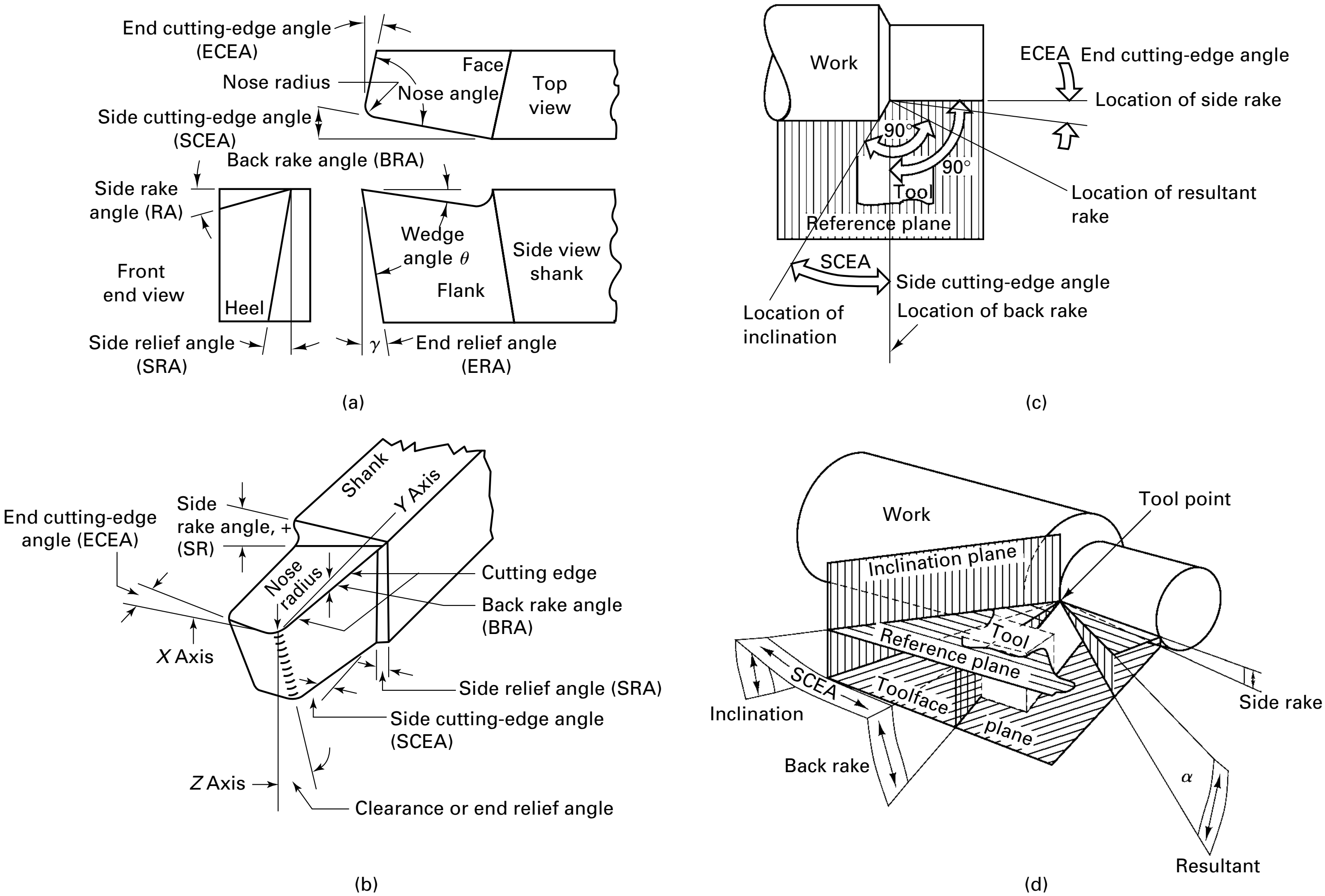

FIGURE 21-11 Standard terminology to describe the geometry of single-point tools: (a) three dimensional views of tool, (b) oblique view of tool from cutting edge, (c) top view of turning with single-point tool, (d) oblique view from shank end of single-point turning tool.

For carbide tools, inserts for different work materials and tool holders can be supplied with several standard values of back rake angle: $-6°$ to $+6°$. The side rake angle and the back rake angle combine to form the effective rake angle. This is also called the true rake angle or resultant rake angle of the tool.

True rake inclination of a cutting tool has a major effect in determining the amount of chip compression and the shear angle. A small rake angle causes high compression, tool forces, and friction, resulting in a thick, highly deformed, hot chip. Increased rake angle reduces the compression, the forces, and the friction, yielding a thinner, less deformed, and cooler chip. Unfortunately, it is difficult to take much advantage of the desirable effects of larger positive rake angles, since they are offset by the reduced strength of the cutting tool, due to the reduced tool section, and by its greatly reduced capacity to conduct heat away from the cutting edge.

To provide greater strength at the cutting edge and better heat conductivity, zero or negative rake angles are commonly employed on carbide, ceramic, polydiamond, and PCBN cutting tools. These materials tend to be brittle, but their ability to hold their superior hardness at high temperatures results in their selection for high-speed and continuous machining operations. While the negative rake angle increases tool forces, it keeps the tool in compression and provides added support to the cutting edge. This is particularly important in making intermittent cuts and in absorbing the impact during the initial engagement of the tool and work.

In general, the power consumption is reduced by approximately 1% for each 1° in alpha (α). The end relief angle is called gamma (γ). The wedge angle Θ determines the strength of the tool and its capacity to conduct heat and depends on the values of α and γ. The relief angles mainly affect the tool life and the surface quality of the workpiece. To reduce the deflections of the tool and the workpiece and to provide good surface quality, larger relief values are required. For high-speed steel, relief angles in the range of 5° to 10° are normal, with smaller values being for the harder work materials. For carbides, the relief angles are lower to give added strength to the tool.

The side and end cutting-edge angles define the nose angle and characterize the tool design. The nose radius has a major influence on surface finish. Increasing the nose radius usually decreases tool wear and improves surface finish.

Tool nomenclature varies with different cutting tools, manufacturers, and users. Many terms are still not standard because of all this variety. The most common tool terms will be used in later chapters to describe specific cutting tools.

The introduction of coated tools has spurred the development of improved tool geometries. Specifically, *low-force groove* (LFG) geometries have been developed that reduce the total energy consumed and break up the chips into shorter segments. These grooves effectively increase the rake angle, which increases the shear angle and lowers the cutting force and power. This means that higher cutting speeds or lower cutting temperatures (and better tool lives) are possible.

As a chip breaker, the groove deflects the chip at a sharp angle and causes it to break into short pieces that are easier to remove and are not as likely to become tangled in the machine and possibly cause injury to personnel. This is particularly important on high-speed, mass-production machines.

The shapes of cutting tools used for various operations and materials are compromises, resulting from experience and research so as to provide good overall performance. For coated tools, edge strength is an important consideration. A thin coat enables the edge to retain high strength, but a thicker coat exhibits better wear resistance. Normally, tools for turning have a coating thickness of 6 to 12 μm. Edge strength is higher for multilayer coated tools. The radius of the edge should be 0.0005 to 0.005 in.

■ 21.4 TOOL COATING PROCESSES

The two most effective coating processes for improving the life and performance of tools are the chemical vapor deposition and physical vapor deposition of titanium nitride (TiN) and titanium carbide (TiC). The selection of the *cutting materials for cutting* tools depends on what property you are seeking. If you want

Oxidation and corrosion resistance; high-temperature stability	select	Al_2O_3, TiN, TiC
Crater resistance,	select	Al_2O_3, TiN, TiC
Hardness and edge retention,	select	TiC, TiN, Al_2O_3
Abrasion resistance and flank wear,	select	Al_2O_3, TiN, TiC
Low coefficient of friction and high lubricity,	select	TiN, Al_2O_3, TiC
Fine grain size,	select	TiN, TiC, Al_2O_3

The CVD process, used to deposit a protective coating onto carbide inserts, has been benefiting the metal removal industry for many years and is now being applied with equal success to steel. The PVD processes have quickly become the preferred TiN coating processes for high-speed steel and carbide-tipped cutting tools.

CVD

Chemical vapor deposition is an atmosphere-controlled process carried out at temperatures in the range of 950° to 1050°C (1740° to 1920°F). Figure 21-12 shows a schematic of the CVD process.

Cleaned tools ready to be coated are staged on precoated graphite work trays (shelves) and loaded onto a central gas distribution column (tree). The tree loaded with parts to be coated is placed inside the retort of the CVD reactor. The tools are heated under an inert atmosphere until the coating temperature is reached. The coating cycle is initiated by the introduction of titanium tetrachloride ($TiCL_4$), hydrogen, and methane (CH_4) into the reactor. $TiCL_4$ is a vapor and is transported into the reactor via a hydrogen carrier gas; CH_4 is introduced directly. The chemical reaction for the formation of TiC is:

$$TiCl_4 + CH_4 \rightarrow TiC + 4HCl \tag{21-1}$$

To form titanium nitride, a nitrogen–hydrogen gas mixture is substituted for methane. The chemical reaction for TiN is:

$$2TiCl_4 + 2H_2 + N_2 \rightarrow 2TiN + 4HCl \tag{21-2}$$

PVD

The simplest form of PVD is evaporation, where the substrate is coated by condensation of a metal vapor. The vapor is formed from a source material called the charge, which is heated to a temperature less than 1000°C. PVD methods currently being used include reactive sputtering, reactive ion plating, low-voltage electron-beam evaporation, triode high-voltage electron-beam evaporation, cathodic evaporation, and arc evaporation. In each of the methods, the TiN coating is formed by reacting free titanium ions with nitrogen away from the surface of the tool and relying on a physical means to transport the coating onto the tool surface.

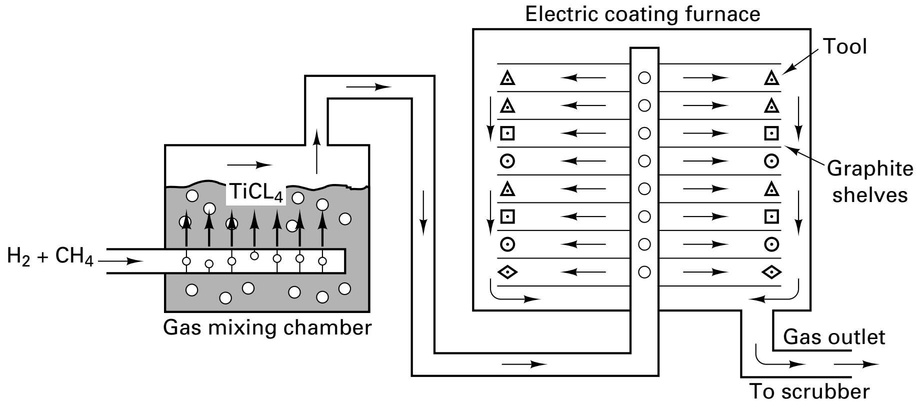

FIGURE 21-12 Chemical vapor deposition is used to apply layers (TiC, TiN, etc.) to carbide cutting tools.

All of these PVD processes share the following common features:

1. The coating takes place inside a vacuum chamber under a hard vacuum with the workpiece heated to 200° to 405°C (400 to 900°F).
2. Before coating, all parts are given a final cleaning inside the chamber to remove oxides and improve coating adhesion.
3. The coating temperature is relatively low (for cutting and forming tools), typically about 842° F (450° C).
4. The metal source is vaporized in an inert gas atmosphere (usually argon), and the metal atoms react with gas to form the coating. Nitrogen is the reactive gas for nitrides, and methane or acetylene (along with nitrogen) is used for carbides.
5. All four are ion-assisted deposition processes. The ion bombardment compresses the atoms on the growing film, yielding a dense, well-adhered coating.

A typical cycle time for the coating of functional tools, including heat-up and cool down, is about six hours.

Of the three, PVD arc evaporation, shown in Figure 21-13, is the most recent development. The plasma sources are from several arc evaporators located on the sides and top of the vacuum chamber. Each evaporator generates plasma from multiple arc spots. In this way a highly localized electrical arc discharge causes minute evaporation of the material of the cathode, and a self-sustaining arc is produced that generates a high-energy and concentrated plasma.

The kinetic energy of deposition is much greater than that found in any other PVD method. During coating, this energy is of the order of 150 electron volts and more. Therefore, the plasma is highly reactive and the greater percentage of the vapor is atomic and ionized.

Coating temperatures can be selected and controlled so that metallurgy is preserved. This enables a coating of a wide variety of sintered carbide tools, for example, brazed tools, solid carbide tools such as drills, end mills, form tools, and inserts. The PVD arc evaporation process will preserve substrate metallurgy, surface finish, edge sharpness, geometrical straightness, and dimensions.

CVD AND PVD—COMPLEMENTARY PROCESSES

CVD and PVD are complementary coating processes. The differences between the two processes and resultant coatings dictate which coating process to use on different tools.

Since CVD is done at higher temperatures, the adhesion of these coatings tends to be superior to a PVD–CVD-deposited coating. CVD coatings are normally deposited thicker than PVD coatings (6 to 9 μm for CVD, 1 to 3 μm for PVD). See Figure 21-14.

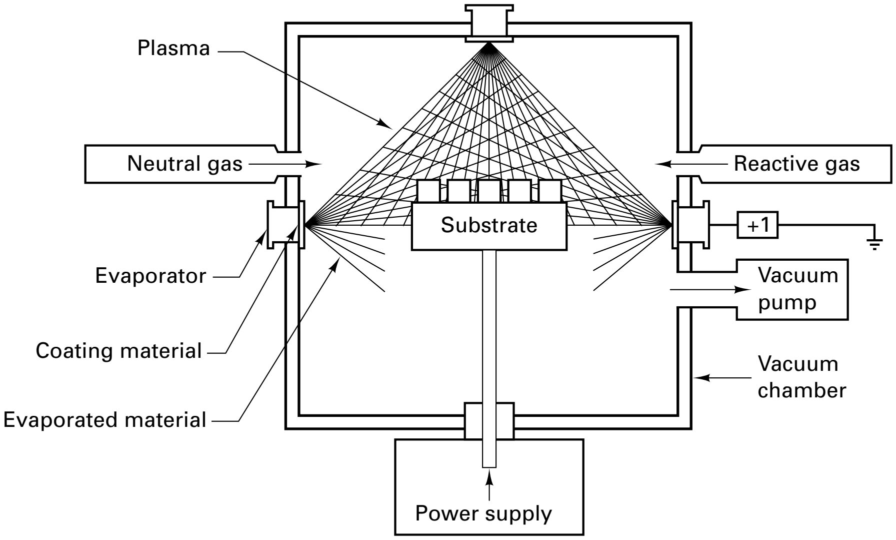

FIGURE 21-13 Schematic of PVC arc evaporation process.

Comparison of PVD Process Characteristics

Process	Processing Temperature, °C	Throwing Power	Coating Materials	Coating Applications and Special Features
Vacuum evaporation	RT—700, usually <200	Line-of-sight	Chiefly metal, especially Al (a few simple alloys/ a few simple compounds)	Electronic, optical, decorative, simple masking.
Ion implantation	200–400, best <250 for N	Line-of-sight	Usually N (B, C)	Wear resistance for tools, dies, etc. Effect much deeper than original implantation depth. Precise area treatment, excellent process control.
Ion plating, ARE	RT—0.7 T_m of coating. Best at elevated temperatures.	Moderate to good	Ion plating: Al, other metals (few alloys) ARE: TiN and other compounds	Electronic, optical, decorative. Corrosion and wear resistance. Dry lubricants. Thicker engineering coatings.
Sputtering	RT—0.7 T_m of metal coatings. Best >200 for nonmetals.	Line-of-sight	Metals, alloys, glasses, oxides. TiN, and other compounds	Electronic, optical, wear resistance. Architectural (decorative). Generally thin coatings. Excellent process control.
CVD	300–2000, usually 600–1200	Very good	Metals, especially refractory TiN and other compounds; pyrolytic BN	Thin, wear-resistant films on metal and carbide dies, tools, etc. Free-standing bodies or refractory metals and pyrolytic C or BN.

RT= room temperature; ARE = activated reactive evaporation; T_m = absolute melting temperature. (a) Compounds: oxides, nitrides, carbides, silicides, and borides of Al, B, Cr, Hf, Mo, Nb, Ni, Re, Si, Ta, Ti, V, W, Zr.

Source: Advanced Materials and Processes, December 2001.

FIGURE 21-14 Comparison of PVD methods for depositing thin films on microelectronic devices as well as cutting tools.

With CVD multiple coatings, layers may be readily deposited but the tooling materials are restricted. CVD coated tools must be heat treated after coating. This limits the application to loosely toleranced tools. However, the CVD process, being a gaseous process, results in a tool that is coated uniformly all over; this includes blind slots and blind holes.

Since PVD is mainly a line-of-sight process, all surfaces of the part to be coated may be masked. PVD also requires fixturing of each part in order to effect the substrate bias.

APPLICATIONS

Applications for the two different processes are as follows:

CVD

- Loosely toleranced tooling
- Piercing and blanking punches, trim dies, phillips punches, upsetting punches
- AISI A, D, H, M, and air hardening and tool steel parts
- Solid carbide tooling

PVD

- All HSS, solid carbide, and carbide-tipped cutting tools
- Fine blanking punches, dies (0.001 in. tolerance or less)
- Non-composition-dependent process; virtually all tooling materials, including mold steels and bronze

21.5 TOOL FAILURE AND TOOL LIFE

In metalcutting, the failure of the cutting tool can be classified into two broad categories, according to the failure mechanisms that caused the tool to die (or fail):

1. *Physical failures* mainly include gradual tool wear on the flank(s) of the tool below the cutting edge (called flank wear) or wear on the rake face of the tool (called *crater wear*) or both.
2. *Chemical failures*, which include wear on the rake face of the tool (called *crater wear)* are rapid, usually unpredictable, and often catastrophic failures resulting from abrupt, premature death of a tool.

Other modes of failure are outlined in Figure 21-15. The selection of failure criteria is also widely varied. Figure 21-15 also shows a sketch of a "worn" tool, showing *crater wear* and *flank wear*, along with wear of the tool nose radius and an outer-diameter groove (the DCL groove). Tools also fail by edge chipping and edge fracture.

As the tool wears, its geometry changes. This geometry change will influence the cutting forces, the power being consumed, the surface finish obtained, the dimensional accuracy, and even the dynamic stability of the process. Worn tools are duller, creating greater cutting forces and often resulting in chatter in processes that otherwise are usually relatively free of vibration. The actual wear mechanisms active in this high-temperature environment are abrasion, adhesion, diffusion, or chemical interactions. It appears that in metalcutting, any or all of these mechanisms may be operative at a given time in a given process.

Tool failure by plastic deformation, brittle fracture, fatigue fracture, or edge chipping can be unpredictable. Moreover, it is difficult to predict which mechanism will dominate and result in a tool failure in a particular situation. What can be said is that tools, like people, die (or fail) from a great variety of causes under widely varying conditions.

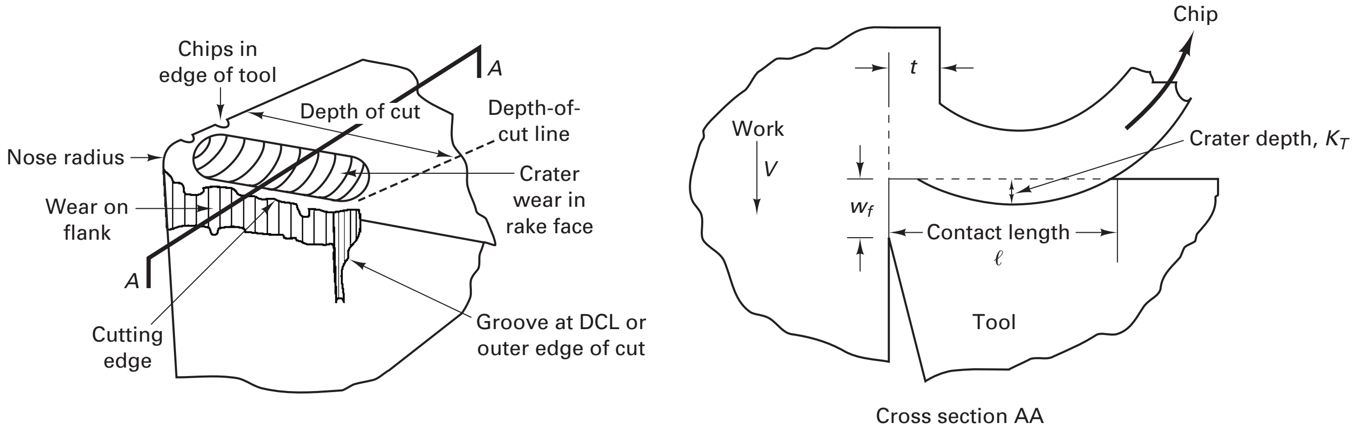

Cross section AA

	No.	Failure	Cause	
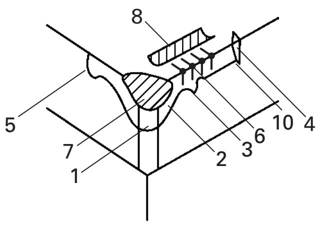	1-3	Flank wear	Physical	Due to the abrasive effect of hard grains contained in the work material
	4-5	Groove		Due to wear at the DCL or outer edge of the cut
	6	Chipping		Fine chips caused by high-pressure cutting, chatter, vibration, etc.
	7	Partial fracture		Due to the mechanical impact when an excessive force is applied to the cutting edge
	8	Crater wear	Chemical	Carbide particles are removed due to degradation of tool performances and chemical reactions at high temperature
	9	Deformation		The cutting edge is deformed due to its softening at high temperature
	10	Thermal crack		Thermal fatigue in the heating and cooling cycle with interrupted cutting
	1	Built-up edge		A portion of the workpiece material adheres to the insert cutting edge

FIGURE 21-15 Tools can fail in many ways. Tool wear during oblique cutting can occur on the flank or the rake face; t = uncut chip thickness; k_t = crater depth; w_f = flank wear land length; DCL = depth-of-cut line.

Therefore, tool life should be treated as a random variable, or probabilistically, not as a deterministic quantity.

21.6 FLANK WEAR

During machining, the tool is performing in a hostile environment in which high contact stresses and high temperatures are commonplace, and therefore tool wear is always an unavoidable consequence. At lower speeds and temperatures, the tool most commonly wears on the flank. Suppose that the tool wear experiment were to be repeated 15 times without changing any of the input parameters. The result would look like Figure 21-16, which depicts the variable nature of tool wear and shows why tool wear must be treated as a random variable. In Figure 21-16 the average time is denoted as μ_T and the standard deviation as σ_T, where the wear limit criterion was 0.025 in. At a given time during the test, 35 minutes, the tool displayed flank wear ranging from 0.013 to 0.021 in, with an average of $\mu_w = 0.00175$ in. with standard deviation σ_w 0.001 in.

In Figure 21-17 four characteristic tool wear curves (average values) are shown for four different cutting speeds, V_1 through V_4; V_1 is the fastest cutting speed and therefore

w_f values for general life determination (for cemented carbides)

Width of Wear in.	Applications
0.008	Finish cutting of nonferrous alloys, fine & light cut, etc.
0.016	Cutting of special steels
0.028	Normal cutting of cast irons, steels, etc.
0.040–0.050	Rough cutting of common cast irons

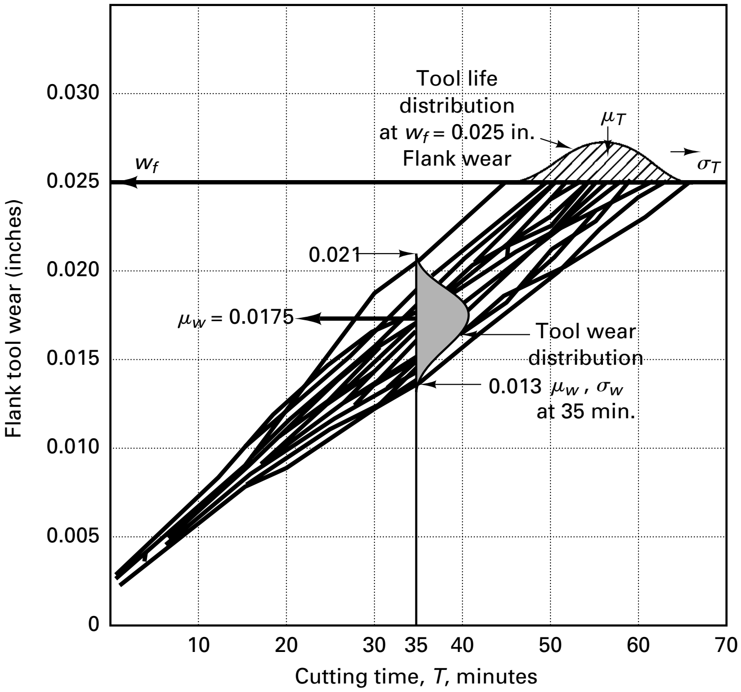

FIGURE 21-16 Tool wear on the flank displays a random nature, as does tool life. W_f = flank wear limit value.

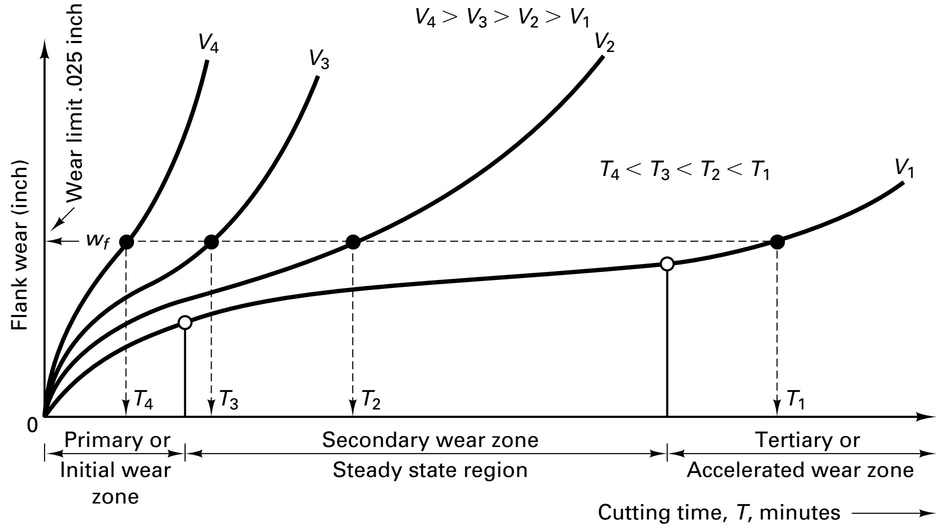

FIGURE 21-17 Typical tool wear curves for flank wear at different velocities. The initial wear is very fast, then it evens out to a more gradual pattern until the limit is reached; after that, the wear substantially increases.

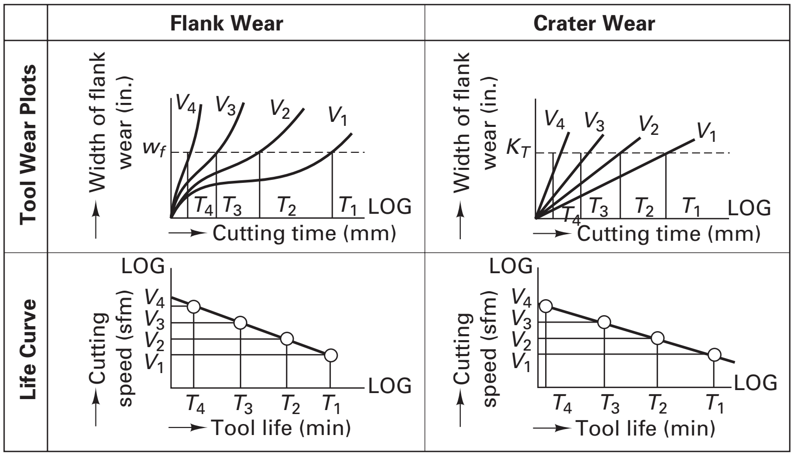

FIGURE 21-18 Construction of the Taylor tool life curve using data from deterministic tool wear plots like those of Figure 21-17. Curves like this can be developed for both flank and crater wear.

generates the fastest wear rates. Such curves often have three general regions, as shown in the figure. The central region is a steady-state region (or the region of secondary wear). This is the normal operating region for the tool. Such curves are typical for both flank wear and crater wear. When the amount of wear reaches the value w_f, the permissible tool wear on the flank, the tool is said to be "worn out." w_f is typically set at 0.025 to 0.030 in. for flank wear for high-speed steels and 0.008 to 0.050 for carbides, depending on the application. For crater wear, the depth of the crater is used to determine tool failure.

Using the empirical tool wear data shown in Figure 21-17, which used the values of T (time in minutes) associated with V (cutting speed) for a given amount of tool wear, w_f (see the dashed-line construction), Figure 21-18 was developed. When V and T are plotted on log-log scales, a linear relationship appears, described by the equation

$$VT^n = \text{constant} = C \tag{21-3}$$

This equation is called the Taylor tool life equation because in 1907, F. W. Taylor published his now-famous paper "On the Art of Cutting Metals" in ASME Transactions, wherein tool life *(T)* was related to cutting speed *(V)* and feed *(f)*. This equation had the form

$$T = \frac{\text{constant}}{f_x V_y} \tag{21-4}$$

which over the years took the more widely published form

$$VT^n = C^{\ddagger}$$

where n is an exponent that depends mostly on tool material but is affected by work material, cutting conditions, and environment and C is a constant that depends on all the input parameters, including feed. Table 21-5 provides some data on Taylor tool life constants.

Figure 21-19 shows typical tool life curves for one tool material and three work materials. Notice that all three plots have about the same slope, n. Typical values for n are 0.14 to 0.16 for HSS, 0.21 to 0.25 for uncoated carbides, 0.30 for TiC inserts, 0.33 for polydiamonds, 0.35 for TiN inserts, and 0.40 for ceramic-coated inserts.

It takes a great deal of experimental effort to obtain the constants for the Taylor equation, as each combination of tool and work material will have different constants. Note that for a tool life of 1 minute, $C = V$, or the cutting speed that yields about 1 minute of tool life for this tool.

A great deal of research has gone into developing more sophisticated versions of the Taylor equation, wherein constants for other input parameters (typically feed, depth of cut, and work material hardness) are experimentally determined, for example,

$$VT^nF^md^p = K' \tag{21-5}$$

[‡] Carl Barth, who was Taylor's mathematical genius, is generally thought to be the author of these formulations along with early versions of slide rules.

TABLE 21-5 Tool Life Information for Various Materials and Conditions

				Size of Cut (in.)			$VT^n = C$	
Source	Tool Material	Geometry	Workpiece Material	Depth	Feed	Cutting Fluid	n	C
1	High-carbon steel	8.14, 6.6, 6.15, 3/64	Yellow brass (.60 Cu, 40 Zn, 85 NI. .006 Pb)	.050	.0255	Dry	.081	242
				.100	.0127	Dry	.096	299
1	High-carbon steel	8.14, 6.6, 6.15, 3/64	Bronze (.9 Cu, .1.5n)	.050	.0255	Dry	.086	190
				.100	.0127	Dry	.111	232
1	HSS-18-4-1	8.14, 6.6, 6.15, 3/64	Cast Iron 160 Bhn	.050	.0255	Dry	.101	172
			Cast iron, Nickel, 164 Bhn	.050	.0255	Dry	.111	186
			Cast iron, NI-Cr, 207 Bhn	.050	.0255	Dry	.088	102
1	HSS-18-4-1	8.14, 6.6, 6.15, 3/64	Stell, SAE B1113 C.D.	.050	.0127	Dry	.080	260
			Stell, SAE B1112 C.D.	.050	.0127	Dry	.105	225
			Stell, SAE B1120 C.D.	.050	.0127	Dry	.100	270
			Stell, SAE B1120 + Pb C.D.	.050	.0127	Dry	.060	290
			Stell, SAE B1035 C.D.	.050	.0127	Dry	.110	130
			Stell, SAE B1035 + Pb C.D.	.050	.0127	Dry	.110	147
1	HSS-18-4-1	8.14, 6.6, 6.15, 3/64	Stell, SAE 1045 C.D.	.100	.0127	Dry	.110	192
		8.14, 6.6, 6.13, 3/66	Stell, SAE 2340 185 Bhn	.100	.0125	Dry	.147	143
		8.14, 6.6, 6.15, 3/64	Stell, SAE 2345 198 Bhn	.050	.0255	Dry	.105	126
		8.14, 6.6, 6.15, 3/64	Stell, SAE 3140 190 Bhn	.100	.0125	Dry	.160	178
1	HSS-18-4-1	8.14, 6.6, 6.15, 3/64	Stell, SAE 4350 363 Bhn	.0125	.0127	Dry	.080	181
			Stell, SAE 4350 363 Bhn	.0125	.0255	Dry	.125	146
			Stell, SAE 4350 363 Bhn	.0250	.0255	Dry	.125	95
			Stell, SAE 4350 363 Bhn	.100	.0127	Dry	.110	78
			Stell, SAE 4350 363 Bhn	.100	.0255	Dry	.110	46
1	HSS-18-4-1	8.14, 6.6, 6.15, 3/64	Stell, SAE 4140 230 Bhn	.050	.0127	Dry	.180	190
			Stell, SAE 4140 271 Bhn	.050	.0127	Dry	.180	159
			Stell, SAE 6140 240 Bhn	.050	.0127	Dry	.150	197
1	HSS-18-4-1	8.22, 6.6, 6.15, 3/64	Monel metal 215 Bhn	.100	.0127	Dry	.080	170
				.150	.0255	Dry	.074	127
				.100	.0127	Em	.080	185
				.100	.0127	SMO	.105	189
1	Stellite 2400	0.0, 6.6, 6.0, 3/32	Steel, SAE 3240 annealed	.187	.031	Dry	.190	215
				.125	.031	Dry	.190	240
				.062	.031	Dry	.190	270
				.031	.031	Dry	.190	310
1	Stellite No. 3	0.0, 6.6, 6.0, 3/32	Cast iron 200 Bhn	.062	0.31	Dry	.150	205
1	Carbide (T 64)	6.12, 5.5, 10.45	Steel, SAE 1040 annealed	.062	.025	Dry	.156	800
			Steel, SAE 1060 annealed	.125	.025	Dry	.167	660
			Steel, SAE 1060 annealed	.187	.025	Dry	.167	615
			Steel, SAE 1060 annealed	.250	.025	Dry	.167	560
			Steel, SAE 1060 annealed	.062	.021	Dry	.167	880
			Steel, SAE 1060 annealed	.062	.042	Dry	.164	510
			Steel, SAE 1060 annealed	.062	.062	Dry	.162	400
			Steel, SAE 2340 annealed	.062	.025	Dry	.162	630
2	Ceramic	not available	AISI 4150	.160	.016	Dry	.400	2000
			AISI 4150	.160	.016	Dry	.200	620

Sources: 1- *Fundamentals of Tool Design*. ASTME. A.R. Koneeny, W. J. Potthoff   2 - *Theory of Metal Cutting*, P.N. Black

where n, m, and p are exponents and K' is a constant. Equations of this form are also deterministic and determined empirically.

The problem has been approached probabilistically in the following way. Since T depends on speed, feed, materials, and so on, one writes

$$T = \frac{K^{l/n}}{V^{l/n}} = \frac{K}{V^m} \tag{21-6}$$

where K is now a random variable that represents the effects of all unmeasured factors and is an input variable.

The sources of tool life variability include factors such as:

1. Variation in work material hardness (from part to part and within a part)
2. Variability in cutting-tool materials, geometry, and preparation
3. Vibrations in machine tool, including rigidity of work and tool-holding devices
4. Changing surface characteristics of workpieces

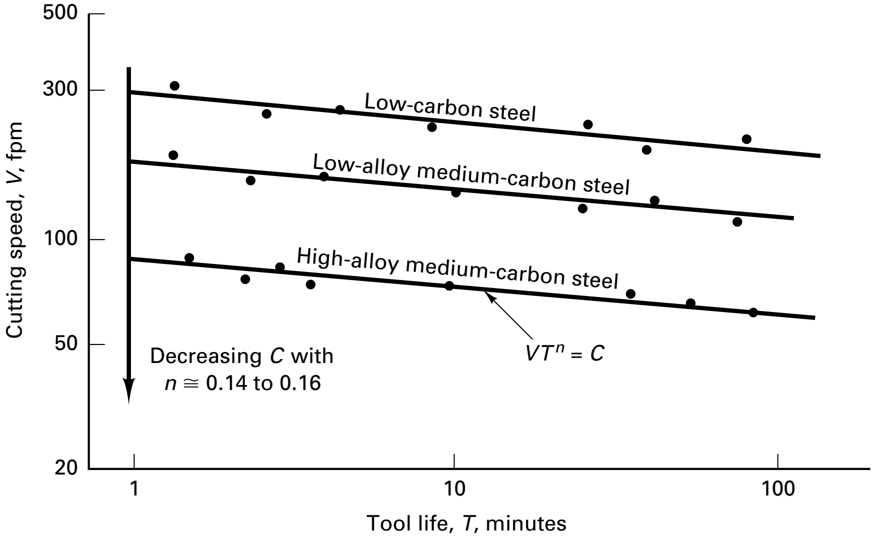

FIGURE 21-19 Log-log tool life plots for three steel work materials cut with HSS tool material.

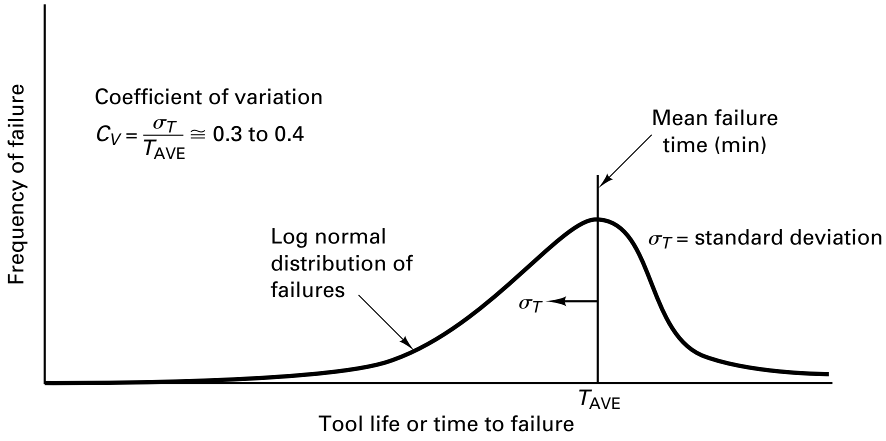

FIGURE 21-20 Tool life viewed as a random variable has a log normal distribution with a large coefficient of variation.

The examination of the data from a large number of tool life studies in which a variety of steels were machined shows that regardless of the tool material or process, tool life distributions are usually log normal and typically have a large standard deviation. As shown in Figure 21-20, tool life distributions have a large coefficient of variation, so tool life is not very predictable.

Other criteria that can be used to define tool death in addition to wear limits are:

- When surface finish deteriorates unacceptably
- When workpiece dimension is out of tolerance
- When power consumption or cutting forces increase to a limit
- Sparking or chip discoloration and disfigurement
- Cutting time or component quantity

In automated processes, it is very beneficial to be able to monitor the tool wear online so that the tool can be replaced prior to failure, wherein defective products may also result. The feed force has been shown to be a good, indirect measure of tool wear. That is, as the tool wears and dulls, the feed force increases more than the cutting force increases.

Once criteria for failure have been established, tool life is that time elapsed between start and finish of the cut, in minutes. Other ways to express tool life, other than time, include:

1. Volume of metal removed between regrinds or replacement of tool
2. Number of pieces machined per tool
3. Number of holes drilled with a given tool

Drilling tool failure is discussed more in chapter 23 and is very complex because of the varied and complex geometry of the tools and as shown here in Figure 21-21, the tool material.

RECONDITIONING CUTTING TOOLS

In the reconditioning of tools by sharpening and recoating, care must be taken in grinding the tool's surfaces. The following guidelines should be observed:

1. Resharpen to original tool geometry specifications.Restoring the original tool geometry will help the tool achieve consistent results on subsequent uses. Computer numerical control (CNC) grinding machines for tool resharpening have made it easier to restore a tool's original geometry.
2. Grind cutting edges and surfaces to a fine finish. Rough finishes left by poor and abusive regrinding hinder the performance of resharpened tools. For coated tools, tops of ridges left by rough grinding will break away in early tool use, leaving uncoated and unprotected surfaces that will cause premature tool failure.
3. Remove all burrs on resharpened cutting edges. If a tool with a burr is coated, premature failure can occur because the burr will break away in the first cut, leaving an uncoated surface exposed to wear.
4. Avoid resharpening practices that overheat and burn or melt (called *glazed over*) the tool surfaces, as this will cause problems in coating adhesion. Polishing or wire brushing of tools causes similar problems.

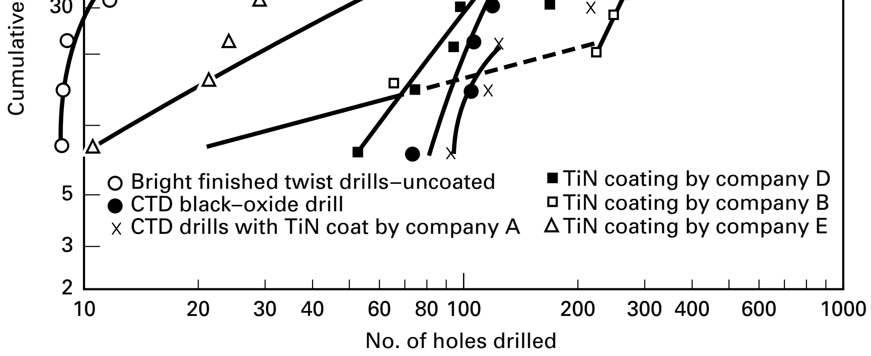

Drill performance based on the number of holes drilled with 1/4-in.-diameter drills in T–1 structural steel.

FIGURE 21-21 Tool life test data for various coated drills. TiN-coated HSS drills outperform uncoated drills. Life based on the number of holes drilled before drill failure.

The cost of each recoating is about one-fifth the cost of purchasing a new tool. By recoating, the tooling cost per workpiece can be cut by between 20 and 30%, depending on the number of parts being machined.

21.7 ECONOMICS OF MACHINING

The cutting speed has such a great influence on the tool life compared to the feed or the depth of cut that it greatly influences the overall economics of the machining process. For a given combination of work material and tool material, a 50% increase in speed results in a 90% decrease in tool life, while a 50% increase in feed results in a 60% decrease in tool life. A 50% increase in depth of cut produces only a 15% decrease in tool life. Therefore, in limited-horsepower situations, depth of cut and then feed should be maximized while speed is held constant and horsepower consumed is maintained within limits. As cutting speed is increased, the machining time decreases but the tools wear out faster and must be changed more often. In terms of costs, the situation is as shown in Figure 21-22, which shows the effect of cutting speed on the cost per piece.

The total cost per operation is comprised of four individual costs: machining costs, tool costs, tool-changing costs, and handling costs. The machining cost is observed to decrease with increasing cutting speed because the cutting time decreases. Cutting time is proportional to the machining costs. Both the tool costs and the tool-changing costs increase with increases in cutting speeds. The handling costs are independent of cutting speed. Adding up each of the individual costs results in a total unit cost curve that is observed to go through a minimum point. For a turning operation, the total cost per piece C equals

$$C = C_1 + C_2 + C_3 + C_4 \tag{21-7}$$

$= \text{Machining cost} + \text{tooling cost} + \text{tool-changing cost} + \text{handling cost per piece}$

Expressing each of these cost terms as a function of cutting velocity will permit the summation of all the costs.

$C_1 = T_m \times C_o$ where C_o = operating cost ($/min)
T_m = cutting time (min/piece)

$C_2 = \left(\frac{T_m}{T}\right)C_t$ where T = tool life (min/tool)
C_t = initial cost of tool ($)

$C_3 = t_c \times C_o\left(\frac{T_m}{T}\right)$ where t_c = time to change tool (min)
$\frac{T_m}{T}$ = number of tool changes per piece

C_4 labor, overhead, and machine tool costs consumed while part is being loaded or unloaded, tools are being advanced, machine has broken down, and so on.

Since $T_m = L/Nf_r$ for turning
$= \pi DL/12Vf_r$
and $T = (K/V)^{1/n}$, by rewriting equation 21-3,

and using "K" for the constant "C", the cost per unit, C, can be expressed in terms of V:

$$C = \frac{L\pi DC_o}{12Vf_r} + \frac{C_tV^{1/n}}{K^{1/n}} + \frac{t_cC_oV^{1/n}}{K^{1/n}} + C_4 \tag{21-8}$$

To find the minimum, take $dc/dV = 0$ and solve for V:

$$V_m = \left[\frac{1}{n} - 1\right]\left[\frac{C_t + (C_o \times t_c)}{C_o}\right] \tag{21-9}$$

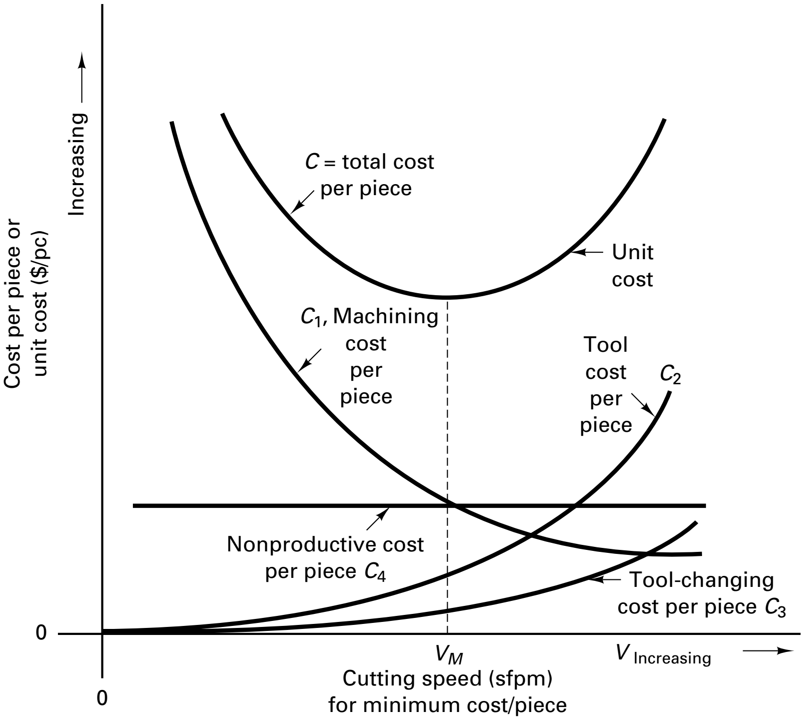

FIGURE 21-22 Cost per unit for a machining process versus cutting speed. Note that the "C" in this figure and related equations is not the same "C" used in the Taylor tool life (equation 21-3).

So V_m represents a cutting speed that will minimize the cost per unit, as depicted in Figure 21-22. However, a word of caution here is appropriate. Note that this derivation was totally dependent upon the Taylor tool life equation. Such data may not be available because they are expensive and time consuming to obtain. Even when the tool life data are available, this procedure assumes that the tool fails only by whichever wear mechanism (flank or crater) was described by this equation and by no other failure mechanism. Recall that tool life has a very large coefficient of variation and is probabilistic in nature. This derivation assumes that for a given *V*, there is one *T*—and this simply is not the case, as was shown in Figure 21-16. The model also assumes that the workpiece material is homogeneous, the tool geometry is preselected, the depth of cut and feed rate are known and remain unchanged during the entire process, sufficient horsepower is available for the cut at the economic cutting conditions, and the cost of operating time is the same whether the machine is cutting or not cutting.

Another example of tooling economics is summarized in Table 21-6, where a comparison is made between four different tools, all used for turning hot-rolled 8620 steel with triangular inserts. Operating costs for the machine tool are $60 per hour. The low-force groove insert has only three cutting edges available instead of six. It takes 3 minutes to change inserts and half a minute to unload a finished part and load in a new 6-in.-diameter bar stock. The length of cut is about 24 in. The student should study and analyze this table carefully so that each line is understood. Note that the cutting-tool cost per piece is three times higher for the low-force groove tool over the carbide but really of no consequence, since the major cost per piece comes from two sources: the machining cost per piece and the nonproductive cost per piece.

MACHINABILITY

Machinability is a much maligned term that has many different meanings but generally refers to the ease with which a metal can be machined to an acceptable surface finish. The principal definitions of the term are entirely different, the first based on material properties, the second based on tool life, and the third based on cutting speed.

1. Machinability is defined by the ease or difficulty with which the metal can be machined. In this light, specific energy, specific horsepower, and shear stress are used as

TABLE 21-6 Cost Comparison of Four Tool Materials, Based on Equal Tool Life of 40 Pieces per Cutting Edge

	Uncoated	TiC-Coated	$A1_2O_3$-Coated	$A1_2O_3$LFG
Cutting speed (surface ft/min)	400	640	1100	1320
Feed (in./rev)	0.020	0.022	0.024	0.028
Cutting edges available per insert	6	6	6	3
Cost of an insert ($/insert)	4.80	5.52	6.72	6.72
Tool life (pieces/cutting edge)	192	108	60	40
Tool-change time per piece (min)	0.075	0.075	0.075	0.075
Nonproductive cost per piece ($/pc)	0.50	0.50	0.50	0.50
Machining time per piece (min/pc)	4.8	2.7	1.50	1.00
Machining cost per piece ($/unit)	4.8	2.7	1.5	1.00
Tool-change cost per piece ($/pc)	0.08	0.08	0.08	0.08
Cutting-tool cost per piece ($/pc)	0.02	0.02	0.03	0.06
Total cost per piece ($/pc)	5.40	3.30	2.11	1.64
Production rate (pieces/hr)	11	18	29	38
Improvement in productivity based on pieces/hr (%)	0	64	164	245

Source: Data from T. E. Hale et al., "High Productivity Approaches to Metal Removal," *Materials Technology*, Spring 1980, p. 25.

measures, and, in general, the larger the shear stress or specific power values, the more difficult the material is to machine, requiring greater forces and lower speeds. In this definition, the material is the key.

2. Machinability is defined by the relative cutting speed for a given tool life while cutting some material, compared to a standard material cut with the same tool material. As shown in Figure 21-23, tool life curves are used to develop machinability ratings. In steels, the material chosen for the standard material was B1112 steel, which has a tool life of 60 min at a cutting speed of 100 sfpm. Material X has a 70% rating, which implies that steel X has a cutting speed of 70% of B1112 for equal tool life. Note that this definition assumes that the tool fails when machining X by whatever mechanism dominated the tool failure when machining the B1112. There is no guarantee that this will be the case. ISO standard 3685 has machinability index numbers based on 30 min of tool life with flank wear of 0.33 mm.
3. Cutting speed is measured by the maximum speed at which a tool can provide satisfactory performance for a specified time under specified conditions. See ASTM standard E 618-81: "Evaluating machining performance of ferrous metals using an automatic screw bar machine."
4. Other definitions of machinability are based on the ease of removal of the chips (chip disposal), the quality of the surface finish of the part itself, the dimensional stability of the process, or the cost to remove a given volume of metal.

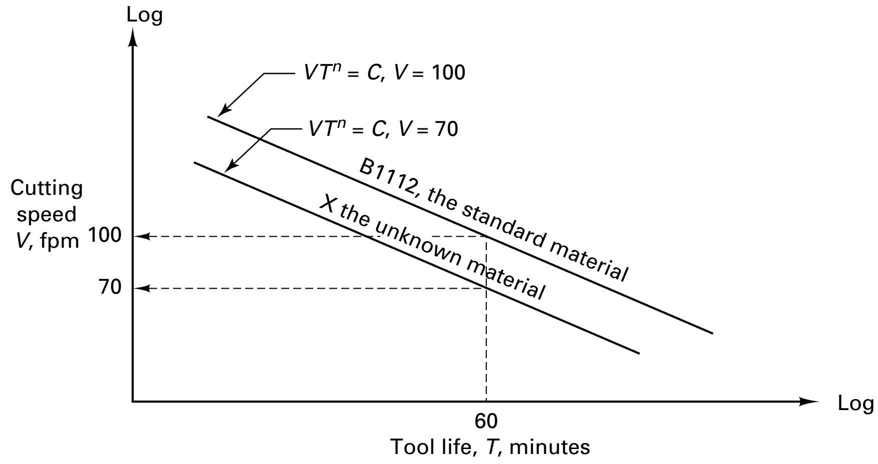

FIGURE 21-23 Machinability ratings defined by deterministic tool life curves.

Further definitions are being developed based on the probabilistic nature of the tool failure, in which machinability is defined by a tool reliability index. Using such indexes, various tool replacement strategies can be examined and optimum cutting rates obtained. These approaches account for the tool life variability by developing coefficients of variation for common combinations of cutting tools and work materials.

The results to date are very promising. One thing is clear, however, from this sort of research: although many manufacturers of tools have worked at developing materials that have greater tool life at higher speeds, few have worked to develop tools that have less variability in tool life at all speeds. The reduction in variability is fundamental to achieving smaller coefficients of variation, which typically are of the order of 0.3 to 0.4. This means that a tool with a 100-min average tool life has a standard deviation of 30 to 40 min, so there is a good probability that the tool will fail early. In automated equipment, where early, unpredicted tool failures are extremely costly, reduction of the tool life variability will pay great benefits in improved productivity and reduced costs.

■ 21.8 CUTTING FLUIDS

From the day that Frederick W. Taylor demonstrated that a heavy stream of water flowing directly on the cutting process allowed the cutting speeds to be doubled or tripled, *cutting fluids* have flourished in use and variety and have been employed in virtually every machining process. The cutting fluid acts primarily as a coolant and secondly as a lubricant, reducing the friction effects at the tool–chip interface and the work flank regions. The cutting fluids also carry away the chips and provide friction (and force) reductions in regions where the bodies of the tools rub against the workpiece. Thus in processes such as drilling, sawing, tapping, and reaming, portions of the tool apart from the cutting edges come in contact with the work, and these (sliding friction) contacts greatly increase the power needed to perform the process, unless properly lubricated.

The reduction in temperature greatly aids in retaining the hardness of the tool, thereby extending the tool life or permitting increased cutting speed with equal tool life. In addition, the removal of heat from the cutting zone reduces thermal distortion of the work and permits better dimensional control. Coolant effectiveness is closely related to the thermal capacity and conductivity of the fluid used. Water is very effective in this respect but presents a rust hazard to both the work and tools and also is ineffective as a lubricant. Oils offer less effective coolant capacity but do not cause rust and have some lubricant value. In practice, straight cutting oils or emulsion combinations of oil and water or wax and water are frequently used. Various chemicals can also be added to serve as wetting agents or detergents, rust inhibitors, or polarizing agents to promote formation of a protective oil film on the work. The extent to which the flow of a cutting fluid washes the very hot chips away from the cutting area is an important factor in heat removal. Thus the application of a coolant should be copious and of some velocity.

The possibility of a cutting fluid providing lubrication between the chip and the tool face is an attractive one. An effective lubricant can modify the process, perhaps producing a cooler chip, discouraging the formation of a built-up edge on the tool, and promoting improved surface finish. However, the extreme pressure at the tool–chip interface and the rapid movement of the chip away from the cutting edge make it virtually impossible to maintain a conventional hydrodynamic lubricating film at the tool–chip interface. Consequently, any lubrication action is associated primarily with the formation of solid chemical compounds of low shear strength on the freshly cut chip face, thereby reducing chip–tool shear forces or friction. For example, carbon tetrachloride is very effective in reducing friction in machining several different metals and yet would hardly be classified as a good lubricant in the usual sense. Chemically active compounds, such as chlorinated or sulfurized oils, can be added to cutting fluids to achieve such a lubrication effect. Extreme-pressure lubricants are especially valuable in severe operations, such as internal threading (tapping), where the extensive tool–work contact results in high friction with limited access for a fluid. In addition to functional effectiveness as coolant and lubricant, cutting fluids should be stable in use and storage, noncorrosive to

TABLE 21-7 Cutting Fluid Contaminants

Category	Contaminants	Effects
Solids	Metallic fines, chips Grease and sludge Debris and trash	Scratch product's surface Plug coolant lines Produce wear on tools and machines
Tramp fluids	Hydraulic oils (coolant) Water (oils)	Decrease cooling efficiency Cause smoking Clog paper filters Grow bacteria faster
Biologicals (coolants)	Bacteria Fungi Mold	Acidity coolant Break down emulsions Cause rancidity, dermatitis Require toxic biocides

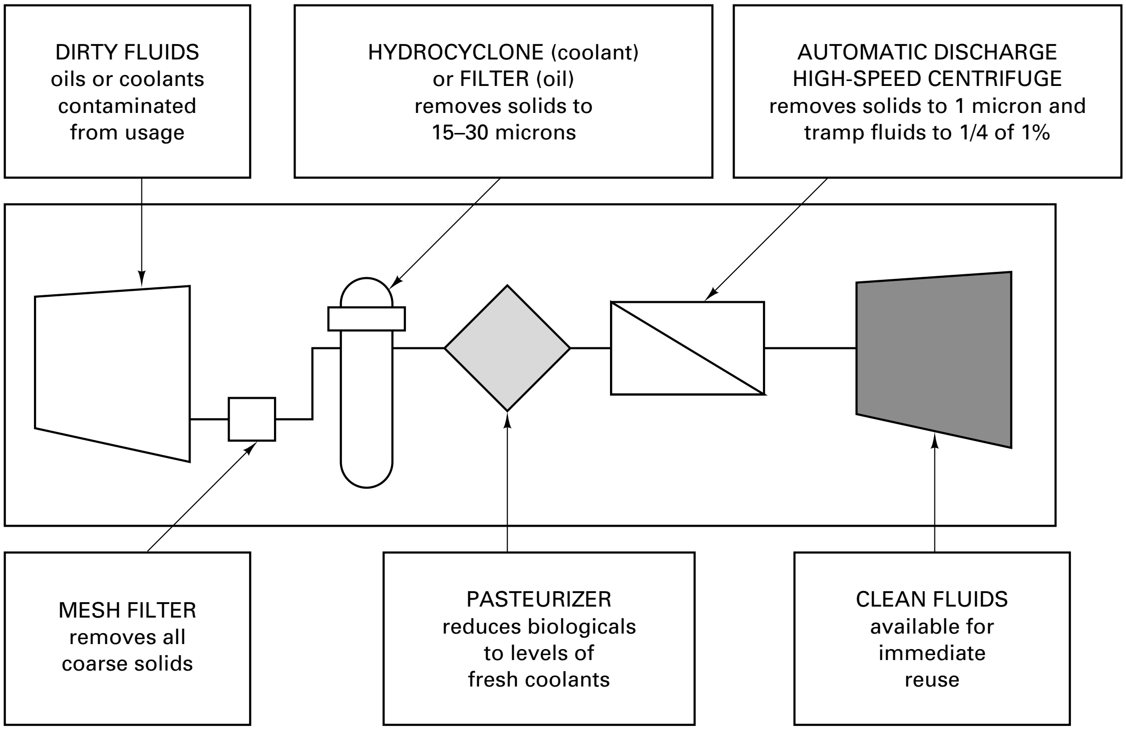

FIGURE 21-24 A well-designed recycling system for coolants will return more than 99% of the fluid for reuse.

work and machines, and nontoxic to operating personnel. The cutting fluid should also be restorable by using a closed recycling system that will purify the used coolant and cutting oils. Cutting fluids become contaminated in three ways (Table 21-7.) All these contaminants can be eliminated by filtering, hydrocycloning, pasteurizing, and centrifuging. Coolant restoration eliminates 99% of the cost of disposal and 80% or more of new fluid purchases. See Figure 21-24 for a schematic of a coolant recycling system.

■ Key Words

aluminum oxide
BUE (built-up edge)
carbides
cast cobalt alloy
ceramics
cermets
chemical vapor deposition
coated tools
crater wear
cubic boron nitride (CBN)
cutting fluids
cutting tool materials
DCL (depth-of-cut line)
diamonds
flank wear
hardness
hot hardness
HSS (high-speed steel)
machinability
metal cutting
physical vapor deposition
powder metallurgy
sintered carbides
stellite
tool life
titanium nitride
wear land

Review Questions

1. For metalcutting tools, what is the most important material property (i.e., the most critical characteristic)? Why?
2. What is hot hardness compared to hardness?
3. What is impact strength and how is it measured?
4. Why is impact strength an important property in cutting tools?
5. What is HIP, and how is it used for tool fabrication?
6. What are the primary considerations in tool selection?
7. What is the general strategy behind coated tools?
8. What is a cermet?
9. How is a CBN tool manufactured?
10. F. W. Taylor was one of the discoverers of high-speed steel. What else is he well known for?
11. What casting process do you think was used to fabricate cast cobalt alloys?
12. Discuss the constraints in the selection of a cutting tool.
13. What does *cemented* mean in the manufacture of carbides?
14. What advantage do ground carbide inserts have over pressed carbide inserts?
15. What is a chip groove?
16. What is the DCL?
17. Suppose you made four beams out of carbide, HSS, ceramic, and cobalt. The beams are identical in size and shape, differing only in material. Which beam would do each of the following?
    a. Deflect the most, assuming the same load
    b. Resist penetration the most
    c. Bend the farthest without breaking
    d. Support the greatest compressive load
18. Multiple coats or layers are put on the carbide base for what different purposes?
19. What are the various ways a cutting tool can fail and what can be done to remedy this? See Figures 21-A and 21-15.

	Failure		Basic Remedy
Edge Failure	Excessive flank wear 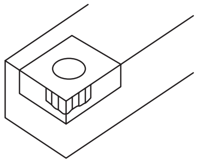	Tool material Cutting conditions	• Use a more wear-resistant grade $\text{carbide} \longrightarrow \begin{cases}\text{coated}\\ \text{cermet}\end{cases}$ • Decrease speed
	Excessive crater wear 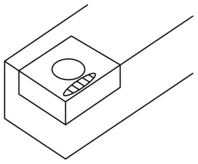	Tool material Tool design Cutting conditions	• Use a more wear-resistant grade $\text{carbide} \longrightarrow \begin{cases}\text{coated}\\ \text{cermet}\end{cases}$ • Enlarge the rake angle • Select the correct chip breaker • Decrease speed • Reduce the depth of cut and feed
	Cutting-edge chipping 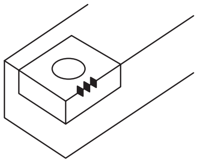	Tool material Tool design Cutting conditions	• Use tougher grades If carbide, (AC2000 → AC3000) • If built-up edge occurs, change to a less susceptible grade (cermet) • Reinforce the cutting edge (honing) • Reduce the rake angle • Increase speed (if caused by edge build-up)
	Partial fracture of cutting edges 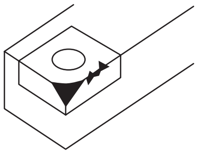	Tool material Tool design Cutting conditions	• Use tougher grades if carbide, (AC2000 → AC3000) • Use holder with a large approach angle • Use larger shank-size holder • Reduce the depth of cut and feed
	Built-up edge	Tool material Cutting conditions	• Change to a grade that is adhesion resistant • Increase the cutting speed and feed • Use cutting fluids
	Plastic deformation	Tool material Cutting conditions	• Change to highly thermal-resistant grades • Reduce the cutting speed and feed

FIGURE 21-A

20. What makes the process that makes TiC coatings for tools a problem? See equation 21-1.
21. Why does a TiN-coated tool consume less power than an uncoated HSS under exactly the same cutting conditions?
22. For what work material are CBN tools more commonly used and why?
23. Why is CBN better for machining steel than diamond?
24. What is the typical coefficient of variation for tool life data, and why is this a problem?
25. What is meant by the statement "Tool life is a random variable"?
26. The typical value of a coefficient of variation in metalcutting tool life distributions is 0.3. How could it be reduced?
27. Machinability is defined in many ways. Explain how a rating is obtained.
28. What are the chief functions of cutting fluids?
29. How are CVD tools manufactured?
30. Why is the PVD process used to coat HSS tools?
31. Why is there no universal cutting-tool material?
32. What is an 18-4-1 HSS composed of?
33. Over the years, tool materials have been developed that have allowed significant increases in MRR. Nevertheless, HSS is still widely used. Under what conditions might HSS be the material of choice?
34. Why is the rigidity of the machine tool an important consideration in the selection of the cutting-tool material?
35. Explain how it can be that the tool wears when it may be four times as hard as the work material.
36. What is a honed edge on a cutting tool and why is it done?

■ Problems

1. Figure 21-B gives data for cutting speed and tool life. Determine the constants for the Taylor tool life equation for these data. What do you think the tool material might have been?

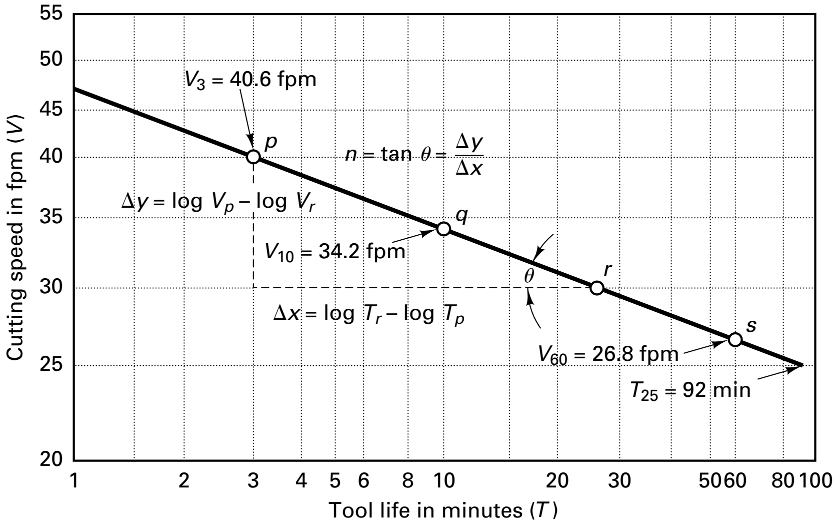

FIGURE 21-B

2. Suppose you have a turning operation using a tool with a zero back rake and 5° end relief. The insert flank has a wear land on it of 0.020 in. How much has the diameter of the workpiece grown (increased) due to this flank wear, assuming the tool has not been reset to compensate for the flank wear?

3. In Figure 21-C, a single-point tool is shown. Identify points *A* through *G* using tool nomenclature.

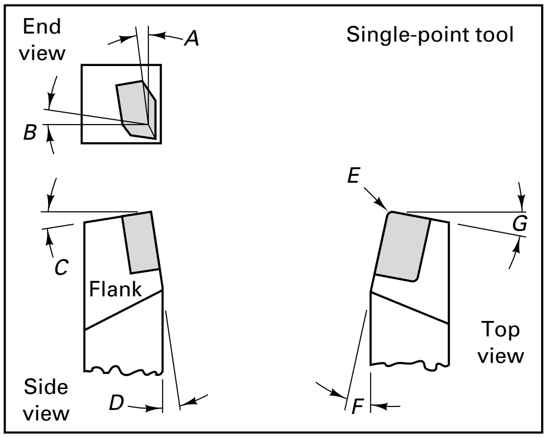

A = ____________________
B = ____________________
C = ____________________
D = ____________________
E = ____________________
F = ____________________
G = ____________________

FIGURE 21-C

4. The following data have been obtained for machining an Si-Al alloy.

Workpiece	Tool	Cutting Speed (m/min) for Tool Life (m/min) of		
Material	Material	20 min	30 min	60 min
Sand casting	Diamond polycrystal	731	642	514
Permanent-mold casting	Diamond polycrystal	591	517	411
PMC with flood cooling	Diamond polycrystal	608	554	472
Sand casting	WC-K-20	175	161	139

Compute the *C* and *n* values for the Taylor tool life equation.
How do these *n* values compare to the typical values?

5. In Figure 21-D, the insert at the top is set with a 0° side cutting-edge angle. The insert at the bottom is set so that the edge contact length is increased from a 0.250-in. depth of cut to 0.289 in. The feed was 0.010 ipr.
   a. Determine the side cutting-edge angle for the offset tool.
   b. What is the uncut chip thickness in the offset position?
   c. What effect will this have on the forces and the process?

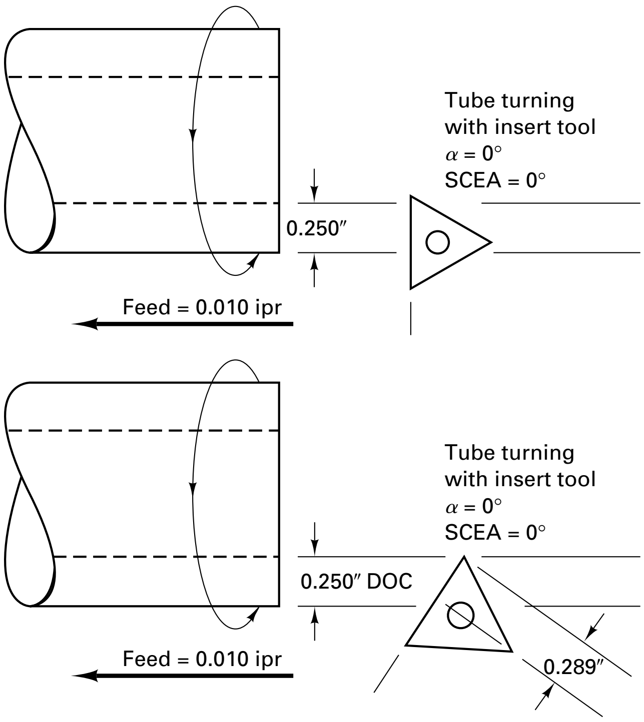

FIGURE 21-D

6. Tool cost is often used as the major criterion for justifying tool selection. Either silicon nitride or PCBN insert tips can be used to machine (bore) a cylinder block on a transfer line at a rate of 312,000 parts/yr (material: gray cast iron). The operation requires 12 inserts (2 per tool), as six bores are machined simultaneously. The machine was run at 2600 sfpm with a feed of 0.014 in. at 0.005-in. DOC for finishing. Here are some additional data.

	SiN	PCBN
Tips in use per part	12	12
Tool life (parts per tool)	200	4700
Cost per tip	$1.25	$28.50

   a. Which tool material would you recommend?
   b. On what basis?

7. A 2-in.-diameter bar of steel was turned at 284 rpm, and tool failure occurred in 10 min. The speed was changed to 132 rpm, and the tool failed in 30 min of cutting. Assume that a straight-line relationship exists. What cutting speed should be used to obtain a 60-min tool life of V_{60}?
8. Table 21-6 shows a cost comparison for four tool materials. Show how the data in this table were generated.
9. Refer to Problem 1. Show the relationship between cutting speed and tool temperature. What does this mean with regard to tool failure?
10. The outside diameter of a roll for a steel (AISI 1015) rolling mill is to be turned. In the final pass, the starting diameter = 26.25 in. and the length = 48.0 in. The cutting conditions will be feed = 0.0100 in./rev and depth of cut = 0.125 in. A cemented carbide cutting tool is to be used, and the parameters of the Taylor tool life equation for this setup are $n = 0.25$ and $C = 1300$. It is desirable to operate at a cutting speed such that

the tool will not need to be changed during the cut. Determine the cutting speed that will make the tool life equal to the time required to complete this turning operation. (Problem suggested by Groover, *Fundamentals of Modern Manufacturing: Materials, Processes, and Systems*, 2nd ed., John Wiley & Sons, 2002.)

11. Using data from Problems 8 and 10, determine the necessary horsepower for the machine tool to make this cut.
12. Figure 21-E shows a sketch of a single-point tool and its associated tool signature. Put the signature from the tool in Figure 21-C in the same order as shown in Figure 21-E. Which tool would produce the larger F_c given that both are cutting at the same V, f_r, and DOC in the same material?

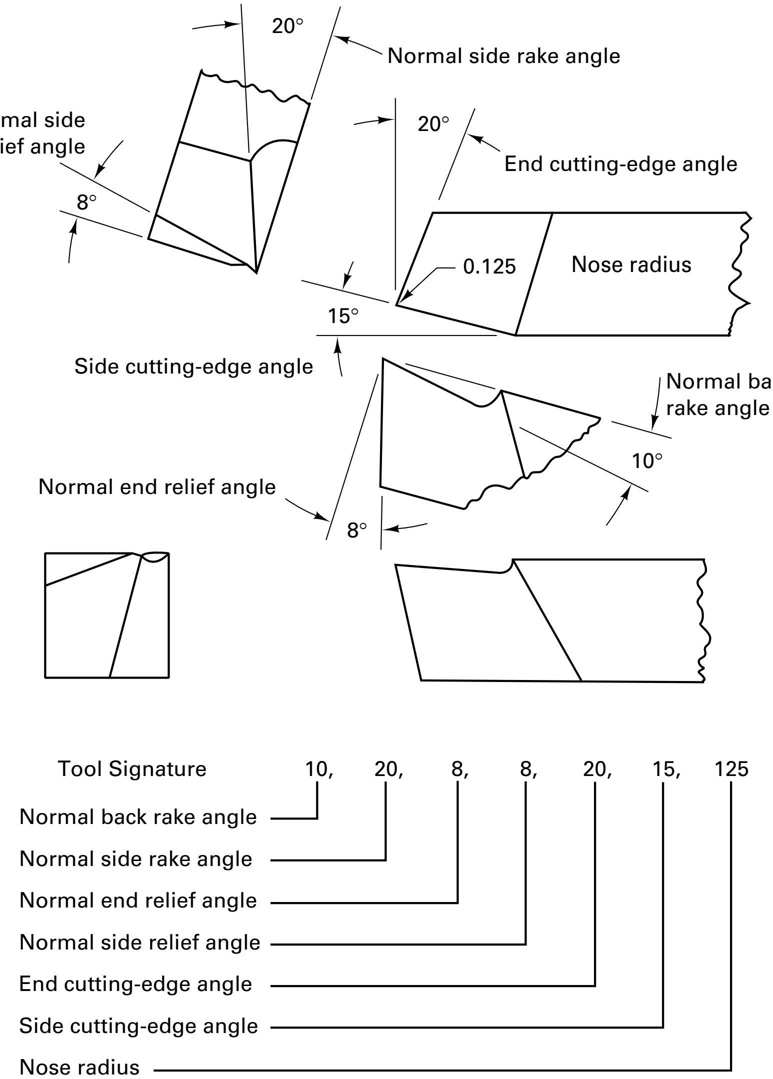

FIGURE 21-E

Chapter 21 CASE STUDY

Comparing Tool Materials Based on Tool Life

The Linus Drilling Company is trying to decide on what kind of inserts to use in their indexable insert drills. These drills do not cut at dead center but rather form a thin center slug that is pushed out of the way by the drill body. These indexable drills often provide a marked productivity improvement compared to conventional HDD drills, particularly when they are combined with coated insert tools. The company is trying to determine which type of insert to use in the drill for machining some hot rolled 8620 steel shafts using triangular inserts. The operating cost of the machine tool is $60.00 per hour. It takes about three minutes to change the inserts and about 30 seconds to unload a finished part and load a new part in the machine. The company is currently using uncoated inserts at the following operating conditions—400 sfpm and 0.020 ipr. These speeds and feeds resulted in each cutting edge producing about 40 pieces before the tool's cutting edge became dull. The tool was then indexed. Since it was a triangular tool, each tool had 6 cutting edges available before it had to be replaced. At these speeds and feeds, the drilling time was 4.8 minutes and the production rate was 11 parts per hour, while the machining cost per piece was $4.80 ($1.00/min × 4.8 min/pc.). The manufacturing engineer on the job, Brian Paul, has found three new tool materials being used in triangular insert tools. They are listed in Table CS-21 along with the data for the uncoated tool. The new materials are TiC-coated carbide, Al_20_3-coated carbide and a ceramic-coated insert with a single side, low force groove geometry. The expected cutting conditions, speeds and feeds, are given in the table along with Brian's estimates of the production rates in pieces per hour for each of these new tool materials. The low force groove geometry tools can only be used three times—they cannot be flipped over—so only three cutting edges are available per insert before it has to be replaced. Brian has argued that even though the ceramic-coated inserts cost more, they result in a lower cost per piece, considering all the costs. Determine the machining cost per piece, the tool changing cost per piece, and the tool cost per piece which make up the total cost per piece, and verify Brian's belief that these coated tools will provide some cost savings.

TABLE CS.21 Cost Comparison of Four Tool Materials, Based on Equal Tool Life

	Uncoated	TiC-Coated	Al_2O_3-coated	Al_2O_3 LFG
Cutting speed (surface ft/min)	400	640	1100	1320
Feed (in/rev)	0.020	0.022	0.024	0.028
Cutting edges available per insert	6	6	6	3
Cost of an insert ($/insert)	4.80	5.52	6.72	6.72
Tool life (pieces/cutting edge)	192	108	60	40
Tool change time per piece (min)	0.075	0.075	0.075	0.075
Nonproductive cost per piece ($/pc)	0.50	0.50	0.50	0.50
Machining time per piece (min/pc)	4.8	2.7	1.50	1.00
Machining cost per piece ($/pc)	4.80			
Tool change cost per piece ($/pc)	0.08			
Cutting tool cost per piece ($/pc)	0.02			
Total cost per piece ($)	5.40			
Production rate (pieces/hr)	11	18	29	38
Improvement in productivity based on pieces/hr (%)	0	64	164	245

Source: Data from T. E. Hale et al., "High Productivity Approaches to Metal Removal," *Materials Technology*, Spring 1980, p. 25.

CHAPTER 22

TURNING AND BORING PROCESSES

22.1 INTRODUCTION

Turning is the process of machining external cylindrical and conical surfaces. It is usually performed on a machine tool called a lathe, as shown in Figure 22-1, using a cutting tool. The workpiece is held in a workholder. More details on lathes are shown later in this chapter. As indicated in Figure 22-2, relatively simple work and tool movements are involved in turning a cylindrical surface. The workpiece is rotated and the single-point cutting tool is fed longitudinally into the workpiece. If the tool is fed at an angle to the axis of rotation, an external conical surface results. This is called *taper turning*. If the tool is fed to the axis of rotation, using a tool that is wider than the depth of the cut, the operation is called *facing*, and a flat surface is produced on the end of the cylinder.

By using a tool having a specific form or shape and feeding it radially or inward against the work, external cylindrical, conical, and irregular surfaces of limited length can also be turned. The shape of the resulting surface is determined by the shape and size

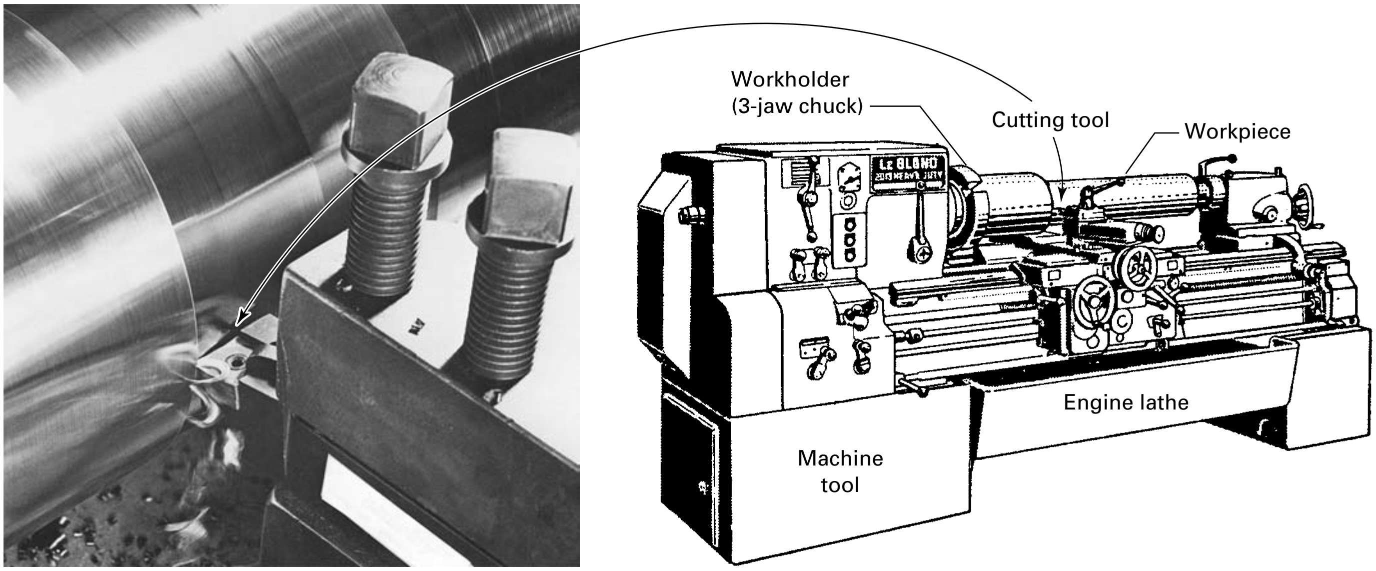

FIGURE 22-1 Schematic of a standard engine lathe performing a turning operation, with the cutting tool shown in inset.

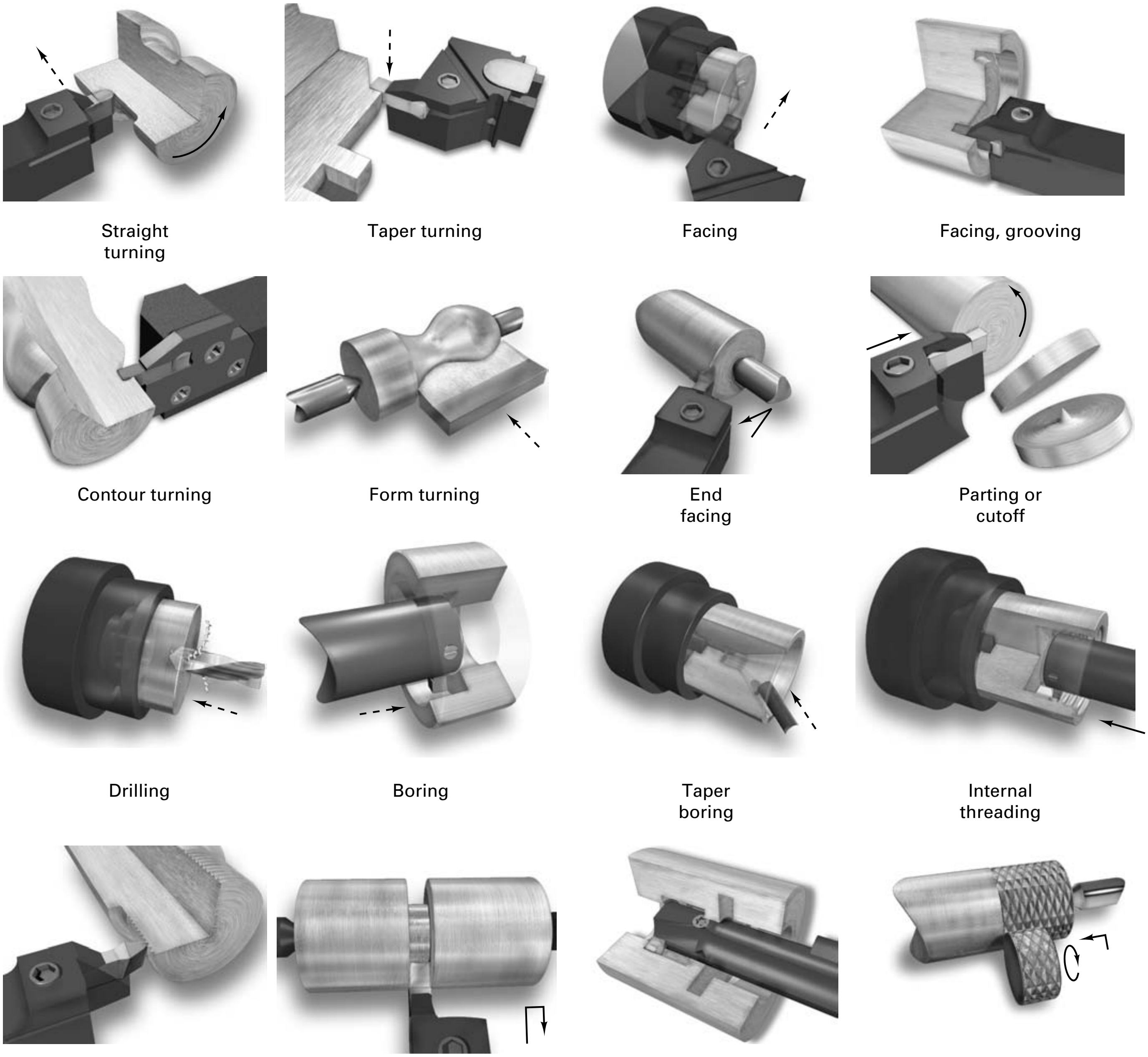

Straight turning

Taper turning

Facing

Facing, grooving

Contour turning

Form turning

End facing

Parting or cutoff

Drilling

Boring

Taper boring

Internal threading

External threading

Necking

Internal forming

Knurling

FIGURE 22-2 Basic turning machines can rotate the work and feed the tool longitudinally for turning and can perform other operations by feeding transversely. Depending on what direction the tool is fed and on what portion of the rotating workpiece is being machined, the operations have different names. The dashed arrows indicate the tool feed motion relative to the workpiece.

of the cutting tool. Such machining is called *form turning*. If the tool is fed all the way to the axis of the workpiece, it will be cut in two. This is called *parting* or *cutoff*, and a simple, thin tool is used. A similar tool is used for *necking* or *partial cutoff*.

Boring is a variation of turning. Essentially, boring is internal turning. Boring can use single-point cutting tools to produce internal cylindrical or conical surfaces. It does not create the hole but, rather, machines or opens the hole up to a specific size. Boring can be done on most machine tools that can do turning. However, boring also can be done using a rotating tool with the workpiece remaining stationary. Also, specialized machine tools have been developed that will do boring, drilling, and reaming but will not do turning. Other operations, like *threading* and *knurling*, can be done on machines used for turning. In addition, drilling, reaming, and tapping can be done on the rotation axis of the work.

In recent years, turning centers have been developed that use turrets to hold multiple-edge rotary tools in powered heads. Some new machine tools feature two opposing spindles with automatic transfer from one to the other and two turrets of tools.

22.2 FUNDAMENTALS OF TURNING, BORING, AND FACING TURNING

Turning constitutes the majority of lathe work. The cutting forces, resulting from feeding the tool from right to left, should be directed toward the headstock to force the workpiece against the workholder and thus provide better work support.

If good finish and accurate size are desired, one or more roughing cuts are usually followed by one or more finishing cuts. Roughing cuts may be as heavy as proper chip thickness, cutting dynamics, tool life, lathe horsepower, and the workpiece permit. Large *depths of cut* and smaller feeds are preferred to the reverse procedure, because fewer cuts are required and less time is lost in reversing the carriage and resetting the tool for the following cut.

On workpieces that have a hard surface, such as castings or hot-rolled materials containing mill scale, the initial roughing cut should be deep enough to penetrate the hard materials. Otherwise, the entire cutting edge operates in hard, abrasive material throughout the cut, and the tool will dull rapidly. If the surface is unusually hard, the cutting speed on the first roughing cut should be reduced accordingly.

Finishing cuts are light, usually being less than 0.015 in. in depth, with the feed as fine as necessary to give the desired finish. Sometimes a special finishing tool is used, but often the same tool is used for both roughing and finishing cuts. In most cases, one finishing cut is all that is required. However, where exceptional accuracy is required, two finishing cuts may be made. If the diameter is controlled manually, a short finishing cut ($^1/_4$ in. long) is made and the diameter checked before the cut is completed. Because the previous micrometer measurements were made on a rougher surface, it may be necessary to reset the tool in order to have the final measurement, made on a smoother surface, check exactly.

In turning, the primary cutting motion is rotational, with the tool feeding parallel to the axis of rotation (Figure 22-3). The desired cutting speed established the necessary rpm (N_s) of the rotating workpiece. The feed f_r is given in inches per revolution (ipr).

The depth of cut is d, where

$$d = \text{DOC} = \frac{D_1 - D_2}{2} \text{ inches} \tag{22-1}$$

The length of cut is the distance traveled parallel to the axis L plus some allowance or overrun A to allow the tool to enter and/or exit the cut.

Here is how the inputs to the turning process are determined. First it is necessary that the engineer select the cutting speed, V, in feet per minute, the feed (f_r), and the depth of cut, based on what material is being machined, what tool material is being used,

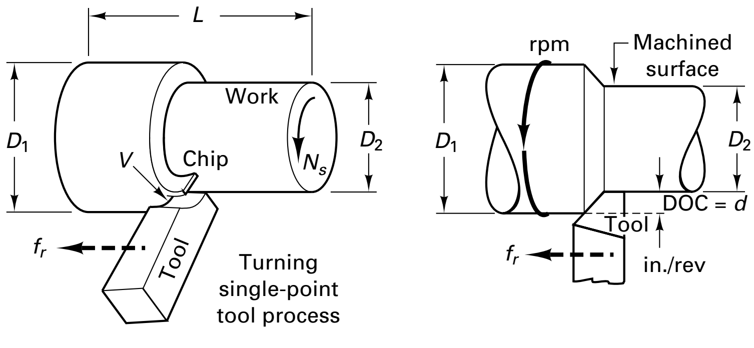

FIGURE 22-3 Basics of the turning process normally done on a lathe. The dashed arrows indicate the feed motion of the tool relative to the work.

and other factors like what process is being performed. The rpm value for the machine tool can be determined by

$$N_s = \frac{12V}{\pi D_1} \tag{22-2}$$

(using the larger diameter), where the factor of 12 is used to convert feet to inches. The cutting time is

$$T_m = \frac{L + A}{f_r N_s} \tag{22-3}$$

where A is overrun allowance, and f_r is the selected feed in inches per revolution.

Example of Turning

The 1.78-inch diameter steel bar shown in Figure 1-10 is to be turned down to a 1.10-inch diameter on a standard engine lathe. The overall length of the bar is 18.750 inches, and the region to be turned is 16.50 inches. After turning, the bar looks like stage 2. The part is made from cold-drawn free-machining steel (this means the chips breakup nicely) with a Bhn of 250. Since you want to take the bar from 1.78 to 1.10, you have a total depth of cut, d, of 0.34 inch (0.68/2). You decide you want to make two cuts, a roughing pass and a finishing pass. Rough at $d = 0.300$ and finish with $d = 0.04$ inches. Looking at the table for selecting speed and feed (Figure 20-4), you select $V = 100$ fpm and feed $= 0.020$ ipr because you have selected high-speed steel cutting tools.

The bar is held in a chuck with a feed through the hole in the spindle and is supported on the right end with a live center. The ends of the bar have been center drilled. Allowance should be 0.50 inches for approach (no overtravel). Allow 1.0 minutes to reset the tool after the first cut. To determine the inputs to the lathe, we calculate the spindle rpm:

$$N_s = 12V/\pi D_1 = 12 \times 100/3.14 \times 1.78 = 214$$

But your lathe does not have this particular rpm, so you select the closest rpm, which is 200. You don't need any further calculations for lathe inputs as you input the feed in ipr directly.

The time to make the cut is

$$T_m = \frac{L + ALL}{f_r \times N_s} = \frac{16.50 + 0.50}{0.020 \times 200} = 4.25 \text{ min}$$

You could reduce this time by changing to a coated carbide tool that would allow you to increase the cutting speed to 925 sfpm. (See table). The time for the second cut will be different if you change the feed and/or the speed to improve the surface finish. Again from the table in Figure 21-4, speed = 925, feed = 0.007, so

$$N_s = 12 \times 925/3.14 \times 1.10 = 3213 \text{ with 3200 rpm the closest value:}$$

$$T_m = \frac{L + ALL}{0.007 \times 3200} = 0.75 \text{ min}$$

The metal removal rate is

$$\text{MRR} = \frac{\text{volume removed}}{\text{time}} = \frac{(\pi D_1^2 - \pi D_2^2)L}{4L/f_r N}$$

(omitting the allowance term). By rearranging and substituting N_s, an exact expression for MRR is obtained:

$$\text{MRR} = 12 V f_r \frac{(D_1^2 - D_2^2)}{4D_1} \tag{22-4}$$

Rewriting the last term

$$\frac{D_1^2 - D_2^2}{4D_1} = \frac{D_1 - D_2}{2} \times \frac{D_1 - D_2}{2D_1}$$

Therefore, since

$$d = \frac{D_1 - D_2}{2} \text{ and } \frac{D_1 - D_2}{2D_1} \cong 1 \quad \text{for small } d$$

then,

$$\text{MRR} \cong 12\, V f_r d \text{ in.}^3/\text{min} \tag{22-5}$$

Note that Equation (22-5) is an approximate equation that assumes that the depth of cut d is small compared to the uncut diameter D_1.

BORING

Boring always involves the enlarging of an existing hole, which may have been made by a drill or may be the result of a core in a casting. An equally important and concurrent purpose of boring may be to make the hole concentric with the axis of rotation of the workpiece and thus correct any eccentricity that may have resulted from the drill starting or drifting off the center line. Concentricity is an important attribute of bored holes.

When boring is done in a lathe, the work usually is held in a chuck or on a faceplate. Holes may be bored straight, tapered, with threads, or to irregular contours. Figure 22-4 shows the relationship of the tool and the workpiece for boring. Think of boring as internal turning while feeding the tool parallel to the rotation axis of the workpiece, with two important differences.

First, the relief and clearance angles on the tool should be larger and the tool overhand (length to diameter) must be considered with regard to stability and deflection problems.

Given V and f_r for a cut of length L, the cutting time is

$$T_m = \frac{L + A}{f_r N_s} \tag{22-6}$$

where $N_s = 12V/\pi D_1$ for D_1,the diameter of bore, and A, the overrun allowance. The metal removal rate is

$$\text{MRR} = \frac{L(\pi D_1^2 - \pi D_2^2)/4}{L/f_r N}$$

where D_2 is the original hole diameter.

$$\text{MRR} \cong 12\, V f_r d \tag{22-7}$$

(omitting allowance term), where d is the depth of cut.

In most respects, the same principles are used for boring as for turning. Again, the tool should be set exactly at the same height as the axis of rotation. Larger end clearance angles help to prevent the heel of the tool from rubbing on the inner surface of the hole. Because the tool overhang will be greater, feeds and depths of cut may be reduced to reduce forces that cause tool vibration and chatter. In some cases, the boring bar may be made of tungsten carbide because of this material's greater stiffness.

FACING

Facing is the producing of a flat surface as the result of the tool being fed across the end of the rotating workpiece, as shown in Figure 22-4b. Unless the work is held on a mandrel, if both ends of the work are to be faced, it must be turned end for end after the first end is completed and the facing operation repeated.

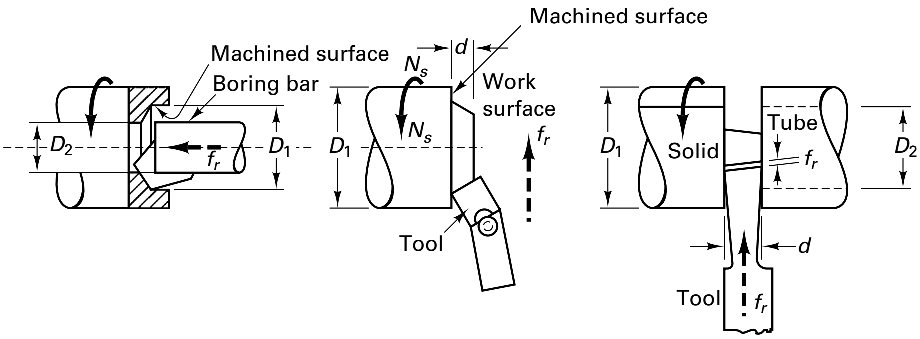

(a) Boring a drilled hole (b) Facing from the cross side (c) Cutoff or parting

FIGURE 22-4 Basic movement of boring, facing, and cutoff (or parting) process.

The cutting speed should be determined from the largest diameter of the surface to be faced. Facing may be done either from the outside inward or from the center outward. In either case, the point of the tool must be set exactly at the height of the center of rotation. Because the cutting force tends to push the tool away from the work, it is usually desirable to clamp the carriage to the lathe bed during each facing cut to prevent it from moving slightly and thus producing a surface that is not flat.

In the facing of castings or other materials that have a hard surface, the depth of the first cut should be sufficient to penetrate the hard material to avoid excessive tool wear.

In facing, the tool feeds perpendicular to the axis of the rotating workpiece. Because the rpm is constant, the cutting speed is continually decreasing as the axis is approached. The length of cut L is $D_1/2$ or $(D_1 - D_2)/2$ for a tube.

$$T_m = \text{cutting time} = \frac{L + A}{f_r N} \text{ minutes}$$

$$= \frac{\frac{D_1}{2} + A}{f_r N}$$

$$\text{MRR} = \frac{\text{VOL}}{T_m} = \frac{\pi D_1^2 d f_r N}{4L} = 6V f_r d \quad \text{in.}^3/\text{min} \tag{22-8}$$

where d is the depth of cut and $L = D_1/2$ is the length of cut.

PARTING

Parting is the operation by which one section of a workpiece is severed from the remainder by means of a cutoff tool, as shown in Figure 22-4c. Because parting tools are quite thin and must have considerable overhand, this process is more difficult to perform accurately. The tool should be set exactly at the height of the axis of rotation, be kept sharp, have proper clearance angles, and be fed into the workpiece at a proper and uniform feed rate.

In parting or cutoff work, the tool is fed (plunged) perpendicular to the rotational axis, as it was in facing. The length of cut for solid bars is $D_1/2$. For tubes,

$$L = \frac{D_1 - D_2}{2}$$

In cutoff operations, the width of the tool is d in inches, the width of the cutoff operation. The equations for T_m and MRR are then basically the same as for facing.

DEFLECTION

In boring, facing, and cutoff operations, the speeds, feeds, and depth of cut selected are generally less than those recommended for straight turning because of the large overhang of the tool often needed to complete the cuts. Recall the basic equation for deflection of a cantilever beam, modifying for machining,

$$\delta = \frac{Pl^3}{3EI} = \frac{F_c l^3}{3EI} \tag{22-9}$$

In equation 22-9, l represents the overhang of the tool, which greatly affects the deflection, so it should be minimized whenever possible. In equation 22-9,

E = modulus of elasticity

I = moment of inertia of cross section of tool

$P = F_c$ = applied load or cutting force

where $I = \pi D_1^2/64$ solid round bar

$I = \pi(D_1^4 - (D_2^4))/64$ bar with hole

D_1 = diameter of tube or bar

D_2 = inside diameter of the tube

Deflection is proportional to the fourth power of the boring bar diameter and the third power of the bar overhand. Select the largest-diameter bar diameter and minimize the overhand. Use carbide shank boring bars ($E \cong 80{,}000{,}000$ psi), and select tool geometries that direct cutting forces into the feed direction to minimize chatter. The reduction of the feed or depth of cut reduces the forces operating on the tools. The cutting speed usually controls the occurrence of chatter and vibration. See the dynamics of machining discussion in Chapter 20.

Any imbalance in the cutting forces will deflect the tool to the side, resulting in loss of accuracy in cutoff lengths. At the outset, the forces will be balanced if there is no side rake on the tool. As the cutoff tool reaches the axis of the rotating part, the tool will be deflected away from the spindle, resulting in a change in the length of the part.

PRECISION BORING

Sometimes bored holes are slightly bell mouthed because the tool deflects out of the work as it progresses into the hole. This often occurs in castings and forgings where the holes have draft angles so that the depth of cut increases as the tool progresses down the bore. This problem can usually be corrected by repeating the cut with the same tool setting; however, the total cutting time for the part is increased. Alternately, a more robust setup can be used. Large holes may be precision bored using the setup shown in Figure 22-5, where a pilot bushing is placed in the spindle to mate with the hardened ground pilot of the boring bar. This setup eliminates the cantilever problems common to boring.

Because the rotational relationship between the work and the tool is a simple one and is employed on several types of machine tools, such as lathes, drilling machines, and milling machines, boring is very frequently done on such machines. However, several machine tools have been developed primarily for boring, especially in cases involving large workpieces or for large-volume boring of smaller parts. Such machines as these are also capable of performing other operations, such as milling and turning. Because boring frequently follows drilling, many boring machines also can do drilling, permitting both operations to be done with a single setup of the work.

DRILLING

Drilling, discussed in detail in Chapter 23, can be done on lathes with the drill mounted in the tailstock quill of engine lathes or the turret on turret lathes and fed against a

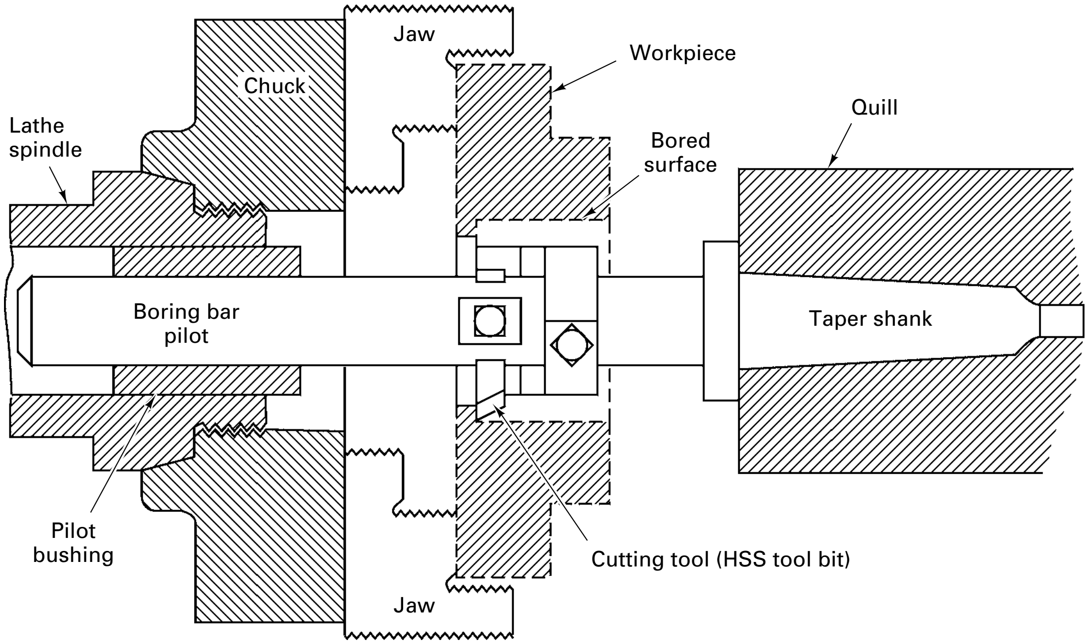

FIGURE 22-5 Pilot boring bar mounted in tailstock of lathe for precision boring large hole in casting. The size of the hole is controlled by the rotation diameter of the cutting tool.

rotating workpiece. Straight-shank drills can be held in Jacobs chucks, or drills with taper shanks mounted directly in the quill hole can drill holes online (center of rotation). Drills can also be mounted in the turrets of modern turret centers and fed automatically on the rotational axis of the workpiece or off axis with power heads. It also is possible to drill on a lathe with the drill bit mounted and rotated in the spindle while the work remains stationary, supported on the tailstock or the carriage of the lathe.

The usual speeds used for drilling should be selected for lathe work. Because the feed may be manually controlled, care must be exercised, particularly in drilling small holes. Coolants should be used where required. In drilling deep holes, the drill should be withdrawn occasionally to clear chips from the hole and to aid in getting coolant to the cutting edges. This is called peck drilling. See Chapter 23 for further discussion on drilling.

REAMING

Reaming on a lathe involves no special precautions. Reamers are held in the tailstock quill, taper-shank types being mounted directly and straight-shank types by means of a drill chuck. Rose-chucking reamers are usually used (see Chapter 23). Fluted-chucking reamers may also be used, but these should be held in some type of holder that will permit the reamer to float (i.e., have some compliance) in the hole and conform to the geometry created by the boring process.

KNURLING

Knurling produces a regularly shaped, roughened surface on a workpiece. Although knurling also can be done on other machine tools, even on flat surfaces, in most cases it is done on external cylindrical surfaces using lathes. Knurling is a chipless, cold-forming process. See Figures 22-6 and 22-18 for examples. The two hardened rolls are pressed against the rotating workpiece with sufficient force to cause a slight outward and lateral displacement of the metal to form the knurl in a raised, diamond pattern. Another type of knurling tool produces the knurled pattern by cutting chips. Because it involves less pressure and thus does not tend to bend the workpiece, this method is often preferred for workpieces of small diameter and for use on automatic or semiautomatic machines.

SPECIAL ATTACHMENTS

For engine lathes, taper turning and milling can be done on a lathe but require special attachments. The *milling attachment* is a special vise that attaches to the cross slide to hold work. The milling cutter is mounted and rotated by the spindle. The work is fed by means of the cross-slide screw. *Tool-post grinders* are often used to permit grinding to be done on a lathe. Taper turning will be discussed later. *Duplicating attachments* are available that, guided by a template, will automatically control the tool movements for turning irregularly shaped parts. In some cases, the first piece, produced in the normal manner, may serve as the template for duplicate parts. To a large extent, duplicating lathes using templates have been replaced by numerically controlled lathes and milling is done with power tools in NC turret lathes.

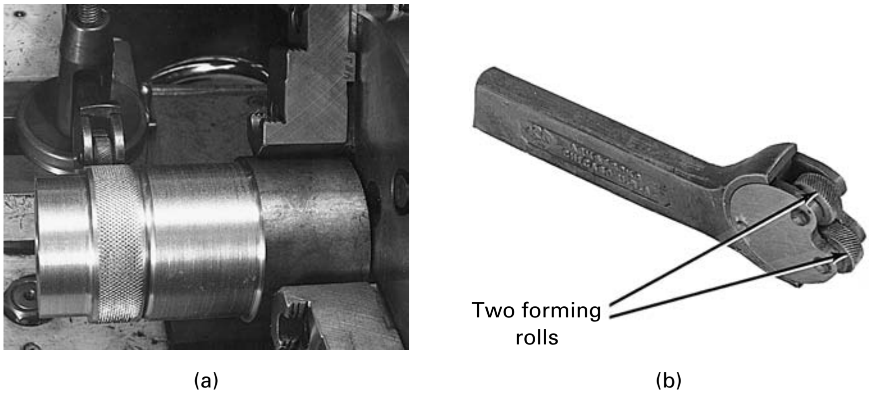

(a) (b)

FIGURE 22-6 (a) Knurling in a lathe, using a forming-type tool, and showing the resulting pattern on the workpiece; (b) knurling tool with forming rolls. *(Courtesy of Armstrong Brothers Tool Company.)*

DIMENSIONAL ACCURACY

Dimensional accuracy in turning operations is controlled by many factors. Precision is influenced by deflection due to the cutting forces and surface roughness. Tool wear causes the workpiece dimension to change from the initial diameter when the tool is sharp to the diameter obtained after the tool has worn. The cutting forces increase as the tool wears, resulting in increased deflection between the workpiece and the cutting tool. A built-up edge (BUE) may form at the tip of the cutting tool. A BUE has the tendency to change the actual diameter of the workpiece. Thus, to hold close tolerances, the size of the wear land, the magnitude of the radial (thrust) force, and the elimination of the BUE should be taken into account. See Figure 22-7.

Dimensional accuracy will also be influenced by the workpiece shape, the material, the rigidity of all elements, the surface finish, and vibrations. For example, holding the dimensional accuracy of a boring operation on a deep hole is a problem, due to the deflection (rigidity) of the boring bar.

Turned surfaces display characteristic turning grooves that are produced by the feed and the tool tip corner radius, as shown in Figure 22-7. The roughness resulting from feed marks from a round-nosed tool can be approximated by the formula

$$y = \mathrm{CR} - \frac{\sqrt{\mathrm{CR}^2 - f_r^2}}{4} \cong \frac{f_r^2}{8\mathrm{CR}} \tag{22-10}$$

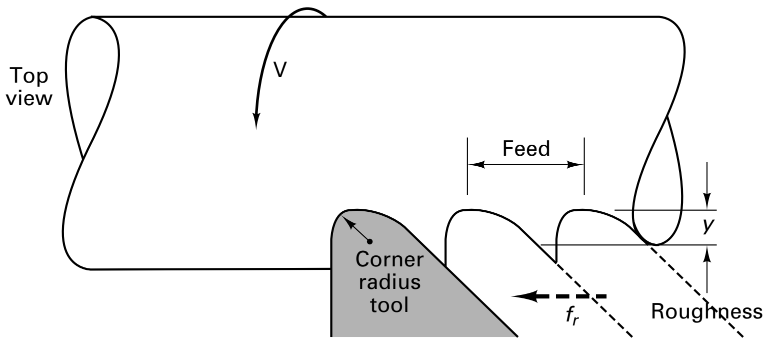

The feed and the corner radius (CR) of the cutting tool influence the surface roughness

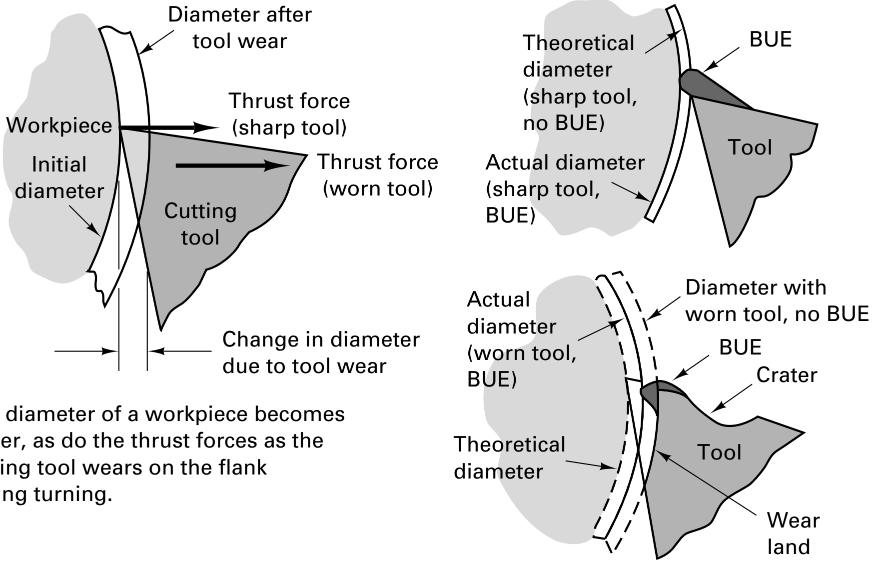

The diameter of a workpiece becomes larger, as do the thrust forces as the cutting tool wears on the flank during turning.

Regardless of whether the tool is dull or sharp, a built-up edge (BUE) causes the diameter of the workpiece to be smaller than desired.

FIGURE 22-7 Accuracy and precision in turning is a function of many factors, including tool wear and BUE.

where y is the roughness height, CR the corner radius of insert, and f_r the feed rate (in./rev). To improve the surface finish, reduce the feed and increase the corner radius.

Other factors like BUE formations, cutting-edge sharpness, and tool wear grooves in the flank wear area also affect the surface finish in turning. Flank wear and BUE can combine to affect both surface finish and accuracy, as shown in Figures 22-1 and 22-7. Wear on the corner radius may cause grooves and nicks, which produce additional surface roughness on the finish-turned surfaces. Thus, to hold the surface roughness within specified limits, minimize tool wear and use small feeds and large-corner-radius tools. To minimize BUE formation, employ cutting speeds higher than those used in rough turning operations.

22.3 LATHE DESIGN AND TERMINOLOGY

Knowing the terminology of a machine tool is fundamental to understanding how it performs the basic processes, how the workholding devices are interchanged, and how the cutting tools are mounted and interfaced to the work. *Lathes* are machine tools designed primarily to do turning, facing, and boring. Very little turning is done on other types of machine tools, and none can do it with equal facility. Lathes also can do facing, drilling, and reaming, and recent designs permit milling and drilling operations using live (also called powered) spindles in multiple-tool turrets, so their versatility permits multiple operations to be done with a single setup of the workpiece. Consequently, the lathe is probably the most common machine tool, along with milling machines.

Lathes in various forms have existed for more than 2000 years, but modern lathes date from about 1797, when Henry Maudsley developed one with a leadscrew, providing controlled, mechanical feed of the tool. This ingenious Englishman also developed a change-gear system that could connect the motions of the spindle and leadscrew and thus enable threads to be cut.

LATHE DESIGN

The essential components of an *engine lathe* (Figure 22-8) are the bed, headstock assembly (which includes the spindle), tailstock assembly, carriage assembly, quick-change gearbox, and the leadscrew and feed rod. The *bed* is the base and backbone of a lathe.

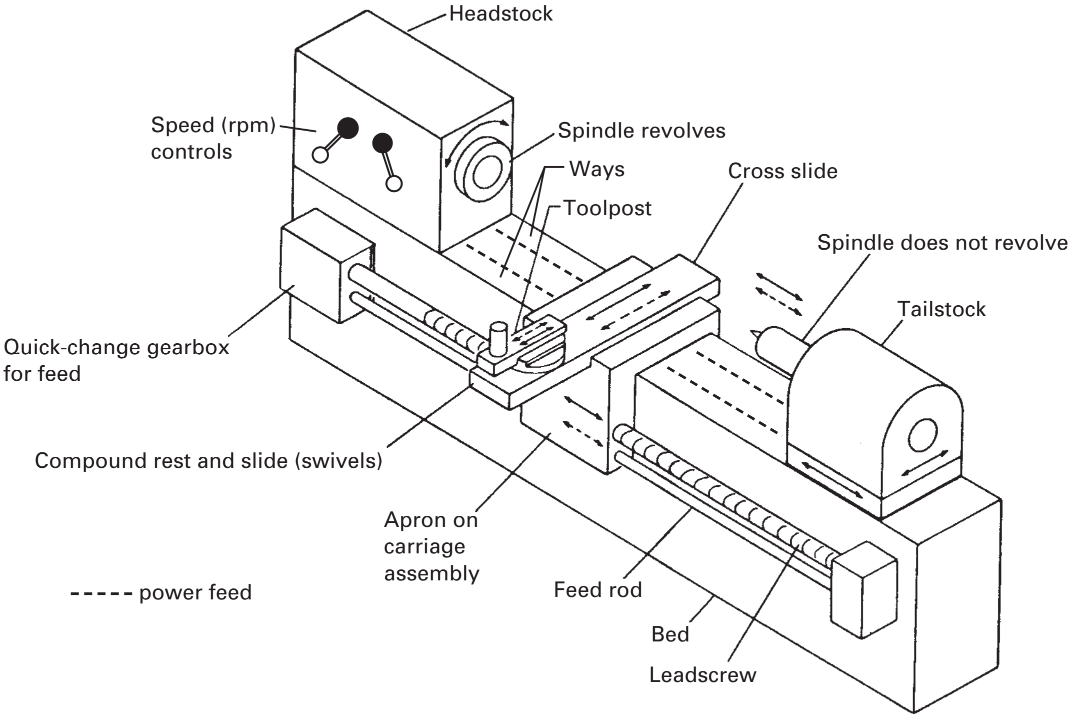

FIGURE 22-8 Schematic diagram of an engine lathe, showing basic components.

The bed is usually made of well-normalized or aged gray or nodular cast iron and provides a heavy, rigid frame on which all the other basic components are mounted. Two sets of parallel, longitudinal *ways*, inner and outer, are contained on the bed. On modern lathes, the ways are surface hardened and precision machined, and care should be taken to assure that the ways are not damaged. Any inaccuracy in them usually means that the accuracy of the entire lathe is destroyed.

The *headstock*, mounted in a fixed position on the inner ways, provides powered means to rotate the work at various rpm values. Essentially, it consists of a hollow *spindle*, mounted in accurate bearings, and a set of transmission gears—similar to a truck transmission—through which the spindle can be rotated at a number of speeds. Most lathes provide from 8 to 18 choices of rpm. On modern lathes all the rpm rates can be obtained merely by moving from two to four levers or the lathe has a continuously variable spindle rpm using electrical or mechanical drives.

The accuracy of a lathe is greatly dependent on the *spindle*. It carries the workholders and is mounted in heavy bearings, usually preloaded tapered roller or ball types. The spindle has a hole extending through its length, through which long bar stock can be fed. The size of this hole is an important dimension of a lathe because it determines the maximum size of bar stock that can be machined when the materials must be fed through the spindle.

The spindle protrudes from the gearbox and contains means for mounting various types of workholding devices (chucks, face and dog plates, collets). Power is supplied to the spindle from an electric motor through a V-belt or silent-chain drive. Most modern lathes have motors of from 5 to 25 hp to provide adequate power for carbide and ceramic tools cutting hard materials at high cutting speeds.

For the classic engine lathe, the *tailstock* assembly consists, essentially, of three parts. A lower casting fits on the inner ways of the bed, can slide longitudinally, and can be clamped in any desired location. An upper casting fits on the lower one and can be moved transversely upon it, on some type of keyed ways, to permit aligning the tailstock and headstock spindles (for turning tapers). The third major component of the assembly is the *tailstock quill*. This is a hollow steel cylinder, usually about 2 to 3 in. in diameter, that can be moved longitudinally in and out of the upper casting by means of a handwheel and screw. The open end of the quill hole has a Morse taper. Cutting tools or a *lathe center* are held in the quill. A graduated scale is usually engraved on the outside of the quill to aid in controlling its motion in and out of the upper casting. A locking device permits clamping the quill in any desired position. In recent years, dual-spindle NC turning centers have emerged, where a subspindle replaces the tailstock assembly. Parts can be automatically transferred from the spindle to the subspindle for turning the back end of the part. See Chapters 31 and 36 for more on NC turning centers.

The *carriage assembly*, together with the apron, provides the means for mounting and moving cutting tools. The *carriage*, a relatively flat H-shaped casting, rides on the outer set of ways on the bed. The *cross slide* is mounted on the carriage and can be moved by means of a feed screw that is controlled by a small handwheel and a graduated dial. The cross slide thus provides a means for moving the lathe tool in the facing or cutoff direction.

On most lathes, the tool post is mounted on a *compound rest*. See Figure 22-9. The compound rest can rotate and translate with respect to the cross slide, permitting further positioning of the tool with respect to the work. The *apron*, attached to the front of the carriage, has the controls for providing manual and powered motion for the carriage and powered motion for the cross slide. The carriage is moved parallel to the ways by turning a handwheel on the front of the apron, which is geared to a pinion on the back side. This pinion engages a rack that is attached beneath the upper front edge of the bed in an inverted position.

Powered movement of the carriage and cross slide is provided by a rotating *feed rod*. The feed rod, which contains a keyway, passes through the two reversing bevel pinions (Figure 22-10) and is keyed to them. Either pinion can be activated by means of the feed reverse lever, thus providing "forward" or "reverse" power to the carriage. Suitable clutches connect either the rack pinion or the cross-slide screw to provide longitudinal motion of the carriage or transverse motion of the cross slide.

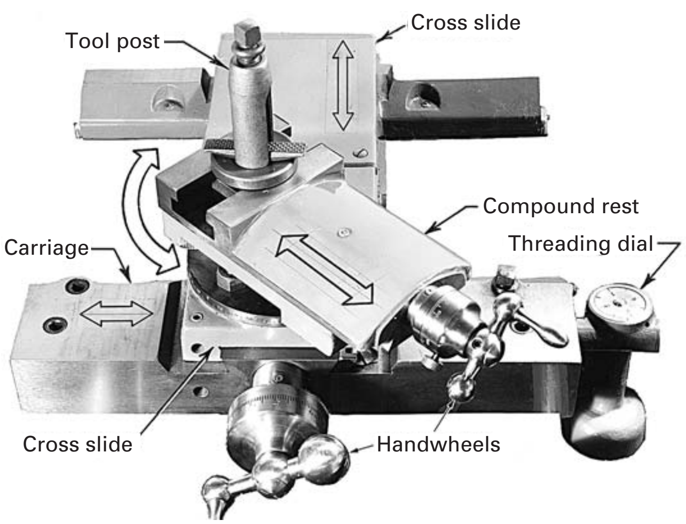

FIGURE 22-9 The cutting tools for lathe work are held in the tool post on the compound rest, which can translate and swivel.

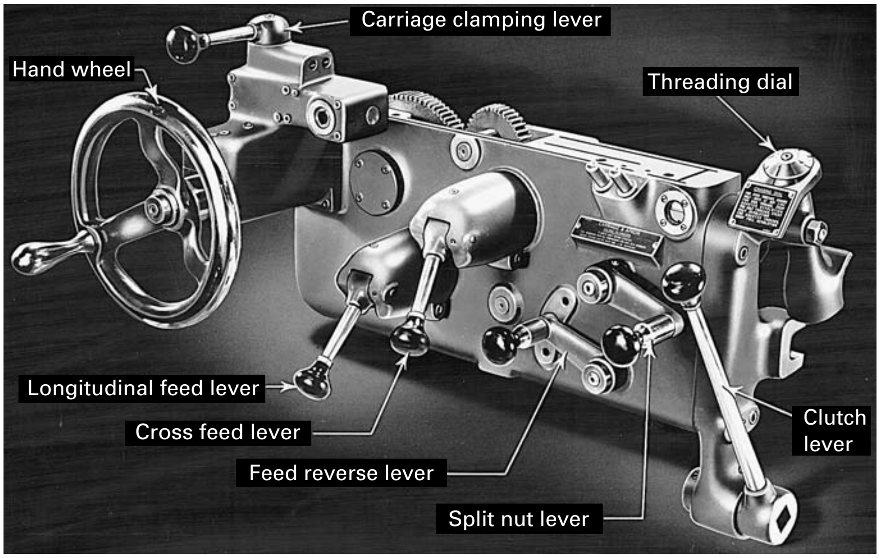

(a)

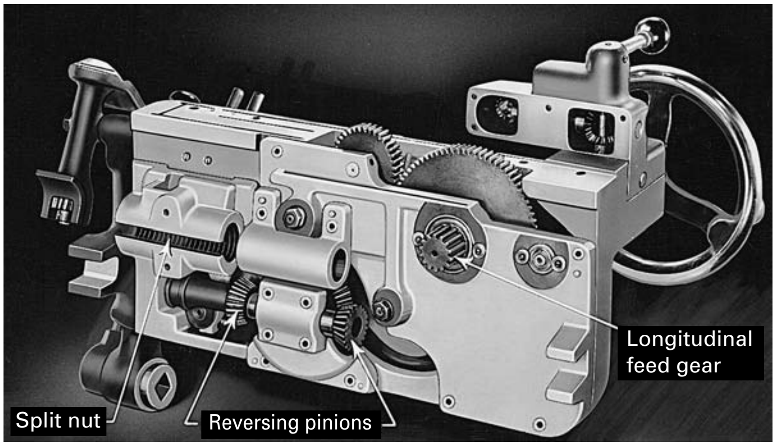

(b)

FIGURE 22-10 The carriage, cross slide, and apron assembly for an engine lathe.

For cutting threads, a *leadscrew* is used. When a friction clutch is used to drive the carriage, motion through the leadscrew is by a direct, mechanical connection between the apron and the leadscrew. A *split nut* is closed around the leadscrew by means of a lever on the front of the apron directly driving the carriage without any slippage.

Modern lathes have *quick-change gearboxes*, driven by the spindle, that connect the feed rod and leadscrew. Thus when the spindle turns a revolution, the tool (mounted on the carriage) translates (longitudinally or transversely) a specific distance in inches—that is, inches per revolution (ipr). This revolutions per minute, *rpm* or N_s, times the feed, f_r, gives the feed rate, f, in inches per minute that the tool is moving. In this way, the calculations for turning rpm and feed in inches per revolution are "mechanically related." Typical lathes may provide as many as 48 feeds, ranging from 0.002 to 0.118 in. (0.05 to 3 mm) per revolution of the spindle, and, through the leadscrew, leads from to 92 threads per inch.

SIZE DESIGNATION OF LATHES

The size of a lathe is designated by two dimensions. The first is known as the *swing*. This is the maximum diameter of work that can be rotated on a lathe. Swing is approximately twice the distance between the line connecting the lathe centers and the nearest point on the ways. The maximum diameter of a workpiece that can be mounted between centers is somewhat less than the swing diameter because the workpiece must clear the carriage assembly as well as the ways. The second size dimension is the *maximum distance between centers*. The swing thus indicates the maximum workpiece diameter that can be turned in the lathe, while the distance between centers indicates the maximum length of workpiece that can be mounted between centers.

TYPES OF LATHES

Lathes used in manufacturing can be classified as speed, engine, toolroom, turret, automatics, tracer, and numerical control turning centers. Speed lathes usually have only a headstock, a tailstock, and a simple tool post mounted on a light bed. They ordinarily have only three or four speeds and are used primarily for wood turning, polishing, or metal spinning. Spindle speeds up to about 4000 rpm are common.

Engine lathes are the type most frequently used in manufacturing. Figure 22-1 and Figure 22-8 are examples of this type. They are heavy-duty machine tools with all the components described previously and have power drive for all tool movements except on the compound rest. They commonly range in size from 12- to 24-in. swing and from 24- to 48-in. center distances, but swings up to 50 in. and center distances up to 12 ft are not uncommon. Very large engine lathes (36- to 60-ft-long beds) are therefore capable of performing roughing cuts in iron and steel at depths of cut of $^1/_2$ to 2 in. and at cutting speeds at 50 to 200 sfpm with WC tools run at 0.010 to 0.100 in./rev. To perform such heavy cuts requires rigidity in the machine tool, the cutting tools, the workholder, and the workpiece (using steady rests and other supports) and large horsepower (50 to 100 hp).

Most engine lathes are equipped with chip pans and a built-in coolant circulating system. Smaller engine lathes, with swings usually not over 13 in., also are available in *bench type*, designed for the bed to be mounted on a bench or table.

Toolroom lathes have somewhat greater accuracy and, usually, a wider range of speeds and feeds than ordinary engine lathes. Designed to have greater versatility to meet the requirements of tool and die work, they often have a continuously variable spindle speed range and shorter beds than ordinary engine lathes of comparable swing, since they are generally used for machining relatively small parts. They may be either bench or pedestal type.

Several types of special-purpose lathes are made to accommodate specific types of work. On a *gap-bed lathe*, for example, a section of the bed, adjacent to the headstock, can be removed to permit work of unusually large diameter to be swung. Another example is the *wheel lathe*, which is designed to permit the turning of railroad-car wheel-and-axle assemblies.

Figure 22-11 shows a CNC vertical turning lathe. Vertical lathes are an excellent alternative to large horizontal CNC lathes. Gravity-aided seating of large/heavy work-

FIGURE 22-11 This CNC vertical turning center is used for turning large circular parts rotated under vertically mounted tools.

pieces allows a high degree of process repeatability. A smaller footprint, lower initial cost, and increased productivity are all advantages when compared to traditional horizontal lathes.

Although engine lathes are versatile and very useful, the time required for changing and setting tools and for making measurements on the workpiece is often a large percentage of the cycle time. Often, the actual chip-production time is less than 30% of the total cycle time. Methods to reduce setup and tool-change time are now well known, reducing setups to minutes and unload/load steps to seconds. The placement of single-cycle machinetools into interim or lean manufacturing cells will increase the productivity of the workers because they can run more than one machine. Turret lathes, screw machines, and other types of semiautomatic and automatic lathes have been highly developed and are widely used in manufacturing as another means to improve cutting productivity.

Turret Lathes The basic components of a *turret lathe* are depicted in Figure 22-12. Basically, a longitudinally feedable, hexagon turret replaces the tailstock. The turret, on which six tools can be mounted, can be rotated about a vertical axis to bring each tool into operating position, and the entire unit can be translated parallel to the ways, either manually or by power, to provide feed for the tools. When the turret assembly is backed away from the spindle by means of a capstan wheel, the turret indexes automatically at the end of its movement, thus bringing each of the six tools into operating position in sequence.

The square turret on the cross slide can be rotated manually about a vertical axis to bring each of the four tools into operating position. On most machines, the turret can be moved transversely, either manually or by power, by means of the cross slide, and longitudinally through power or manual operation of the carriage. In most cases, a fixed tool holder also is added to the back end of the cross slide; this often carries a parting tool.

Through these basic features of a turret lathe, a number of tools can be set up on the machine and then quickly be brought successively into working position so that a complete part can be machined without the necessity for further adjusting, changing tools, or making measurements.

The two basic types of turret lathes are the ram-type turret lathe and the saddle-type turret lathe. In the *ram-type turret lathe*, the ram and turret are moved up to the cutting position by means of the capstan wheel, and the power feed is then engaged. As the ram is moved toward the headstock, the turret is automatically locked into position so that rigid tool support is obtained. Rotary stopscrews control the forward travel of

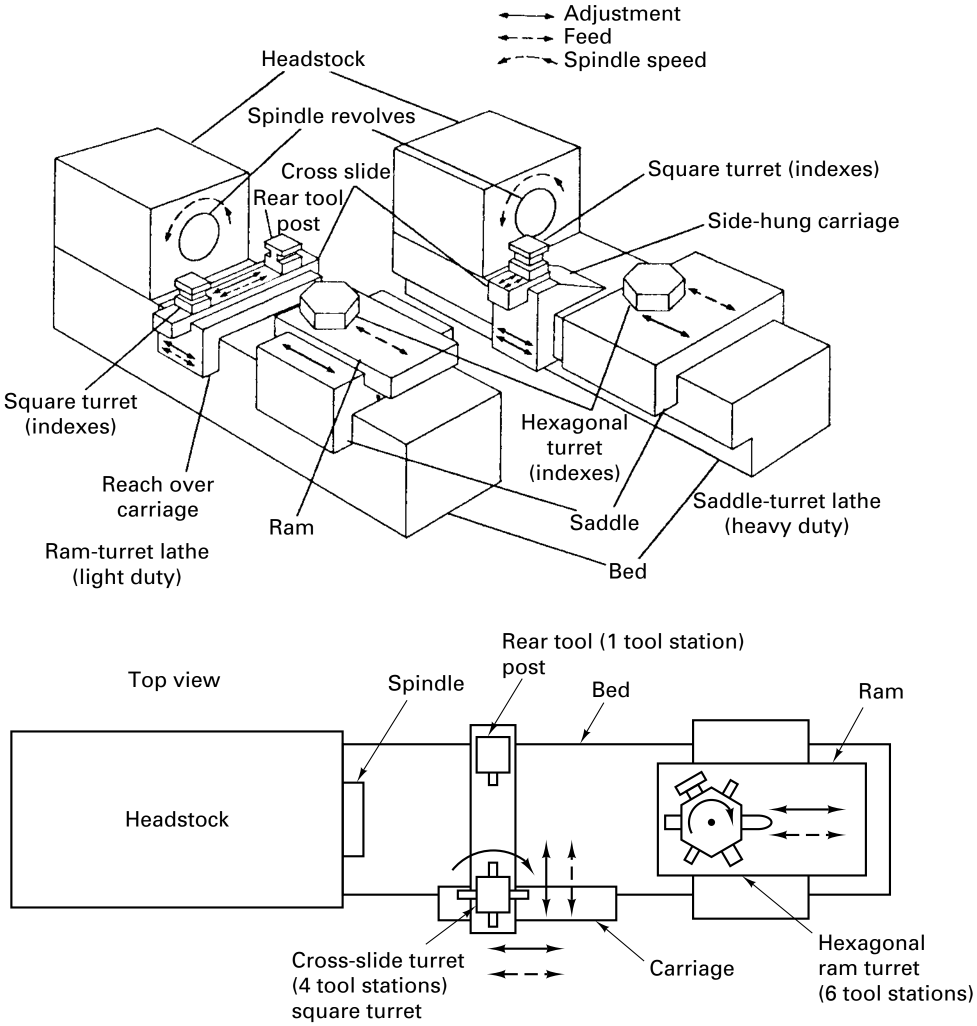

FIGURE 22-12 Block diagrams of ram- and saddle-turret lathe.

the ram, one stop being provided for each face on the turret. The proper stop is brought into operating position automatically when the turret is indexed. A similar set of stops is usually provided to limit movement of the cross slide. The *saddle-type turret lathe* provides a more rugged mounting for the hexagon turret than can be obtained by the ram-type mounting. In *saddle-type lathes*, the main turret is mounted directly on the saddle, and the entire saddle and turret assembly reciprocates. Larger turret lathes usually have this type of mounting. However, because the saddle-turret assembly is rather heavy, this type of mounting provides less rapid turret reciprocation. When such lathes are used with heavy tooling for making heavy or multiple cuts, a *pilot arm* attached to the headstock engages a pilot hole attached to one or more faces of the turret to give additional rigidity. Turret-lathe headstocks can shift rapidly between spindle speeds and brake rapidly to stop the spindle very quickly. They also have automatic stock-feeding for feeding bar stock through the spindle hole. If the work is to be held in a chuck, some type of air-operated chuck or a special clamping fixture is often employed to reduce the time required for part loading and unloading.

Single-Spindle Automatic Screw Machines. There are two common types of *single-spindle screw machines*. One, an American development and commonly called the turret type (Brown & Sharpe), is shown in Figure 22-13. The other is of Swiss origin and is referred to as the Swiss type. The *Brown & Sharpe screw machine* is essentially a small automatic turret lathe, designed for bar stock, with the main turret mounted in a vertical plane on a ram. Front and rear tool holders can be mounted on the cross slide. All motions of the turret, cross slide, spindle, chuck, and stock-feed mechanism are controlled

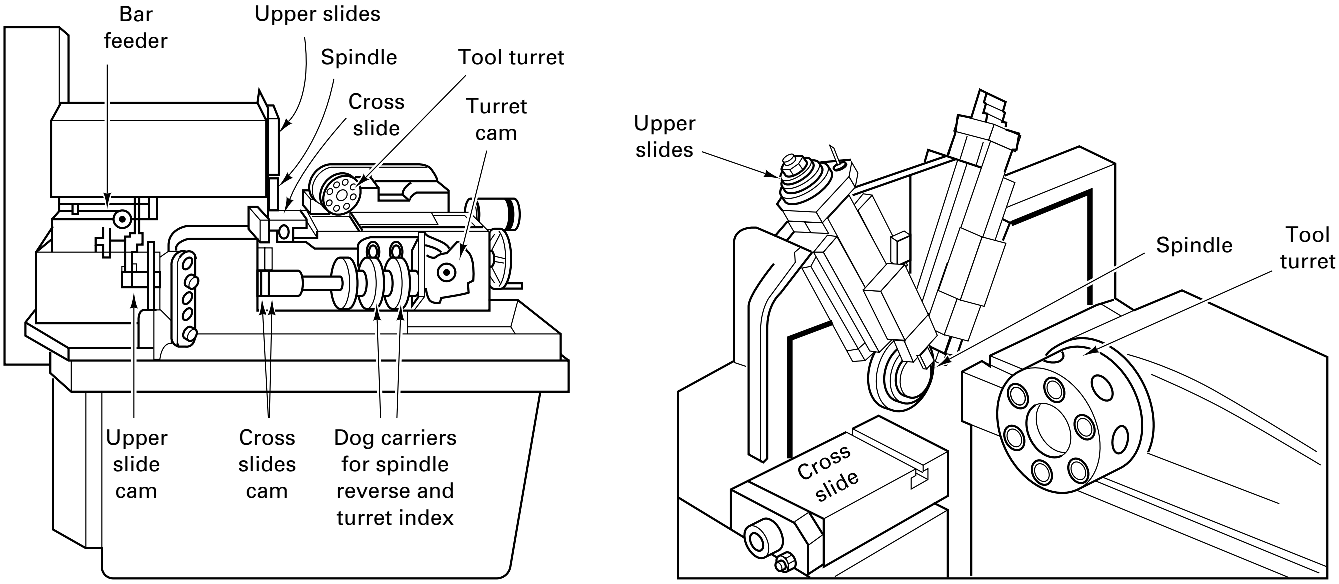

FIGURE 22-13 On the turret-type single-spindle automatic, the tools must take turns to make cuts.

by cams. The turret cam is essentially a program that defines the movement of the turret during a cycle. These machines are usually equipped with an automatic rod-feeding magazine that feeds a new length of bar stock into the collet (the workholding device) as soon as one rod is completely used.

Often, screw machines of the Brown & Sharpe type are equipped with a transfer or "picking" attachment. This device picks up the workpiece from the spindle as it is cut off and carries it to a position where a secondary operation is performed by a small, auxiliary power head. In this manner screwdriver slots are put in screw heads, small flats are milled parallel with the axis of the workpiece, or holes are drilled normal to the axis.

On the *Swiss-type automatic screw machine*, the cutting tools are held and moved in radial slides (Figure 22-14). Disk cams move the tools into cutting position and provide feed into the work in a radial direction only; they provide any required longitudinal feed by reciprocating the headstock.

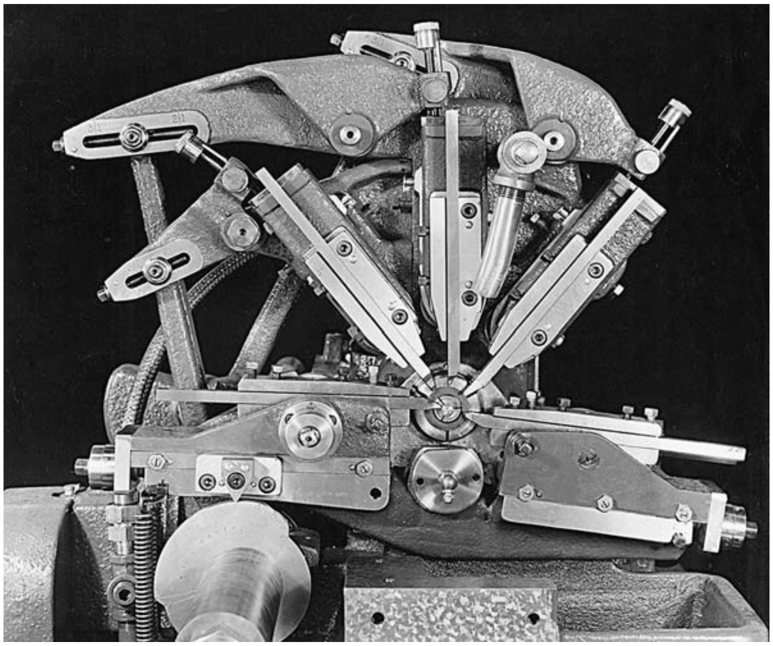

FIGURE 22-14 Close-up view of a Swiss-type screw machine, showing the tooling and radial tool sides, actuated by rocker arms controlled by a disk cam, shown in lower left. *(Courtesy of George Gorton Machine Corporation.)*

Most machining on Swiss-type screw machines is done with single-point cutting tools. Because they are located close to the spindle collet, the workpiece is not subjected to much deflection. Consequently, these machines are particularly well suited for machining very small parts.

Both types of single-spindle screw machines can produce work to close tolerances, the Swiss-type probably being somewhat superior for very small work. Tolerances of 0.0002 to 0.0005 in. are not uncommon. The time required for setting up the machine is usually an hour or two and can be much less. One person can tend many machines, once they are properly tooled. They have short cycle times, frequently less than 30 seconds per piece.

Multiple-Spindle Automatic Screw Machines. Single-spindle screw machines utilize only one or two tooling positions at any given time. Thus the total cycle time per workpiece is the sum of the individual machining and tool-positioning times. On *multiple-spindle screw machines*, sufficient spindles, usually four, six, or eight, are provided so that many tools can cut simultaneously. Thus, the cycle time per piece is equal to the maximum cutting time of a single tool position plus the time required to index the spindles from one position to the next.

The two distinctive features of multiple-spindle screw machines are shown in Figure 22-15. First, the six spindles are carried in a rotatable drum that indexes in order to bring each spindle into a different working position. Second, a nonrotating tool slide contains the same number of tool holders as there are spindles and thus provides and positions a cutting tool (or tools) for each spindle. Tools are fed by longitudinal reciprocating motion. Most machines have a cross slide at each spindle position so that an additional tool can be fed from the side for facing, grooving, knurling, beveling, and cutoff operations. These slides are also shown in Figure 22-15. All motions are controlled automatically.

Starting with the sixth position, follow the sequence of processing steps on the tooling sheet for making a part shown in Figure 22-15. With a tool position available on the end tool slide for each spindle (except for a stock-feed stop at position 6), when the slide moves forward, these tools cut essentially simultaneously. At the same time, the tools in the cross slides move inward and make their cuts. When the forward cutting motion of the end tool slide is completed, it moves away from the work, accompanied by the outward movement of the radial slides. The spindles are indexed one position, by rotation of the spindle carrier, to position each part for the next operation to be performed. At spindle position 5, finished pieces are cut off. Bar stock 1 in. in diameter is fed to correct length for the beginning of the next operation. Thus a piece is completed each time the tool slide moves forward and back. Multiple-spindle screw machines are made in a considerable range of sizes, determined by the diameter of the stock that can be accommodated in the spindles. There may be four, five, six, or eight spindles. The operating cycle of the end tool slide is determined by the operation that requires the longest time.

Once a multiple-spindle screw machine is set up, it requires only that the bar stock feed rack be supplied and the finished products checked periodically to make sure that they are within desired tolerances. One operator usually services many machines.

Most multiple-spindle screw machines use cams to control the motions. Setting up the cams and the tooling for a given job may require from 2 to 20 hours. However, once such a machine is set up, the processing time per part is very short. Often, a piece may be completed every 10 seconds. Typically, a minimum of 2000 to 5000 parts are required in a lot to justify setting up and tooling a multiple-spindle automatic screw machine. The precision of multiple-spindle screw machines is good, but seldom as good as that of single-spindle machines. However, tolerances from 0.0005 to 0.001 in. on the diameter are typical.

■ 22.4 CUTTING TOOLS FOR LATHES

LATHE CUTTING TOOLS

Most lathe operations are done using single-point *cutting tools*, such as the classic tool designs shown in Figure 22-16. On right-hand turning (and left-hand turning) and facing tools, the cutting usually takes place on the side of the tool; therefore, the side rake

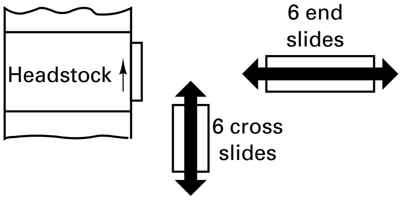

All spindles on multiple-spindle automatic have the same tool path

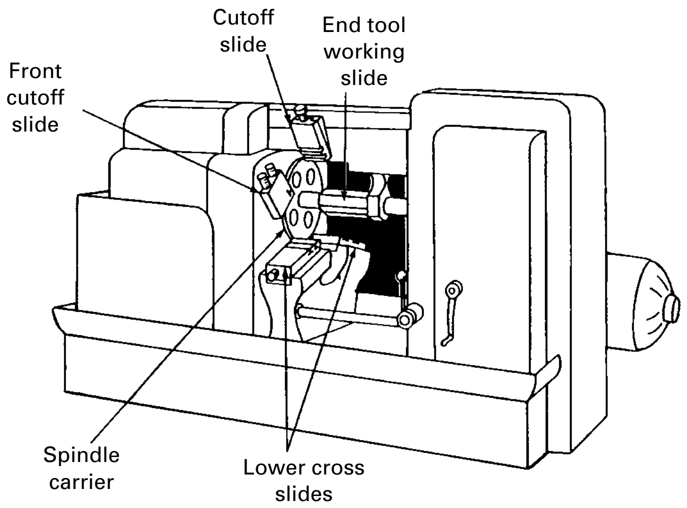

The six spindle automatic

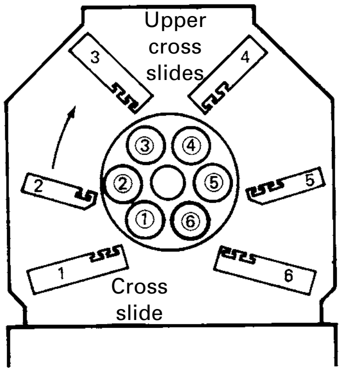

Spindle arrangement for 6-spindle automatic. The barstock is usually fed to a stop at position 6. The cutoff position is the one preceding the bar feed position.

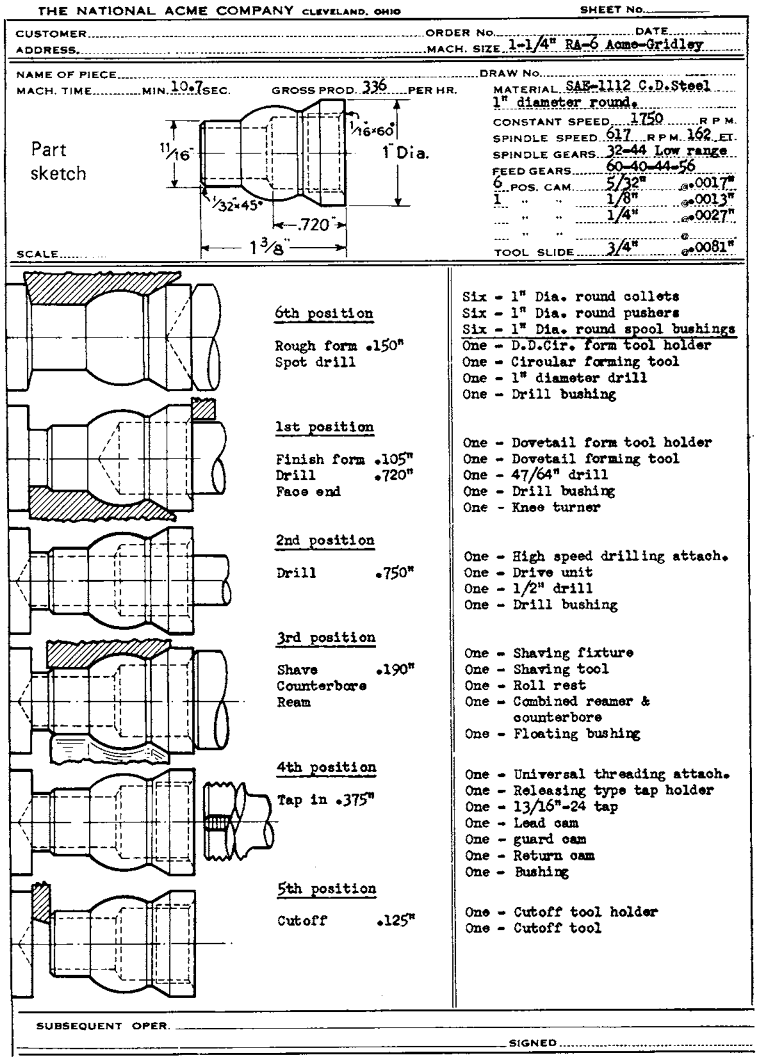

THE NATIONAL ACME COMPANY CLEVELAND, OHIO SHEET No.

CUSTOMER ORDER No. DATE
ADDRESS. MACH. SIZE 1-1/4" RA-6 Acme-Gridley

NAME OF PIECE DRAW No.
MACH. TIME MIN. 10.7 SEC. GROSS PROD. 336 PER HR.
MATERIAL SAE-1112 C.D.Steel
1" diameter round.
CONSTANT SPEED 1750 R P M.
SPINDLE SPEED 617 R P M. 162 FT.
SPINDLE GEARS 32-44 Low range
FEED GEARS 60-40-44-56
6 POS. CAM 5/32" @.0017"
1 " " 1/8" @.0013"
" " 1/4" @.0027"
" " @
TOOL SLIDE 3/4" @.0081"
SCALE

6th position

Rough form .150"
Spot drill

Six - 1" Dia. round collets
Six - 1" Dia. round pushers
Six - 1" Dia. round spool bushings
One - D.D.Cir. form tool holder
One - Circular forming tool
One - 1" diameter drill
One - Drill bushing

1st position

Finish form .105"
Drill .720"
Face end

One - Dovetail form tool holder
One - Dovetail forming tool
One - 47/64" drill
One - Drill bushing
One - Knee turner

2nd position

Drill .750"

One - High speed drilling attach.
One - Drive unit
One - 1/2" drill
One - Drill bushing

3rd position

Shave .190"
Counterbore
Ream

One - Shaving fixture
One - Shaving tool
One - Roll rest
One - Combined reamer & counterbore
One - Floating bushing

4th position

Tap in .375"

One - Universal threading attach.
One - Releasing type tap holder
One - 13/16"-24 tap
One - Lead cam
One - guard cam
One - Return cam
One - Bushing

5th position

Cutoff .125"

One - Cutoff tool holder
One - Cutoff tool

SUBSEQUENT OPER.
SIGNED

Tooling sheet for making a part on a six-spindle.

FIGURE 22-15 The multiple-spindle, automatic screw machine makes all cuts simultaneously and then performs the noncutting functions (tool withdrawal, index, bar feed) at high speed.

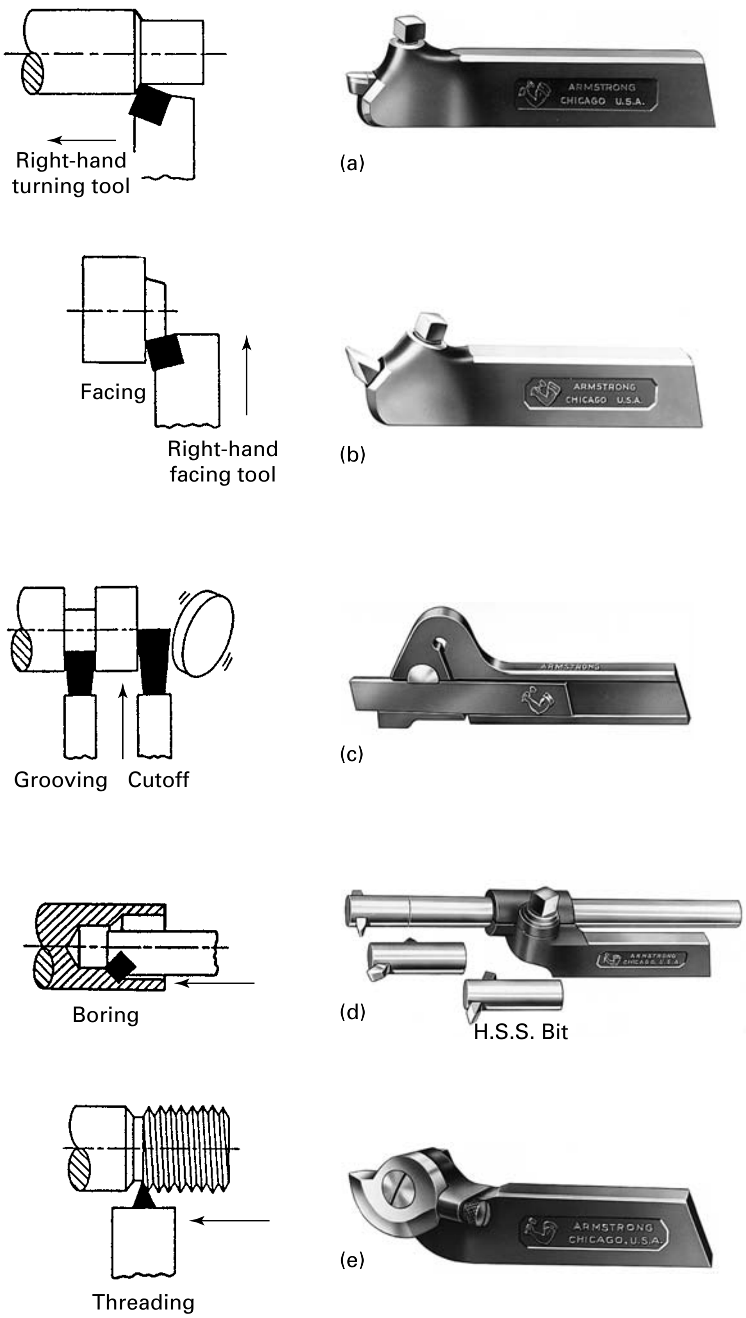

FIGURE 22-16 Common types of forged tool holders: (a) right-hand turning, (b) facing, (c) grooving cutoff, (d) boring, (e) threading. *(Courtesy of Armstrong Brothers Tool Company.)*

angle is of primary importance, particularly when deep cuts are being made. On the round-nose turning tools, cutoff tools, finishing tools, and some threading tools, cutting takes place on or near the tip of the tool, and the back rake is therefore of importance. Such tools are used with relatively light depths of cut.

Because tool materials are expensive, it is desirable to use as little as possible. At the same time, it is essential that the cutting tool be supported in a strong, rigid manner to minimize deflection and possible vibration. Consequently, lathe tools are supported in various types of heavy, forged steel tool holders, as shown in Figure 22-16. The high-speed steel (HSS) tool bit should be clamped in the tool holder with minimum overhang; otherwise tool chatter and a poor surface finish may result.

In the use of carbide, ceramic, or coated carbides for higher speed cutting, throwaway inserts are used that can be purchased in a great variety of shapes, geometrics (nose radius, tool angles, and groove geometry), and sizes (see Figure 22-17 for some examples).

Insert shape	Available cutting edges	Typical insert holder
Round 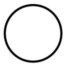	4–10 on a side 8–20 total	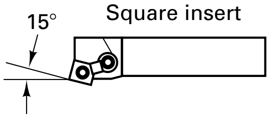
80°/100° diamond 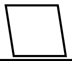	4 on a side 8 total	
Square 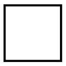	4 on a side 8 total	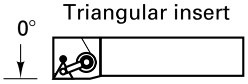
Triangle 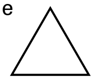	3 on a side 6 total	
55° diamond 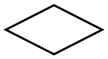	2 on a side 4 total	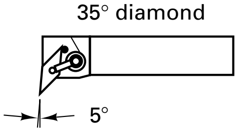
35° diamond 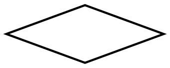	2 on a side 4 total	

FIGURE 22-17 Typical insert shapes, available cutting edges per insert, and insert holders for throwaway insert cutting tools. *(Adapted from* Turning Handbook of High Efficiency Metal Cutting*, courtesy of General Electric Company.)*

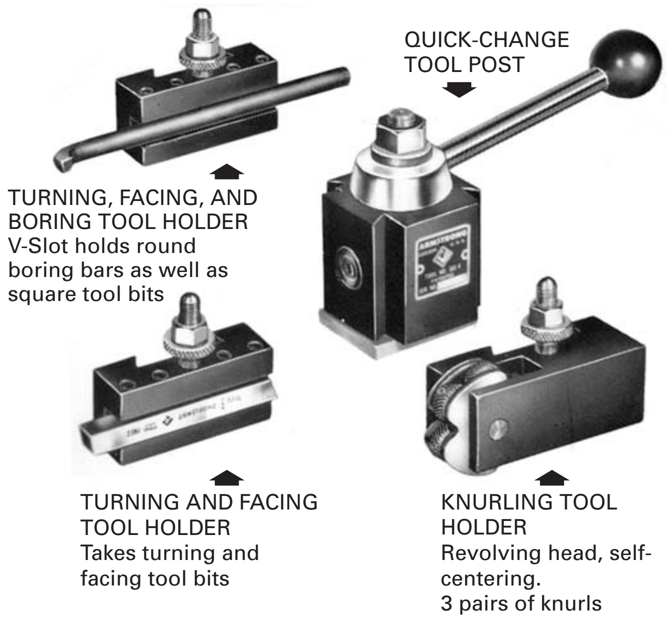

FIGURE 22-18 Quick-change tool post and accompanying toolholders. *(Courtesy of Armstrong Brothers Tool Company.)*

When several different operations on a lathe are performed repeatedly in sequence, the time required for changing and setting tools may constitute as much as 50% of the total cycle time. Quick-change tool holders (Figure 22-18) are used to reduce manual tool-changing time. The individual tools, preset in their holders, can be interchanged in the special tool post in a few seconds. With some systems, a second tool may be set in the tool post while a cut is being made with the first tool and can then be brought into proper position by rotating the post.

In lathe work, the nose of the tool should be set exactly at the same height as the axis of rotation of the work. However, because any setting below the axis causes the work to tend to "climb" up on the tool, most machinists set their tools a few thousandths of an inch above the axis, except for cutoff, threading, and some facing operations.

Form turning

FIGURE 22-19 Circular and block types of form tools. *(Courtesy of Speedi Tool Company, Incorporated.)*

FORM TOOLS

In Figure 22-15, the use of form tools was shown in automatic lathe work. Form tools are made by grinding the inverse of the desired work contour into a block of HSS or tool steel. A threading tool is often a form tool. Although form tools are relatively expensive to manufacture, it is possible to machine a fairly complex surface with a single inward feeding of one tool. For mass-production work, adjustable form tools of either flat or rotary types, such as are shown in Figure 22-19, are used. These are expensive to make initially but can be resharpened by merely grinding a small amount off the face and then raising or rotating the cutting edge to the correct position.

The use of form tools is limited by the difficulty of grinding adequate rake angles for all points along the cutting edge. A rigid setup is needed to resist the large cutting forces that develop with these tools. Light feeds with sharp, coated HSS tools are used on multiple-spindle automatics, turret lathes, and transfer line machines.

TURRET-LATHE TOOLS

In turret lathes, the work is generally held in collets and the correct amount of bar stock is fed into the machine to make one part. The tools are arranged in sequence at the tool stations with depths of cut all preset. The following factors should be considered when setting up a turret lathe.

1. *Setup time*: time required to install and set the tooling and set the stops. Standard tool holders and tools should be used as much as possible to minimize setup time. Setup time can be greatly reduced by eliminating adjustment in the setup.
2. *Workholding time:* time to load and unload parts and/or stock.
3. *Machine-controlling time:* time required to manipulate the turrets. Can be reduced by combining operations where possible. Dependent on the sequence of operations established by the design of the setup.
4. *Cutting time:* time during which chips are being produced. Should be as short as is economically practical and represent the greatest percentage of the total cycle time possible.
5. *Cost:* cost of the tool, setup labor cost, lathe operator labor cost, and the number of pieces to be made.

There are essentially eleven tooling stations, as shown in Figure 22-20, with six in the turret, four in the indexable tool post, and one in the rear tool post. The tooling is more rugged in turret lathes because heavy, simultaneous cuts are often made. Tools mounted in the hex turret that are used for turning are often equipped with pressure rollers set on the opposite side of the rotating workpiece from the tool to counter the cutting forces.

Turret lathes are most economical in producing lots too large for engine lathes but too small for automatic screw machines or automatic lathes. In recent years much of this work has been assumed by numerical control lathes or turning centers. For example, the component (threaded shaft) shown in Figure 22-20 could have also been made on an NC turret lathe with some savings in cycle time.

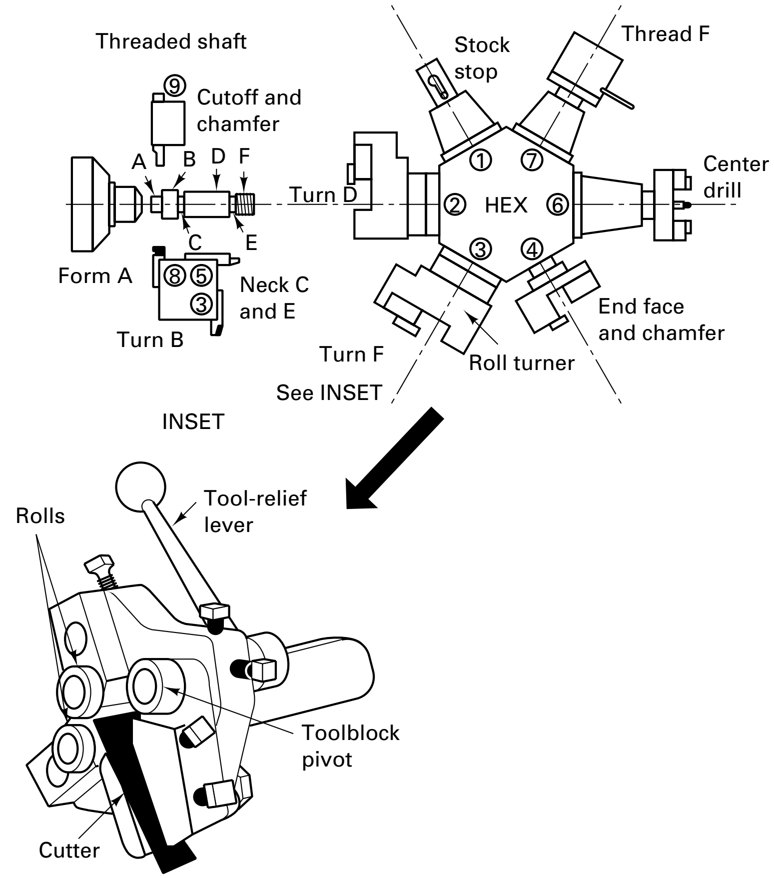

Roller turner has rolls to support the work against the cutting forces

FIGURE 22-20 Turret-lathe tooling setup for producing part shown. Numbers in circles indicate the sequence of the operations from 1 to 9. The letters A through F refer to the surfaces being machined. Operation 3 is a combined operation. The roll turner is turning surface F while tool 3 on the square post is turning surface B. The first operation stops the stock at the right length. The last operation cuts the finished bar off and puts a chamfer on the bar, which will next be advanced to the stock stop.

■ 22.5 WORKHOLDING IN LATHES

WORKHOLDING DEVICES FOR LATHES

Five methods are commonly used for supporting workpieces in lathes:

1. Held between centers
2. Held in a chuck
3. Held in a collet
4. Mounted on a faceplate
5. Mounted on the carriage

In the first four of these methods, the workpiece is rotated during machining. In the fifth method, which is not used extensively, the tool rotates while the workpiece is fed into the tool.

A general discussion of workholding devices is found in Chapter 25, and the student involved in designing working devices should study the reference materials under *Tool Design*. For lathes, workholding is a matter of selecting from standard tooling.

LATHE CENTERS

Workpieces that are relatively long with respect to their diameters are usually machined between centers. See Figure 22-21. Two *lathe centers* are used, one in the spindle hole and the other in the hole in the tailstock quill. Two types are used, called *dead* and *live*. Dead centers are *solid*, that is, made of hardened steel with a Morse taper on one end so that it will fit into the spindle hole. The other end is ground to a taper. Sometimes the tip of this taper is made of tungsten carbide to provide better wear resistance. Before a center

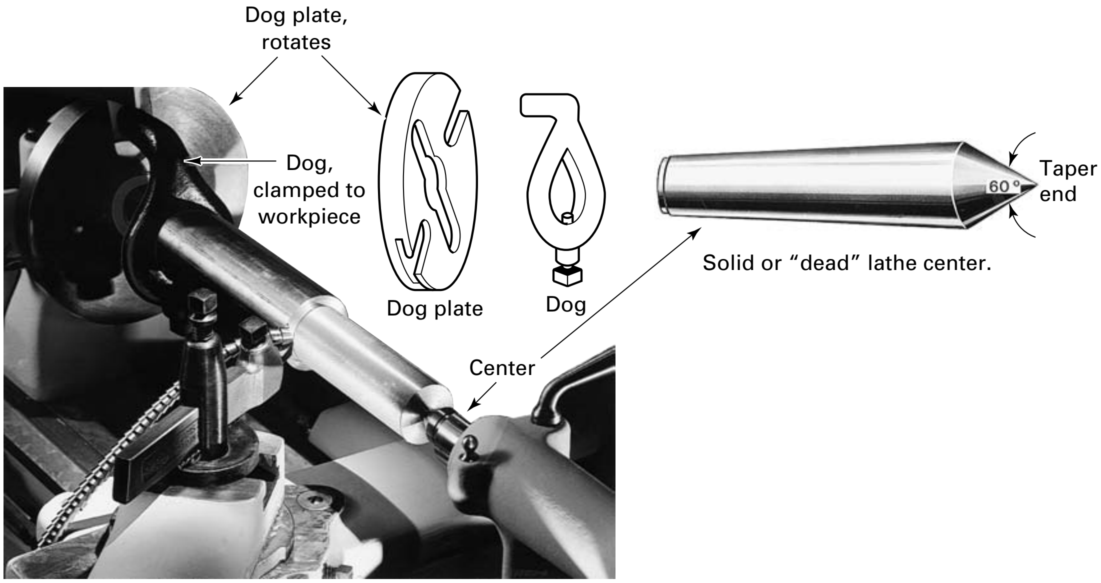

FIGURE 22-21 Work being turned between centers in a lathe, showing the use of a dog and dog plate. *(Courtesy of South Bend Lathe.)*

FIGURE 22-22 Live lathe center can rotate with the part.

is placed in position, the spindle hole should be carefully wiped clean. The presence of foreign material will prevent the center from seating properly, and it will not be aligned accurately.

Live centers are shown in Figure 22-22. A mechanical connection must be provided between the spindle and the workpiece to provide rotation. This is accomplished by a *lathe dog* and *dog plate*. The dog is clamped to the work. The *tail* of the dog enters a slot in the dog plate, which is attached to the lathe spindle in the same manner as a lathe chuck. For work that has a finished surface, a piece of soft metal, such as copper or aluminum, can be placed between the work and the dog setscrew clamp to avoid marring. Live centers are designed so that the end that fits into the workpiece is mounted on ball or roller bearings. It is free to rotate. No lubrication is required. Live centers may not be as accurate as the solid type and therefore are not often used for precision work.

Before a workpiece can be mounted between lathe centers, a center hole must be drilled in each end. This is typically done in a drill press or on the lathe with a tool held in the rear turret. A combination center drill and countersink ordinarily is used, with care taken that the center hole is deep enough so that it will not be machined away in any facing operation and yet is not drilled to the full depth of the tapered portion of the center drill (see Chapter 23).

Because the work and the center of the headstock end rotate together, no lubricant is needed in the center hole at this end. The center in the tailstock quill does not rotate; adequate lubrication must be provided. A mixture of white lead and oil is often used. Failure to provide proper lubrication at all times will result in scoring of the workpiece center hole and the center, and inaccuracy and serious damage may occur. Live centers are often used in the tailstock to overcome these problems.

The workpiece must rotate freely, yet no looseness should exist. Looseness will usually be manifested in chattering of the workpiece during cutting. The setting of the centers should be checked after cutting for a short time. Heating and thermal expansion of the workpiece will reduce the clearances in the setup.

MANDRELS

Workpieces that must be machined on both ends or are disk-shaped are often mounted on *mandrels* for turning between centers. Three common types of mandrels are shown in Figure 22-23. *Solid mandrels* usually vary from 4 to 12 in. in length and are accurately ground with a 1:2000 taper (0.006 in./ft). After the workpiece is drilled and/or bored, it is pressed on the mandrel. The mandrel should be mounted between centers so that the

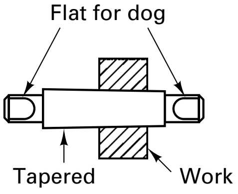

Plain solid mandrel

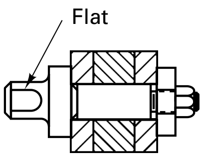

Gang mandrel

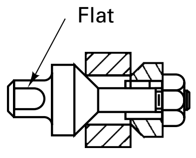

Cone mandrel

FIGURE 22-23 Three types of mandrels, which are mounted between centers for lathe work.

cutting force tends to tighten the work on the mandrel taper. Solid mandrels permit the work to be machined on both ends as well as on the cylindrical surface. They are available in stock sizes but can be made to any desired size.

Gang (or disk) mandrels are used for production work because the workpieces do not have to be pressed on and thus can be put in position and removed more rapidly. However, only the cylindrical surface of the workpiece can be machined when this type of mandrel is used. *Cone mandrels* have the advantage that they can be used to center workpieces having a range of hole sizes.

LATHE CHUCKS

Lathe chucks are used to support a wider variety of workpiece shapes and to permit more operations to be performed than can be accomplished when the work is held between centers. Two basic types of chucks are used (Figure 22-24).

Three-jaw self-centering chucks are used for work that has a round or hexagonal cross section. The three jaws are moved inward or outward simultaneously by the rotation of a spiral cam, which is operated by means of a special wrench through a bevel gear. If they are not abused, these chucks will provide automatic centering to within about 0.001 in. However, they can be damaged through use and will then be considerably less accurate.

Each jaw in a *four-jaw independent chuck* can be moved inward and outward independent of the others by means of a chuck wrench. Thus they can be used to support a wide variety of work shapes. A series of concentric circles engraved on the chuck face aid in adjusting the jaws to fit a given workpiece. Four-jaw chucks are heavier and more rugged than the three-jaw type, and because undue pressure on one jaw does not destroy the accuracy of the chuck, they should be used for all heavy work. The jaws on both three- and four-jaw chucks can be reversed to facilitate gripping either the inside or the outside of workpieces.

Combination four-jaw chucks are available in which each jaw can be moved independently or can be moved simultaneously by means of a spiral cam. Two-jaw chucks are also available. For mass-production work, special chucks are often used in which the jaws are actuated by air or hydraulic pressure, permitting very rapid clamping of

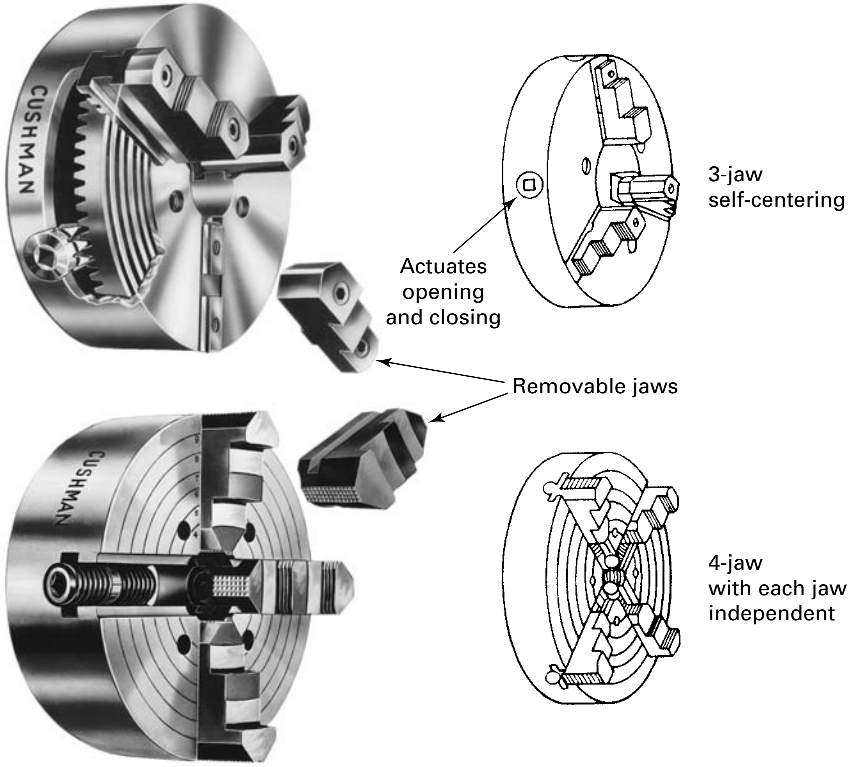

FIGURE 22-24 The jaws on chucks for lathes (four-jaw independent or three-jaw self-centering) can be removed and reversed.

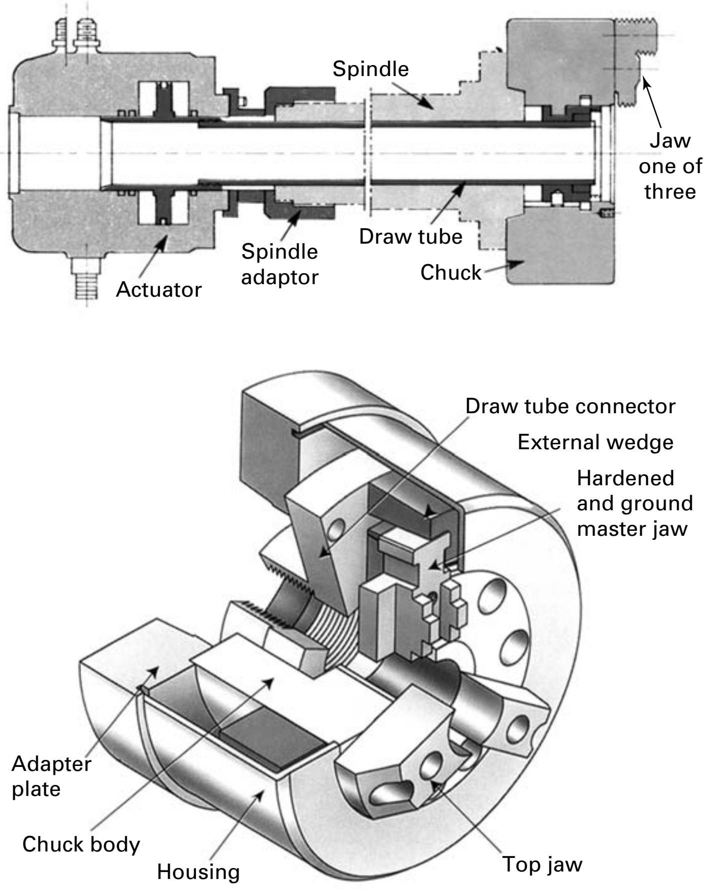

FIGURE 22-25 Hydraulically actuated through-hole three-jaw power chuck shown in section view to left and in the spindle of the lathe above connected to the actuator.

the work. See Figure 22-25 for a schematic. The rapid exchange of tooling is a key manufacturing strategy in manufacturing cells. Chuck jaw sets are dedicated and customized for specific parts. The first time a chuck jaw set is used, each jaw is marked with the number of the jaw slot where it was installed and an index mark that corresponds with the alignment of the jaw serrations and the first tooth on the chuck master jaw. The jaws can now be reinstalled on the chuck exactly where they were bored. The adjustability of the chuck body lets the operator dial in part concentrically without resetting the jaw.

COLLETS

Collets are used to hold smooth cold-rolled bar stock or machined workpieces more accurately than with regular chucks. As shown in Figure 22-26, collets are relatively thin tubular steel bushings that are split into three longitudinal segments over about two-thirds of their length. At the split end, the smooth internal surface is shaped to fit the piece of stock that is to be held. The external surface of the collet is a taper that mates with an internal taper of a collet sleeve that fits into the lathe spindle. When the collet is pulled inward into the spindle (by means of the draw bar), the action of the two mating tapers squeezes the collet segments together, causing them to grip the workpiece.

Collets are made to fit a variety of symmetrical shapes. If the stock surface is smooth and accurate, good collets will provide very accurate centering, with runout less than 0.0005 in. However, the work should be no more than 0.002 in. larger or 0.005 in. smaller than the nominal size of the collet. Consequently, collets are used only on drill-rod, cold-rolled, extruded, or previously machined stock.

Collets that can open automatically and feed bar stock forward to a stop mechanism are commonly used on automatic lathes and turret lathes. An example of a collet chuck is shown in Figure 22-27. Another type of collet similar to a Jacobs drill chuck has a greater size range than ordinary collets; therefore, fewer are required.

FIGURE 22-26 Several types of lathe collets. *(Courtesy of South Bend Lathe.)*

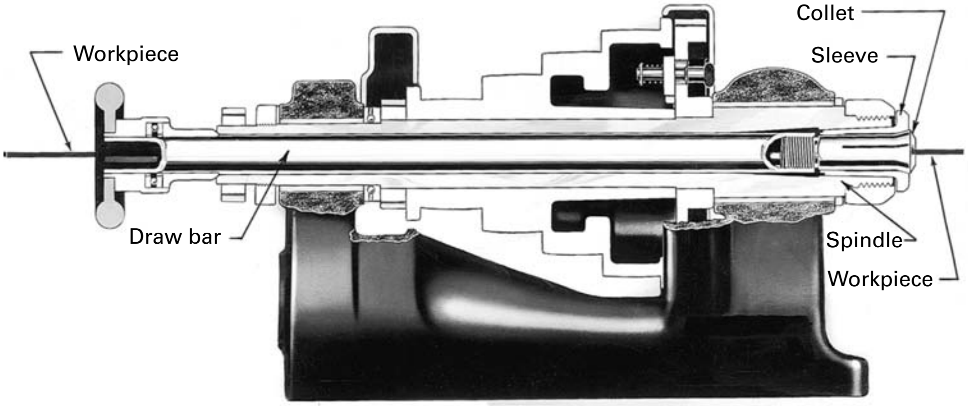

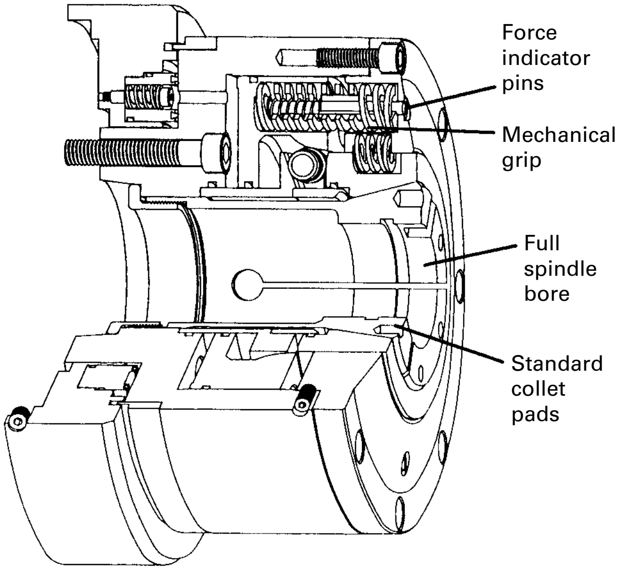

FIGURE 22-27 (a) Method of using a draw-in collet in lathe spindle. *(Courtesy of South Bend Lathe.)*
(b) Schematic of a collet chuck in which the clamping force can be adjusted.

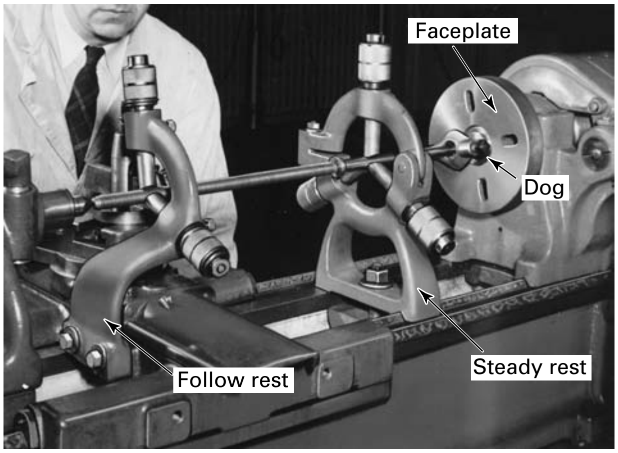

FIGURE 22-28 Cutting a thread on a long, slender workpiece, using a follow rest (left) and a steady rest (right) on an engine lathe. Note the use of a dog and face plate to drive the workpiece. *(Courtesy of South Bend Lathe.)*

FACEPLATES

Faceplates are used to support irregularly shaped work that cannot be gripped easily in chucks or collets. The work can be bolted or clamped directly on the faceplate or can be supported on an auxiliary fixture that is attached to the faceplate. The latter procedure is time saving when identical pieces are to be machined.

MOUNTING WORK ON THE CARRIAGE

When no other means is available, boring occasionally is done on a lathe by mounting the work on the carriage, with the boring bar mounted between centers and driven by means of a dog.

STEADY AND FOLLOW RESTS

If one attempts to turn a long, slender piece between centers, the radial force exerted by the cutting tool or the weight of the workpiece itself may cause it to be deflected out of line. Steady rests and follow rests (Figure 22-28) provide a means for supporting such work between the headstock and the tailstock. The steady rest is clamped to the lathe ways and has three movable fingers that are adjusted to contact the work and align it. A light cut should be taken before adjusting the fingers to provide a smooth contact-surface area.

A steady rest also can be used in place of the tailstock as a means of supporting the end of long pieces, pieces having too large an internal hole to permit using a regular dead center, or work where the end must be open for boring. In such cases the headstock end of the work must be held in a chuck to prevent longitudinal movement. Tool feed should be toward the headstock.

The follow rest is bolted to the lathe carriage. It has two contact fingers that are adjusted to bear against the workpiece, opposite the cutting tool, in order to prevent the work from being deflected away from the cutting tool by the cutting forces.

■ Key Words

apron
automatic lathe
bed
boring
carriage
chucks
collets
cutoff
cutting tools
depth of cut
dog
drilling
engine lathe
faceplates
facing
feed
follow rest
headstock
knurling
lathe centers
mandrels
metal removal rate
milling
parting
quill
reaming
screw machine
steady rest
tailstock
taper turning
turning
turret lathe
workholding

Review Questions

1. How is the tool–work relationship in turning different from that in facing?
2. What different kinds of surfaces can be produced by turning versus facing?
3. How does form turning differ from ordinary turning?
4. What is the basic difference between facing and a cutoff operation?
5. Which machining operations shown in Figure 22-2 do not form a chip?
6. Why is it difficult to make heavy cuts if a form turning tool is complex in shape?
7. Show how equation 22-5 is an approximate equation.
8. Why is the spindle of the lathe hollow?
9. What function does a lathe carriage have?
10. Why is feed specified for a boring operation typically less than that specified for turning if the MRR equations are the same?
11. What function is provided by the leadscrew on a lathe that is not provided by the feed rod?
12. How can work be held and supported in a lathe?
13. How is a workpiece that is mounted between centers on a lathe driven (rotated)?
14. What will happen to the workpiece when turned, if held between centers, and the centers are not exactly in line?
15. Why is it not advisable to hold hot-rolled steel stock in a collet?
16. How does a steady rest differ from a follow rest?
17. What are the advantages and disadvantages of a four-jaw independent chuck versus a three-jaw chuck?
18. Why should the distance a lathe tool projects from the tool holder be minimized?
19. What is the difference between a ram- and a saddle-turret lathe?
20. How can a tapered part be turned on a lathe?
21. Why might it be desirable to use a heavy depth of cut and a light feed at a given speed in turning rather than the opposite?
22. If the rpm for a facing cut (assuming given work and tool materials) is being held constant, what is happening during the cut to the speed? To the feed?
23. Why is it usually necessary to take relatively light feeds and depths of cut when boring on a lathe?
24. How does the corner radius of the tool influence the surface roughness?
25. What effect does a BUE have on the diameter of the workpiece in turning?
26. How does the multiple-spindle screw machine differ from the single-spindle machine?
27. Why does boring ensure concentricity between the hole axis and the axis of rotation of the workpiece (for boring tool), whereas drilling does not?
28. Why are vertical spindle machines better suited for machining large workpieces than horizontal lathes?
29. What is the principal advantage of a horizontal boring machine over a vertical boring machine for large workpieces?
30. In which figures in this chapter is a workpiece being held in a three-jaw chuck?
31. How is the workpiece in Figure 22-14 being held?
32. In which figures in this chapter is a dead center shown?
33. In which figures in this chapter is a live center shown?
34. In which figures in this chapter showing setups do you find the following being used as a workholding device?
    a. Three-jaw chuck
    b. Collet
    c. Faceplate
    d. Four-jaw chuck
35. How many form tools are being utilized in the process shown in Figure 22-15 to machine the part?
36. From the information given in Figure 22-20, start with a piece of round bar stock and show how it progresses, operation by operation, into a finished part—a threaded shaft.

Problems

1. A cutting speed of 100 sfpm has been selected for a turning cut. At what rpm should a 3-in.-diameter bar be rotated?
2. Assume that the workpiece in Problem 1 is 8 in. (203.2 mm) long and a feed of 0.020 in. (0.51 mm) per revolution is used. What is the machining time for a cut across its entire length? Don't forget to add an allowance.
3. If the depth of cut in Problem 2 is 0.25 in., what is the metal removal rate (MRR) exactly? What is the MRR approximately?
4. Using the same recommended cutting speeds and feeds, calculate the machining time to cut off the bar in Problem 2.
5. The following data apply for machining a part on a turret lathe and on an engine lathe:

	Engine Lathe	Turret Lathe
Times, in minutes, to machine part	30 min	5 min
Cost of special tooling	0	$300
Time to set up the machine	30 min	3 hr
Labor rates	$8/hr	$8/hr
Machine rates (overhead)	$10/hr	$12/hr

   a. How many pieces would have to be made for the cost of the engine lathe to just equal the cost of the turret lathe? This is the BEQ.
   b. What is the cost per unit at the BEQ?
6. A finish cut for a length of 10 in. on a diameter of 3 in. is to be taken in 1020 steel with a speed of 100 fpm and a feed of 0.005 ipr. What is the machining time?
7. A workpiece 10 in. in diameter is to be faced down to a diameter of 2 in. on the right end. The CNC lathe (see Chapter 26) controls the spindle speed and maintains the cutting speed at 100 fpm throughout the cut by changing the rpm. What should be the time for the cut? Now suppose the spindle rpm for the workpiece is set to give a speed of 100 fpm for the 10-in. diameter and is not changed during the cut. What is the machining time for the cut now? The feed rate is 0.005 ipr.
8. A hole 89 mm in diameter is to be drilled and bored through a piece of 1340 steel that is 200 mm long, using a horizontal boring, drilling, and milling machine. High-speed tools will be used. The sequence of operations will be center drilling; drilling with an 18-mm drill followed by a 76-mm drill; then boring to size in one cut, using a feed of 0.50 mm/rev. Drilling feeds will be 0.25 mm/rev for the smaller drill and 0.64 mm/rev for the

larger drill. The center drilling operation requires 0.5 min. To set or change any given tool and set the proper machine speed and feed requires 1 min. Select the initial cutting speeds, and compute the total time required for doing the job. (Neglect setup time for the fixture.) This is often referred to as the run time or the cycle time. (*Hint:* Check in Chapter 21 for recommended speeds for turning.)

9. Figure 22-A shows the fixed and variable costs for a part being produced on an engine lathe. Figure 22-B has three plots of unit production cost ($/unit) versus production volume (Q = build quantity). (Note that this plot is made on log-log paper.) Cost per unit for a particular process decreases with increased volume as fixed costs are spread out over more units. For a particular process there is no minimum cost but rather production volumes within which particular processes are most economical.

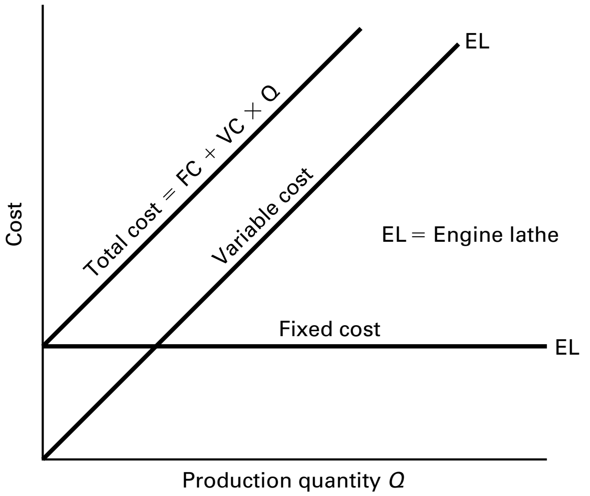

FIGURE 22-A

   a. Each of these curves is a plot of the equation for total cost divided by quantity, which means each is the sum of the fixed cost per unit (mainly setup and tooling costs) and the variable costs per unit (direct labor, direct material). From the data on the plots, estimate the fixed costs for the engine lathe, the NC lathe, and the single-spindle automatic.
   b. For what build quantities is the NC lathe most economical (approximately)?
   c. What cost per unit does the NC lathe approach as the build quantity becomes very large?
   d. Explain how to go from a cost vs. quantity plot to a cost/unit vs. quantity plot?
   e. What happens to these plots if you plot them on regular Cartesian coordinates? Try it and comment on what you find.
   f. Many Japanese manufacturers have found innovative ways to eliminate setup time in many of their processes. What is the impact of this on these kinds of plots, on cost per unit economics, and on job shop inventories?

10. The derivation of the approximate equation 22-5 for the MRR for turning process requires an assumption regarding the diameters of the parts being turned. Determine the error in the equation for Problem 3. What is the assumption?

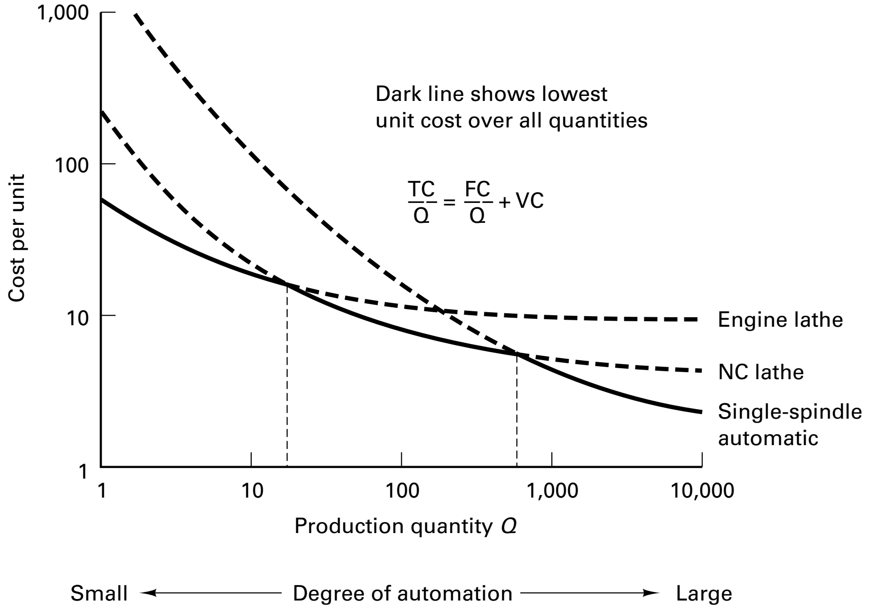

FIGURE 22-B

Chapter 22 CASE STUDY

Estimating the Machining Time for Turning

As the plant manufacturing engineer at **BRC**, Inc., Jay Strom has been called into the production department to provide an expert opinion on a machining problem. Unfortunately, the only tool or instrument you have available at the time is a 1-inch micrometer.

Katrin Zachary, the production manager, would like to know the minimum time required to machine a large forging. The 8-foot-long forging is to be turned down from an original diameter of 10 in. to a final diameter of 6 in. The forging has a BHN of 300 to 400. The turning is to be performed on a heavy-duty lathe, which is equipped with a 50 HP motor and a continuously variable speed drive on the spindle. The work will be held between centers, and the overall efficiency of the lathe has been determined to be 75%. See **Chapter 21**.

The forging (or log) is made from medium-carbon, 4345 alloy steel. The steel manufacturer, some basic experimentation, and established knowledge of the product and its manufacture have provided the following information:

1. A tool-life equation developed for the most suitable type of tool material at a feed of 0.020 ipr and a rake angle of $\alpha = 10$ degrees. The equation $VT^n = C$ generally fits the data, with V = cutting speed and T = the time in minutes to tool failure. Two test cuts were run, one at $V = 60$ sfpm where $T = 100$ minutes and another at $V = 85$ sfpm, where $T = 10$ minutes.
2. According to the vendor, the dynamic shear strength of the material is on the order of 125,000 psi.
3. Jay decides to make two test cuts at the standard feed of 0.020 ipr. He assumes that the chip thickness ratio varies almost linearly between the speeds of 20 and 80 fpm, the values being 0.4 at the speed of 20 fpm and 0.6 at 80 fpm. The chip thickness values were determined by micrometer measurement in order to determine the value of r_C.
4. The machined forging (log) will be used as a roller in a newspaper press and must be precisely machined. If the log deflects during the cutting more than 0.005 in., the roll will end up barrel-shaped after final grinding and polishing.

How should Jay proceed to estimate the minimum time required to machine this forging, assuming that one finishing pass will be needed when the log has been reduced to 6 in. in diameter? The deflection due to cutting forces must be kept below 0.005 in. at the mid-log location.

You can assume that $F_C \times 0.5 = F_f$ and $F_f \times 0.5 = F_R$ and that F_R causes the deflection.

CHAPTER 23

DRILLING AND RELATED HOLE-MAKING PROCESSES

23.1 INTRODUCTION

In manufacturing it is probable that more holes are produced than any other shape, and a large proportion of these are made by *drilling*. Of all the machining processes performed, drilling makes up about 25%. Consequently, drilling is a very important process. Although drilling appears to be a relatively simple process, it is really a complex process. Most drilling is done with a tool having two cutting edges, or *lips*, as shown in Figure 23-1. This is a twist drill, the most common drill geometry. The cutting edges are at the end of a relatively flexible tool. Cutting action takes place inside the workpiece. The only exit for the chips is the hole that is mostly filled by the drill. Friction between the margin and the hole wall produces heat that is additional to that due to chip formation. The counterflow of the chips in the flutes makes lubrication and cooling difficult. There are four major actions taking place at the point of a drill.

1. A small hole is formed by the web—chips are not cut here in the normal sense.
2. Chips are formed by the rotating lips.

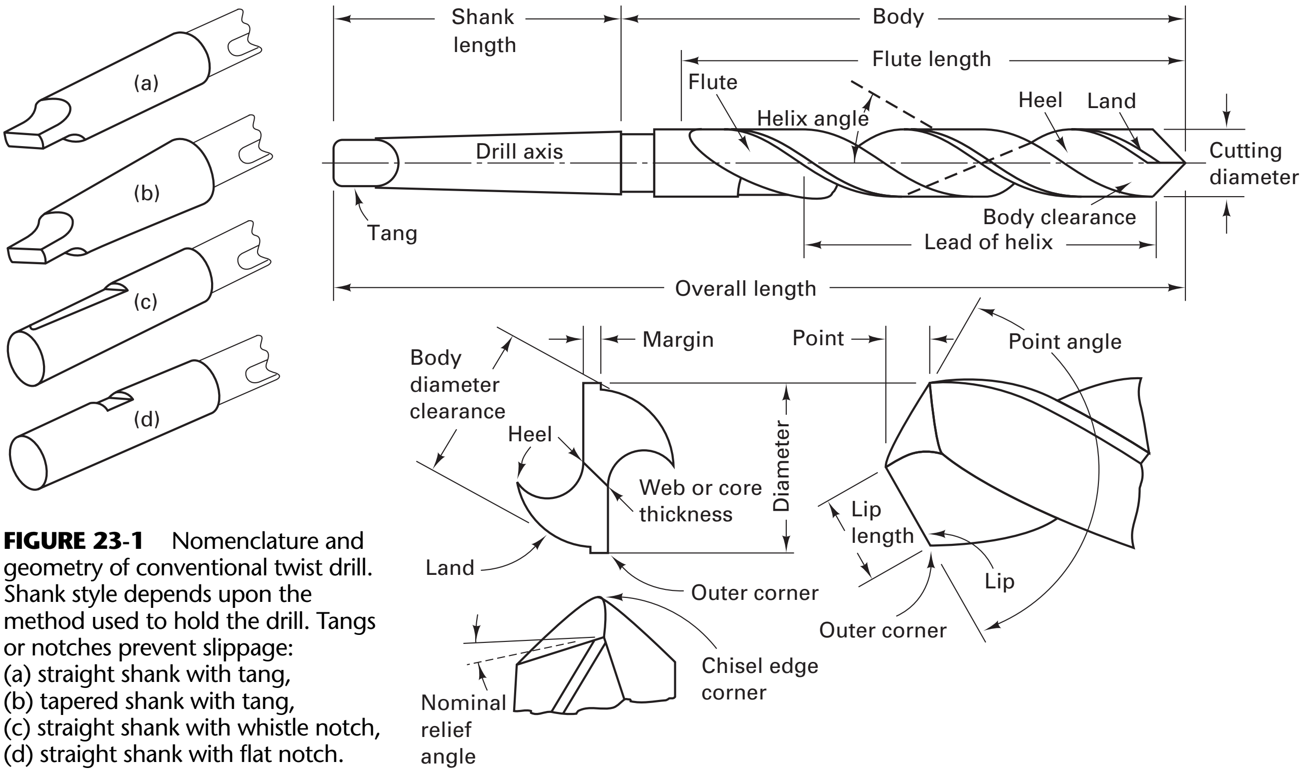

FIGURE 23-1 Nomenclature and geometry of conventional twist drill. Shank style depends upon the method used to hold the drill. Tangs or notches prevent slippage:
(a) straight shank with tang,
(b) tapered shank with tang,
(c) straight shank with whistle notch,
(d) straight shank with flat notch.

3. Chips are removed from the hole by the screw action of the helical flutes.
4. The drill is guided by lands or margins that rub against the walls of the hole.

In recent years, new drill-point geometries and TiN coatings have resulted in improved hole accuracy, longer life, self-centering action, and increased feed-rate capabilities. However, the great majority of drills manufactured are twist drills. One estimate has U.S. manufacturing companies consuming 250 million twist drills per year.

When high-speed steel (HSS) drills wear out, the drill can be reground to restore its original geometry. If regrinding is not done properly, the original drill geometry may be lost, and so will drill accuracy and precision. Drill performance also depends on the drilling machine tool, the workholding device, the drill holder, and the surface of the workpiece. Poor surface conditions (sand pockets and/or chilled hard spots on castings, or hard oxide scale on hot-rolled metal) can accelerate early tool failure and degrade the hole-drilling process.

23.2 Fundamentals of the Drilling Process

The process of drilling creates two chips. A conventional two-flute drill, with drill of diameter D, has two principal cutting edges rotating at an rpm rate of N and feeding axially. The rpm of the drill is established by the selected cutting velocity or cutting speed

$$N_s = \frac{12V}{\pi D} \tag{23-1}$$

with V in surface feet per minute and D in inches (mm). This equation assumes that V is the cutting speed at the outer corner of the cutting lip (point X in Figure 23-2).

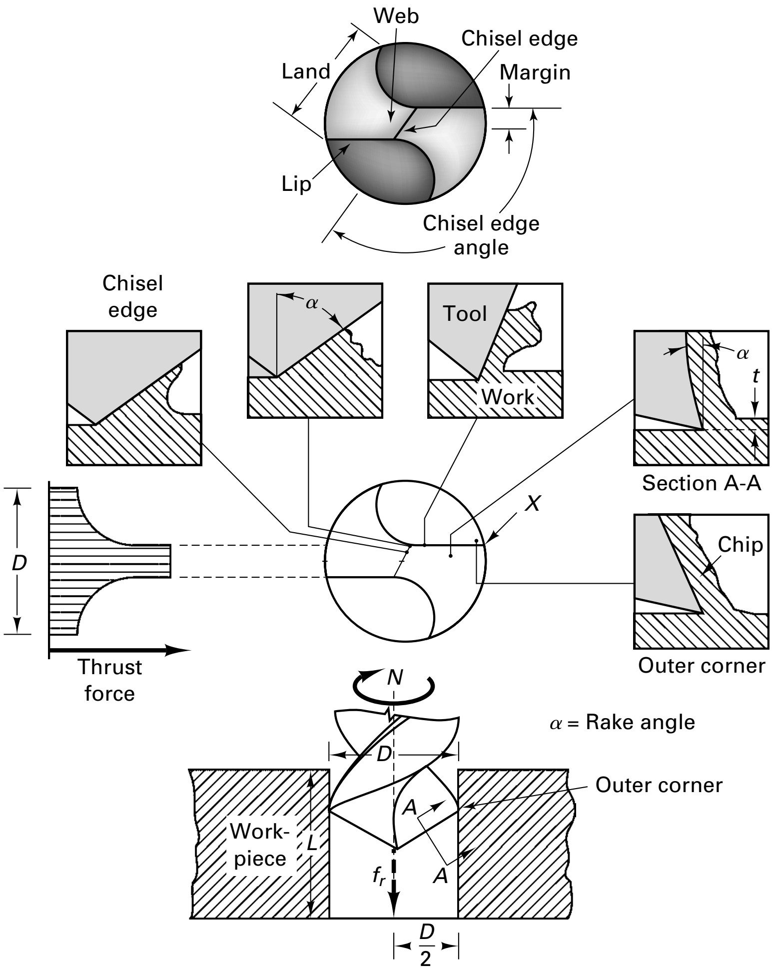

FIGURE 23-2 Conventional drill geometry viewed from the point showing how the rake angle varies from the chisel edge to the outer corner along the lip. The thrust force increases as the web is approached.

The feed, f_r, is given in inches per revolution. The depth of cut in drilling is equal to half the feed rate, or $t = f_r/2$ (see section A–A in Figure 23-2). The feed rate in inches per minute, f_m, is $f_r N_s$. The length of cut in drilling equals the depth of the hole, L, plus an allowance for approach and for the tip of drill, usually $A = D/2$. In drilling, the speed and feed depend upon the material being machined, the cutting tool material, and the size of drill. Table 23-1 gives some typical values for V and for carbide indexable insert drills, a type of drill shown later in the chapter.

After selecting the cutting speed and feed for drilling the hole, the rpm value of the spindle of the machine is determined from equation 23-1, the maximum velocity occurring at the extreme ends of the drill lips. The velocity is very small near the center of the chisel end of the drill. For drilling, cutting time is

$$T_m = \frac{(L + A)}{f_r N_s} = \frac{L + A}{f_m} \tag{23-2}$$

TABLE 23-1 Recommended Speeds and Feeds for Indexable-Insert Drills

Material Group	Size Range	Cutting Speed sfpm	Feed Rate (in./rev.)[a]
Cast iron: modular, ductile, or malleable	$\frac{13}{16}$–$1\frac{1}{8}$	165–300	0.004–0.008
	1–$1\frac{3}{8}$	165–300	0.005–0.010
	$1\frac{1}{4}$–$1\frac{5}{8}$	165–300	0.006–0.012
	$1\frac{1}{2}$–$2\frac{1}{2}$	165–300	0.008–0.014
	$2\frac{3}{8}$–$3\frac{1}{2}$	165–300	0.010–0.015
1000 Series steels like 1081, 1020, etc.	$\frac{13}{16}$–$1\frac{1}{8}$	300–400	0.003–0.005
	1–$1\frac{3}{8}$	350–450	0.003–0.006
	$1\frac{1}{4}$–$1\frac{5}{8}$	400–550	0.004–0.007
	$1\frac{1}{2}$–$2\frac{1}{2}$	450–600	0.004–0.007
	$2\frac{3}{8}$–$3\frac{1}{2}$	500–700	0.005–0.009
Low-carbon unalloyed case-hardening steels	$\frac{13}{16}$–$1\frac{1}{8}$	200–300	0.003–0.005
	1–$1\frac{3}{8}$	250–350	0.004–0.006
	$1\frac{1}{4}$–$1\frac{5}{8}$	300–425	0.005–0.007
	$1\frac{1}{2}$–$2\frac{1}{2}$	330–490	0.005–0.008
	$2\frac{3}{8}$–$3\frac{1}{2}$	350–550	0.006–0.010
High-carbon alloyed heat-treated steels	$\frac{13}{16}$–$1\frac{1}{8}$	200–300	0.003–0.005
	1–$1\frac{3}{8}$	250–325	0.004–0.006
	$1\frac{1}{4}$–$1\frac{5}{8}$	300–400	0.005–0.008
	$1\frac{1}{2}$–$2\frac{1}{2}$	335–450	0.005–0.008
	$2\frac{3}{8}$–$3\frac{1}{2}$	350–500	0.006–0.010
High-tensile steels	$\frac{13}{16}$–$1\frac{1}{8}$	165–250	0.004–0.005
	1–$1\frac{3}{8}$	195–300	0.004–0.006
	$1\frac{1}{4}$–$1\frac{5}{8}$	230–300	0.005–0.007
	$1\frac{1}{2}$–$2\frac{1}{2}$	265–390	0.006–0.008
	$2\frac{3}{8}$–$3\frac{1}{2}$	265–425	0.006–0.009
Stainless steels	$\frac{13}{16}$–$1\frac{1}{8}$	230–280	0.003–0.004
	1–$1\frac{3}{8}$	265–300	0.004–0.005
	$1\frac{1}{4}$–$1\frac{5}{8}$	280–345	0.004–0.005
	$1\frac{1}{2}$–$2\frac{1}{2}$	295–395	0.004–0.005
	$2\frac{3}{8}$–$3\frac{1}{2}$	300–400	0.004–0.006
Titanium steels	$\frac{13}{16}$–$1\frac{1}{8}$	100–135	0.003–0.004
	1–$1\frac{3}{8}$	100–150	0.004–0.007
	$1\frac{1}{4}$–$1\frac{5}{8}$	115–165	0.005–0.008
	$1\frac{1}{2}$–$2\frac{1}{2}$	130–175	0.006–0.009
	$2\frac{3}{8}$–$3\frac{1}{2}$	135–190	0.006–0.010

[a] Ultimate speeds and feeds may differ from recommended speeds and feeds depending on materials, rigidity of machine and setup, workpiece, and depth of cut.

Example of Drilling

A cast iron plate is 2 in. thick and needs 4-in.-diameter holes drilled in it. An indexable-insert drill has been selected. Looking at Table 23-1, we select a cutting speed of 200 fpm and a feed of 0.005 ipr.

The spindle rpm = $12V/\pi D = 12 \times 200 / 3.14 \times 1 = 764$ rpm.

What if the machine does not have this specific rpm? Pick the closest value: Let's say it is 750 rpm.

The penetration rate or feed rate (in./min) = feed (ipr). The rpm = $0.005 \times 750 = 3.75$ in./min. The maximum chip load = feed (ipr)/2 = 0.005/2 = 0.0025in./rev.

What if the machine does not have the specific feed rate? Pick the next lowest value as a starting value. Let's say it is 3.5 in./min.

The material removal rate (in.^{3}/min) = $(\pi/4) \times (D)^2 \times$ feed (ipr) $\times$ rpm = $(\pi/4)\ 1^2 \times$ feed rate = $3.14/4 \times 1^2 \times 3.50 = 2.75$ in.^{3}/min.

The MRR can be used with the unit power for cast iron (see Chapter 20) to estimate the HP needed to drill the hole. Let $HP_s = 0.33$ for this Cl:

$$HP = HP_s \times MRR = 0.33 \times 2.75 = .90$$

This value would typically represent 80% of the total motor horsepower (HP) needed, so in this case, a horsepower motor greater than 1.5 or 2 would be sufficient.

In estimating the cost of a job, it is often necessary to determine the time to drill a hole.

$$\text{drill time/hole} = \frac{\text{length drilled} + \text{allowance}}{\text{feed rate (in./min)}} + \frac{\text{rapid traverse length of withdrawal}}{\text{rapid traverse rate}} + \text{prorated downtime to change drills per hole}$$

The last term prorated downtime is

$$\frac{\text{drill change downtime}}{\text{holes drilled per drill (tool life)}}$$

And the cost/hole is

$$\text{drilling time/holes} \times (\text{labor} + \text{machine rate}) + \text{prorated cost of drill/hole}$$

The metal removal rate is

$$MRR = \frac{\text{volume}}{T_m} = \frac{\pi D^2 L/4}{L/f_r N_s} \text{(omitting allowances)} \qquad (23\text{-}3)$$

which reduces to

$$MRR = (\pi D^2/4) f_r N_s \text{ in.}^3 \qquad (23\text{-}4)$$

Substituting for N with equation 23-1, we obtain an approximate form

$$MRR \cong 3DVf_r \qquad (23\text{-}5)$$

23.3 TYPES OF DRILLS

The most common types of drills are *twist drills*. These have three basic parts: the *body*, the *point*, and the *shank*, shown in Figures 23-1 and 23-2. The body contains two or more spiral or helical grooves, called *flutes*, separated by *lands*. To reduce the friction between the drill and the hole, each land is reduced in diameter except at the leading edge, leaving a narrow *margin* of full diameter to aid in supporting and guiding the drill and thus aiding in obtaining an accurate hole. The lands terminate in the point, with the leading edge of each land forming a cutting edge. The flutes serve as channels through which the chips are withdrawn from the hole and coolant gets to the cutting edges. Although most drills have two flutes, some, as shown in Figure 23-3, have three, and some have only one.

FIGURE 23-3 Types of twist drills and shanks. Bottom to top: Straight-shank, three-flute core drill; straight-shank; taper-shank; bit-shank; straight-shank, high-helix angle; straight-shank, straight-flute; taper-shank, subland drill.

The principal rake angles behind the cutting edges are formed by the relation of the flute *helix angle* to the work. This means that the rake angle of a drill varies along the cutting edges (or lips), being negative close to the point and equal to the helix angle out at the lip. Because the helix angle is built into the twist drill, the primary rake angle cannot be changed by normal grinding. The helix angle of most drills is 24°, but drills with larger helix angles—often more than 30°—are used for materials that can be drilled very rapidly, resulting in a large volume of chips. Helix angles ranging from 0° to 20° are used for soft materials, such as plastics and copper. Straight-flute drills (zero helix and rake angles) are also used for drilling thin sheets of soft materials. It is possible to change the rake angle adjacent to the cutting edge by a special grinding procedure called *dubbing*.

The cone-shaped point on a drill contains the cutting edges and the various clearance angles. This cone angle affects the direction of flow of the chips across the tool face and into the flute. The 118° cone angle that is used most often has been found to provide good cutting conditions and reasonable tool life when drilling mild steel, thus making it suitable for much general-purpose drilling. Smaller cone angles—from 90° to 118°—are sometimes used for drilling more brittle materials, such as gray cast iron and magnesium alloys. Cone angles from 118° to 135° are often used for the more ductile materials, such as aluminum alloys. Cone angles less than 90° frequently are used for drilling plastics. Many methods of grinding drills have been developed that produce point angles other than 118°.

The drill produces a thrust force T and a torque M. Drill torque increases with feed (in./rev) and drill diameter, while the thrust force is influenced greatly by the web or chisel end design, as shown in Figures 23-2 and 23-4.

The relatively thin *web* between the flutes forms a metal column or backbone. If a plain conical point is ground on the drill, the intersection of the web and the cone produces a straight-line *chisel end*, which can be seen in the end view of Figure 23-2. The chisel point, which also must act as a cutting edge, forms a 56° negative rake angle with the conical surface. Such a large negative rake angle does not cut efficiently, causing excessive deformation of the metal. This results in high thrust forces and excessive heat being developed at the point. In addition, the cutting speed at the drill center is low, approaching zero. As a consequence, drill failure on a standard drill occurs both at the center, where the cutting speed is lowest, and at the outer tips of the cutting edges, where the speed is highest.

When the rotating, straight-line chisel point comes in contact with the workpiece, it has a tendency to slide or "walk" along the surface, thus moving the drill away from the desired location. The conventional point drill, when used on machining centers or high-speed automatics, will require additional supporting operations like center drilling, burr removal, and tool change, all of which increase total production time and reduce productivity.

Many special methods of grinding drill points have been developed to eliminate or minimize the difficulties caused by the chisel point and to obtain better cutting action and tool life (see Figure 23-4 for some examples).

The center core or slot-point drill shown in Figure 23-5 has twin carbide tips brazed on a steel shank and a hole (or slot) in the center. The work material in the slot is not machined but, rather, fractured away. The center core drill has a self-centering action and greatly relieves the thrust force produced by the chisel edge of conventional twist drills. This drill operates at about 30 to 50% less thrust than that of

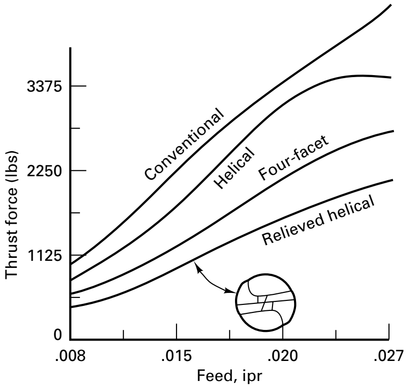

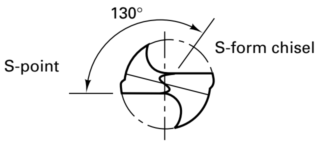

Helical (S-shape chisel point)
Can eliminate center drilling on NC machining centers
Excellent hole geometry
Close relationship between drill size and hole size
Increased tool life
Lower thrust requirements
Leaves burr on breakthrough

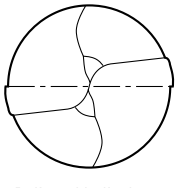

Relieved helical
Reduces thrust force
Eliminates chisel end
Equal, rake angle

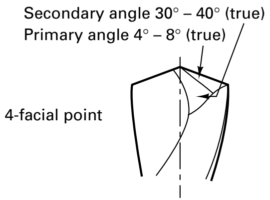

Four-facet
Good self-centering ability
Breaks up chips for deep-hole drilling
Can be generated in a single grinding operation: reduces thrust.
Eliminates center drilling in NC

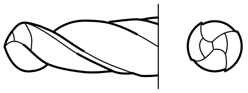

Bickford
Combination of helical and Racon point features
Self-centering and reduced burrs
Excellent hole geometry
Increased tool life

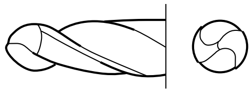

Racon (radiused conventional point)
Increased feed rates
Increased tool life (8–10 times in C.I.)
Reduced burrs at breakthrough
Not self-centering

FIGURE 23-4 As the drill advances, it produces a thrust force. Variations in the drill-point geometry are aimed at reducing the thrust force.

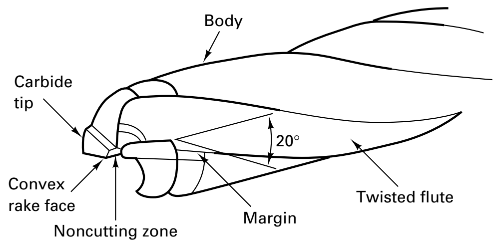

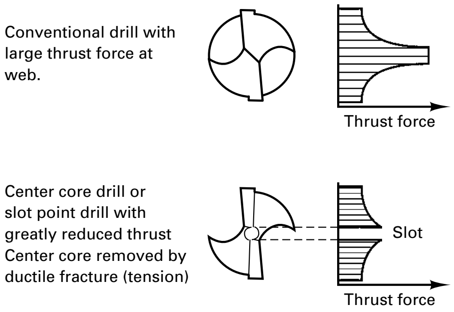

FIGURE 23-5 Center core drills can greatly reduce the thrust force.

conventional drills. All rake angles of the cutting edge are positive, which further reduces the cutting force.

The conventional point also has a tendency to produce a burr on the exit side of a hole. Some type of chip breaker is often incorporated into drills. One procedure is to grind a small groove in the rake face, parallel with and a short distance back from the cutting edge. Drills with a special chip-breaker rib as an integral part of the flute are available. The rib interrupts the flow of the chip, causing it to break into short lengths.

The split-point drill is a form of *web thinning* to shorten the chisel edge. This design reduces thrust and allows for higher feed rates. Web thinning uses a narrow grinding wheel to remove a portion of the web near the point of the drill. Such methods have had varying degrees of success, and they require special drill-grinding equipment.

Also shown in Figure 23-4 is a four-facet self-centering point that works well in tougher materials. The facets refer to the number of edges on the clearance surfaces exposed to the cutting action. The self-centering drill lasts longer and saves machining time on numerical control (NC) centers as they can eliminate the need for center drills. A common aspect in drill-point terminology is total indicator runout (TIR). This is a measure of the cutting lips' relative side-to-side accuracy. The original drill point produced by the manufacturer lasts only until the first regrind; thereafter performance and life depend upon the quality of regrind. Proper regrinding (reconditioning) of a drill is a complex and important operation. If satisfactory cutting and hole size are to be achieved, it is essential that the point angle, lip clearance, lip length, and web thinning be correct. As illustrated in Figure 23-6, incorrect sharpening often results in unbalanced cutting forces at the tip, causing misalignment and oversized holes. Drills, even small drills, should always be machine ground, never hand ground. Drill grinders, often computer controlled, should be used to ensure exact reproduction of the geometry established by the manufacturer of the drill. This is extremely important when drills are used on mass-production or numerically controlled machines. Companies invest huge sums in NC machining centers but overlook the value of a top-quality drill-grinding machine.

Drill shanks are made in several types. The two most common types are the straight and the taper. *Straight-shank* drills are usually used for sizes up to $\frac{3}{8}$-in. diameter and must be held in some type of drill chuck. *Taper shanks* are available on larger drills and are common on drills above 1 in. Morse tapers are used on taper-shank drills, ranging from a number 1 taper to a number 6.

Taper-shank drills are held in a female taper in the end of the machine tool spindle. If the taper on the drill is different from the spindle taper, adapter sleeves are available. The taper assures the drill's being accurately centered in the spindle. The *tang* at the end

FIGURE 23-6 Typical causes of drilling problems.

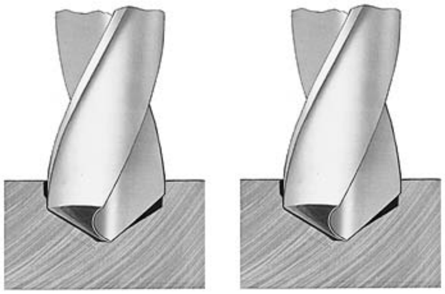

(a) Angle unequal (b) Length unequal

Outer corners break down: Cutting speed too high; hard spots in material; no cutting compound at drill point; flutes clogged with chips

Cutting lips chip: Too much feed; lip relief too great

Checks or cracks in cutting lips: Overheated or too quickly cooled while sharpening or drilling

Chipped margin: Oversize jig bushing

Drill breaks: Point improperly ground; feed too heavy; spring or backlash in drill press, fixture, or work; drill is dull; flutes clogged with chips

Tang breaks: Imperfect fit between taper shank and socket caused by dirt or chips or by burred or badly worn sockets

Drill breaks when drilling brass or wood: Wrong type drill; flutes clogged with chips

Drill spilts up center: Lip relief too small; too much feed

Drill will not enter work: Drill is dull; web too heavy; lip relief too small

Hole rough: Point improperly ground or dull; no cutting compounds at drill point; improper cutting compound; feed too great; fixture not rigid

Hole oversize: Unequal angle of the cutting edges; unequal length of the cutting edges; see part (a)

Chip shape changes while drilling: Dull drill or cutting lips chipped

Large chip coming from one flute, small chip from the other: Point improperly ground, one lip doing all the cutting

of the taper shank fits loosely in a slot at the end of the tapered hole in the spindle. The drill may be loosened for removal by driving a metal wedge, called a *drift*, through a hole in the side of the spindle and against the end of the tang. It also acts as a safety device to prevent the drill from rotating in the spindle hole under heavy loads. However, if the tapers on the drill and in the spindle are proper, no slipping should occur. The driving force to the drill is carried by the friction between the two tapered members. Standard drills are available in four size series, the size indicating the diameter of the drill body:

- *Millimeter series:* 0.01- to 0.50-mm increments, according to size, in diameters from 0.015 mm
- *Numerical series:* no. 80 to no. 1 (0.0135 to 0.228 in.)
- *Lettered series: A* to *Z* (0.234 to 0.413 in.)
- *Factional series:* to 4 in. (and over) by 64ths.

TiN coating of conventional drills greatly improves drilling performance. The increase in tool life of TiN-coated drills over uncoated drills in machining steel is more than 200 to 1000%.

DEPTH-TO-DIAMETER RATIO

The depth of the hole to be drilled divided by the diameter of the drill is the depth-to-diameter ratio. Most machinists consider a ratio of 3 to 1 to be deep-hole drilling, after which hole accuracy (location) drilling speed and tool life will be reduced. The bores of rifle barrels were once drilled using conventional drills. Today, *deep-hole drills*, or *gundrills*, are used when deep holes are to be drilled.

The oldest of these deep-hole techniques is *gundrilling*. The original *gundrills* were very likely half-round drills, drilled axially with a coolant hole to deliver cutting fluids to the cutting edge (see Figure 23-7). Modern gundrills typically consist of an alloy-steel-tubing shank with a solid carbide or carbide-edged tip brazed or mechanically fixed to it. Guide pads following the cutting edge by about 90° to 180° are also standard.

The gundrill is a single-lipped tool, and its major feature is the delivery of coolant through the tool at extremely high pressures—typically from 300 psi to 1800 psi, depending on diameter—to force chips back down the flute. Successful application of a gundrill depends almost entirely on the formation of small chips that can be effectively evacuated by the flow of cutting fluids.

Standard gundrills are made in diameters from 0.0078 in. (2 mm) to 2 in. or more. Depth-to-diameter ratios of 100 to 1 or more are possible.

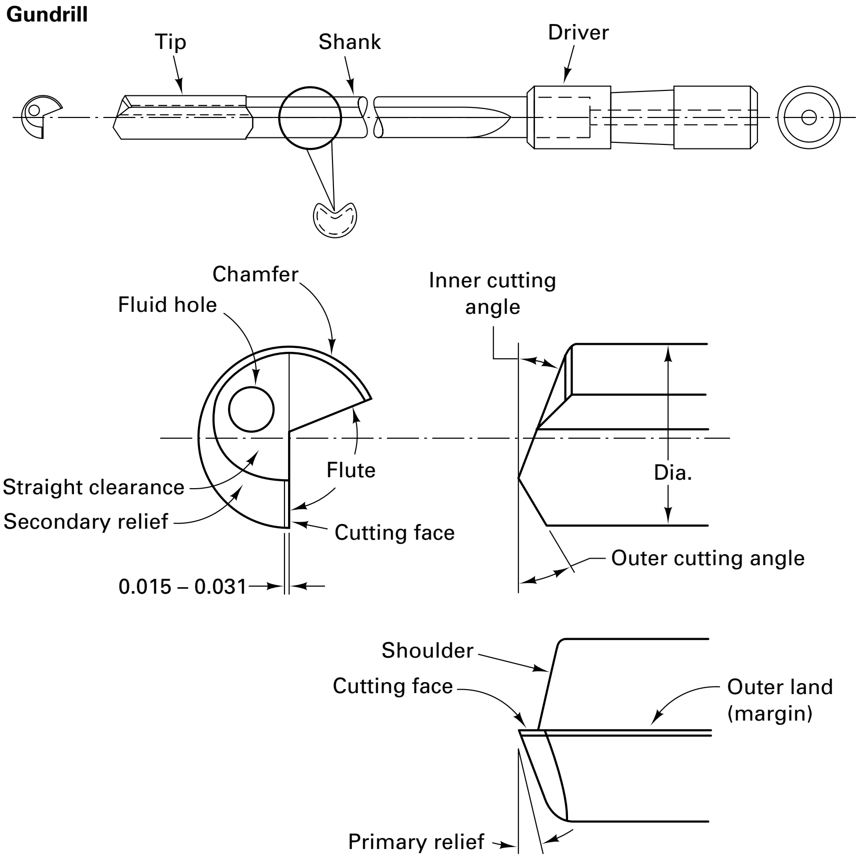

FIGURE 23-7 The gundrill geometry is very different from that of conventional drills.

In gundrilling tolerances for diameters of drilled holes under 1 in. can be held to 0.0005-in. total tolerance, and, should not exceed 0.001 in. over all. According to one source, "roundness accuracies of 0.00008 inch can be attained." Because of the burnishing effect of the guide pads, excellent surface finishes can be produced.

Hole straightness is affected by a number of variables, such as diameter, depth, uniformity of workpiece material, condition of the machine, sharpness of the gundrill, feeds and speeds used, and the specific technique used (rotation of the tool, of the work, or both), but deviation should not exceed about 0.002 in. TIR in a 4-in. depth at any diameter, and it can be held to 0.002 in. per foot.

Basic setup for a gundrilling operation, which is generally horizontal, requires a drill bushing very close to the work entry surface and may involve rotating the work or the tool, or both. Best concentricity and straightness are achieved by the work and the tool rotating in opposite directions.

Other deep-hole drills are called *BTA* (Boring Trepanning Association) *drills* and *ejector drills*. A deep hole is one in which the length (or depth) of the hole is three or more times the diameter. Coolants can be fed internally through these drills to the cutting edges. See Figure 23-8 for schematic of an ejector drill and the machine tool used for gundrilling. The coolants flush the chips out the flutes. The special design of these drills reduces the tendency of the drill to drift, thus producing a more accurately aligned hole. The typical BTA deep-hole drilling tools are designed for single-lip end cutting of a hole in a single pass. Solid-deep-hole drills have alloy-steel shanks with a carbide-edged tip that is fixed to it mechanically. The cutting edge cuts through the center on one side of the hole, leaving no area of material to be extruded. The cutting is done by the outer and inner cutting angles, which meet at a point. Theoretically, the depth of the hole has no limit, but practically, it is restricted by the torsional rigidity of the shank.

Gundrills have a single-lip cutting action. Bearing areas and lifting forces generated by the coolant pressure counteract the radial and tangential loads. The single-lip construction forces the edge to cut in a true circular pattern. The tip thus follows the direction of its own axis. The *trepanning gundrill* leaves a solid core.

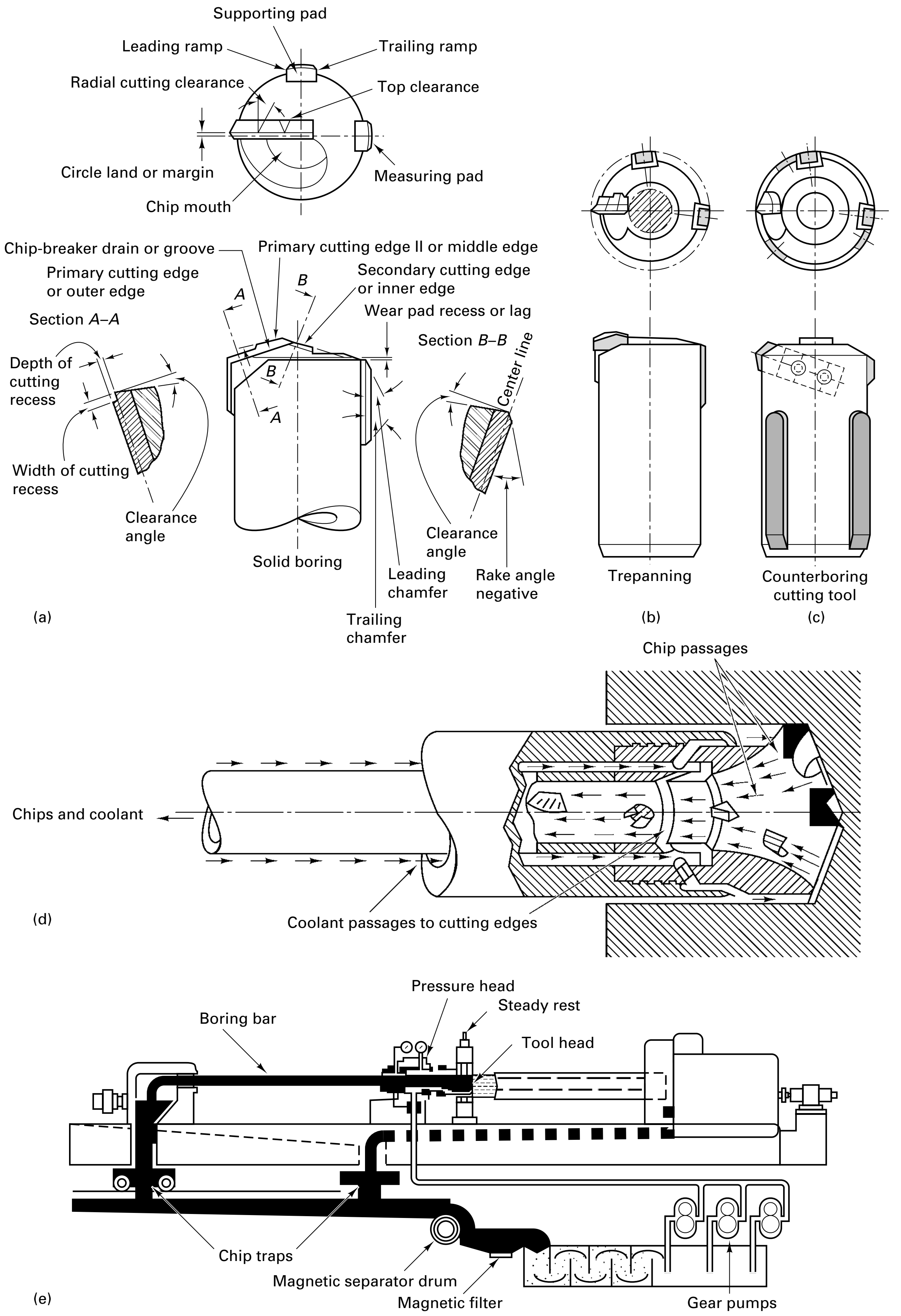

FIGURE 23-8 BTA drills for (a) boring, (b) trepanning, (c) counterboring, (d) deep-hole drilling with ejector drill, (e) horizontal deep-hole-drilling machine. *(S. Azad and S. Chandeashekar,* Mechanical Engineering, *Sept. 1985, pp. 62, 63.)*

TABLE 23-2 Drilling Processes Compared

	Twist Drill	Pivot (micro)	Spade (inserted blade)	Indexable-Insert Drill	Gundrill	BTA System	Ejector Drill	Trepanning
Diameter, in.	0.020–2	0.001–0.020	1–6	$^{5}/_{8}-3$	0.078–1	$^{7}/_{16}-8$	$^{3}/_{4}-2^{1}/_{2}$	$1^{3}/_{4}-10$
Typical range	0.0059	<0.0001	$^{5}/_{8}$ spec, 1	$^{5}/_{8}$	0.039	$^{3}/_{16}$	$^{3}/_{4}$	$1^{3}/_{4}$
Min	$3^{1}/_{2}$ std	$^{1}/_{8}$	std	3	$2^{1}/_{2}$	12	7	>24
Max	6 spec		18					
Depth/Diameter Ratio								
Min. practical	No min	No min	No min	<1	1	1	1	10
Common max[a]	5–10	3–10	>40 (horiz)	2–3	100	100	50	100
Ultimate	>50	20	10 (vert)	—	200	>100	>50	>100
			>100 (horz)					

[a] Maximum depth/diameter ratios in this table are estimates of what can be achieved with special attention and under ideal conditions. Equality of tolerances should not be assumed for the different processes.

Hole straightness is affected by variables such as diameter, depth, uniformity of the workpiece material, condition of the machine, sharpness of cutting edges, feeds and speeds used, and whether the tool or the workpiece is rotated or counterrotated.

Two-flute drills are available that have holes extending throughout the length of each land to permit coolant to be supplied, under pressure, to the point adjacent to each cutting edge. These are helpful in providing cooling and also in promoting chip removal from the hole in drilling to moderate depths. They require special fittings through which the coolant can be supplied to the rotating drill, and they are used primarily on automatic and semiautomatic machines. See Table 23-2 for comparison of drilling processes.

Larger holes in thin material may be made with a *hole cutter* (Figure 23-9), whereby the main hole is produced by the thin-walled, multiple-tooth cutter with saw teeth. Hole cutters are often called *hole saws*.

When starting to drill a hole, a drill can deflect rather easily because of the "walking" action of the chisel point. Hole location accuracy is lost. Consequently, to ensure that a hole is started accurately, a *center drill* (Figure 23-10) is used prior to a regular chisel-point twist drill. The center drill and countersink tool have a short, straight drill section extending beyond a 60° taper portion. The heavy, short body provides rigidity so that a hole can be started with little possibility of tool deflection. The hole should be drilled only partway up on the tapered section of countersink. The conical portion of the hole serves to guide the drill being used to make the main hole. Combination center drills are made in four sizes to provide a starting hole of proper size for any drill. If the drill is sufficiently

FIGURE 23-9 Hole cutter used for thin sheets. *(Courtesy of Armstrong-Blum Manufacturing Company.)*

Step 1 Centering and countersinking with a combination center drill and countersink. *(Courtesy of Chicago-Latrobe)*

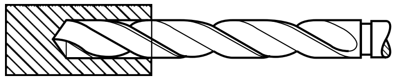

Step 2 Drilling with a standard twist drill.

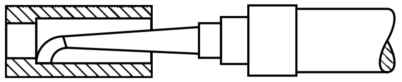

Step 3 Truing hole by boring.

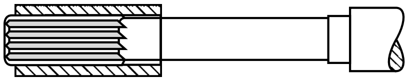

Step 4 Final sizing and finishing with a reamer.

FIGURE 23-10 To obtain a hole that is accurate as to size and aligned on center (located), this four-step sequence of operations is usual.

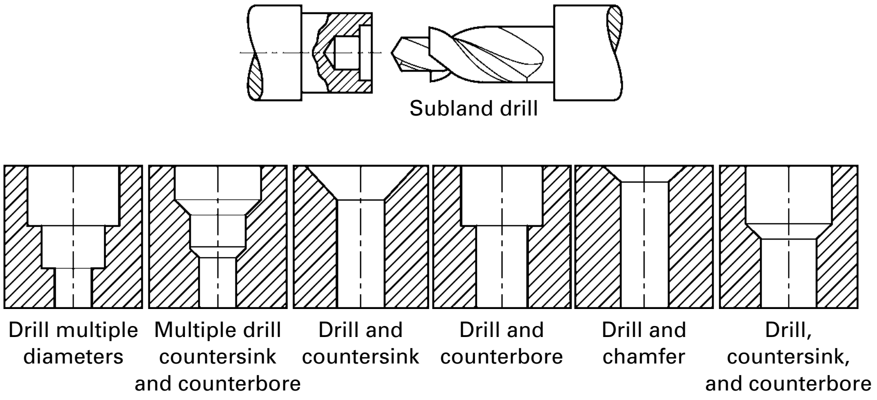

FIGURE 23-11 Special-purpose subland drill (above), and some of the operations possible with other combination drills (below).

large in diameter, or if it is sufficiently short, satisfactory accuracy may often be obtained without center drilling. Special drill holders are available that permit drills to be held with only a very short length protruding.

Because of its flexibility and endpoint geometry, a drill may start or drift off centerline during drilling. The use of a center (start) drill will help to ensure that a drill will start drilling at the desired location. Nonhomogeneities in the workpiece and imperfect drill geometries may also cause the hole to be oversize or off-line. For accuracy, it is necessary to follow center drilling and drilling by boring and reaming. Boring corrects the hole alignment, and reaming brings the hole to accurate size and improves the surface finish.

Special *combination drills* can drill two or more diameters, or drill and countersink and/or counterbore, in a single operation (Figure 23-11). Countersinking and counterboring usually follow drilling. These operations are described in more detail later in this chapter. A *step drill* has a single set of flutes and is ground to two or more diameters. *Subland drills* have a separate set of flutes on a single body for each diameter or operation; they provide better chip flow, and the cutting edges can be ground to give proper cutting conditions for each operation. Combination drills are expensive and may be difficult to regrind but can be economical for production-type operations if they reduce work handling, setups, or separate machines and operations.

Spade drills (Figure 23-12) are widely used for making holes 1 in. or larger in diameter at low speeds or with high feeds (Table 23-3). The workpiece usually has an

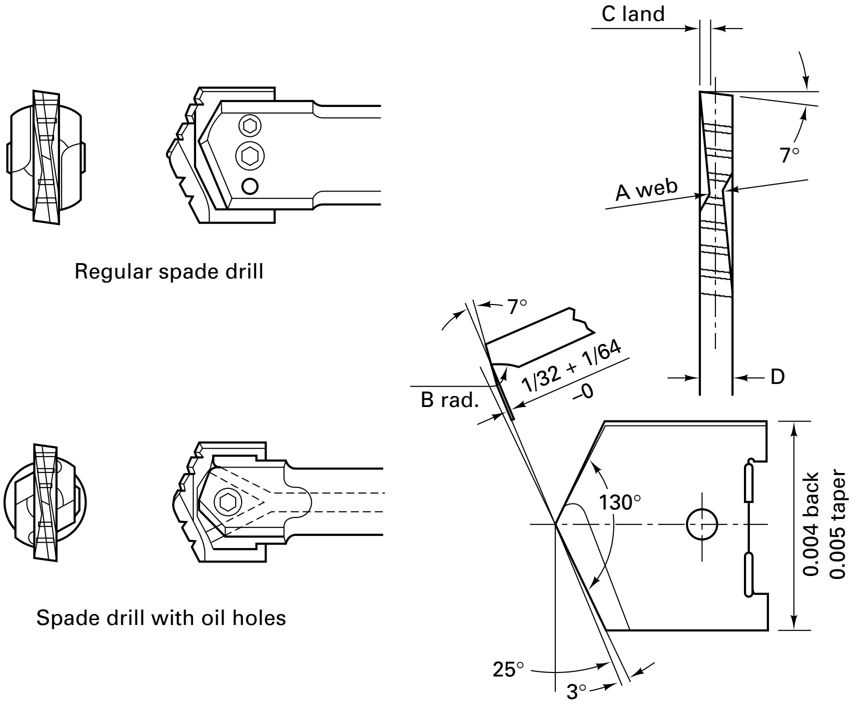

FIGURE 23-12 (Top) Regular spade drill; (middle) spade drill with oil holes; (bottom) spade drill geometry, nomenclature.

TABLE 23-3 Recommended Surface Speeds and Feeds for High-Speed Steel Spade Drills for Various Materials

Material	Surface Speed (ft per min)
Mild machinery steel 0.2 and 0.3 carbon	65–110
Steel, annealed 0.4 to 0.5 carbon	55–80
Tool steel, 1.2 carbon	45–60
Steel forging	35–50
Alloy steel	45–70
Stainless steel, free machining	50–70
Stainless steel, hard	25–40
Cast iron, soft	80–150
Cast iron, medium hard	55–100
Cast iron, hard, chilled	25–40
Malleable iron	79–90
Brass and bronze, ordinary	200–300
Bronze, high tensile	70–150
Monel metal	35–50
Aluminum and its alloys	200–300
Magnesium and its alloys	250–400

Feed Rates for Spade Drilling (inches per revolution)

Drill Size (inches)	Cast Iron Malleable Iron Brass Bronze	Medium Steel Stainless Steel Monel Metal Drop-Forged Alloys Tool Steel (annealed)	Tough Steel Drop Forging Aluminum
1 to $1^{1}/_{4}$	0.010–0.020	0.008–0.014	0.006–0.012
$1^{1}/_{4}$ to $^{3}/_{4}$	0.010–0.024	0.008–0.018	0.008–0.017
$1^{3}/_{4}$ to $2^{1}/_{2}$	0.010–0.030	0.010–0.024	0.010–0.017
$2^{1}/_{2}$ to 4	0.012–0.032	0.012–0.030	0.010–0.017
4 to 6	0.012–0.032	0.010–0.024	0.008–0.017

Source: Waukesha Cutting Tools, Inc.

existing hole, but a spade drill can drill deep holes in solids or stacked materials. Spade drills are less expensive because the long supporting bar can be made of ordinary steel. The drill point can be ground with a minimum chisel point. The main body can be made more rigid because no flutes are required, and it can have a central hole through which a fluid can be circulated to aid in cooling and in chip removal. The cutting blade is easier to sharpen; only the blades need to be TiN-coated.

Spade drills are often used to machine a shallow locating cone for a subsequent smaller drill and at the same time to provide a small bevel around the hole to facilitate later tapping or assembly operations. Such a bevel also frequently eliminates the need for deburring. This practice is particularly useful on mass-production and numerically controlled machines.

Carbide-tipped drills and drills with indexable inserts are also available (see Figure 23-13) with one- and two-piece inserts for drilling shallow holes in solid workpieces. *Indexable insert drills* can produce a hole four times faster than a spade drill because they run at high speeds/low feeds and are really more of a boring operation than a drilling process.

However, to use indexable drills, you must have an extremely rigid machine tool and setup, adequate horsepower, and lots of cutting fluid. Indexable drills are roughing tools generating hole tolerances of and surface finish of 250 rpms or greater. The tool is designed for the inboard insert to cut past the centerline of the tool so the inboard tool is positioned radially below the center. See Table 23-4 for an indexable drilling troubleshooting guide.

FIGURE 23-13 One- and two-lipped indexable insert drills are widely used for holes over 1 inch in diameter. *(Courtesy of Waukesha.)*

TABLE 23-4 Indexable Drilling Troubleshooting Guide[a]

Problem	Source	Solution
Insert chipping or breakage[b]	Off-center drill, caused by misalignment	Maintain proper alignment. Concentricity not to exceed ±0.005 TIR.
	Improper seating of tool in tool holder, spindle, or turret	Check tool shank and socket for nicks and dirt. Check parting line between tool shank and socket with feeler gage. Check to see if tool is locked tightly.
	Deflection because of too much overhand and lack of rigidity	With indicator, check if tool can be moved by hand. Check if tool can be held shorter.
	Improper seating of inserts in pockets	Clean pockets whenever indexing or changing inserts. Check pockets for nicks and burrs. Check if inserts rest completely on pocket bottoms.
	Damaged insert screws	Check head and thread for nicks and burns. Do not overtorque screws.
	Improper speeds and feeds	Check recommended guidelines for given materials.
	Insufficient coolant supply	Check coolant flow.
	Improper carbide grade in inboard station	Recommend straight grade for multiple-insert drills.
Grooving on back stroke; drill body rubbing hole wall; over- or undersize holes	Off-center drill	Maintain proper alignment and concentricity. Check bottom of hole or disk for center stub.
	Deflection	Check setup rigidity. Check speed and feed guidelines.
Poor hole surface finish	Vibrations	Check setup and part rigidity. Check seat in spindle or tool holder. Check speeds and feeds.
	Insufficient coolant pressure and volume	Increase coolant pressure and flow. Is coolant flow constant? Make sure coolant reaches inserts at all times.
	Recutting chips, causing drill to jump	Increase coolant flow. Add coolant grooves.
	Poor chip control; chips trapped in hole	Mostly speed or feed.
	Chatter	Mostly feed rate.
Very short, thick, flat chips	Feed rate too high in relation to cutting speed	Lower feed or increase speed.
Long and stringy chips	Feed rate too low in relation to cutting speed	Increase feed rate or decrease speed. Use dimple inserts.
Unable to loosen insert locking screws	Seized threads, caused by coolant or heat	Apply water and heat-resistant lubricant to threads.

[a] *Source:* "Fundamentals of Indexable Drilling," K. L. Anderson, *Machining Technology*, vol. 2, no. 3, 1991.

[b] If constant chipping occurs, especially on an inner insert, and conditions are optimum, try an uncoated-carbide insert or a grade with higher transverse rapture strength.

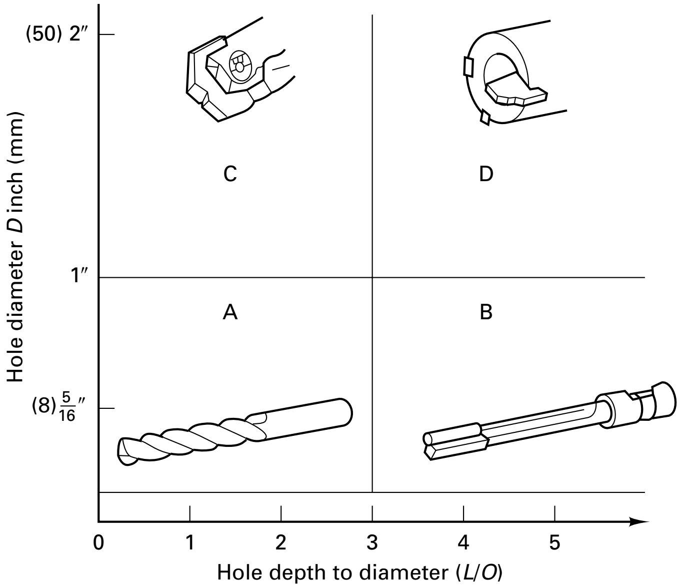

Sector	Typical drill types
A	Twist drill (HSS) Center core drill
B	Twist drill Gundrill BTA Ejector drill
C	Twist drill Indexable insert drill Spade drill Center core drill
D	BTA Ejector drill

FIGURE 23-14 Drill selection depends on hole diameter and hole depth.

A high-pressure, pulsating coolant system can generate pressures up to 300 psi and works well with indexable drilling. It can have disadvantages, however. High pressure with pulsating action can decrease chip control and cause drill deflection. A high-pressure coolant stream can flatten chips at the point of forming and forces them into the cut, causing recutting, insert chipping, and poor hole finishes. The pressure can force chips between the drill body and hole diameter, wrapping them around the drill. Friction then will weld the chips to the tool body or hole.

The diameter of the hole and the length/diameter ratio usually determine what kind of drill to use. Figure 23-14 explores how drill selection depends on the depth of the hole and the diameter of the drill: Section A shows the drilling areas of relatively shallow holes and small diameters. About half of all the drilling process falls within the category of this section. It is the section for which the majority of the work is done by twist drills and a very few cemented carbide drills. Section B is the drilling of deep holes for which cemented carbide gundrills are used. Section C is that of shallow holes having large diameters, for which spade drills are used. Section D is that of deep holes having large diameters, for which BTA tools are used.

MICRODRILLING

As the term suggests, microdrilling involves very-small-diameter cutting tools, including drills, end mills, routers, and other special tools. Drills from 0.002 in. (0.05 mm) and mills to 0.005 in. in diameter are used to produce geometries involving dimensions at which many workpiece materials no longer exhibit uniformity and homogeneity. Grain borders, inclusions, alloy or carbide segregates, and microscopic voids are problems in microdrilling, where holes of 0.02 to 0.0001 in. have been drilled using pivot drills, as shown in Figure 23-15.

Pivot drills are two-lipped (two-fluted), end-cutting tools of relatively simple geometry. Web thickness tapers toward the point, and a generous back-taper is incorporated. For softer workpiece materials, point angles are typically 118° and lip clearance is 15°. For steels and general use in harder metals, 135° points and 8° clearance are recommended. The chisel edge is similar to that of a twist drill. Pivot drills are made of tungsten-alloy tool steel in standard sizes from 0.0001 in. to 0.125 in. and of sintered tungsten carbide from 0.001 in. to 0.125 in.

Small drills easily deflect, and getting accurate and precise holes requires a machine with a high-quality spindle and very sensitive feeding pressure. In the medical components field, much of this machining work is performed on Computer Numerical Control (CNC) Swiss-type turning machines. Speeds and feeds are greatly reduced with frequent pecking to clear the chips. Use a light, lard-based, sulfurized cutting oil.

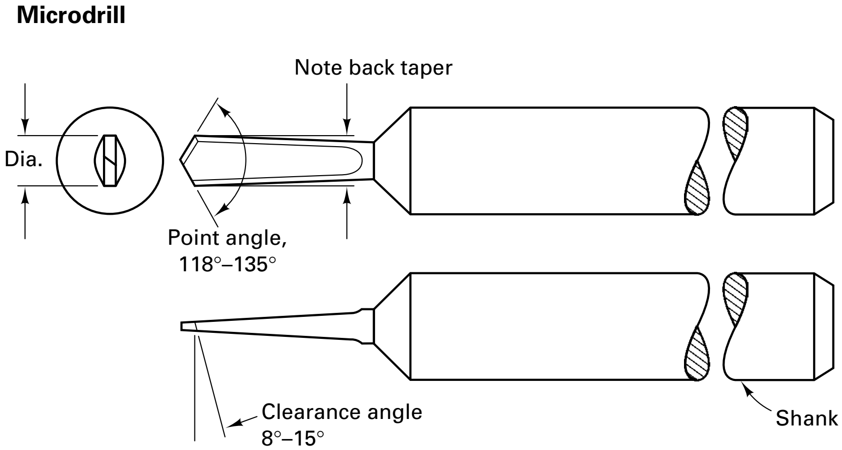

FIGURE 23-15 Pivot microdrill for drilling very-small-diameter holes.

23.4 TOOL HOLDERS FOR DRILLS

Straight-shank drills must be held in some type of drill *chuck* (Figure 23-16). Chucks are adjustable over a considerable size range and have radial steel fingers. When the chuck is tightened by means of a chuck key, these fingers are forced inward against the drill. On smaller drill presses, the chuck often is permanently attached to the machine

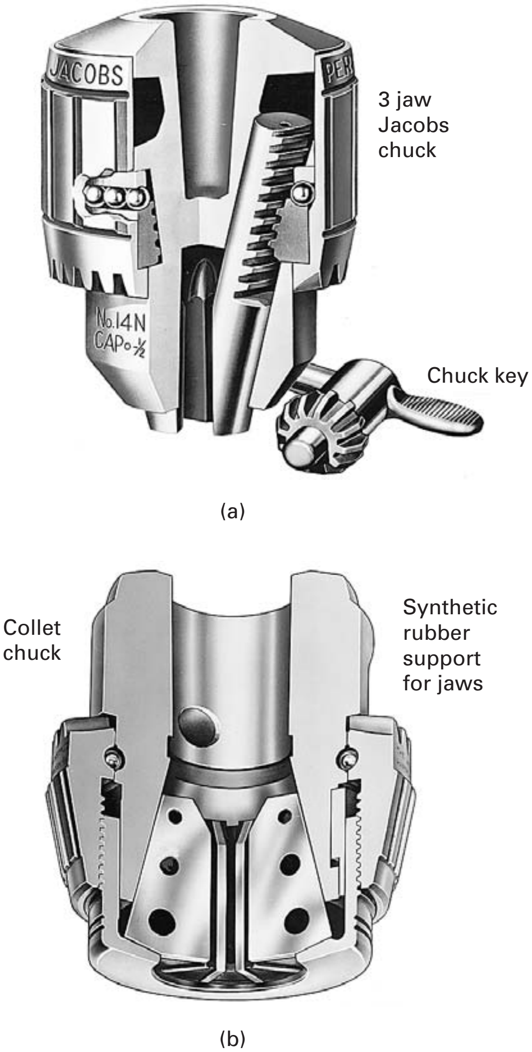

FIGURE 23-16 Two of the most commonly used types of drill chucks are the 3-jaw Jacobs chuck (above) and the collet chuck with synthetic rubber support for jaws. *(Courtesy of Jacobs Manufacturing Company.)*

spindle, whereas on larger drilling machines the chucks have a tapered shank that fits into the female Morse taper of the machine spindle. Special types of chucks in semiautomatic or fully automatic machines permit quite a wide range of sizes of drills to be held in a single chuck.

Chucks using chuck keys require that the machine spindle be stopped in order to change a drill. To reduce the downtime when drills must be changed frequently, *quick-change chucks* are used. Each drill is fastened in a simple round collet that can be inserted into the chuck hole while it is turning by merely raising and lowering a ring on the chuck body. With the use of this type of chuck, center drills, drills, counterbores, reamers, and so on can be manually changed in quick succession. For carbide drills, collet-type holders with thrust bearings are recommended (Figure 23-17). For drills using an internal coolant supply, a very rigid chuck with either an inducer or through-spindle coolant source is recommended.

Conventional holders such as keyless chucks cannot be used because the gripping strength is limited. Collet holders should be cleaned periodically with oil to remove small chips.

The entire flute length must protrude from the chuck. At maximum hole depth, the length of flute protruding from the hole must be at least 1 to 1.5 times the drill diameter. Radial runout at the drill tip must not exceed 0.001 in.

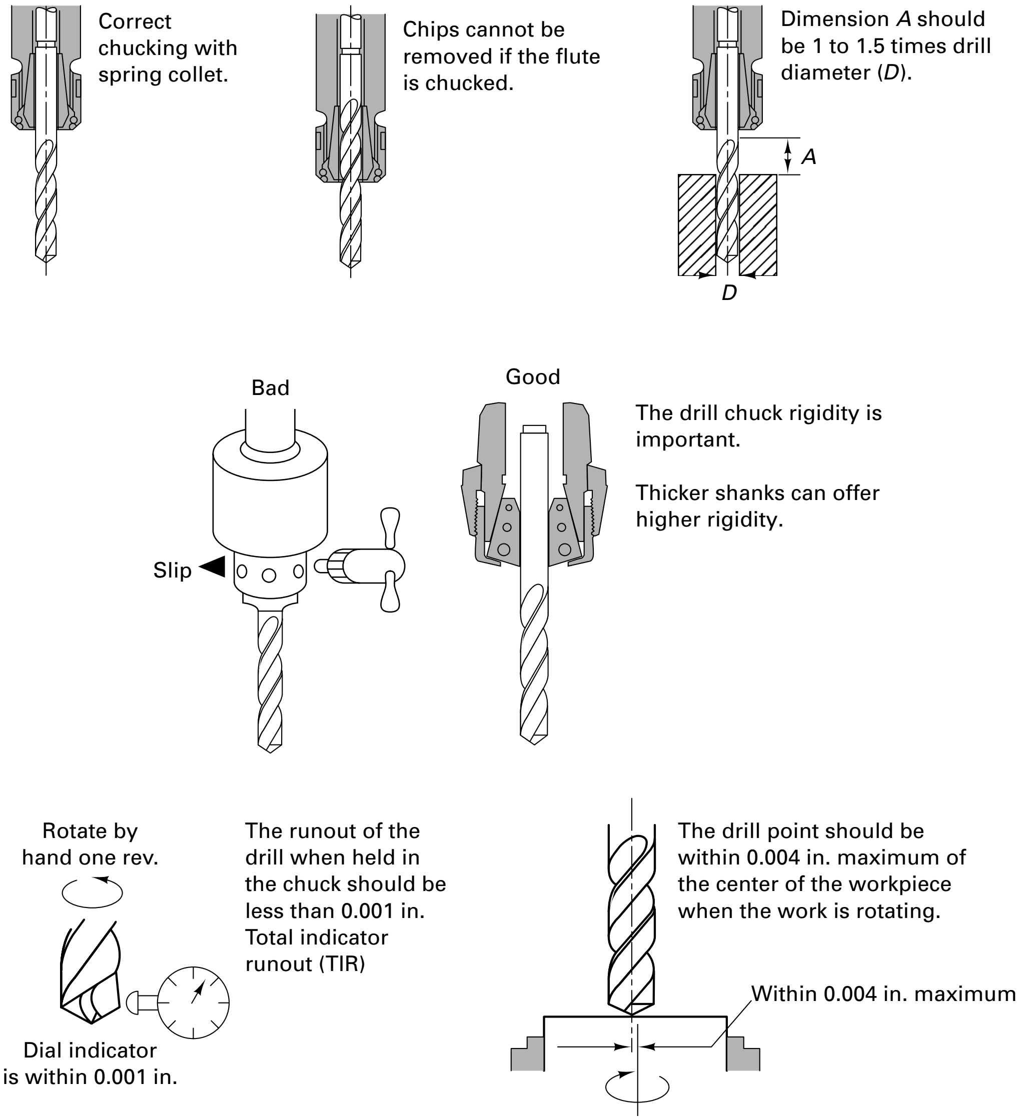

FIGURE 23-17 Here are some suggestions for correct chucking of carbide drills.

23.5 WORKHOLDING FOR DRILLING

Work that is to be drilled is ordinarily held in a vise or in specially designed workholders called *jigs*. Workholding devices are the subject of Chapter 25, where the design of workholding devices is discussed. Many examples of drill jigs are shown.

With regard to safety, the work should not be held on the table by hand unless adequate leverage is available, even in light drilling operations. This is a dangerous practice and can lead to serious accidents, because the drill has a tendency to catch on the workpiece and cause it to rotate, especially when the drill exits the workpiece. Work that is too large to be held in a jig can be clamped directly to the machine table using suitable bolts and clamps and the slots or holes in the table. Jigs and workholding devices on indexing machines must be free from play and firmly seated.

23.6 MACHINE TOOLS FOR DRILLING

The basic work and tool motions required for drilling—relative rotation between the workpiece and the tool, with relative longitudinal feeding—also occur in a number of other machining operations. Thus drilling can be done on a variety of machine tools such as lathes, horizontal and vertical milling machines, boring machines, and machining centers. This section will focus on those machines that are designed, constructed, and used primarily for drilling.

First of all, the machine tools must have sufficient power (torque) and thrust to perform the cut. It is the task of the engineer to select the correct machine or select the cutting parameters (speed and feed) based on the drill diameter, drill material, and work material (hardness). Because of the complex geometry of the drill, empirical equations are widely used. Figure 23-18 shows the type of information provided by cutting-tool manufacturers to calculate (estimate) thrust in drilling. Data with K_s (specific cutting force) and X and Y (empirical constants) are obtained from cutting-tool manufacturers. Much of this kind of data has been developed for high-speed-steel tools. When using solid carbide tools, rigid machines such as machining centers or NC turning machines are recommended, whereas a radial drilling machine is not recommended (not rigid enough).

Rigidity is especially important in avoiding chatter. A lack of rigidity in the cutting tool, the workpiece, or the machine tool permits the affected members to deflect due to the cutting forces developing the conditions for chatter (see Chapter 20), with the result that the cutting lips have a hammering action against the work. So, use the shortest tool possible.

In addition, backlash in the feed mechanism should be kept at a minimum to reduce strain on the drill when it breaks through the bottom of the hole.

The common name for the machine tool used for drilling is the *drill press*. Drill presses consist of a *base*, a *column* that supports a *powerhead*, a *spindle*, and a *worktable*. On small machines, the base rests on a workbench, whereas on larger machines it rests on the floor (Figure 23-19). The column may be either round or of box-type construction, the latter being used on larger, heavy-duty machines, except in radial types. The powerhead contains an electric motor and means for driving the spindle in rotation at several speeds. On small drilling machines this may be accomplished by shifting a belt on a step-cone pulley, but on larger machines a geared transmission is used.

The heart of any drilling machine is its spindle. In order to drill satisfactorily, the spindle must rotate accurately and also resist whatever side forces result from the drilling process. In virtually all machines the spindle rotates in preloaded ball or taper-roller bearings. In addition to powered rotation, provision is made so that the spindle can be moved axially to feed the drill into the work. On small machines the spindle is fed by hand, using the handles extending from the capstan wheel; on larger machines power feed is provided. Except for some small bench types, the spindle contains a hole with a Morse taper in its lower end into which taper-shank drills or drill chucks can be inserted.

The worktables on drilling machines may be moved up and down on the column to accommodate work of various sizes. On round-column machines the table can usually

Axial Thrust Force

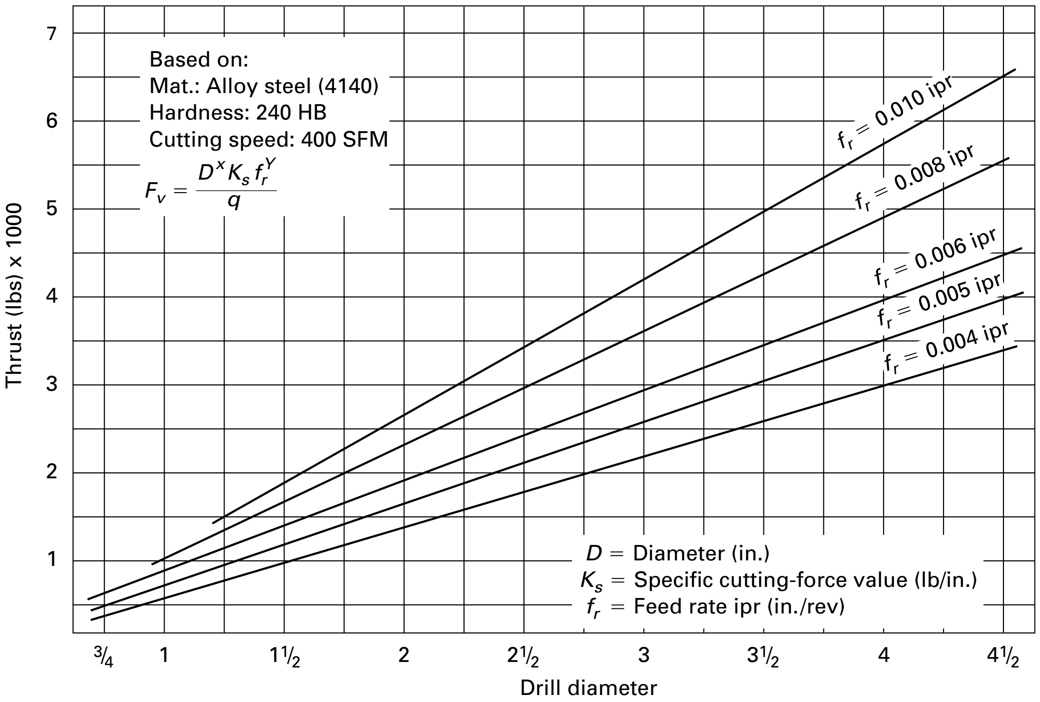

MATERIAL	BRINELL HARDNESS		FEED (IPR)							
			0.004	0.005	0.006	0.008	0.010	0.012	0.016	0.020
		E	0.35	0.39	0.47	0.60	0.70	0.80	0.90	1.08
		C	3.3	3.5	3.8	4.4	4.4	4.4	4.0	3.6
PLAIN-CARBON STEEL	140–220		444230	435510	431150	426790	418070	409350	391910	374460
	220–300		493590	483900	479060	474210	464520	454830	435450	416070
FREE-MACHINING STEELS	120–180		296150	290340	287440	284530	278710	272900	261270	249640
	180–260		345510	338730	335340	331950	325160	318380	304820	291250
ALLOY STEELS	260–340		493590	483900	479060	474210	464520	454830	435450	416070
STAINLESS STEELS	150–200		370190	362930	359300	355660	348390	341120	326590	312050
	200–300		444230	435510	431150	426790	418070	409350	391910	374460
CAST IRON	180–250		345510	338730	335340	331950	325160	318380	304820	291250
ALUMINUM			148080	145170	143720	142260	139360	136450	130640	124820
TITANIUM			320830	314530	311390	308240	301940	295640	283040	270450
HIGH-TEMPERATURE ALLOYS			542950	532290	526970	521630	510970	500310	478990	457680

Values in in.-lb/in^2.

F_v = Axial thrust
$= D^{1.15} \times K_s \times f_r^{0.8}$
where
D = Drill diameter (inches)
K_s = Specific cutting energy from table (in-lb/in^2)
f_r = Feed (in./rev)

FIGURE 23-18 Estimating the thrust force in drilling; example from Waukesha Cutting Tools.

be rotated out of the way so that workpieces can be mounted directly on the base. On some box-column machines the table is mounted on a subbase so that it can be moved in two directions in a horizontal plane by means of feed screws.

Figure 23-19 shows examples of common types of drilling machines used in production environments. Drilling machines usually are classified as bench, upright with single spindle, turret or NC turret, gang, multispindle, deep-hole, and transfer.

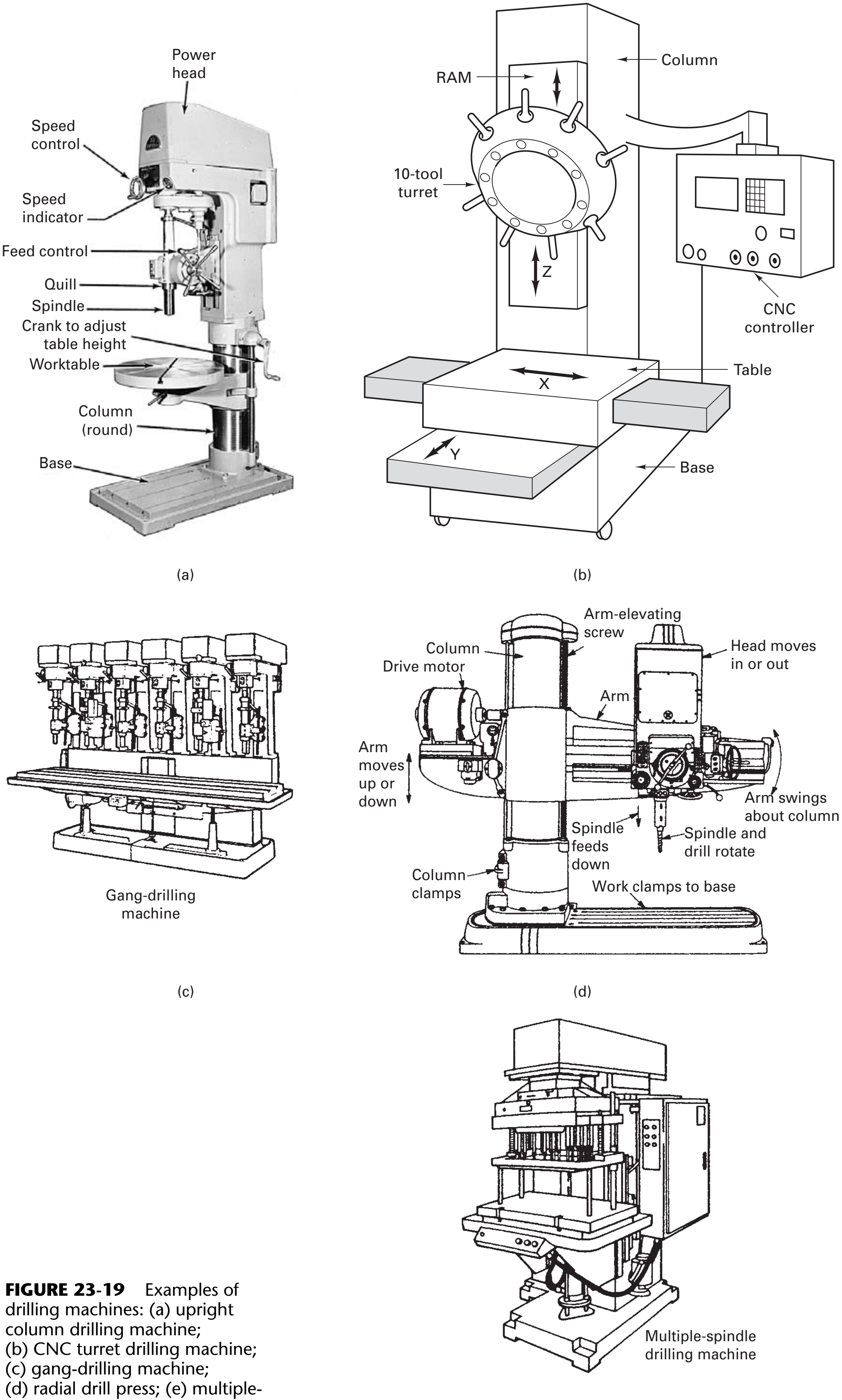

(a) (b) (c) (d) (e)

FIGURE 23-19 Examples of drilling machines: (a) upright column drilling machine; (b) CNC turret drilling machine; (c) gang-drilling machine; (d) radial drill press; (e) multiple-spindle drilling machine.

With bench drill presses, holes up to $^1/_2$ in. in diameter can be drilled. The same type of machine can be obtained with a long column so that it can stand on the floor. The size of bench and upright drilling machines is designated by *twice* the distance from the centerline of the spindle to the nearest point on the column, this being an indication of the maximum size of the work that can be drilled in the machines. For example, a 15-in. drill press will permit a hole to be drilled at the center of a workpiece 15 in. in diameter.

Sensitive drilling machines are essentially smaller, plain bench-type machines with more accurate spindles and bearings. They are capable of operating at higher speeds, up to 30,000 rpm. Very sensitive hand-operated feeding mechanisms are provided for use in drilling small holes. Such machines are used for tool and die work and for drilling very small holes, often less than a few thousandths of an inch in diameter, when high spindle speeds are necessary to obtain proper cutting speed and sensitive feel to provide delicate feeding to avoid breakage of the very small drills.

Upright drilling machines usually have spindle speed ranges from 60 to 3500 rpm and power feed rates, from 4 to 12 steps, from about 0.004 to 0.025 in. rev. Most modern machines use a single-speed motor and a geared transmission to provide the range of speeds and feeds. The feed clutch disengages automatically when the spindle reaches a preset depth.

Worktables on most upright drilling machines contain holes and slots for use in clamping work and nearly always have a channel around the edges to collect cutting fluid, when it is used. On box-column machines, the table is mounted on vertical ways on the front of the column and can be raised or lowered by means of a crank-operated elevating screw.

In mass production *gang-drilling machines* are often used when several related operations, such as drilling holes of different sizes, reaming, or counterboring, must be done on a single part. These consist essentially of several independent columns, heads, and spindles mounted on a common base and having a single table. The work can be slid into position for the operation at each spindle. They are available with or without power feed. One or several operators may be used. This machine would be an example of a simple small cell except that the machines are usually not single-cycle automatics.

Turret-type, *upright drilling machines* are used when a series of holes of different sizes, or a series of operations (such as center drilling, drilling, reaming, and spot facing), must be done repeatedly in succession. The selected tools are mounted in the turret. Each tool can quickly be brought into position merely by rotation of the turret. These machines automatically provide individual feed rates for each spindle and are often numerically controlled.

Radial drilling machine tools are used on large workpieces that cannot be easily handled manually. As shown in Figure 23-19, these machines have a large, heavy, round, vertical column supported on a large base. The column supports a radial arm that can be raised and lowered by power and rotated over the base. The spindle head, with its speed- and feed-changing mechanism, is mounted on the radial arm. It can be moved horizontally to any desired position on the arm. Thus the spindle can quickly be positioned properly for drilling holes at any point on a large workpiece mounted either on the base of the machine or even sitting on the floor.

Plain radial drilling machines provide only a vertical spindle motion. On *semiuniversal machines*, the spindle head can be pivoted at an angle to a vertical plane. On *universal machines*, the radial arm is rotated about a horizontal axis to permit drilling at any angle.

Radial drilling machines are designated by the radius of the largest disk in which a center hole can be drilled when the spindle head is at its outermost position. Sizes from 3 to 12 ft are available. Radial drilling machines have a wide range of speeds and feeds, can do boring, and include provisions for tapping (internal threading) (see Chapter 29).

Multiple-spindle drilling machines (Figure 23-19) are mass-production machines with as many as 50 spindles driven by a single powerhead and fed simultaneously into the work. Figure 23-20 shows an adjustable multiple-spindle head that can be mounted on a regular single spindle-drill press. Figure 23-20 shows the methods of driving and positioning the spindles, which permit them to be adjusted so that holes can be drilled

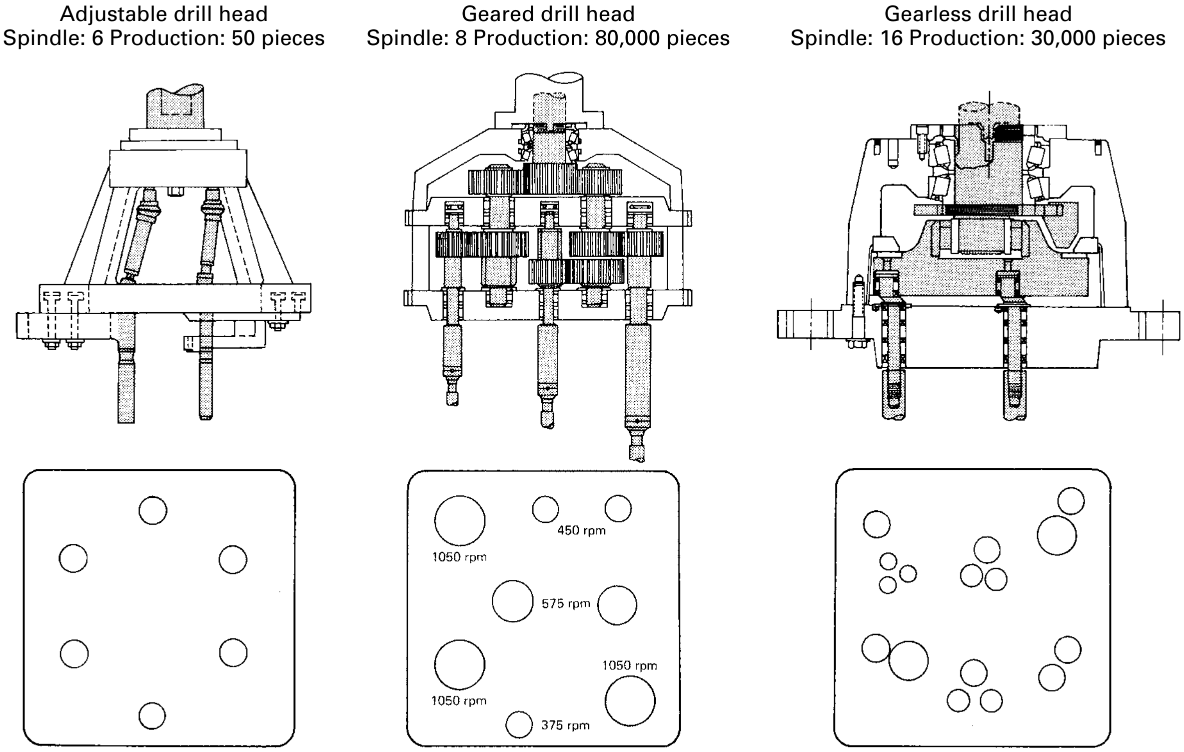
Adjustable drill head
Spindle: 6 Production: 50 pieces

Geared drill head
Spindle: 8 Production: 80,000 pieces

Gearless drill head
Spindle: 16 Production: 30,000 pieces

An adjustable drill head should be considered for low-production jobs. However, many short-run jobs such as this would be required to justify a multiple-spindle head.

A geared drill head is most appropriate in this situation, where there is a large difference in sizes and a high daily production.

Only a gearless head can perform this operation in one pass, due to the close proximity of the spindle centers.

FIGURE 23-20 Three basic types of multiple-spindle drill heads: (left) adjustable; (middle) geared; (right) gearless. *(Courtesy of Zagar Incorporated.)*

at any location within the overall capacity of the head. Special drill jigs are often designed and built for each job to provide accurate guidance for each drill. Although such machines and workholders are quite costly, they can be cost-justified when the quantity to be produced will justify the setup cost and the cost of the jig. Reducing setup on these machines is difficult. Numerically controlled drill presses other than turret drill presses are not common because drilling and all its related processes can be done on vertical or horizontal NC machining centers equipped with automatic tool changers (see Chapter 31).

Special machines are used for drilling long (deep) holes, such as are found in rifle barrels, connecting rods, and long spindles. High cutting speeds, very light feeds, and a copious flow of cutting fluid ensure rapid chip removal. Adequate support for the long, slender drills is required. In most cases horizontal machines are used. The work is rotated in a chuck with steady rests providing support along its length, as required. The drill does not rotate and is fed into the work. Vertical machines are also available for shorter workpieces. Notice the similarity between this process and boring.

■ 23.7 CUTTING FLUIDS FOR DRILLING

For shallow holes, the general rules relating to cutting fluids, as given in Chapter 21, are applicable. When the depth of the hole exceeds one diameter, it is desirable to increase the lubricating quality of the fluid because of the rubbing between the drill margins and the wall of the hole. The effectiveness of a cutting fluid as a coolant is quite variable in drilling. While the rapid exit of the chips is a primary factor in heat removal, this action

TABLE 23-5 Cutting Fluids for Drilling

Work Material	Cutting Fluid
Aluminum and its alloys	Soluble oil, kerosene, and lard-oil compounds; light, nonviscous neutral oil; kerosene and soluble oil mixtures
Brass	Dry or a soluble oil; kerosene and lard-oil compounds; light, nonviscous neutral oil
Copper	Soluble oil, strained lard oil, oleic-acid compounds
Cast iron	Dry or with a jet of compressed air for cooling
Malleable iron	Soluble oil, nonviscous neutral oil
Monel metal	Soluble oil, sulfurized mineral oil
Stainless steel	Soluble oil, sulfurized mineral oil
Steel, ordinary	Soluble oil, sulfurized oil, high extreme-pressure-value mineral oil
Steel, very hard	Soluble oil, sulfurized oil, turpentine
Wrought iron	Soluble oil, sulfurized oil, mineral-animal oil compound

- Neat oil can be used effectively with the solid carbide drills for low-speed drilling (up to 130 sfpm).
- If the work surface becomes hard or blue in color, decrease the rpm and use neat oil.
- For heavy-duty cutting, emulsion-type oil containing some extreme pressure additive is recommended.
- A volume of 3.0 gal/min at a pressure of 37–62 lb/in.^{2} is recommended.
- A double stream supply of fluid is recommended.

also tends to restrict entry of the cutting fluid. This is of particular importance in drilling materials that have poor heat conductivity. Recommendations for cutting fluids for drilling are given in Table 23-5.

If the hole depth exceeds two or three diameters, it is usually advantageous to withdraw the drill each time it has drilled about one diameter of depth, to clear chips from the hole. Some machines are equipped to provide this “pecking” action automatically.

Where cooling is desired, the fluid should be applied copiously. For severe conditions, drills containing coolant holes have a considerable advantage. Not only is the fluid supplied near the cutting edges, but the coolant flow aids in flushing the chips from the hole. Where feasible, drilling horizontally has distinct advantages over drilling vertically downward.

23.8 COUNTERBORING, COUNTERSINKING, AND SPOT FACING

Drilling is often followed by *counterboring*, *countersinking*, or *spot facing*. As shown in Figure 23-21, each provides a bearing surface at one end of a drilled hole. They are usually done with a special tool having from three to six cutting edges.

Counterboring provides an enlarged cylindrical hole with a flat bottom so that a bolt head, or a nut, will have a smooth bearing surface that is normal to the axis of the hole; the depth may be sufficient so that the entire bolt head or nut will be below the surface of the part. The pilot on the end of the tool fits into the drilled hole and helps to ensure concentricity with the original hole. Two or more diameters may be produced in a single counterboring operation. Counterboring also can be done with a single-point tool, although this method ordinarily is used only on large holes and essentially is a boring operation. Some counterboring tools are shown in Figure 23-21b.

Countersinking makes a beveled section at the end of a drilled hole to provide a proper seat for a flat-head screw or rivet. The most common angles are 60°, 82°, and 90°. Countersinking tools are similar to counterboring tools except that the cutting edges are elements of a cone, and they usually do not have a pilot because the bevel of the tool causes them to be self-centering.

Spot facing is done to provide a smooth bearing area on an otherwise rough surface at the opening of a hole and normal to its axis. Machining is limited to the minimum depth that will provide a smooth, uniform surface. Spot faces thus are somewhat easier and more economical to produce than counterbores. They are usually made with a multiedged end-cutting tool that does not have a pilot, although counterboring tools are frequently used.

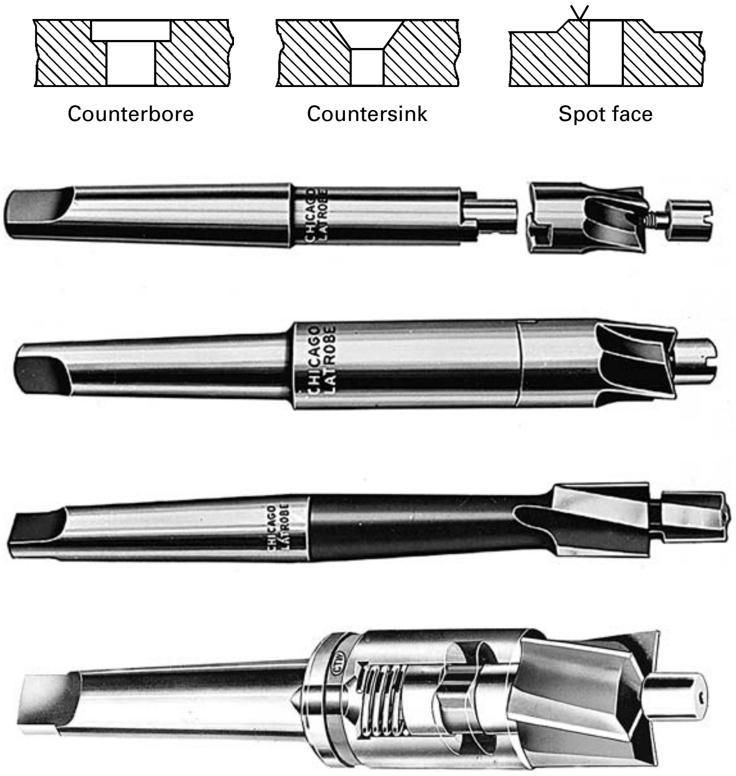

FIGURE 23-21 (a) Surfaces produced by counterboring, countersinking, and spot facing. (b) Counterboring tools: (bottom to top) interchangeable counterbore; solid, taper-shank counterbore with integral pilot; replaceable counterbore and pilot; replaceable counterbore, disassembled. *(Courtesy of Ex-Cell-O Corporation and Chicago Latrobe Twist Drill Works.)*

■ 23.9 REAMING

Reaming removes a small amount of material from the surface of holes. It is done for two purposes: to bring holes to a more exact size and to improve the finish of an existing hole. Multiedge cutting tools are used, as shown in Figure 23-22. No special machines are built for reaming. The same machine that was employed for drilling the hole can be used for reaming by changing the cutting tool.

To obtain proper results, only a minimum amount of materials should be left for removal by reaming. As little as 0.005 in. is desirable, and in no case should the amount exceed 0.015 in. A properly reamed hole will be within 0.001 in. of correct size and have a fine finish.

The principal types of reamers are shown in Figures 23-22 and 23-23. *Hand reamers* are intended to be turned and fed by hand and to remove only a few thousandths of an inch of metal. They have a straight shank with a square tang for a wrench. They can have straight or spiral flutes and be solid or expandable. The teeth have relief along their edges and thus may cut along their entire length. However, the reamer is tapered from 0.005 to 0.010 in. in the first third of its length to assist in starting it in the hole, and most of the cutting therefore takes place in this portion.

Machine or *chucking reamers* are for use with various machine tools at slow speeds. The best feed is usually two to three times the drilling feed. Machine reamers have chamfers on the front end of the cutting edges. The chamfer causes the reamer to seat firmly and concentrically in the drilled hole, allowing the reamer to cut at full diameter. The longitudinal cutting edges do little or no cutting. Chamfer angles are usually 45°. Reamers have straight or tapered shanks and straight or spiral flutes. *Rose-chucking reamers* are ground cylindrical and have no relief behind the outer edges of the teeth. All cutting is done on the beveled ends of the teeth. *Fluted-chucking reamers*, on the other hand, have relief behind the edges of the teeth as well as beveled ends. They can therefore cut on all portions of the teeth. Their flutes are relatively short, and they are intended for light finishing cuts. For best results they should not be held rigidly but permitted to float and be aligned by the hole.

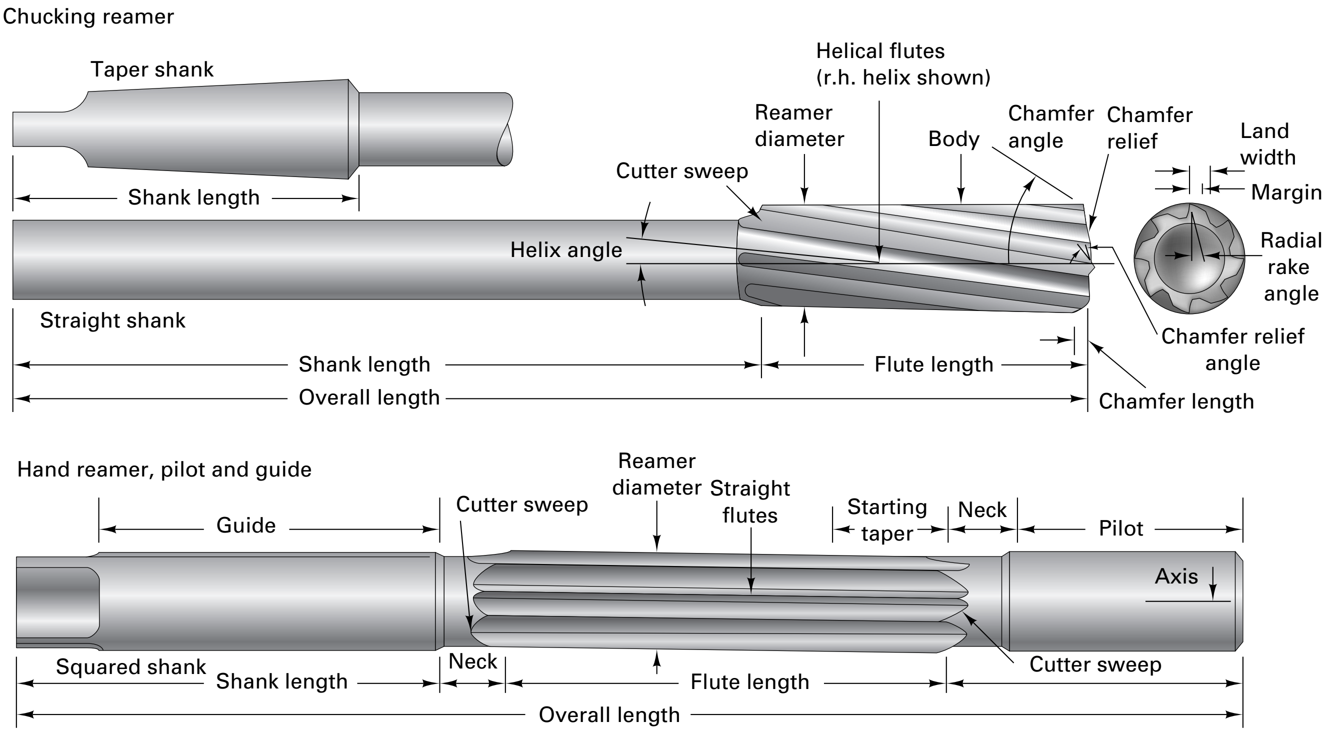

FIGURE 23-22 Standard nomenclature for hand and chucking reamers.

Shell reamers often are used for larger sizes in order to save cutting-tool material. The shell, made of tool steel for smaller sizes and with carbide edges for larger sizes or for mass-production work, is held on an arbor that is made of ordinary steel. One arbor may be used with any number of shells. Only the shell is subject to wear and needs to be replaced when worn. They may be ground as rose or fluted reamers.

Expansion reamers can be adjusted over a few thousandths of an inch to compensate for wear or to permit some variation in hole size to be obtained. They are available in both hand and machine types.

FIGURE 23-23 Types of reamers: (top to bottom) Straight-fluted rose reamer, straight-fluted chucking reamer, straight-fluted taper reamer, straight-fluted hand reamer, expansion reamer, shell reamer, adjustable insert-blade reamer.

Adjustable reamers have cutting edges in the form of blades that are locked in a body. The blades can be adjusted over a greater range than expansion reamers. This permits adjustment for size and to compensate for regrinding. When the blades become too small from regrinding, they can be replaced. Both tool steel and carbide blades are used.

Taper reamers are used for finishing holes to an exact taper. They may have up to eight straight or spiral flutes. Standard tapers, such as Morse, Jarno, or Brown & Sharpe, come in sets of two. The *roughing reamer* has nicks along the cutting edge to break up the heavy chips that result as a cylindrical hole is cut to a taper. The *finishing reamer* has smooth cutting edges.

REAMING PRACTICE

If the material to be removed is free-cutting, reamers of fairly light construction will give satisfactory results. However, if the material is hard, then tough, solid-type reamers are recommended, even for fairly large holes.

To meet quality requirements, including both finish and accuracy (tolerances on diameter, roundness, straightness, and absence of bell-mouth at ends of holes), reamers must have adequate support for the cutting edges, and reamer deflection must be minimal. Reaming speed is usually two-thirds the speed for drilling the same materials. However, for close tolerances and fine finish, speeds should be slower.

Feeds are usually much higher than those for drilling and depend upon material. A feed of between 0.0015 and 0.004 in. per flute is recommended as a starting point. Use the highest feed that will still produce the required finish and accuracy. Recommended cutting fluids are the same as those for drilling. Reamers, like drills, should not be allowed to become dull. The chamfer must be reground long before it exhibits excessive wear. Sharpening is usually restricted to the starting taper or chamfer. Each flute must be ground exactly even, or the tool will cut oversize.

Reamers tend to chatter when not held securely, when the work or workholder is loose, or when the reamer is not properly ground. Irregularly spaced teeth may help reduce chatter. Other cures for chatter in reaming are to reduce the speed, vary the feed rate, chamfer the hole opening, use a piloted reamer, reduce the relief angle on the chamfer, or change cutting fluid. Any misalignment between the workpiece and the reamer will cause chatter and improper reaming.

■ Key Words

center core drill
chisel end
chuck
counterboring
countersinking
deep-hole drilling
drill press
drilling
flute
gang-drilling machine
gundrill
helix angle
indexable insert drill
jig
lip
multiple-spindle drilling machine
radial drilling machine
reaming, hand
reaming, machine
shell reamer
spade drill
spot facing
subland drill
tang
thrust force
trepanning
turret drilling machine
twist drill
web

■ Review Questions

1. What functions are performed by the flutes on a standard twist drill?
2. What determines the rake angle of a drill? See Figure 23-2.
3. Basically, what determines what helix angle a drill should have?
4. When a large-diameter hole is to be drilled, why is a smaller-diameter hole often drilled first?
5. Equation 23-4 for the MRR for drilling can be thought of as ____ times ____ where $f_r N_s$ is the feed rate of the drill bit.
6. Are the recommended surface speeds for spade drills given in Table 23-3 typically higher or lower than those recommended for twist drills? How about the feeds? Why?
7. What can happen when an improperly ground drill is used to drill a hole?
8. Why are most drilled holes oversize with respect to the nominally specified diameter?
9. What are the two primary functions of a combination center drill?
10. What is the function of the margins on a twist drill?

11. What factors tend to cause a drill to "drift" off the centerline of a hole?
12. The drills shown in Figure 23-13 have coolant passages in the flutes. What is the purpose of these holes?
13. In drilling, the deeper the hole, the greater the torque. Why?
14. Why do cutting fluids for drilling usually have more lubricating qualities than those for most other machining operations?
15. How does a gang-drilling machine differ from a multiple-spindle drilling machine?
16. How does a multiple-spindle drilling machine differ from a NC drilling machine with a tool changer that would hold all the drills found in the multiple-spindle machine?
17. How does the thrust force vary with feed? Why?
18. Holding the workpiece by hand when drilling is not a good idea. Why?
19. What is the rationale behind the operation sequence shown in Figure 23-10?
20. In terms of thrust, what is unusual about the slot-point drill compared to other drills?
21. What is the purpose of spot facing?
22. How does the purpose of counterboring differ from that of spot facing?
23. What are the primary purposes of reaming?
24. What are the advantages of shell reamers?
25. A drill that operated satisfactorily for drilling cast iron gave very short life when used for drilling a plastic. What might be the reason for this?
26. What precautionary procedures should be used when drilling a deep, vertical hole in mild steel when using an ordinary twist drill?
27. What is the advantage of a spade drill? Is it really a drill?
28. What is a "pecking" action in drilling?
29. Why does drill feed increase with drill size?
30. Suppose you specified a drilling feed rate that was too large. What kinds of problems do you think this might cause? See Figure 23-6 and Table 23-4 for help.

Problems

1. Suppose you wanted to drill a 1.5-in.-diameter hole through a piece of 1020 cold-rolled steel that is 2 in. thick, using an indexable insert drill. What values of feed and cutting speed will you specify, along with an appropriate allowance. Is this the correct tool? What other drill types could be used?
2. How much time will be required to drill the hole in Problem 1 using the insert drill?
3. What is the metal removal rate when a 1.5-in.-diameter hole, 2 in. deep, is drilled in 1020 steel at a cutting speed of 200 fpm with a feed of 0.010 ipr? What is the cutting time?
4. If the specific horsepower for the steel in Problem 3 is 0.9, what horsepower would be required, assuming 80% efficiency in the machine tool?
5. If the specific power of an AISI 1020 steel of 0.9, and 80% of the output of the 1.0-kW motor of a drilling machine is available at the tool, what is the maximum feed that can be used in drilling a 1-in.-diameter hole with a carbide drill? (Use the cutting speed suggested in Problem 3.)
6. Show how the approximate equation 23-5 for MRR in drilling was obtained. What assumption was needed?
7. A workpiece must have 10 holes finished in it. Manual layout time is $^1/_2$ hr/piece. To drill and ream all the holes requires 1 hour on the machine for each piece, not counting layout or setup. The labor rate is \$10/hr and the machine rate is \$20/hr. If a jig is used, the labor cost to lay out each piece can be saved. Both methods give the same-quality product, but this jig saves 40 min in processing time on the machine. How large a lot justifies the use of a jig that costs \$150 to make (labor and materials)?
8. A part has two holes located for drilling by manual layout. If a drill jig is used, 0.5 min in processing time is saved for each piece. The labor rate is \$9/hr. The overhead rate on the labor saved is 100%. Setup time is no more with than without the jig. The combined rate for interest, insurance, taxes, and maintenance is 35%. The cost of the jig is \$500.
   a. How many pieces must be made in one lot to make the jig worthwhile?
   b. How many pieces must be made on the jig in one lot each month to earn the cost of the jig in two years?
9. Manufacturer's charts will help determine the best feed and speed to run the drills. For example, a 1.5-in hole is to be drilled in 4140 steel annealed to Bhn 275. For the spade drill, speed is 80 sfm; feed, 0.009 ipr; and spindle rotation, 204 rpm. For the indexable insert drill, speed is 358 sfm; feed, 0.007 ipr; and spindle rotation, 891 rpm. Typically, an indexable insert drill can produce a hole four times faster than a spade drill but may cost (with inserts) 50% to 75% more than the equivalent spade blade and holder. For making only a couple of holes, the extra cost is not usually justified. Determine the number of holes needed to justify the extra cost of the indexable insert drill. Some additional cost data are given below.

   Ignore tool life and assume that the blades and the indexable drills make about the same number of holes. (Why is this a reasonable assumption?) The holes are 3 in. deep, with no allowance needed. Cost of drills:

Spade drill	Indexable-insert Drill
\$139.00 holder	\$273.00 drill
+21.90 per blade	+12.80 per two inserts
\$160.90	\$285.80

   Assume for this example that a machine rate of \$45/hr includes the cost of labor and machine burden.
10. Assume that you are drilling eight holes, equally spaced in a bolt-hole circle. That is, there would be holes at 12, 3, 6, and 9 o'clock and four more holes equally spaced between them. The diameter of the bolt hole circle is 6 in. The designer says that the holes must be 45° ± 1° from each other around the circle.
    a. Compute the tolerance between hole centers.
    b. Do you think a typical multiple-spindle drill setup could be used to make this bolt circle—using eight drills all at once? Why or why not?
    c. Do you think that the use of a jig may help improve the situation?
    d. Do you think a CNC drilling process could do the holes best?
11. A part with seven holes can be machined on a numerically controlled turret drill press in 3 min (estimated time based on

similar parts). The rate on the CNC machine for labor is \$34/hr. Currently, the part is being machined on a gang drill press with a special jig in 10 minutes per piece. The jig for the gang drill costs \$300; the combined rate for depreciation, interest, insurance, and taxes is 135%; and the hourly rate for the gang drill and operator is \$16. Setup time is about the same for both machines. For how many pieces is it economical to switch to the CNC?

12. It is estimated that a jig for machining a part with three holes costs \$400 and with it the operation takes 15 min per part. The operation can be done without a jig on a numerically controlled drill press in 5 min. Assume that any other conditions are the same as in Problem 11. How many pieces are needed to cost-justify the use of a jig?

www.wiley.com/college/degarmo

Chapter 23 CASE STUDY

Bolt-down Leg on a Casting

Steve Hunter is a consulting engineer and has just received the drawing shown in Figure CS-23. This is one of four legs on a casting made by the CRS Company. These legs are used to attach the device to the floor. The section drawing to the right shows the typical loading to which the leg is subjected. The company is currently drilling the bolt hole and then counterboring the land, but manufacturing has experienced some difficulty in machining the four holes. They report a lot of drill breakage. Quality control reports that distances between the four holes are frequently too large. Sales has recently reported that a substantial number of in-service failures have occurred with these legs. Steve has obtained a sketch from sales showing where the legs typically fail. This casting is manufactured from gray cast iron using the sand casting process.

1. What machining difficulties should Steve suspect this leg to have?
2. Why were the distances between the holes too large?
3. What should Steve recommend for solving these problems in the future in terms of materials, design, and manufacturing methods?
4. What should Steve recommend be done with the units in the field to stop the failures?

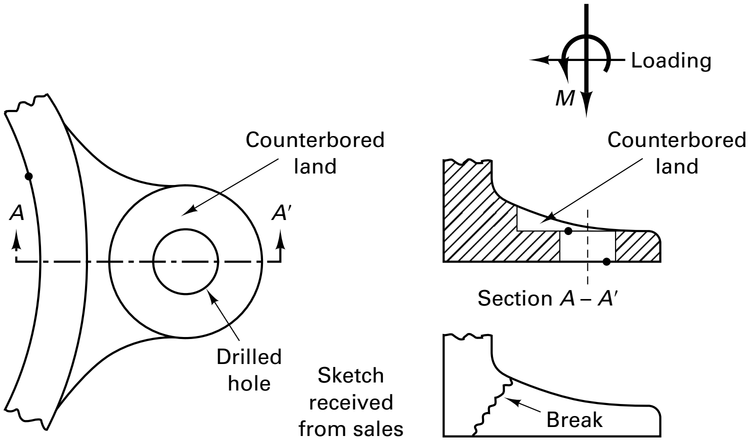

Figure CS-23 shows the design of one of four legs on a casting made by the BRC Company.

CHAPTER 24

MILLING

24.1 INTRODUCTION

Milling is a basic machining process by which a surface is generated by progressive chip removal. The workpiece is fed into a rotating cutting tool. Sometimes the workpiece remains stationary, and the cutter is fed to the work. In nearly all cases, a multiple-tooth cutter is used so that the material removal rate is high. Often the desired surface is obtained in a single pass of the cutter or work and, because very good surface finish can be obtained, milling is particularly well suited and widely used for mass-production work. Many types of milling machines are used, ranging from relatively simple and versatile machines that are used for general-purpose machining in job shops and tool and die work (these are NC or CNC machines) to highly specialized machines for mass production. Unquestionably, more flat surfaces are produced by milling than by any other machining process.

The cutting tool used in milling is known as a *milling cutter*. Equally spaced peripheral teeth will intermittently engage and machine the workpiece. This is called *interrupted cutting*. The workpieces are typically held in fixtures, as described in Chapter 25.

24.2 FUNDAMENTALS OF MILLING PROCESSES

Milling operations can be classified into two broad categories called peripheral milling and face milling. Each has many variations. In *peripheral milling* the surface is generated by teeth located on the periphery of the cutter body (Figure 24-1). The surface is parallel with the axis of rotation of the cutter. Both flat and formed surfaces can be produced by this method, the cross section of the resulting surface corresponding to the axial contour of the cutter. This process, often called *slab milling*, is usually performed on horizontal spindle milling machines. In slab milling, the tool rotates (mills) at some rpm (N_s) while the work feeds past the tool at a table feed rate f_m in inches per minute, which depends on the feed per tooth, f_t.

As in the other processes, the cutting speed V and feed per tooth are selected by the engineer or the machine tool operator. As before, these variables depend upon the work material, the tool material, and the specific process. The cutting velocity is that which occurs at the cutting edges of the teeth in the milling center. The rpm of the spindle is determined from the surface cutting speed, where D is the cutter diameter in inches according to

$$N_s = \frac{12V}{\pi D} \tag{24-1}$$

The depth of cut, called DOC or d in Figure 24-1, is simply the distance between the old and new machined surface.

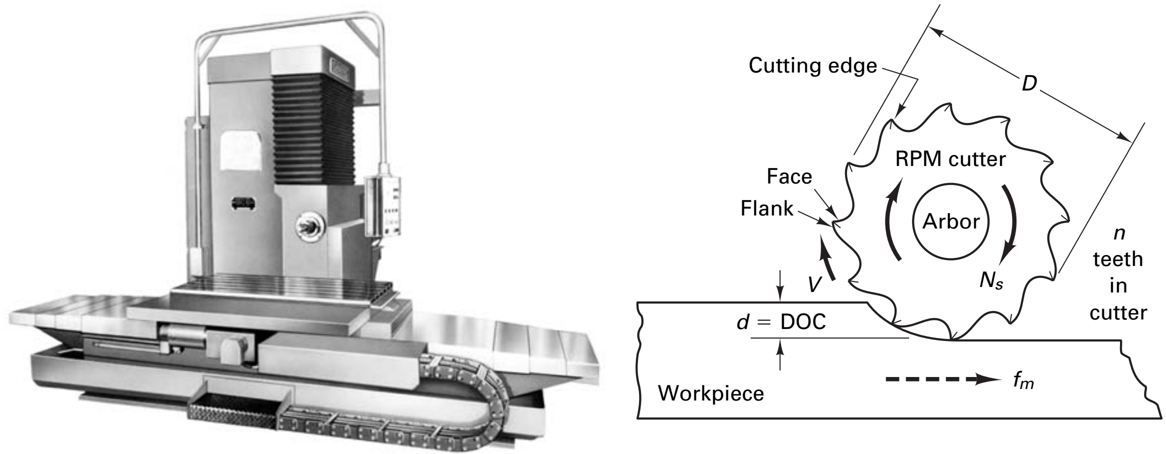

(a) Horizontal-spindle milling machine

(b) Slab milling—multiple tooth

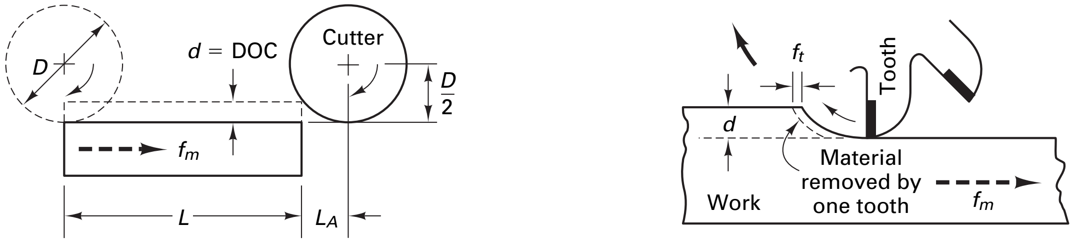

(c) Allowances for cutter approach

(d) Feed per tooth

FIGURE 24-1 Peripheral milling can be performed on a horizontal-spindle milling machine. The cutter rotates at rpm N_s, removing metal at cutting speed *V*. The allowance for starting and finishing the cut depends on the cutter diameter and depth of cut, *d*. The feed per tooth, f_t and cutting speed are selected by the operator or process planner.

The width of cut is the width of the cutter or the work, in inches, and is given the symbol W. The length of the cut L is the length of the work plus some allowance L_A for approach and overtravel. The feed of the table f_m, in inches per minute, is related to the amount of metal each tooth removes during a revolution, the feed per tooth f_t, according to

$$f_m = f_t N_s n \tag{24-2}$$

where n is the number of teeth in the cutter (teeth rev.).

The *cutting time is*

$$T_m = \frac{L + L_A}{f_m} \tag{24-3}$$

The length of approach is

$$L_A = \sqrt{\frac{D^2}{4} - \left(\frac{D}{2} - \text{DOC}\right)^2} = \sqrt{d(D - d)} \tag{24-4}$$

The metal removal rate is

$$\text{MRR} = \frac{\text{volume}}{T_m} = \frac{LWd}{T_m} = Wf_m d \text{ in.}^3/\text{min} \tag{24-5}$$

ignoring L_A. Values for f_t are given in Table 24-1, along with recommended cutting speeds in feet per minute.

TABLE 24-1 Suggested Starting Feeds and Speeds Using High-Speed Steel and Carbide Cutters[a]

		Carbide Cutters						High-Speed-Steel Cutters					
Material	Feed (in./tooth) Speed (fpm)	Face Mills	Slab Mills	End Mills	Full and Half-Side Mills	Saws	Form Mills	Face Mills	Slab Mills	End Mills	Full and Half-Side Mills	Saws	Form Mills
Malleable iron	Feed per tooth	.005–.015	.005–.015	.005–.010	.005–.010	.003–.004	.005–.010	.005–.015	.005–.015	.003–.015	.006–.012	.003–.006	.005–.010
Soft/hard	Speed, fpm	200–300	200–300	200–350	200–300	200–350	175–275	60–100	60–90	60–100	60–100	60–100	60–80
Cast steel	Feed per tooth	.008–.015	.005–.015	.003–.010	.005–.010	.002–.004	.005–.010	.010–.015	.010–.015	.005–.010	.005–.010	.002–.005	.008–.012
Soft/hard	Speed, fpm	150–350	150–350	150–350	150–350	150–300	150–300	40–60	40–60	40–60	40–60	40–60	40–60
100–150	Feed per tooth	.010–.015	.008–.015	.005–.010	.008–.012	.003–.006	.004–.010	.015–.030	.008–.015	.003–.010	.010–.020	.003–.006	.008–.010
BHN steel	Speed, fpm	450–800	450–600	450–600	450–800	350–600	350–600	80–130	80–130	80–140	80–130	70–100	70–100
150–250	Feed per tooth	.010–.015	.008–.015	.005–.010	.007–.012	.003–.006	.004–.010	.010–.020	.008–.015	.003–.010	.010–.015	.003–.006	.006–.010
BHN steel	Speed, fpm	300–450	300–450	300–450	300–450	300–450	300–450	50–70	50–70	60–80	50–70	50–70	50–70
250–350	Feed per tooth	.008–.015	.007–.012	.005–.010	.005–.012	.002–.005	.003–.008	.005–.010	.005–.010	.003–.010	.005–.010	.002–.005	.005–.010
BHN steel	Speed, fpm	180–300	150–300	150–300	160–300	150–300	150–300	35–60	35–50	40–60	35–50	35–50	35–50
350–450	Feed per tooth	.008–.015	.007–.012	.004–.008	.005–.012	.001–.004	.003–.008	.003–.008	.005–.008	.003–.101	.003–.008	.001–.004	.003–.008
BHN steel	Speed fpm	125–180	100–150	100–150	125–180	100–150	100–150	20–35	20–35	20–40	20–35	20–35	20–35
Cast iron, hard	Feed per tooth	.005–.010	.005–.010	.003–.008	.003–.010	.002–.003	.005–.010	.005–.012	.005–.010	.003–.008	.005–.010	.002–.004	.005–.010
BHN 180–225	Speed, fpm	125–200	100–175	125–200	125–200	125–200	100–175	40–60	35–50	40–60	40–60	35–60	35–50
Cast iron, medium	Feed per tooth	.008–.015	.008–.015	.005–.010	.005–.012	.003–.004	.006–.012	.010–.020	.008–.015	.003–.010	.008–.015	.003–.005	.008–.012
BHN 180–225	Speed, fpm	200–275	175–250	200–275	200–275	200–250	175–250	60–80	50–70	60–90	60–80	60–70	50–60
Cast iron, soft	Feed per tooth	.015–.025	.010–.020	.005–.012	.008–.015	.003–.004	.008–.015	.015–.030	.010–.025	.004–.010	.010–.020	.002–.005	.010–.015
BHN 150–180	Speed, fpm	275–400	250–350	275–400	275–400	250–350	250–350	80–120	70–110	80–120	80–120	70–110	60–80
Bronze	Feed per tooth	.010–.020	.010–.020	.005–.010	.008–.012	.003–.004	.008–.015	.010–.025	.008–.020	.003–.010	.008–.015	.003–.005	.008–.015
Soft/hard	Speed, fpm	300–100	300–800	300–1000	300–1000	300–1000	200–800	50–225	50–200	50–250	50–225	50–250	50–200
Brass	Feed per tooth	.010–.020	.010–.020	.005–.010	.008–.012	.003–.004	.008–.015	.010–.025	.008–.020	.005–.015	.008–.015	.003–.005	.008–.015
Soft/hard	Speed, fpm	500–1500	500–1500	500–1500	500–1500	500–1500	500–1500	150–300	100–300	150–350	150–350	150–300	100–300
Aluminum alloy	Feed per tooth	.010–.040	.010–.030	.003–.015	.008–.025	.003–.006	.008–.015	.010–.040	.015–.040	.015–.040	.010–.030	.004–.008	.010–.020
Soft/hard	Speed, fpm	2000 UP	2000 UP	2000 UP	2000 UP	2000 UP	2000 UP	300–1200	300–1200	300–1200	300–1200	300–1000	300–1200

[a] Generally, lower end of range used for inserted blade cutters, higher end of range for indexable insert cutters.

In *face milling* and *end milling*, the generated surface is at right angles to the cutter axis (Figure 24-2). Most of the cutting is done by the peripheral portions of the teeth, with the face portions providing some finishing action. Face milling is done on both horizontal- and vertical-spindle machines.

The tool rotates (face mills) at some rpm (N_s) while the work feeds past the tool. The rpm is related to the surface cutting speed V and the cutting tool diameter D, according to equation 24-1. The depth of cut is d, in inches, as shown in Figure 24-2b. The width of cut is W, in inches, and may be width of the workpiece or width of the cutter, depending on the setup. The length of cut is the length of the workpiece L plus an allowance L_A for approach and overtravel L_O, in inches. The feed rate of the table f_m, in inches per minute, is related to the amount of metal each tooth removes during a pass over the work, called the feed per tooth f_t, so $f_m = f_t N_s n$ where the number of teeth in the cutter is n. The cutting time is

$$T_m = \frac{L + L_A + L_O}{f_m} \text{ min} \tag{24-6}$$

The *metal removal rate* is

$$\text{MRR} - \frac{\text{volume}}{T_m} = \frac{LWd}{T_m} = f_m W d \text{ in.}^3/\text{min}$$

When calculating the MRR, ignore L_O and L_A. The length of approach is usually equal to the length of overtravel, which usually equals *D/2* in. For a setup where the tool does not completely pass over the workpiece,

$$L_O = L_A = \sqrt{W(D - W)} \text{ for } W < \frac{D}{2} \tag{24-7}$$

$$L_O = L_A = \frac{D}{2} \text{ for } W \geq \frac{D}{2} \tag{24-8}$$

FACE MILLING EXAMPLE

A 4-in.-diameter, six-tooth face mill is selected, using carbide inserts (Figure 24-3). The material being machined is low-alloy steel, annealed. Using cutting data recommendations, the cutting speed chosen is 400 sfpm with a feed of 0.008 in./tooth at a d of 0.12 inches. Determining rpm at the spindle,

$$N_s = \frac{12V}{\pi D} = \frac{12 \times 400}{3.14 \times 4} = 392 \text{ rpm}$$

Determining the feed rate of the table, $f_m = nN_s f_t$,

$$f_m = 0.008 \times 6 \times 392 = 19 \text{ in./min}$$

If slab or side milling were being performed, as shown in Figure 24-4, with the same parameters being selected as above, the setup would be different but the spindle rpm and table feed rate the same. The cutting time would be different because the allowances for face milling are greater than for slab milling. In milling, power consumption is usually the limiting factor. A thick chip is more power efficient than a thin chip.

END MILLING EXAMPLE

End milling is a very common operation performed on both vertical- and horizontal-spindle milling machines or machining centers. Figure 24-5 shows a vertical spindle end milling process, cutting a step in the workpiece. This cutter can cut on both the sides and ends of the tool. If you were performing this operation on a block of metal (for example, 430F stainless steel), you (the manufacturing engineer) would select a specific machine tool. You would have to determine how many passes (rough and finish cuts) were needed to produce the geometry specified in the design. Why? The number of passes determines the total cutting time for the job.

Using a vertical-spindle milling machine, an end mill can produce a step in the workpiece. In Figure 24-5, an end mill with six teeth on a 2-in. diameter is used to cut a step in

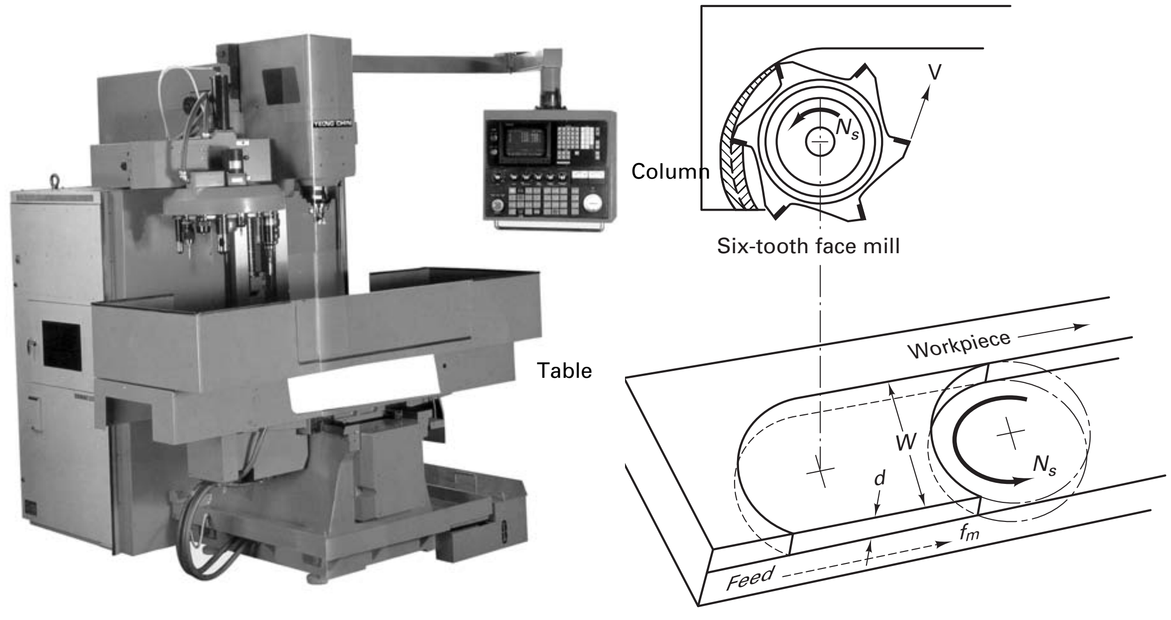

(a) Vertical-spindle milling machine

(b) Face milling over part of surface

Top views

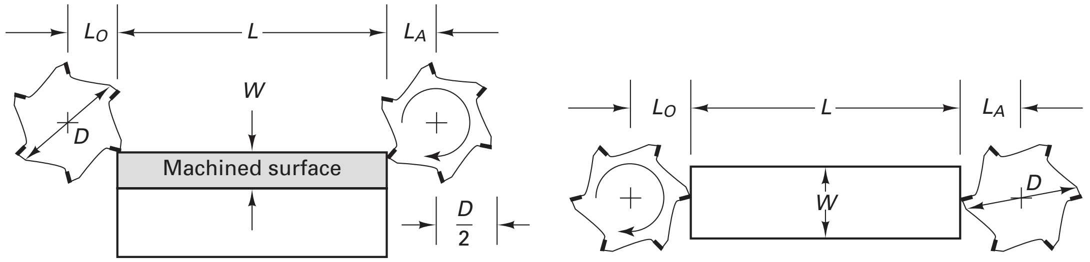

(c) Allowance for partial coverage

(d) Allowance for full coverage

FIGURE 24-2 Face milling is often performed on a spindle milling machine using a multiple-tooth cutter ($n = 6$ teeth) rotating N_s at rpm to produce cutting speed V. The workpiece feeds at rate f_m in inches per minute past the tool. The allowance depends on the tool diameter and the width of cut.

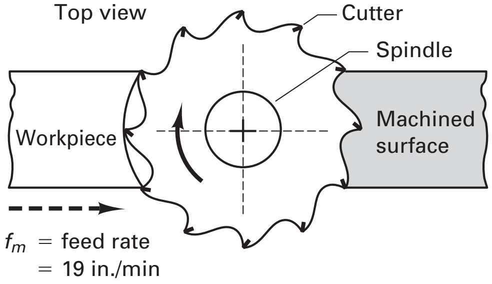

FIGURE 24-3 Face milling viewed from above with vertical spindle-machine.

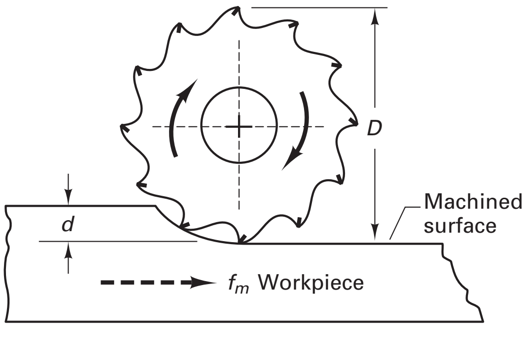

FIGURE 24-4 Slab or side milling being done as a down milling process with horizontal spindle-machine.

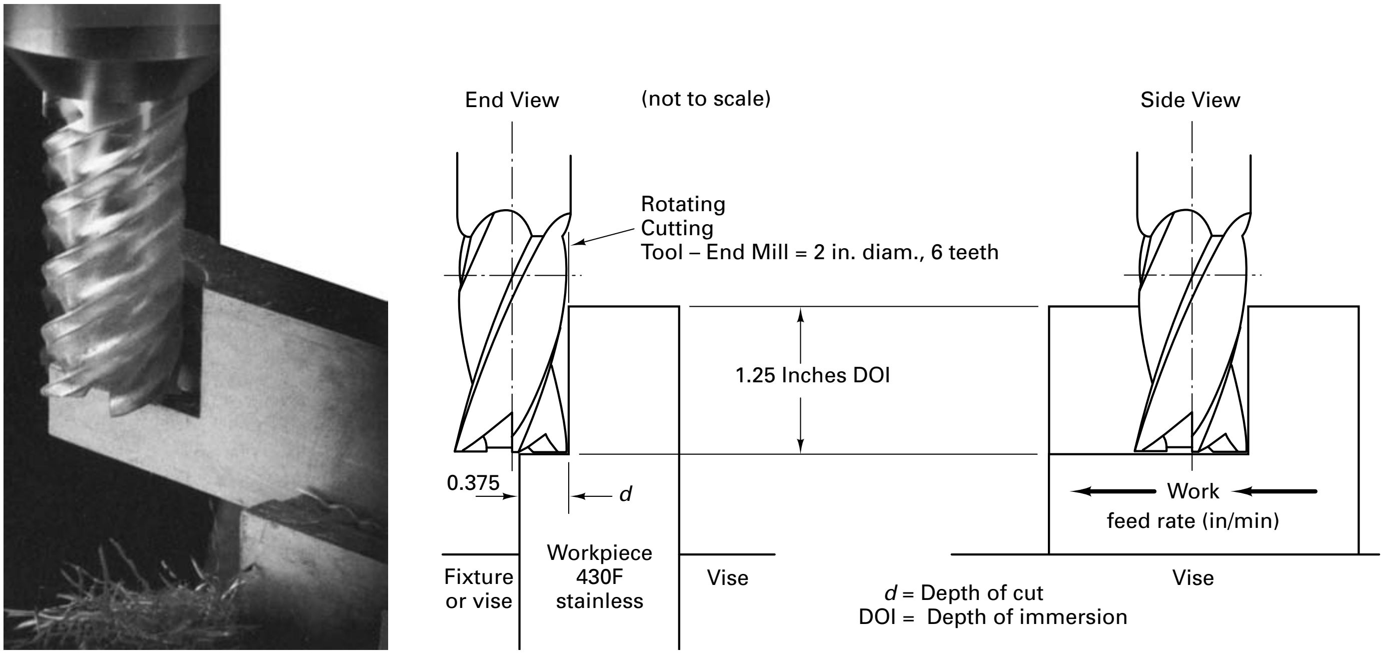

FIGURE 24-5 End milling a step feature in a block using a flat-bottomed, end mill cutter in a vertical spindle-milling machine. On left, photo. In middle, end view, table moving the block into the cutter. On right, side view, workpiece feeding right to left into tool.

430F stainless. The d (depth of cut) is 0.375 in., and the depth of immersion (DOI) is 1.25 in. The tool deflects due to the cutting forces, so the cut needs to be made at full immersion; but there may not be enough power for a full DOC. Can the step be cut in one pass or will multiple cuts be necessary? The vertical milling machine tool available has a 5-hp motor with an 80% efficiency. The specific horsepower for 430F stainless is 1.3 hp/in.^{3}/min.

The maximum amount of material that can be removed per pass is usually limited by the available power. Using the hp equation from Chapter 21,

$$\text{hp} = \text{HP}_s \times \text{MRR} = \text{HP}_s \times f_m W D = \text{HP}_s f_m \times \text{DOI} \times d \qquad (24\text{-}9)$$

Select $f_t = 0.005$ ipt and $V = 250$ fpm from Table 24-1. Calculate the spindle rpm:

$$N_s = \frac{12 \times 250}{3.14 \times 2} = 477 \text{ rpm of cutter}$$

Next, assuming the machine tool has this rpm available, calculate the table feed rate:

$$f_m = f_t \times n \times N_s = 0.005 \times 6 \times 477 = 14.31 \text{ in./min}$$

But the actual table feed rates for the selected machine are 11 in./min or 16 in./min, so, being conservative, select

$$f_m = \text{table feed rate} = 11.00 \text{ in./min}$$

Next, assuming 80% of the available power is used for cutting, calculate the depth of cut from equation 24-9:

$$d = \text{DOC} \cong \frac{5 \times 0.8}{1.3 \times 11.00 \times 1.25} \cong 0.225 \text{ in. maximum}$$

Therefore, two passes are needed because (0.375/0.225 = 1.6):

$$0.375 - 0.225 = 0.150 \text{ in. second pass DOC}$$

$$\begin{aligned} \text{2 passes: DOC} &= 0.225 \text{ rough cut} \\ \text{DOC} &= \underline{0.150} \text{ finish cut} \\ & 0.375 \text{ total DOC} \end{aligned}$$

Note that for $d = 0.150$, the feed per tooth would be only slightly increased to 0.0051 ipt:

$$f_t = \frac{0.5 \times 0.8}{1.3 \times 6 \times 477 \times 0.150 \times 1.25} = 0.0051 \text{ in./tooth}$$

You may want to change f_t to improve the surface finish. With a smaller f_t, a better surface finish is usually obtained. However, there are other factors to consider, like machining time.

In general (for face, slab, or end milling), if machine power is lacking the following actions may help.

1. Use a cutter with a positive rake as this can be more efficient than one with a negative rake.
2. Use a cutter with a coarser pitch (fewer teeth).
3. Use a smaller cutter and take several passes (reduce *d* or DOI).

UP VERSUS DOWN MILLING

For either slab or end or face milling, surfaces can be generated by two distinctly different methods (Figure 24-6). *Up milling* is the traditional way to mill and is called *conventional* milling. The cutter rotates against the direction of feed of the workpiece. In *climb* or *down milling*, the cutter rotation is in the same direction as the feed rate. The method of chip formation is completely different in the two cases.

In up milling, the chip is very thin at the beginning, where the tooth first contacts the work; then it increases in thickness, becoming a maximum where the tooth leaves the work. The cutter tends to push the work along and lift it upward from the table. This action tends to eliminate any effect of looseness in the feed screw and nut of the milling machine table and results in a smooth cut. However, the action tends to loosen the work from the fixture. Therefore, greater clamping forces must be employed, with the danger of deflecting the part. In addition, the smoothness of the generated surface depends greatly on the sharpness of the cutting edges. In up milling, chips can be carried into the newly machined surface, causing the surface finish to be poorer (rougher) than in down milling and causing damage to the insert.

In down milling, maximum chip thickness occurs close to the point at which the tooth contacts the work. Because the relative motion tends to pull the workpiece into the cutter, any possibility of looseness in the table feed screw must be eliminated if down

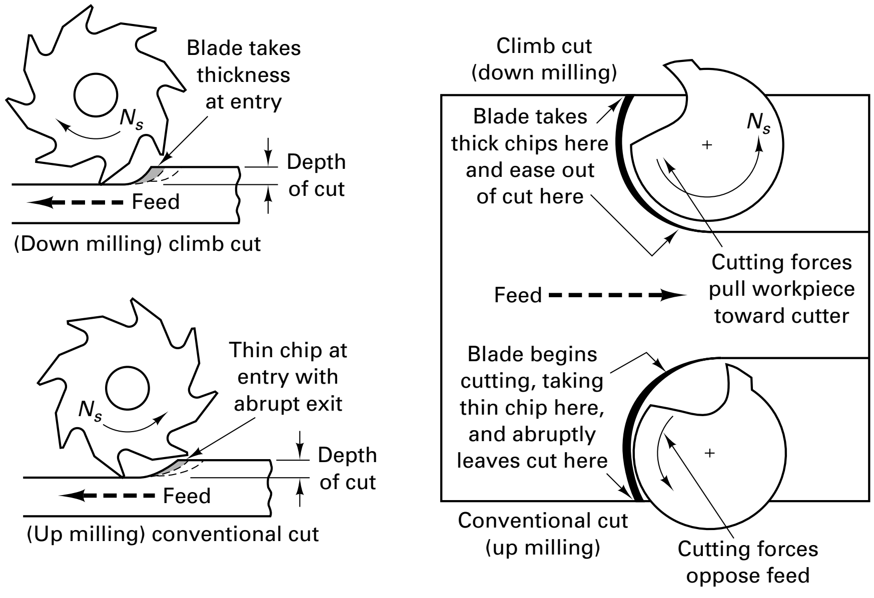

FIGURE 24-6 Climb cut or down milling versus conventional cut or up milling for slab or face or end milling.

Peripherial or slab milling

Face or end milling

milling is to be used. It should never be attempted on machines that are not designed for this type of milling. Virtually all modern milling machines are capable of down milling, and it is a most favorable application for carbide cutting edges. Because the material yields in approximately a tangential direction at the end of the tooth engagement, there is less tendency (than when up milling is used) for the machined surface to show toothmarks, and the cutting process is smoother, with less chatter. Another advantage of down milling is that the cutting force tends to hold the work against the machine table, permitting lower clamping forces. However, the fact that the cutter teeth strike against the surface of the work at the beginning of each chip can be a disadvantage if the workpiece has a hard surface, as castings sometimes do. This may cause the teeth to dull rapidly. Metals that readily workharden should be down milled, and many toolmakers recommend that down milling should always be the first choice.

MILLING SURFACE FINISH

The average surface finishes that can be expected on free-machining materials range from 60 to 150 μin. Conditions exist, however, that can produce wide variations on either side of these ranges. For example, some inserts are designed with wiper flats (short parallel surface behind the tool tip). If the feed per revolution [feed per tooth × number of teeth] of the cutter is smaller than the length of the wiper flat (the land on the tool), then the surface finish on the workpiece will be generated by the highest insert. In finishing cuts, keeping the depth of cut small will limit the axial cutting force, reducing vibrations and producing a superior finish. See Chapter 35 for discussions on measuring surface finish.

Milling is an interrupted cutting process wherein entering and leaving the cut subjects the tool to impact loading, cyclic heating, and cycle cutting forces. As shown in Figure 24-7, the cutting force, F_c, builds rapidly as the tool enters the work at A and progresses to B, peaks as the blade crosses the direction of feed at C, decreases to D, and then drops to zero abruptly upon exit. The diagram does not indicate the impulse loads caused by impacts. The interrupted-cut phenomenon explains in large part why milling cutter teeth are designed to have small positive or negative rakes, particularly when the tool material is carbide or ceramic. These brittle materials tend to be very strong in compression, and negative rake results in the cutting edges being placed in compression by the cutting forces rather than tension. Cutters made from high-speed steel (HSS) are made with positive rakes, in the main, but must be run at lower speeds. Positive rake tends to lift the workpiece, while negative rakes compress the workpiece and allow heavier cuts to be made. Table 24-2 summarizes some additional milling problems.

■ 24.3 MILLING TOOLS AND CUTTERS

Most milling work today is done with face mills and end mills. The face mills use indexable carbide insert tooling, while the end mills are either solid HSS or insert tooling (Figure 24-8). Basically, *mills* are shank-type cutters having teeth on the circumferential surface and one end. They thus can be used for facing, profiling, and end milling. The teeth

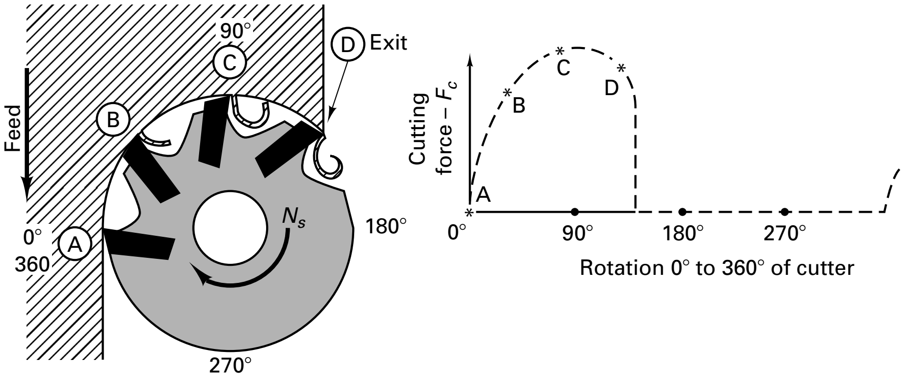

FIGURE 24-7 Conventional face milling (left) with cutting force diagram for F_c (right) showing the interrupted nature of the process. *(From* Metal Cutting Principles, *2nd ed., Ingersoll Cutting Tool Company.)*

TABLE 24-2 Probable Causes of Milling Problems

Problem	Probable Cause	Cures
Chatter (vibration)	1. Lack of rigidity in machine, fixtures, arbor, or workpiece	Use larger arbors. Change rpm (cutting speed).
	2. Cutting load too great	Decrease feed per tooth or number of teeth in contact with work.
	3. Dull cutter	Sharpen or replace inserts.
	4. Poor lubrication	Flood coolant.
	5. Straight-tooth cutter	Use helical cutter.
	6. Radial relief too great	
	7. Rubbing, insufficient clearance	Check tool angles.
Loss of accuracy (cannot hold size)	1. High cutting load causing deflection	Decrease number of teeth in contact with work or feed per tooth.
	2. Chip packing, between teeth	Adjust cutting fluid to wash chips out of teeth.
	3. Chips not cleaned away before mounting new piece of work	
Cutter rapidly dulls	1. Cutting load too great	Decrease feed per tooth or number of teeth in contact.
	2. Insufficient coolant	Add blending oil to coolant.
Poor surface finish	1. Feed too high	Check to see if all teeth are set at same height.
	2. Tool dull	
	3. Speed too low	
	4. Not enough cutter teeth	
Cutter digs in (hogs into work)	1. Radial relief too great	Check to see that workpiece is not deflecting and is securely clamped.
	2. Rake angle too large	
	3. Improper speed	
Work burnishing	1. Cut is too light	Enlarge feed per tooth.
	2. Tool edge worn	Sharpen cutter.
	3. Insufficient radial relief	
	4. Land too wide	
Cutter burns	1. Not enough lubricant	Add sulfur-based oil.
	2. Speed too high	Reduce cutting speed. Flood coolant.
Teeth breaking	1. Feed too high	Decrease feed per tooth.
	2. Depth of cut too large	Use cutter with more teeth. Reduce table feed rate.

Adapted from *Cutting Tool Engineering*, October 1990, p. 90, by Peter Liebhold, museum specialist, Division of Engineering and Industry, the Smithsonian Institute, Washington, DC.

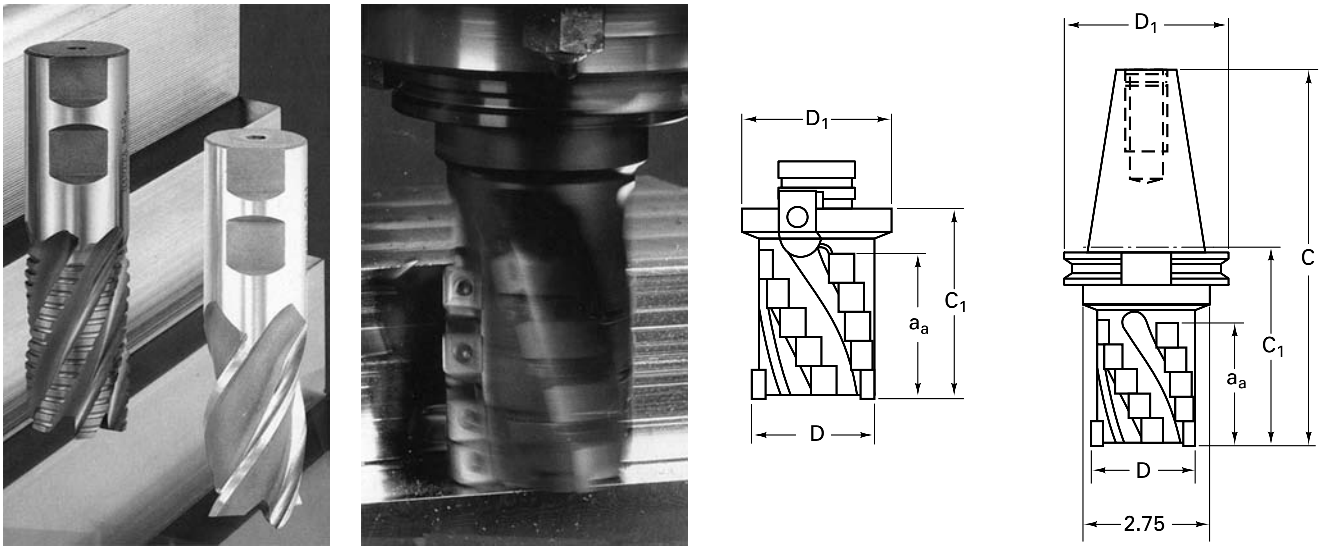

FIGURE 24-8 Solid end mills are often coated. Insert tooling end mills come in a variety of sizes and are mounted on taper shanks.

may be either straight or helical, but the latter is more common. Small end mills have straight shanks, whereas taper shanks are used on larger sizes (Figure 24-8).

Plain end mills have multiple teeth that extend only about halfway toward the center on the end. They are used in milling slots, profiling, and facing narrow surfaces. *Two-lip mills* have two straight or helical teeth that extend to the center. Thus they may be sunk into material, like a drill, and then fed lengthwise to form a groove, a slot, or a pocket.

Shell end mills are solid multiple-tooth cutters, similar to plain end mills but without a shank. The center of the face is recessed to receive a screw head or nut for mounting the cutter on a separate shank or a stub arbor. One shank can hold any of several cutters and thus provides great economy for larger-sized end mills.

Hollow end mills are tubular in cross section, with teeth only on the end but having internal clearance. They are used primarily on automatic screw machines for sizing cylindrical stock, producing a short cylindrical surface of accurate diameter.

Face mills have a center hole so that they can be arbor mounted. Face milling cutters are widely used in both horizontal- and vertical-spindle machine tools and come in a wide variety of sizes (diameters and heights) and geometries (round, square, triangular, etc.), as shown in Figure 24-9.

The insert can usually be indexed four times and must be well supported. Either the power or the rigidity of the machine tool will be the limiting factor, although sometimes setup can be the limiting factor.

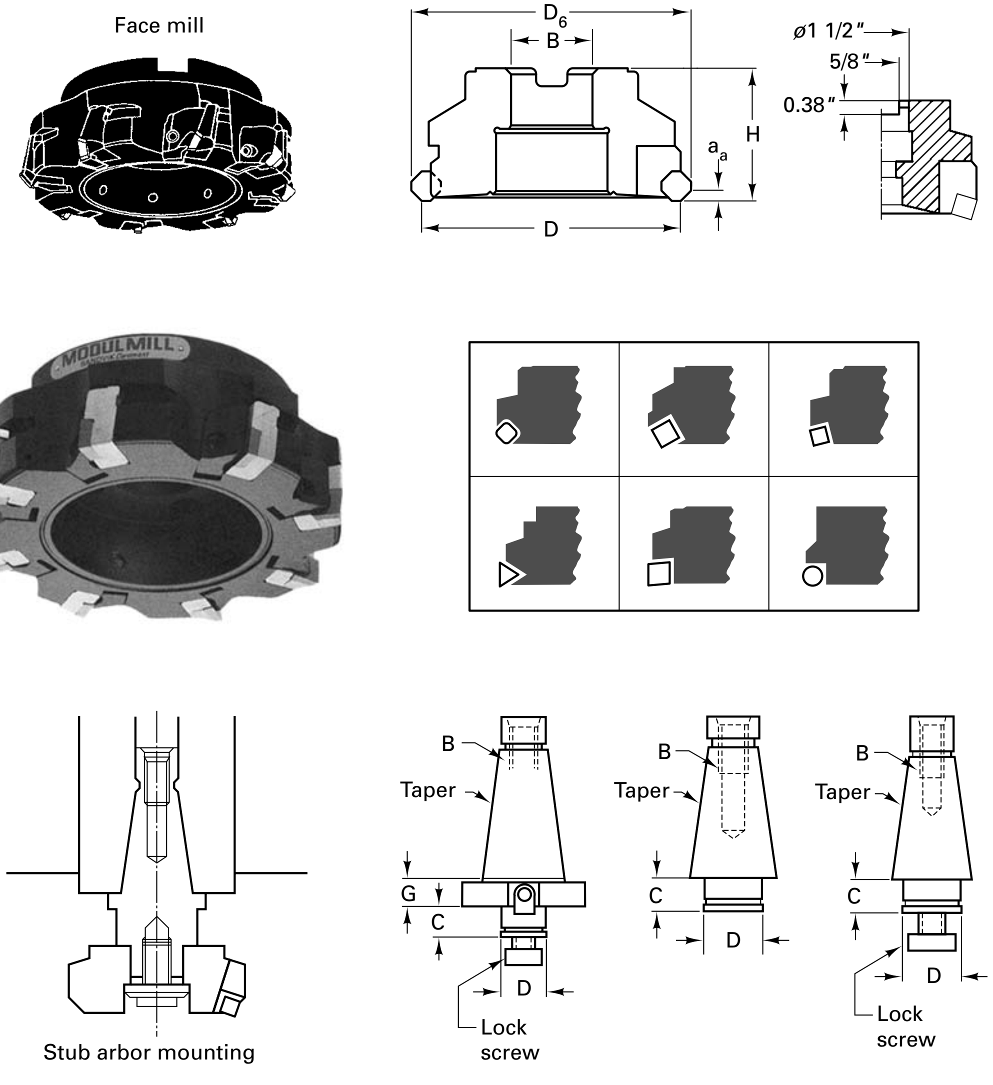

FIGURE 24-9 Face mills come in many different designs using many different insert geometries and different mounting arbors.

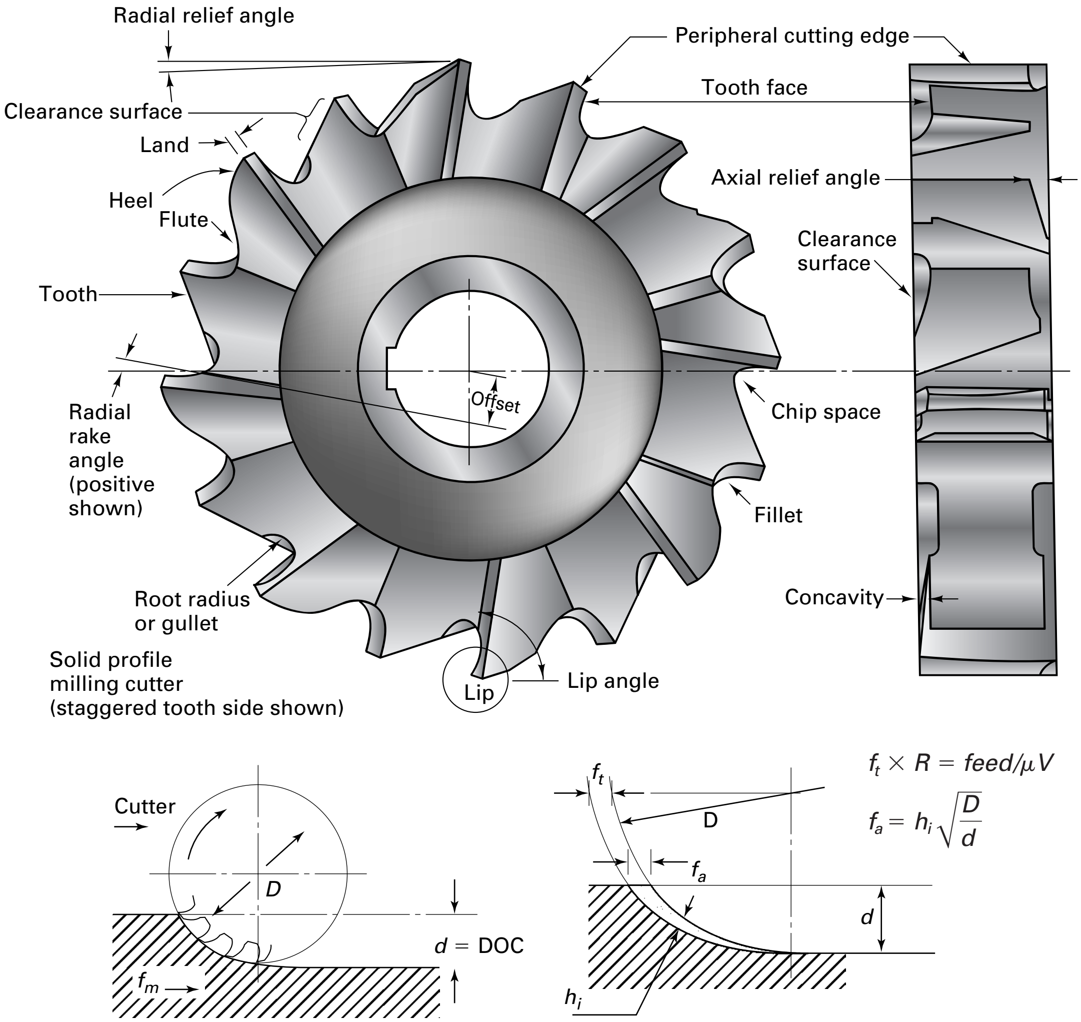

FIGURE 24-10 The side-milling cutter can cut on sides and ends of the teeth, so it makes slots or grooves. However, only a few teeth are engaged at any one point in time, causing heavy torsional vibrations. The average chip thickness, h_i, will be less than the feed per tooth, f_t. The actual feed per tooth f_a will be less than feed per tooth selected, F_t, according to $f_a = h_i\sqrt{\frac{D}{d}}$.

Another common type of arbor-mounted milling cutter is called a side mill because it cuts on the ends and sides of the cutters. Figure 24-10 shows the geometry of a staggered-tooth side milling cutter.

Staggered-tooth milling cutters are narrow cylindrical cutters having staggered teeth, and with alternate teeth having opposite helix angles. They are ground to cut only on the periphery, but each tooth also has chip clearance ground on the protruding side. These cutters have a free cutting action that makes them particularly effective in milling deep slots. *Staggered-tooth cutters* are really special *side-milling cutters*, which are similar to plain milling cutters except that the teeth extend radially part way across one or both ends of the cylinder toward the center. The teeth may be either straight or helical. Frequently, these cutters are relatively narrow, being disklike in shape. Two or more side milling cutters often are spaced on an arbor to straddle the workpiece (called *straddle milling*), and two or more parallel surfaces are machined at once.

In Figure 24-11 insert-tooth side mills are arranged in a gang-milling setup to cut three slots in the workpiece simultaneously. Thus the desired part geometry is repeatedly produced by the setup as the position of the cutters is fixed. However, in side- and face-milling operations only a few teeth are engaged at any point in time, resulting in heavy torsional vibrations detrimental to the resulting machined product. A flywheel can solve this problem and in many cases be the key to improved productivity.

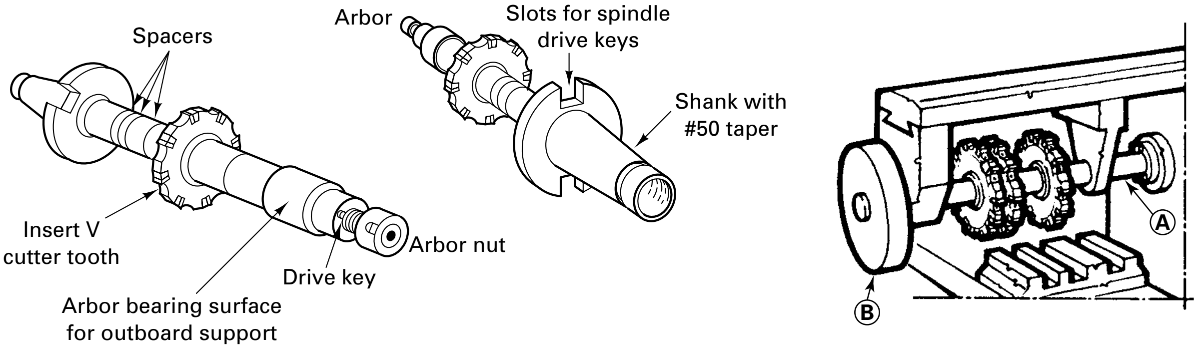

FIGURE 24-11 Arbor (two views) used on a horizontal-spindle milling machine on left. On right, a gang-milling setup showing three side-milling cutters mounted on an arbor (A) with an outboard flywheel (B).

For the gang milling as shown in Figure 24-11 the diameter of the flywheel should be as large as possible. (The moment of inertia increases with the square of the radius.) The best position of the flywheel is inboard on the arbor at A, but depending on the setup, this may not be possible, so then position B should be chosen. It is important that the distance between the cutters and flywheel be as small as possible.

A flywheel can be built up from a number of carbon steel disks, each having a center hole and keyway to fit the arbor, so the weight can be easily varied.

Interlocking slotting cutters consist of two cutters similar to side mills but made to operate as a unit for milling slots. The two cutters are adjusted to the desired width by inserting shims between them.

Slitting saws are thin, plain milling cutters, usually from $^1/_{32}$ to $^3/_{16}$ in. thick, which have their sides slightly "dished" to provide clearance and prevent binding. They usually have more teeth per unit of diameter than ordinary plain milling cutters and are used for milling deep narrow slots and cutting-off operations.

In milling, the average chip thickness (h_i) is not the same as the feed per tooth. For example, a thickness (h_i) of 0.004 in. corresponds to 0.012 in. feed per tooth in most side and face milling operations.

If the radial depth of cut, d, is very small compared to the cutter diameter, D, use this formula:

$$\text{feed per tooth} = f_t = 0.004\sqrt{\frac{D}{d}}\ (\text{ipt})$$

(*Note:* For calculating the table feed, use half the number of inserts in a full side and face mill to arrive at the effective number of teeth.)

$$\text{table feed rate (ipm)} = \text{rpm} \times \text{number of effective teeth} \times \text{feed per tooth}$$

Another method of classification for face and end mill cutters relates to the direction of rotation. A *right-hand cutter* must rotate counterclockwise when viewed from the front end of the machine spindle. Similarly, a *left-hand cutter* must rotate clockwise. All other cutters can be reversed on the arbor to change them from one hand to the other. Positive rake angles are used on general-purpose HSS milling cutters. Negative rake angles are commonly used on carbide- and ceramic-tipped cutters employed in mass-production milling in order to obtain the greater strength and cooling capacity. TiN coating of these tools is quite common, resulting in significant increases in tool life.

Plain milling cutters used for plain or slab milling have straight or helical teeth on the periphery and are used for milling flat surfaces. *Helical mills* (Figure 24-12) engage the work gradually, and usually more than one tooth cuts at a given time. This reduces shock and chattering tendencies and promotes a smoother surface. Consequently, this type of cutter usually is preferred over one with straight teeth.

Angle milling cutters are made in two types: single angle and double angle. Angle cutters are used for milling slots of various angles or for milling the edges of workpieces to a desired angle. *Single-angle cutters* have teeth on the conical surface, usually at an

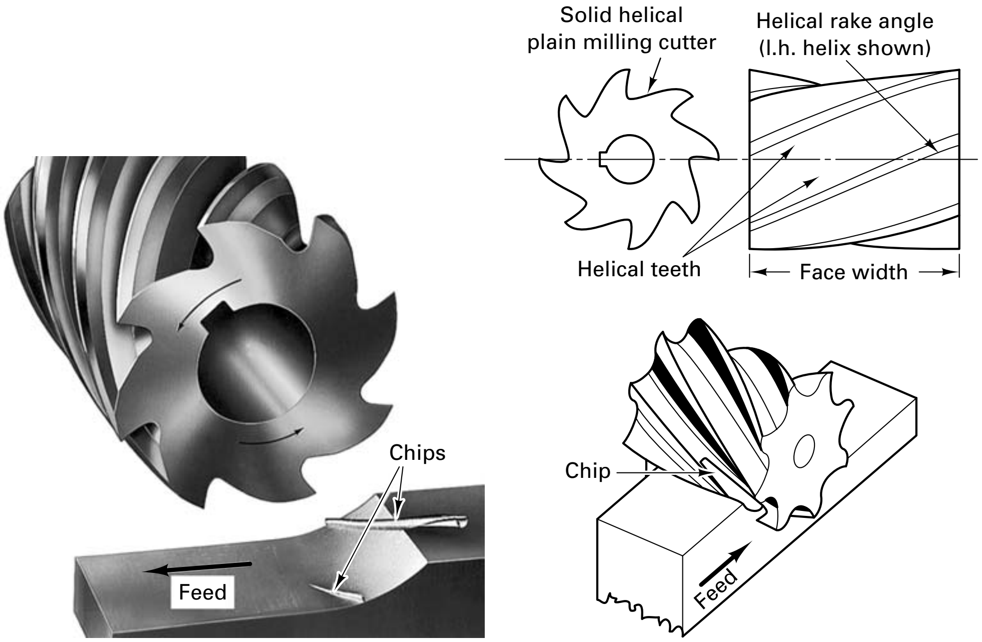

FIGURE 24-12 The chips are formed progressively by the teeth of a plain helical-tooth milling cutter during up milling.

angle of 45° to 60° to the plane face. *Double-angle cutters* have V-shaped teeth, with both conical surfaces at an angle to the end faces but not necessarily at the same angle. The V-angle usually is 45°, 60°, or 90°.

Form milling cutters have the teeth ground to a special shape—usually an irregular contour—to produce a surface having a desired transverse contour. They must be sharpened by grinding only the tooth face, thereby retaining the original contour as long as the plane of the face remains unchanged with respect to the axis of rotation. Convex, concave, corner-rounding, and gear-tooth cutters are common examples (Figure 24-13). Solid HSS cutters of simple shape and reasonably small size are usually more economical in initial cost than inserted-blade cutters. However, inserted-blade cutters may be lowest in overall cost on large production jobs.

Form-relieved cutters can be cost effective where intricately shaped cuts are needed. Solid or carbide insert tool cutters may need large volumes to be cost-justified by high-production requirements.

Most larger-sized milling cutters are of the *inserted-tooth type*. The cutter body is made of steel, with the teeth made of high-speed steel, carbides, or TiN carbides, fastened to the body by various methods. An insert tooth cutter uses indexable carbide or ceramic inserts, as shown in Figure 24-9. This type of construction reduces the amount of costly material that is required and can be used for any type of cutter, but it is most often used with face mills.

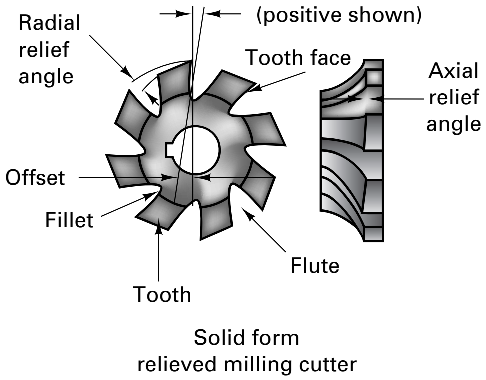

FIGURE 24-13 Solid form relieved milling cutter, would be mounted on an arbor in a horizontal milling machine.

T-slot cutters are integral-shank cutters with teeth on the periphery and *both* sides. They are used for milling the wide groove of a T-slot. To use them, the vertical groove must first be made with a slotting mill or an end mill to provide clearance for the shank. Because the T-slot cutter cuts on five surfaces simultaneously, it must be fed with care.

Woodruff keyseat cutters are made for the single purpose of milling the semicylindrical seats required in shafts for Woodruff keys. They come in standard sizes corresponding to Woodruff key sizes. Those below 2 in. in diameter have integral shanks; the larger sizes may be arbor mounted.

Occasionally, *fly cutters* may be used for face milling or boring. Both operations may be done with a single tool at one setup. A single-point cutting tool is attached to a special shank, usually with provision for adjusting the effective radius of the cutting tool with respect to the axis of rotation. The cutting edge can be made in any desired shape and, because it is a single-point tool, is very easy to grind.

24.4 MACHINES FOR MILLING

The four most common types of manually controlled milling machines are listed below in order of increasing power (and therefore metal removal capability):

1. Ram-type milling machines
2. Column-and-knee-type milling machines
   a. Horizontal spindle
   b. Vertical spindle
3. Fixed-bed-type milling machines
4. Planer-type milling machines

Milling machines whose motions are electronically controlled are listed in order of increasing production capacity and decreasing flexibility:

1. Manual data input milling machines
2. Programmable CNC milling machines
3. Machining centers (tool changer and pallet exchange capability)
4. Flexible Manufacturing Cell and Flexible Manufacturing System
5. Transfer lines

BASIC MILLING MACHINE CONSTRUCTION

Most basic milling machines are of *column-and-knee* construction, employing the components and motions shown in Figure 24-14. The column, mounted on the base, is the main supporting frame for all the other parts and contains the spindle with its driving mechanism. This construction provides controlled motion of the worktable in three mutually perpendicular directions: (1) through the *knee*, moving vertically on ways on the front of the column; (2) through the *saddle*, moving transversely on ways on the knee; and (3) through the *table*, moving longitudinally on ways on the saddle. All these motions can be imparted by either manual or powered means. In most cases, a powered rapid traverse is provided in addition to the regular feed rates for use in setting up work and in returning the table at the end of a cut.

The ram-type milling machine is one of the most versatile and popular milling machines, using the knee and column design. Ram-type machines have a head equipped with a motor-stopped pulley and belt drive as well as a spindle. The ram, mounted on horizontal ways at the top of the column, supports the head and permits positioning of the spindle with respect to the table. Ram-type milling machines are normally 10 hp or less and suitable for light-duty milling, drilling, reaming, and so on (Figure 24-15).

Milling machines having only the three mutually perpendicular table motions are called *plain column-and-knee type*. These are available with both horizontal and vertical spindles (Figure 24-14). On the older horizontal-spindle-type machines, an adjustable overarm provides an outboard bearing support for the end of the cutter arbor, which is shown in Figure 24-11. These machines are well suited for slab, side, or straddle milling.

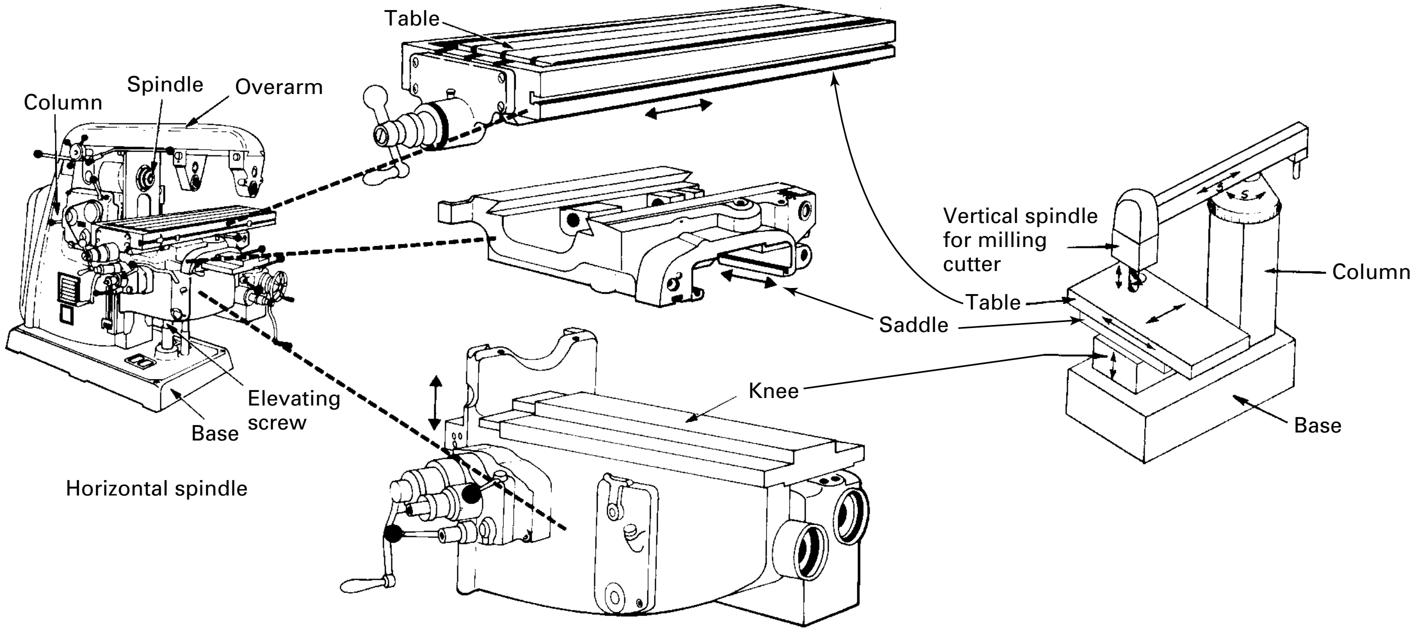

FIGURE 24-14 Major components of a plain column-and-knee-type milling machine, which can have horizontal spindle shown on the left, or a turret type machine with a vertical spindle, shown on the right. The workpiece and workholder on the table can be translated in *X, Y,* and *Z* directions with respect to the tool.

In some vertical-spindle machines the spindle can be fed up and down, either by power or by hand. Vertical-spindle machines are especially well suited for face and end milling operations. They also are very useful for drilling and boring, particularly where holes must be spaced accurately in a horizontal plane, because of the controlled table motion.

Turret-type column-and-knee milling machines have dual heads that can be swiveled about a horizontal axis on the end of a horizontally adjustable ram. This permits milling to be done horizontally, vertically, or at any angle. This added flexibility is advantageous when a variety of work has to be done, as in tool and die or experimental shops. They are available with either plain or universal tables.

Universal column-and-knee milling machines differ from plain column-and-knee machines in that the table is mounted on a housing that can be swiveled in a horizontal plane, thereby increasing its flexibility. Helices, as found in twist drills, milling cutters, and helical gear teeth, can be milled on universal machines.

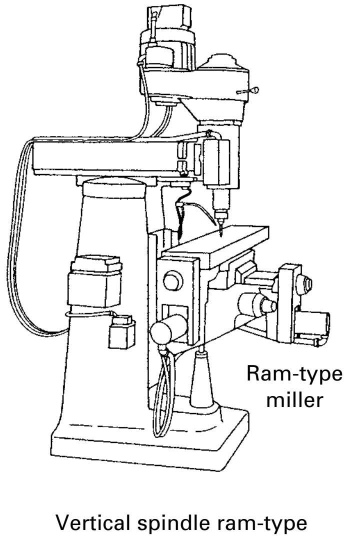

FIGURE 24-15 The ram-type knee-and-column milling machine is one of the most versatile and popular milling machine tools ever designed.

BED-TYPE MILLING MACHINES

In production manufacturing operations, ruggedness and the capability of making heavy cuts are of more importance than versatility. *Bed-type milling machines* (Figure 24-16) are made for these conditions. The table is mounted directly on the bed and has only longitudinal motion. The spindle head can be moved vertically in order to set up the machine for a given operation. Normally, once the setup is completed, the spindle head is clamped in position and no further motion of it occurs during machining. However, on some machines vertical motion of the spindle occurs during each cycle.

After such milling machines are set up, little skill is required to operate them, permitting faster learning time for the operators. Some machines of this type are equipped with automatic controls so that all the operator has to do is load and unload workpieces into the fixture and set the machine into operation. For stand-alone machines, a fixture can be located at each end of the table so that one workpiece can be loaded while another is being machined.

Bed-type milling machines with single spindles are sometimes called *simplex milling machines*; they are made with both horizontal and vertical spindles. Bed-type machines also are made in *duplex* and *triplex* types, having two or three spindles respectively, permitting the simultaneous milling of two or three surfaces at a single pass.

PLANER-TYPE MILLING MACHINES

Planer-type milling machines (Figure 24-17) utilize several milling heads, which can remove large amounts of metal while permitting the table and workpiece to feed quite slowly. Often only a single pass of the workpiece past the cutters is required. Through the use of different types of milling heads and cutters, a wide variety of surfaces can be machined with a single setup of the workpiece. This is an advantage when heavy workpieces are involved.

ROTARY-TABLE MILLING MACHINES

Some types of face milling in mass-production manufacturing are often done on *rotary-table milling machines*. Roughing and finishing cuts can be made in succession as the workpieces are moved past the several milling cutters while held in fixtures on the rotating table. The operator can load and unload the work without stopping the machine.

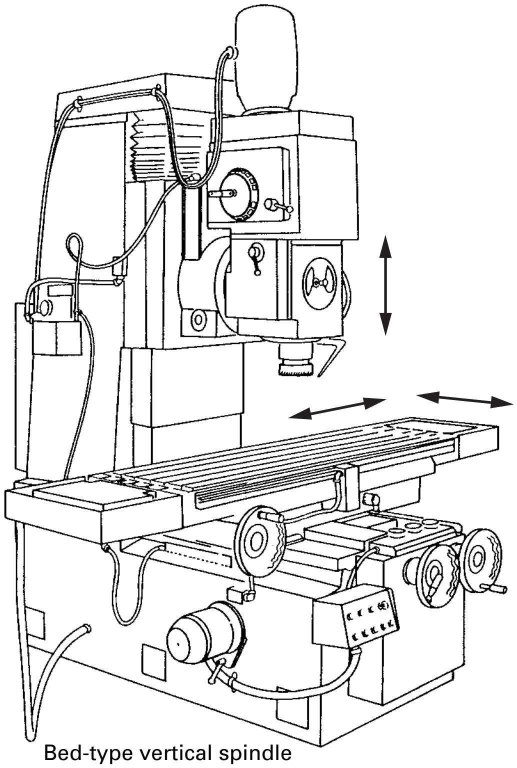

FIGURE 24-16 Bed-type vertical-spindle heavy-duty production machine tools for milling usually have three axes of motion.

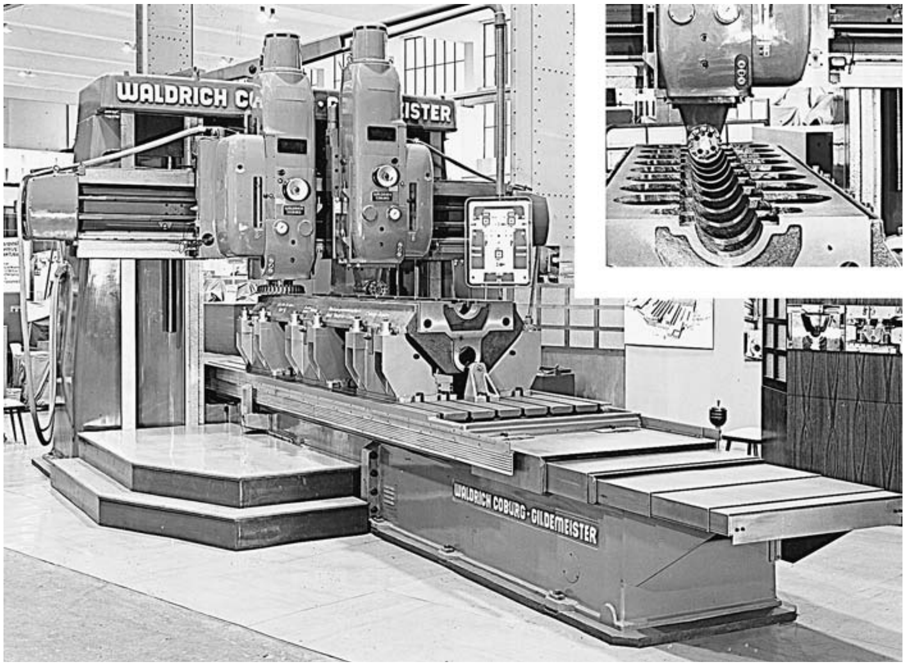

FIGURE 24-17 Large planer-type milling machine. Inset shows 90° head being used. *(Courtesy of Cosa Corporation.)*

PROFILERS AND DUPLICATORS

Milling machines that can duplicate external or internal geometries in two dimensions are called *profilers* or tracer-controlled machines. A tracing probe follows a two-dimensional pattern or template and, through electronic or hydraulic air-actuated mechanisms, controls the cutting spindles in two mutually perpendicular directions.

All hydraulic tracers work basically the same way, in that they utilize a stylus connected to a precision servomechanism for each axis of control. The servos are connected to hydraulic actuators on the machine slides. As the stylus traces a template, the servos control the motion of the slides so that the milling cutter duplicates the template shape onto the workpiece.

Duplicators produce forms in three dimensions and are widely used to machine molds and dies. Sometimes these machines are called *die-sinking machines*. They are used extensively in the aerospace industry to machine parts from wrought plate or bar stock as substitutes for forgings when the small number of parts required would make the cost of forging dies uneconomical. Many of these kinds of jobs are now done on NC- and CNC-type machines; their applications are discussed in Chapters 26.

MILLING MACHINE SELECTION

When purchasing or using a milling machine, consider the following issues:

1. Spindle orientation and rpm
2. Machine capability (accuracy and precision)
3. Machine capacity (size of workpieces)
4. Horsepower available at spindle (usually 70% of machine horsepower)
5. Automatic tool changing

The choice of spindle orientation, horizontal or vertical, depends on the parts to be machined. Relatively flat parts are usually done on vertical machines. Cubic parts are usually done on a horizontal machine, where chips tend to fall free of the part. Operations like slotting and side milling are best done on horizontal machines with outboard supports for the arbor. Use the largest-diameter arbor possible to reduce twist and deflection due to cutting forces.

Machine capability refers to the tolerances, while *capacity* refers to the size of parts and the power available.

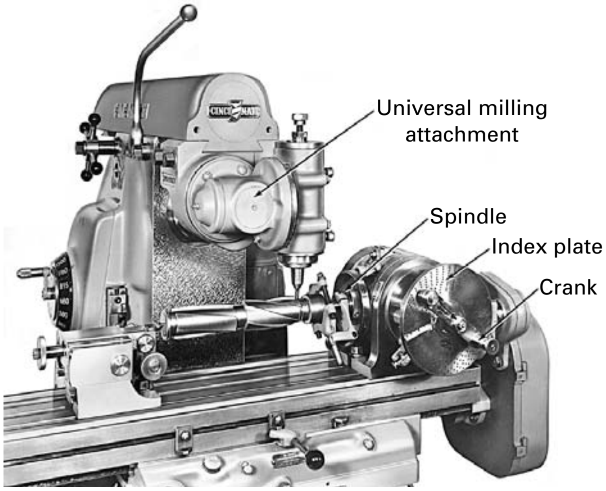

FIGURE 24-18 End milling a helical groove on a horizontal-spindle milling machine using a universal dividing head and a universal milling attachment. *(Courtesy of Cincinnati Milacron, Inc.)*

As with all tooling applications, the tolerances that can be maintained in milling are dependent upon the rigidity of the workpiece, the accuracy and rigidity of the machine spindle, the precision and accuracy of the workholding device, and the quality of the cutting tool itself. Milling produces forces that contribute to chatter and vibration because of the intermittent cutting action. Soft materials tend to adhere to the cutter teeth and make it more difficult to hold tolerances. Materials such as cast iron and aluminum are easy to mill.

Within these criteria, properly maintained cutters used in rigid spindles on properly fixtured workpieces can expect to machine within tolerances with surface flatness tolerances of 0.001 in./ft. Such tolerances are also possible on "slotting" operations with milling cutters, but $+0.001$ in. to $+0.002$ in. is more probable. Flatness specifications are more difficult to maintain in steel and easier to maintain in some types of aluminum, cast iron, and other nonferrous material.

Part size is the primary factor in selecting the machine size, but the length of the tooling as mounted in the spindle must be considered. Horsepower required at the spindle depends on the MRR and the materials (unit horsepower, hp_s). Remember, coated inserts allow the MRR (the cutting speed) to be increased and available power may be exceeded.

Finally, the capacity of the tool changers on machining centers is limited by the number, size, and weight of the tools, especially if large-diameter tools are being employed. These often have to be stored in every other space in the storage mechanism.

ACCESSORIES FOR MILLING MACHINES

The usefulness of ordinary milling machines can be greatly extended by employing various accessories or attachments. Here are some examples.

A horizontal milling machine can be equipped with a vertical milling attachment to permit vertical milling to be done. Ordinarily, heavy cuts cannot be made with such an attachment.

The *universal milling attachment* (Figure 24-18) is similar to the vertical attachment but can be swiveled about both the axis of the milling machine spindle and a second, perpendicular axis to permit milling to be done at any angle.

The *universal dividing head* is by far the most widely used milling machine accessory, providing a means for holding and indexing work through any desired arc of rotation. The work may be mounted between centers (Figure 24-18) or held in a chuck that is mounted in the spindle hole of the dividing head. The spindle can be tiled from about 5° below horizontal to beyond the vertical position.

Basically, a dividing head is a rugged, accurate, 40:1 worm-gear reduction unit. The spindle of the dividing head is rotated one revolution by turning the input crank 40 turns. An index plate mounted beneath the crank contains a number of holes, arranged in concentric circles and equally spaced, with each circle having a different number of holes. A plunger pin on the crank handle can be adjusted to engage the holes of any circle. This permits the crank to be turned an accurate, fractional part of a complete circle as represented by the increment between any two holes of a given circle on the index plate. Utilizing the 40:1 gear ratio and the proper hole circle on the index plate, the spindle can be rotated a precise amount by the application of either of the following rules:

$$\text{number of turns of crank} = \frac{40}{\text{cuts per revolution of work}}$$

$$\text{holes to be indexed} = \frac{40 \times \text{holes index circle}}{\text{cuts per revolution of work}}$$

If the first rule is used, an index circle must be selected that has the proper number of holes to be divisible by the denominator of any resulting fractional portion of a turn of the crank. In using the second rule, the number of holes in the index circle must be such that the numerator of the fraction is an even multiple of the denominator. For example, if 24 cuts are to be taken about the circumference of a workpiece, the number of turns of the crank required would be $1^{2}/_{3}$. An index circle having 12 holes could be used with one full turn plus eight additional holes. The second rule would give the same result. Adjustable *sector arms* are provided on the index plate that can be set to a desired number of holes, less than a full turn, so that fractional turns can be made readily without the necessity for counting holes each time. Dividing heads are made having ratios other than 40:1. The ratio should be checked before using.

Because each full turn of the crank on a standard dividing head represents 360/40, or 9° of rotation of the spindle, indexing to a fraction of a degree can be obtained. Indexing can be done in three ways. *Plain indexing* is done solely by the use of the 40:1 ratio in the dividing head. In *compound indexing*, the index plate is moved forward or backward a number of hole spaces each time the crank handle is advanced. For *differential indexing* the spindle and the index plate are connected by suitable gearing so that as the spindle is turned by means of the crank, the index plate is rotated a proportional amount.

The dividing head can also be connected to the feed screw of the milling machine table by means of gearing. This procedure is used to provide a definite rotation of the workpiece with respect to the longitudinal movement of the table, as in cutting helical gears. This procedure is illustrated in Chapter 29.

■ Key Words

climb (down) milling
column-and-knee milling machine
conventional (up) milling
cutting time
end milling
face milling
insert-tooth milling cutter
interrupted cutting
machining center
metal removal rate
milling
milling cutters
milling machines
peripheral milling
slab milling
staggered-tooth milling cutter
straddle milling
Woodruff keyseat

■ Review Questions

1. Suppose you wanted to machine a cast iron with BHN of 275. The process to be used is face milling and an HSS cutter is going to be used. What feed and speed values would you select?
2. Explain how table feed (ipm) and spindle rpm are specified or computed for a milling machine after speed and feed per tooth are selected.
3. Why must the number of teeth on the cutter be known when calculating milling machine table feed, in in./min?
4. Why is the question of up or down milling more critical in horizontal slab milling than in vertical-spindle (end or face) milling?
5. For producing flat surfaces in mass production machining, how does face milling differ basically from peripheral milling?
6. Milling has a higher metal removal rate than planing. Why?
7. Which type of milling (up or down) is being done in Figures 24-1, Figure 24-2, and 24-7?
8. Why does down milling dull the cutter more rapidly than up milling when machining sand castings?
9. What parameters do you need to specify in order to calculate MRR in milling?
10. In Figure 24-2b the tool material is carbide. What would you change in the process?

11. What is the advantage of a helical-tooth cutter over a straight-tooth cutter for slab milling?
12. What would the cutting force diagram for F_c look like if the cutter were performing climb milling?
13. Could the stub arbor–mounted face mill shown in Figure 24-9 be used to machine a T-slot? Why or why not?
14. In a typical solid arbor milling cutter shown in Figure 24-10, why are the teeth staggered? (Check in Chapter 19 for discussion of dynamics.)
15. Make some sketches to show how would you set up a plain column-and-knee milling machine to make it suitable for milling the top and sides of a large block.
16. Make some sketches to show how you would set up a horizontal milling machine to cut both sides of a block of metal simultaneously.
17. Explain how controlled movements of the work in three mutually perpendicular directions are obtained in column-and-knee-type milling machines.
18. What is the basic principle of a universal dividing head?
19. What is the purpose of the hole-circle plate on a universal dividing head?

Problems

1. You have selected a feed per tooth and a cutting speed for a face milling process. Reasonable values for feed and speed are 0.010 in. per tooth and 200 sfpm. The cutter is 8 in. in diameter, as shown in Figure 24-9. Compute the input values for the machine tool.
2. How much time will be required to face mill an AISI 1020 steel surface Bhn, 150, that is 12 in. long and 5 in. wide, using a 6-in-diameter, eight-tooth tungsten carbide inserted-tooth face mill cutter? Select values of feed per tooth and cutting speed from Table 24-1.
3. If the depth of cut is 0.35 in., what is the metal removal rate in Problem 2?
4. Estimate the power required for the operation of Problem 3. Do not forget to consider Figure 24-7.
5. Examine the part shown in Figure 1-6. The slot on the left end must be produced by machining. Provide a process plan (a description [sketch] of how the part would set up in the machine for machining the slot and the details regarding cutting tools, such as material, sizes, and so on). Specify (select) the type of milling machine, the cutting parameters, and any other information needed to make this component.
6. A gray cast iron surface 6 in. wide and 18 in. long may be machined on either a vertical milling machine, using an 8-in.-diameter face mill having eight inserted HSS teeth, or on a horizontal milling machine using an HSS slab mill with eight teeth on a 4-in. diameter. Which machine has the faster cutting time?
7. An operation is to be performed to machine three grooves on a number of parts shown in Figure 24-11. Setup time is 20 minutes on a shaper (not shown) and 30 minutes on the horizontal milling machine. The direct time to machine each piece on the shaper is 14 min and on the miller is 6 min. Labor costs $10/hr. The charge for the use of the shaper is $10/hr and for the milling machine $20/hr. What is the breakeven quantity, below which the shaper is more economical than the mill.
8. In Figure 24-12, the feed is 0.006 in. per tooth. The cutter is rotating at an rpm that will produce the desired surface cutting speed of 125 sfpm. The cutter diameter is 5 in. The depth of cut is 0.5 in. The block is 2 in. wide.
   a. What is the feed, in inches per minute, of the milling machine table?
   b. What is the MRR for this situation?
   c. What is horsepower (HP) consumed by this process, assuming an 80% efficiency and a HP_s value for this material of 1.8?
9. Suppose you want to do the job described in Problem 6 by slab milling. You have selected a 6-in.-diameter cutter with eight TiN-coated carbide teeth. The cutting speed will be 500 sfpm and the feed per tooth will be 0.010 in. per tooth. Determine the input parameters for the machine (rpm of arbor and table feed), then calculate the T_m and MRR. Compare these answers with what you got for face milling the block with HSS teeth.
10. The Bridgeport vertical-spindle milling machine is perhaps the single most popular machine tool. Virtually every factory (or shop) that does machining has one or more of these type machines. Go to your nearest machine shop and find a Bridgeport, make a sketch to show how it works, and explain what makes it so popular.

www.wiley.com/college/degarmo

Chapter 24 CASE STUDY

HSS versus Tungsten Carbide Milling

The K & C Machine works, which does job shop machining, has received an order to make 40 duplicate pieces, made of AISI 4140 steel, which will require 1 hour per piece of actual cutting time if a high-speed-steel (MI) milling cutter is used. Abigail Langley, a new machinist, says the cutting time could be reduced significantly if the company would purchase a suitable tungsten carbide milling cutter. Hugh Fellows, the foreman for the milling area, says he does not believe that Abigail's estimate is realistic, and he is not going to spend $450 (the current price from the vendor) of the company's money on a carbide cutter that probably would not be used again. The machine hour rate, including labor for your shop is $40 per hour. Abigail and Hugh have come to you, the supervisor of the shop, for a decision on whether or not to buy the cutter, which is readily available from a local supplier.

What factors should you consider in this situation? How much faster could the carbide cutter cut compared to the HSS cutter? See reference table. Based on your best guess as to the savings in actual cutting time per piece, who do you think is correct, Abigail or Hugh?

Representative Cutting Data

Material						**Forces**	
Work	Tool	Back Rake (deg.)	Feed (ipt)	Width (in.)	Velocity (fpm)	Cutting (lb)	Thrust (lb)
AIS14140	HSS	0	0.0104	0.100	100	360	190
AIS14140	Carbide	0	0.011	0.15	540	540	156
AIS14145	Carbide	0	0.015	0.25	560	1190	560

CHAPTER 25

WORKHOLDING DEVICES FOR MACHINE TOOLS

25.1 INTRODUCTION

In the chapters on machining processes, the manner in which workpieces are mounted and held in the various machine tools was discussed. Workholding devices, often called jigs and fixtures, are critical components in the manufacturing of interchangeable parts. *Workholders* hold and locate the work in the machine tool with respect to the cutting tool. For example, Figure 25-1 shows an engine lathe and a CNC turning center with two spindles, each holding a chuck that holds the workpiece in the correct location with respect to the cutting tools. For many machine tools, fixtures hold the workpieces while providing location with respect to the cutting tools. With workholders, process accuracy and precision (repeatability) can be achieved that otherwise would be impossible with a given combination of cutting tools and machine tools. In this chapter, workholding devices (jigs and fixtures) will be considered as important production tools or adjuncts, with primary attention being directed toward their functional characteristics, their relationship to the machine tools, and the manufacturing processes.

In recent years, workholding devices have become more flexible; that is, (1) able to hold more than one part and (2) able to be quickly exchanged. Flexible workholders are critical elements in lean manufacturing cells, where components are made in families of parts (groups of parts of similar design). Further, being able to change from one device to another quickly to accommodate different parts means smaller lot sizes can be run, which reduces inventory levels in plants. These flexibility requirements add significantly to the complexity of conventional jig and fixture design. Let's begin with a discussion of the basics of jig and fixture design.

25.2 CONVENTIONAL FIXTURE DESIGN

In the conventional method of fixture design, tool designers rely on their experience and intuition to design simple, single-purpose fixtures for specific machining operations, often using a trial-and-error method until the workholders perform satisfactorily. Of course, these designers should calculate the clamping forces or stress distributions in the fixturing elements to make sure that the loads will not deform the fixtures or the workpieces elastically or plastically. In the design of the workholding devices, two primary functions must be considered: *locating and clamping*. *Locating* refers to orienting and positioning the part in the machine tool with respect to the cutting tools to achieve

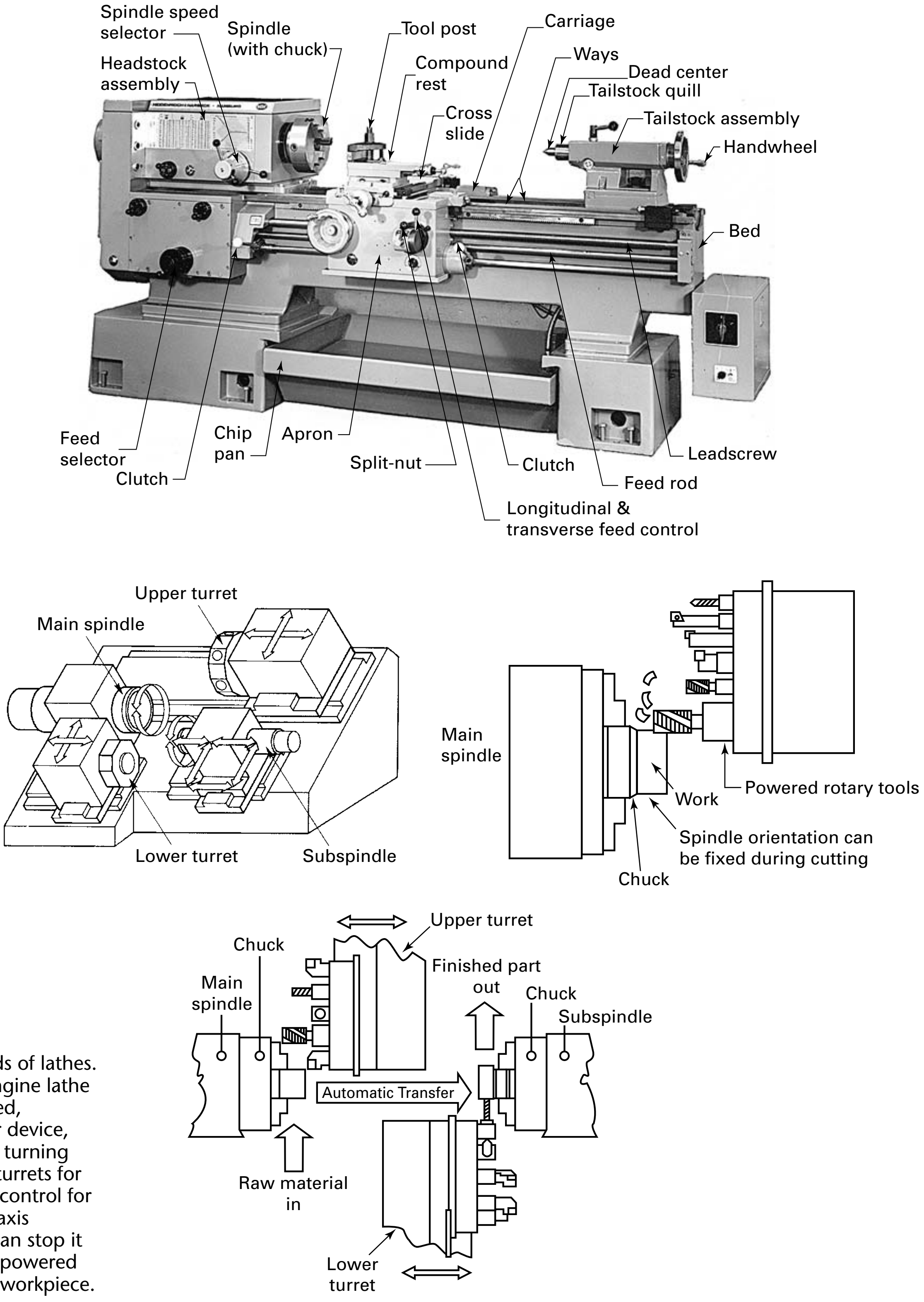

FIGURE 25-1 Two kinds of lathes. Above, a conventional engine lathe with principal parts named, including the workholder device, the chuck. Below, a CNC turning center with two chucks, turrets for cutting tools, and C-axis control for the main spindle. The C-axis control, on the spindle, can stop it in any orientation so the powered tools can operate on the workpiece.

the required specifications. *Clamping* refers to holding or maintaining the part in that location during the cutting operations (resisting the cutting forces).

Jigs and *fixtures* are specially designed and built workholding devices that hold the work during machining or assembly operations. In addition, a jig determines a location dimension that is produced by machining or fastening. For example, location dimensions determine the position of a hole on a plate (Figure 25-2). Consider the subject of dimensioning as used in drafting practice. Dimensions are of two types: *size* and

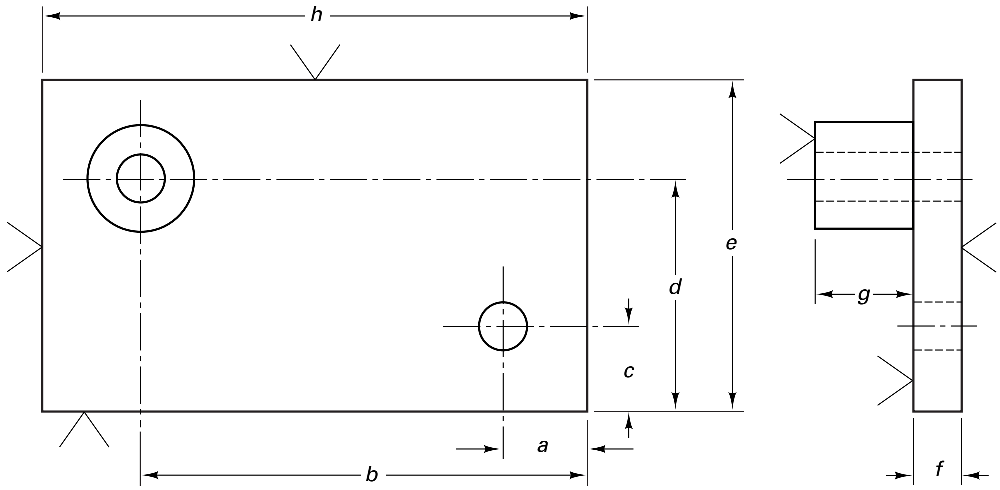

FIGURE 25-2 Drawing of a plate showing locating dimensions *(a, b, c, d)* versus sizing dimensions *(e, f, g, h)*.

location. *Size* dimensions denote the size of geometrical shapes—holes, cubes, parallelepipeds, and so on—of which objects are composed. *Location* dimensions, on the other hand, determine the position or location of these geometrical shapes *with respect to each other*. Thus *a* and *c* in Figure 25-2 are location dimensions, whereas *e* and *g* are size dimensions. With location dimensions in mind, one can precisely define a jig as follows: *A jig is a special workholding device that, through built-in features, determines location dimensions that are produced by machining or fastening operations*. The key requirement of a jig is that it determine a location dimension. Thus, jigs accomplish layout by means of their design.

In order to establish location dimensions, jigs may do a number of other things. They frequently guide tools, as in drill jigs, and thus determine the location of a component geometrical shape. However, they do not always guide tools. In the case of welding jigs, component parts are held (located) in a desired relationship with respect to each other while an unguided tool accomplishes the fastening. The guiding of a tool is not a necessary requirement of a jig.

Similarly, jigs usually hold the work that is to be machined, fastened, or assembled. However, in certain cases, the work actually supports the jig. Thus, although a jig *may* incidentally perform other functions, the basic requirement is that, through qualities that are built into it, certain critical dimensions of the workpiece are determined.

A *fixture* is *a special workholding device that holds work during machining or assembly operations and establishes size dimensions*. The key characteristic is that it is a *special* workholding device, designed and constructed for a particular part or shape. A general-purpose device, such as a chuck in a lathe or a clamp on a milling machine table, is usually not considered to be a fixture. Thus a fixture has as its specific objective the facilitating of *setup*, or making the part holding easier. Because many jigs hold the work while determining critical location dimensions, they usually meet all the requirements of a fixture. Alternatively, many fixtures are used in NC machines holding parts where holes are located and drilled according to a program. So the strict definition of jigs and fixtures has been blurred by the changes in technology.

In designing workholders, the designer must consider whether the part is a casting, forging, or bar stock. With castings and forgings, variations in shape and size must be accommodated in the design, and usually a machining operation is required to establish a reference surface (called the datum surface) to aid initial fixturing.

In parts cut from bar stock, allowances must be made for inaccuracies and irregularities produced by the cutoff operations. Table 25-1 provides a summary of design criteria for workholders for you to review. Obviously, it is impossible to meet all these design criteria for workholders. Compromise is inevitable. Still, it is useful to know the optimal design objectives to illustrate the positioning, holding, and supporting functions that fixtures must fulfill.

TABLE 25-1 Design Criteria for Workholders

Positive location	A fixture must, above all else, hold the workpiece precisely in space to prevent each of 12 kinds of degrees of freedom—linear movement in either direction along the X-, Y-, and Z-axes and rotational movement in either direction about each axis.
Repeatability	Identical workpieces should be located by the workholder in precisely the same space on repeated loading and unloading cycles. It should be impossible to load the workpiece incorrectly. This is called "foolproofing" the jig or fixture.
Adequate clamping forces	The workholder must hold the workpiece immobile against the forces of gravity, centrifugal forces, inertial forces, and cutting forces but not distort the part. Milling and broaching operations, in particular, tend to pull the workpiece out of the fixture, and the designer must calculate these machining forces against the fixture's holding capacity. The device must be rigid.
Reliability	The clamping forces must be maintained during machine operation every time the device is used. The mechanism must be easy to maintain and lubricate.
Ruggedness	Workholders usually receive more punishment during the loading and unloading cycle than during the machining operation. The device must endure impact and abrasion for at least the life of the job. Elements of a device that are subject to damage and wear should be easily replaceable.
Design and construction ease	Workholders should use standard elements as much as possible to allow the engineer to concentrate on function rather than on construction details. Modular fixtures epitomize this design rule as the entire workholder is made from standard elements, permitting a bolt-together approach for substantial time and cost savings over custom workholders.
Low profile	Workholder elements must be clear of the cutting-tool path. Designing lugs on the part for clamping can simplify the fixture and allow proper tool clearance.
Workpiece accommodation	Surface contours of castings or forgings vary from one part to the next. The device should tolerate these variations without sacrificing positive location or other design objectives.
Ergonomics and safety	Clamps should be selected and positioned to eliminate pinch points and facilitate ease of operation. The workholder elements should not obstruct the loading or unloading of workpieces. In manual operations, the operator should not have to reach past the tool to load or unload parts. A rule sometimes used is that the operator can repeatedly exert a force of 30 to 40 lb to open or close a clamp but greater forces than this can cause ergonomic problems.
Freedom from part distortion	Parts being machined can be distorted by gravity, the machining forces, or the clamping forces. Once clamped into the device, the part must be unstressed or, at least, undistorted. Otherwise, the newly machined surfaces take on any distortions caused by the clamping forces.
Flexibility	The workholding device can locate and restrain more than one type (design) of part. Many different schemes are being proposed to provide workholder flexibility. Modular vise fixturing, programmable clamps using air-activated plungers, part encapsulation with a low-melting-point alloy, and NC-controlled clamping machines are some of the more recently developed systems. Despite their flexibilities, these clamping systems have some significant drawbacks. They are expensive, and the individual systems may not integrate well into individual machine tools. (See the discussions of intermediate jig concept and group jigs for additional thoughts on flexibility.)

25.3 DESIGN STEPS

The classical design of a workholder (e.g., a drill jig) involves the following steps:

1. Analyze the drawing of the workpiece and determine (visualize) the machining operations required to machine it. Note the critical (size and location) dimensions and tolerances.
2. Determine the orientations of the workpiece in relation to the cutting tools and the movements of the tools and tables.
3. Perform an analysis to estimate the magnitude and direction of the cutting forces (see Chapter 21).
4. Study the standard devices available for workholders and for the clamping functions. Can an off-the-shelf device be modified? What standard elements can be used?
5. Form a mental picture of the workpiece in position in the workholder in the machine tool with the cutting tools performing the required operation(s). See the figures in chapters on machining for examples.
6. Make a three-dimensional sketch of the workpiece in the workholder in its required position to determine the location of all the elements: clamps, locator buttons, bushings, and so on.
7. Make a sketch of the workholder and workpiece in the machine tool to show the orientation of these elements with respect to the cutting tool in the machine tool.

3-2-1 LOCATION PRINCIPLE

After determining the orientation of the workpiece in the workholder, the next step is to locate it in that position. This location is also used for all similar workpieces. The designer must select or design locating devices (supports) *that ensure that every workpiece placed*

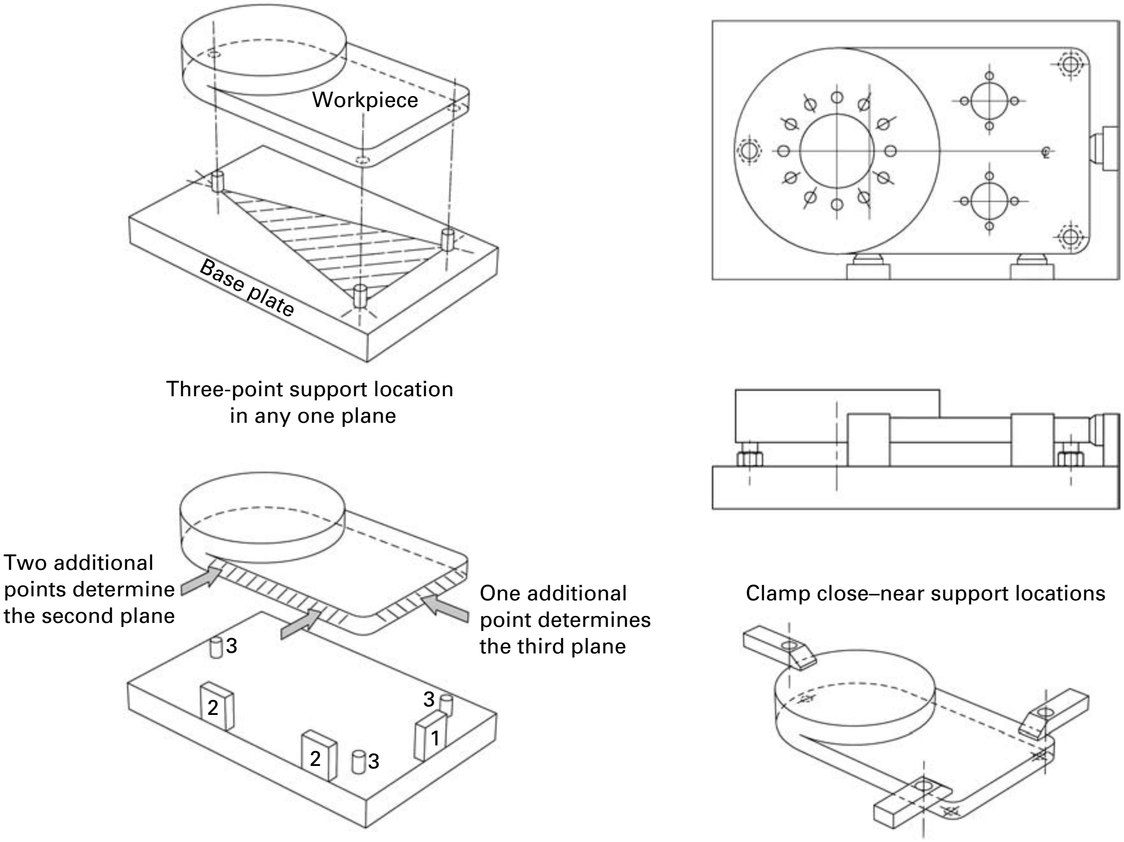

FIGURE 25-3 Workpiece location is based on the 3-2-1 principle. Three points will define a base surface, two points in a vertical plane will establish an end reference, and one point in a third plane will positively locate most parts.

in the device occupies the same position with respect to the cutting tools. Thus, when the machining operation is performed, the workpieces are processed identically. This is, of course, the key to making interchangeable parts. In locating the workpiece, the basic *3-2-1 principle* of location is used (Figure 25-3). For positive location, the fixture must position the workpiece in each of three perpendicular planes. Positioning processes can vary greatly, but workholder design always begins by defining the first plane of reference with three points. Once the object is defined in a single plane, supported at three points (like a three-legged stool on a floor), a second plane can be assigned that is perpendicular to the first. To do this, the object is brought up against any two points in the second plane. To continue the example, the stool is slid along the floor until two legs touch a wall.

A third plane, perpendicular to each of the other two, is then defined by designating one point on it. As long as an object is in contact with three points on the first plane, two points on the second, and a single point on the third, it is positively located in space. The location points within each plane should be selected as far apart as possible for maximum stability.

In practice, it is often necessary to support a workpiece on more points than this 3-2-1 formula dictates. The machining of a large rectangular plate, for example, typically requires support at four or more points. However, any extra points must be established carefully to support the workpiece in a plane defined by three—and only three—points.

Appropriate clamping devices are selected so that the clamping forces hold the workpiece in the proper location and resist the effects of the cutting forces, centrifugal forces, and vibrations. If possible, the machining forces should act into the location points, not into the clamps, so that smaller clamps can be used. In reality, the worker often determines clamping force when loading the part into the workholder. Fixtures are usually fastened to the table of the machine tool. Although used primarily on milling and

TABLE 25-2 Twenty Principles for Workholder Design

1. Determine the critical surfaces or points for the part.
2. Decide on locating points and clamping arrangements.
3. For mating parts, use corresponding locating points or surfaces to ensure proper alignment when assembled.
4. Try to use 3-2-1 location, with 3 assigned to largest surface. Additional points should be adjustable.
5. Locating points should be visible so that the operator can see if they are clean. Can they be replaced if worn?
6. Provide clamps that are as quick acting and easy to use as is economically justifiable for rapid loading and unloading.
7. Clamps should not require undue effort by the operator to close or to open, nor should they harm hands and fingers during use.
8. Clamps should be integral parts of device. Avoid loose parts that can get lost.
9. Avoid complicated clamping arrangements or combinations that can wear out or malfunction. Keep it simple.
10. Locate clamps opposite locaters (if possible) to avoid deflection/distortion during machining and spring-back afterward.
11. Take the thrust of the cutting forces on the locaters (if possible), not on the clamps.
12. Arrange the workholder so that the workpiece can easily be loaded and unloaded from the device and so that it can be loaded only in the correct manner (mistake-proof) and in such a way that the location can be found quickly (visually).
13. Consistent with strength and rigidity, make the workholder as light as possible.
14. Provide ample room for chip clearance and removal.
15. Provide accessibility for cleaning.
16. Provide for entrance and exit of cutting fluid (which may carry off chips) if one is to be used.
17. Provide four feet on all movable workholders.
18. Provide hold-down lugs on all fixed workholders.
19. Provide keys to align fixtures on machine tables so fixtures can be replaced in exactly the same position.
20. Do not sacrifice safety for production.

broaching machines, fixtures are also designed and used to hold workpieces for various operations on most of the standard machine tools and machining centers. Some additional design rules for fixture design are given in Table 25-2.

25.4 CLAMPING CONSIDERATIONS

Clamping of the work is closely related to support of the work. Any clamping, of course, induces some stresses into the part that can cause some distortion of the workpiece, usually elastic. If this distortion is measurable, it will cause some inaccuracy in final dimensions, as illustrated in an exaggerated manner in Figure 25-4. The obvious solution is to spread the clamping forces over a sufficient area to reduce the stresses to a level that will not produce appreciable distortion. The clamping forces should direct the work against the points of location and work support. Clamped surfaces often have some irregularities that may produce force components in an undesired direction. Consequently, clamping forces should be applied in directions that will assure that the work will remain in the desired position.

Whenever possible, jigs and fixtures should be designed so that the forces induced by the cutting process act to hold the workpiece in position against the supports. These

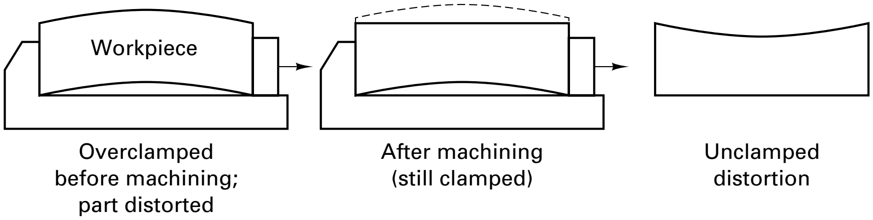

FIGURE 25-4 Exaggerated illustration of the manner in which excessive clamping forces can affect the final dimensions of a workpiece.

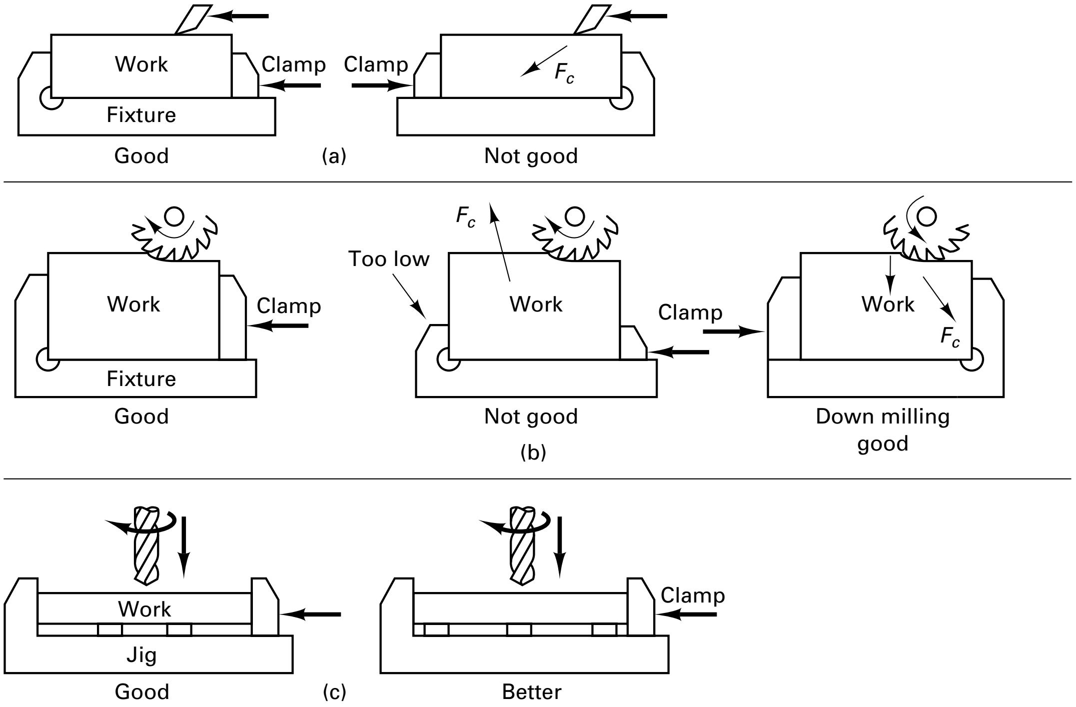

FIGURE 25-5 In (a) and (b), proper work support to resist the forces imposed by cutting tools is demonstrated. In (c), three buttons form a triangle for the work to rest on.

forces are predictable, and proper utilization of them can materially aid in reducing the magnitude of the clamping stresses required. In addition to locating the work properly, the stops or work-supporting areas must be arranged so as to provide adequate support against the cutting forces. As shown in Figure 25-5a, having the cutting force act against a fixed portion of the jig or fixture and not against a movable section permits lower clamping forces to be used. Figure 25-5b illustrates the principle of keeping the points of clamping as nearly as possible in line with the action forces of the cutting tool so as to reduce their tendency to pull the work from the clamping jaws. Compliance with this principle results both in lower clamping stresses and less massive clamping devices. Don't forget that down milling produces different forces than up milling. The location points should be as far apart as possible but positioned so as not to allow the cutting force to distort the work, as shown in Figure 25-5c. The cutting forces may distort the work, with resulting inaccuracy or broken tools. These design suggestions materially reduce vibration and chatter during the cutting process.

As many operations as are possible and practical should be performed with each clamping of the workpiece. This principle has both physical and economic aspects. Because some stresses result from each clamping, with the possibility of accompanying distortion, greater accuracy is achieved if multiple operations are performed with each clamping. From the economic viewpoint, if the number of jigs or fixtures is reduced, less capital will be required and less time will be spent handling the workpiece loading and unloading.

■ 25.5 CHIP DISPOSAL

When jigs or fixtures are used in connection with chip-making operations, adequate provision must be made for the easy removal of the chips. This is essential for several reasons. First, if chips become packed around the tool, heat will not be carried away and tool life can be decreased. Figure 25-6 illustrates how insufficient clearance between the end of a drill bushing and the workpiece can prevent the chips from escaping, whereas too much clearance may not provide accurate drill guidance and can result in broken drills.

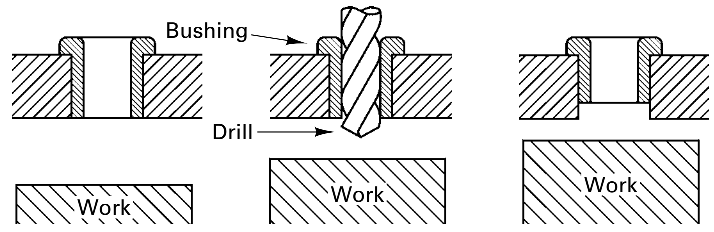

FIGURE 25-6 Proper clearance between drill bushing and tool of workpiece is important.

Too much clearance permits tool drift

Correct

Drill fills with chips; too little clearance

A second reason chips must be removed is so that they do not interfere with the proper seating of the work in the jig or fixture (Figure 25-7). Even though chips and dirt always have to be cleaned from the locating and supporting surfaces by a worker or by automatic means, such as an air blast, the design details should be such that chips and other debris will not readily adhere to, or be caught in or on, the locating surfaces, corners, or overhanging elements and thereby prevent the work from seating properly. Such a condition results in distortion, high clamping stresses, and incorrect workpiece dimensions.

25.6 UNLOADING AND LOADING TIME

The cost of the workholders must be justified by the quantities of production involved, and their primary purpose is to increase productivity and quality. While work is being put into or being taken out of jigs and fixtures, the machines with which they are used are not making chips. The loading and unloading time plus the machining time (also called the run time) plus any delay times equals the cycle time for a part. The loading and unloading time is greatly influenced by the choice of clamps.

There are many ways in which jigs and fixtures can be made easier to load and unload. Some clamping methods can be operated more readily than others. For example, in the drill jig shown in Figure 25-8, a *knurled clamping screw* is used to hold the block against the buttons at the end of the jig. To clamp or unclamp the block in this direction requires several motions. On the other hand, a *cam latch* is used to close the jig and hold the workpiece against the rear locating buttons. This type of latch can be operated with a single motion.

Certainly, the device should be designed so that the part cannot be loaded incorrectly. Defect prevention is often accomplished by the clamping device so that a part loaded improperly cannot be clamped. Ease of operation of workholders not only directly increases the productivity of such equipment but also results indirectly in better quality and fewer lost-time accidents.

The workholder is as critical as the machine tool and the cutting tool to the final quality of the part. The use of the workholder eliminates manual layout of the desired features of the part on the raw material. Manual layout requires a highly skilled worker and is very time consuming. The workholder permits a less skilled person to achieve quality and repeatable production with far greater efficiency.

25.7 EXAMPLE OF JIG DESIGN

Several principles of work location and tool guidance are illustrated in Figure 25-8. The two mounting holes in the base of the bearing block are to be located and drilled. The dimensions A, B, and C are determined by the jig. While it is not specified on the drawing,

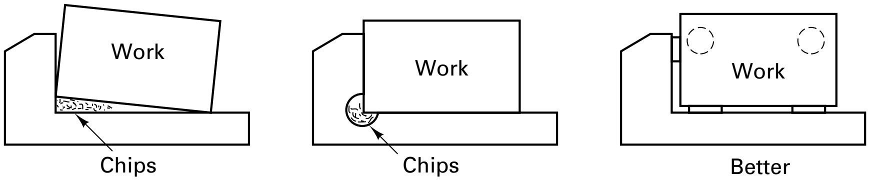

FIGURE 25-7 Methods of providing chip clearance to ensure proper seating of the work.

Not good

Good

Better

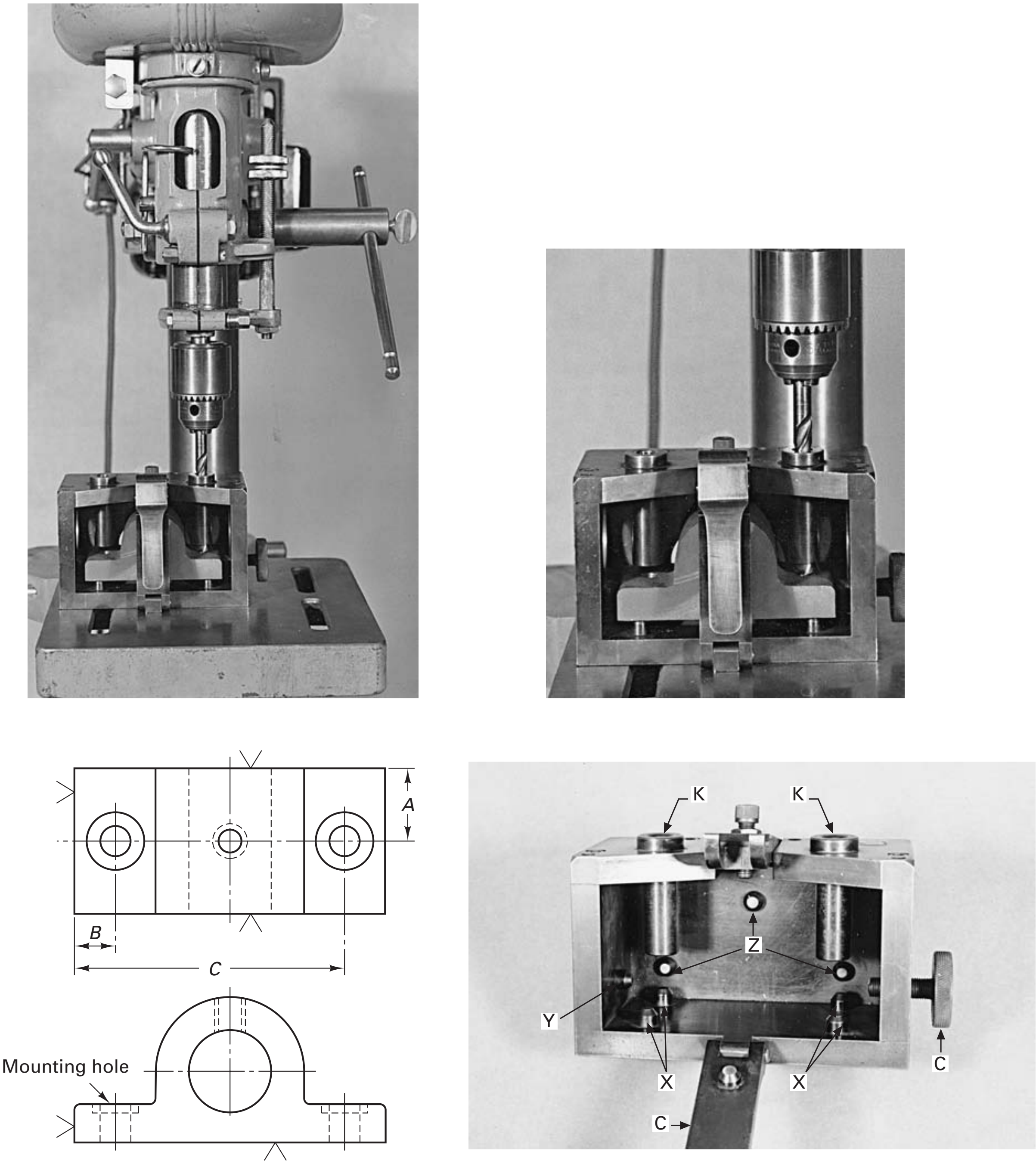

FIGURE 25-8 (Lower left) Part to be drilled; (lower right) box drill jig for drilling two holes; (upper left) jig in drill press; (upper right) drill being guided by drill bushing.

there is one other location dimension that must be controlled. The axes of the mounting holes must be at right angles to the bottom surface of the block, so the bottom must be machined (milled) prior to this drilling step.

The way in which the part dimensions are obtained in the finished workpiece is as follows. The surfaces marked with a large carats ∨ are reference (or location) surfaces and are finished (machined) prior to insertion of the part into the drill jig. The part rests in the jig on four buttons marked X in Figure 25-8. These buttons, made of hardened steel, are set into the bottom plate of the jig and are accurately ground so that their surfaces are in a single plane. The left-hand end of the part is held against another button Y. This locating button is built into the jig so that its surface is at right angles to the plane of the

X buttons. When the block is placed in the jig, its rear surface rests against three more buttons marked Z. These buttons are located and ground so that their surfaces lie in a plane that is at right angles to the planes of both the X and Y buttons. The part is held in its located position by the two clamps marked C.

The use of four buttons on the bottom of this jig (X buttons) appears not to adhere to the 3-2-1 principle stated previously. However, although only two X buttons would have been required for complete location, the use of only two buttons would not have provided adequate support during drilling. The thrust from the drills would have dislodged the part from the locators. Thus the 3-2-1 principle is a *minimum* concept and often must be exceeded.

To ensure that the mounting holes are drilled in their proper locations, the drill must be located and then guided during the drilling process. This is accomplished by the two drill bushings marked K. Such drill bushings are accurately made of hardened steel, with their inner and outer cylindrical surfaces concentric. The inner diameter is made slightly larger than the drill—usually 0.0005 to 0.002 in.—so that the drill can turn freely but not shift appreciably. The bushings are accurately mounted in the upper plate of the jig and positioned so that their axes are exactly perpendicular to the plane of the X buttons, at a distance A from the Z buttons and at distances B and C, respectively, from the plane of the Y button. Note that the bushings are sufficiently long that the drill is guided close to the surface where it will start drilling. Consequently, when the workpiece is properly placed and clamped in the jig, the drill will be located and guided by the bushings so that the critical dimensions on the workpiece will be correct. The right hole will be drilled in a vertical-spindle drill press (not running), and then the jig will be shifted (manually by the operator) to the right, and the left hole will be drilled. The box construction is rigid but open for chip removal.

25.8 TYPES OF JIGS

Jigs are made in several basic forms and carry names that are descriptive of their general configurations or predominant features. Several of these are illustrated in Figure 25-9.

A *plate jig* is one of the simplest types, consisting only of a plate that contains the drill bushings and a simple means of clamping the work in the jig or the jig to the work. In the latter case, wherein the jig is clamped to the work, the device is sometimes called a *clamp-on jig*. Such jigs are frequently used on large parts, where it is necessary to drill one or more holes that must be spaced accurately with respect to each other, or to a corner of the part, but that need not have an exact relationship with other portions of the work.

Channel jigs also are simple and derive their name from the cross-sectional shape of the main member. They can be used only with parts having fairly simple shapes.

Ring jigs are used only for drilling round parts, such as pipe flanges. The clamping force must be sufficient to prevent the part from rotating in the jig. *Diameter jigs* provide a means of locating a drilled hole exactly on a diameter of a cylindrical or spherical piece.

Leaf jigs derive their name from the hinged leaf or cover that can be swung open to permit the workpiece to be inserted and then closed to clamp the work in position. Drill bushings may be located in the leaf as well as in the body of the jig to permit locating and drilling holes on more than one side of the workpiece. Such jigs are called *rollover jigs* or *tumble jigs* when they require turning to permit drilling from more than one side.

Box jigs are very common, deriving their name from their boxlike construction. They have five fixed sides and a hinged cover or leaf, which opens to permit loading the workpiece, and a cam that locks the workpiece in place. Usually, the drill bushings are located in the fixed sides to ensure retention of their accuracy. The fixed sides of the box are usually fastened by means of dowel pins and screws so that they can be taken apart and reassembled without loss of accuracy. Because of their more complex construction, box jigs are costly, but their inherent accuracy and strength can be justified when there is sufficient volume of production. They have two obvious disadvantages: (1) it is usually more difficult to put work into them than into simpler types, and (2) there is a greater tendency for chips to accumulate within them. Figure 25-8 shows a box-type jig.

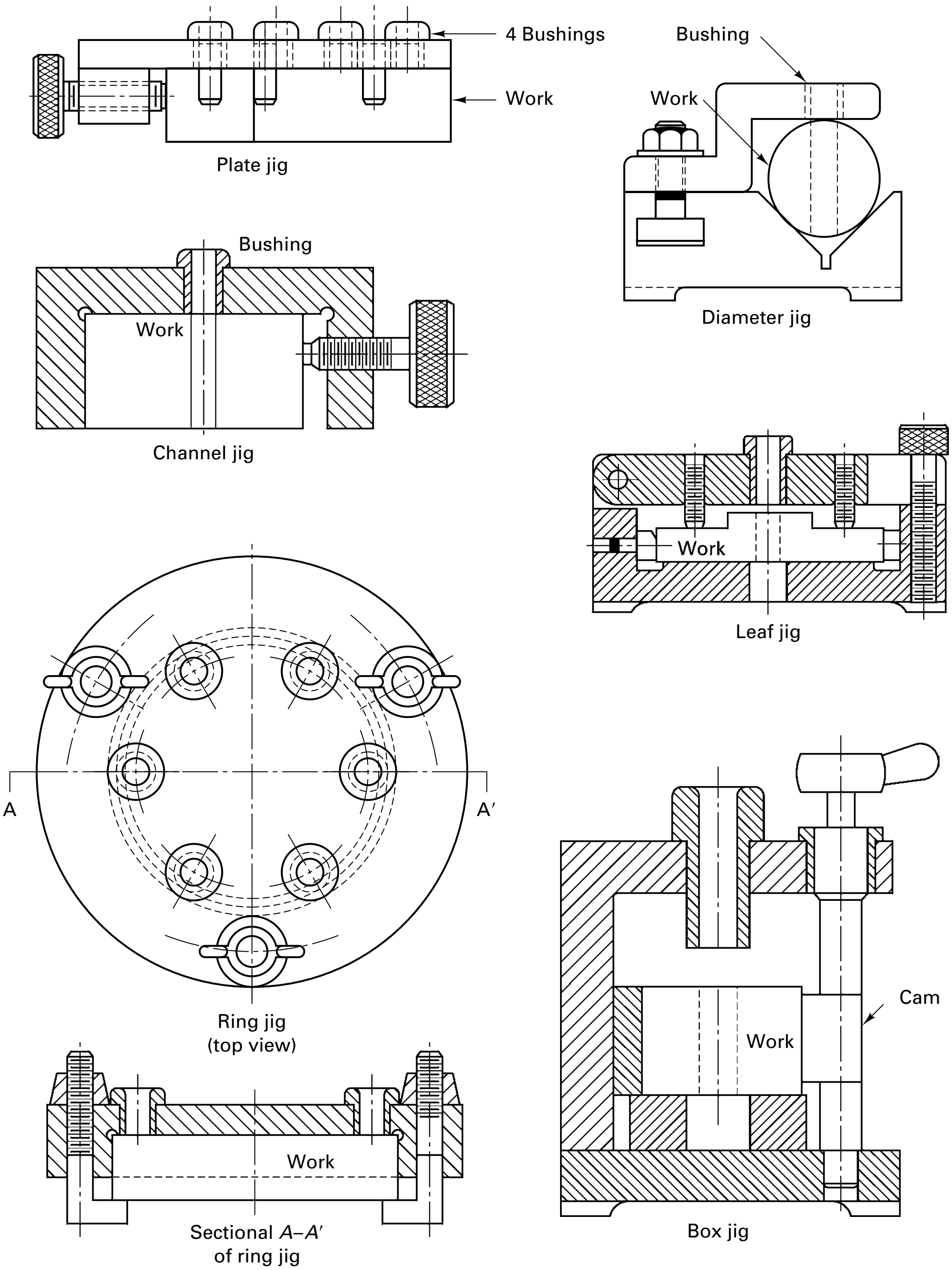

FIGURE 25-9 Examples of some common types of workholders—jigs.

Because jigs must be constructed very accurately and be made sufficiently rugged so as to maintain their accuracy despite the use (and abuse) to which they inevitably are subjected, they are expensive. Consequently, several methods have been devised to aid in lowering the cost of manufacturing jigs. One way to reduce this cost is to use simple, standardized plate and clamping mechanisms called *universal jigs* (Figure 25-10).

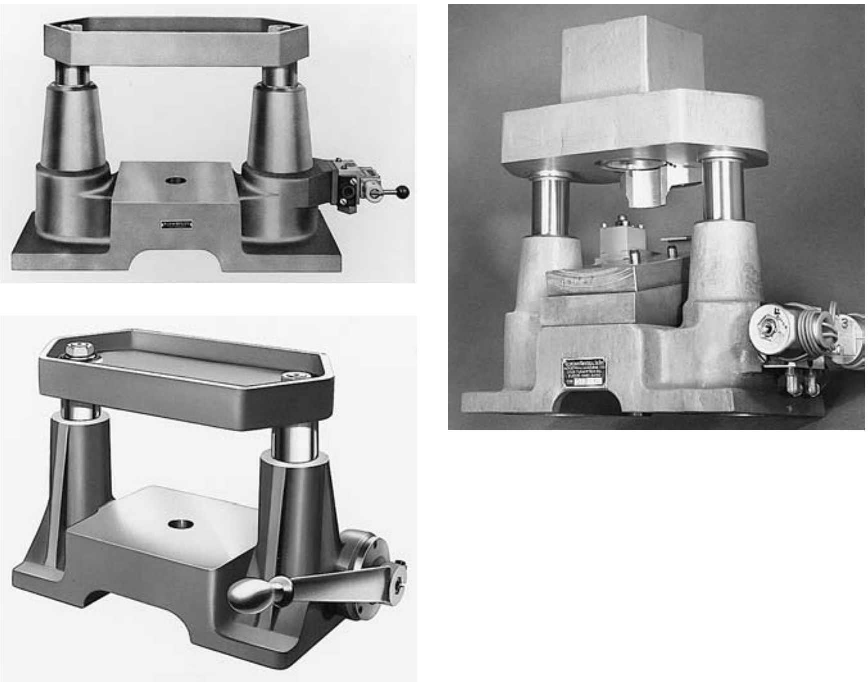

FIGURE 25-10 Two types of universal jigs are manual (bottom) and power-actuated (center). A completed jig (on the top) made from unit right below. *(Courtesy of Cleveland Universal Jig Division, The Industrial Machine Company.)*

These can easily be equipped with suitable locating buttons and drill bushings to construct a jig for a particular job. Such universal jigs are available in a variety of configurations and sizes, and because they can be produced in quantities, their cost is relatively low. However, the variety of work that can be accommodated by such jigs obviously is limited. While the drill bushing should be spaced far enough from the work to allow chips to escape without entering the bushing, when drilling into an angled surface, the bushing should be very close. Once the drill has penetrated to at least one-half of the drill diameter, the bushing should be retracted to provide chip clearance. Design of the drill jig must not obstruct coolant flow to where it is needed. Bushing length should be 1.75 to 2.5 times the drill diameter.

■ 25.9 CONVENTIONAL FIXTURES

Many examples of conventional fixtures have appeared in the text. Production milling, broaching, and boring processes as performed on NC machines, conventional equipment, or machining centers routinely use fixtures to locate and hold the part properly with respect to the cutting tools on the machine tool. Like cutting tools, tooling for workholding is sold separately and is not usually supplied by the machine tool builder. Traditionally, beginning with Eli Whitney, manufacturers have designed and built custom-made, dedicated fixtures. Because of the pressure of shorter production runs and smaller lot sizes, many companies are turning to modified fixturing approaches. The greatest advantage of these systems is that the fixture can be constructed quickly.

Perhaps the most common fixture uses the *vise* as its base element. Figure 25-11 shows a schematic and photo of a typical commercially available vise that can be adapted for use as a fixture. As shown, the vise jaws are readily modified to conform to the 3-2-1 location principle and provide adequate clamping forces for almost every machining operation. Four vises (also shown in Figure 25-11) can be mounted on a subplate for rapid insertion and location in the machine, or four vices can be mounted on a tombstone for milling parts in a CNC machine.

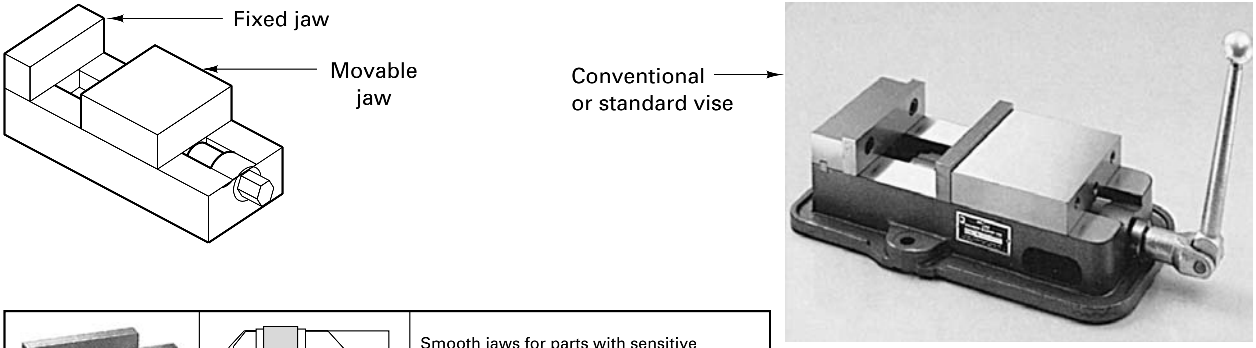

	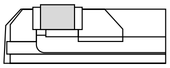	Smooth jaws for parts with sensitive clamping surfaces.
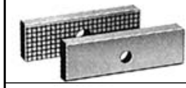	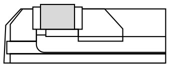	Grooved jaws (standard jaws) with smaller surface for increasing the specific surface pressure.
	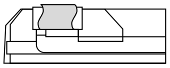	Soft basic jaws for manufacturing your own special jaws. Mat: 21 Mn Cr 5 G.
	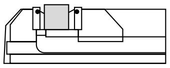	Spring leaf pull-down jaws for parts with rough clamping surfaces. Spring leaves press the workpiece against the supporting surfaces.
	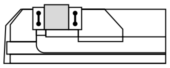	Roller pull-down jaws for parts with sensitive clamping surfaces. Jaw components adjacent to the workpiece "put" the workpiece to the supporting surface.
	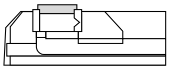	Prismatic jaws for the horizontal and vertical clamping of round and flat workpieces.
	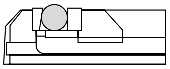	Hold-down jaws for horizontal clamping of round workpieces.
	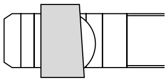	Swivel jaws for nonparallel clamping surface, compensation of conicity up to approx. 7.5 in.
	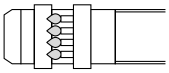	Compensation jaws I for multiple clamping of workpieces. Compensates differences in dimensions up to +3 mm.
	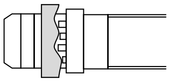	Compensation jaws II for workpieces with greatly varying surfaces. Compensated differences in dimensions up to +3 mm.
	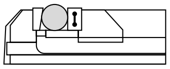	Pull-down jaws for horizontal clamping of round workpieces. Roller jaw "pulls" workpiece to the supporting surface.

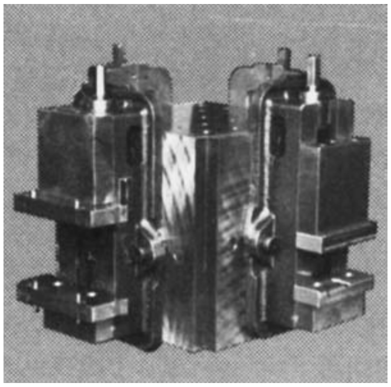

FIGURE 25-11 The conventional or standard vise (top left and right) can be modified with removable jaw plates to adapt to different part geometries. These vices can be integrated into milling fixtures (right middle and bottom).

The chucks used in lathes are really general-purpose fixtures for rotational parts. Newer chuck designs have greatly improved their flexibility (the range of diameters the chuck can accommodate in a given setup and speed of setup). Figure 25-12 shows a complete change of top jaws for a three-jaw chuck being done in less than 5 minutes. The normal time for this part of the setup might exceed 15 minutes. New quick-change insert top jaws may even snap in by hand with no jaw nuts, keys, screws, or tools. Jaws that can be exchanged by robots can also be designed.

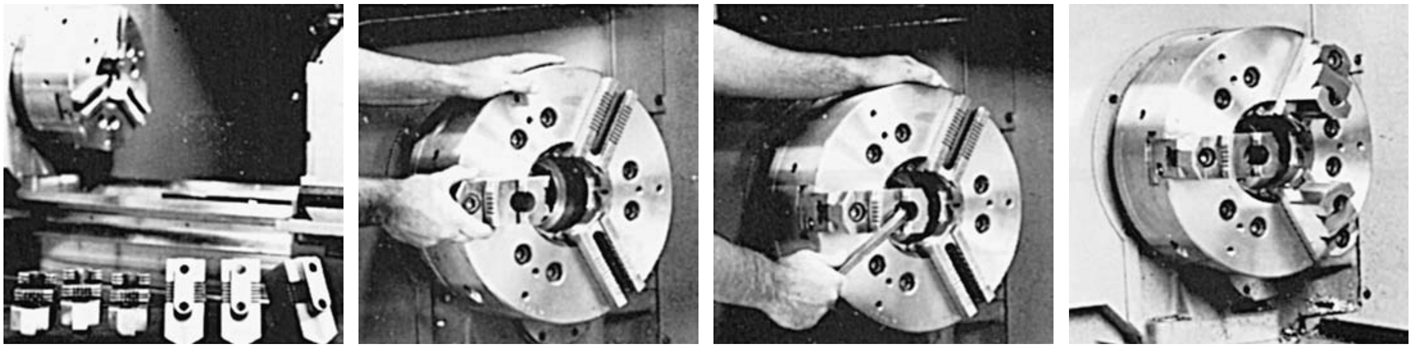

1. Pre-assembled Mini-System and top jaws.
2. Assembly being inserted into the Master Jaw.
3. Quickly retighten cap screw.
4. All 3 jaws changed in 5 minutes or less.

FIGURE 25-12 Quick-changing of the top jaws on a three-jaw chuck. *(Courtesy of Huron Machine Products.)*

Most producers of chucks use some variation of equation 25-1 to compute the maximum rpm rate at which the chuck can run:

$$S_m^2 = \frac{F_m}{3 \times (2.84 \times 10^{-5}) \times W \times D} \tag{25-1}$$

where

S_m = maximum rpm value at which gripping force equals $^1/_3\, F_m$

F_m = maximum rate gripping force, at rest (lb)

W = combined weight of jaws (lb)

D = distance from spindle centerline to center of jaw mass (in.)

Thus, with this equation, a 10-in. power chuck with a published rating F_m of 13,200 lb would retain one-third of its initial gripping force at 2507 rpm. (Check this calculation using $W = 8$ lb, $D = 3.1$ in.) The higher the rpm value, the greater the centrifugal force factor. This is an important factor in high-speed machining operations in which the part is rotating.

■ 25.10 MODULAR FIXTURING

Modular fixtures have all the same design criteria as those of conventional fixtures, plus one more—*versatility*. Modular fixture elements must be useful for a variety of machining applications and easily adaptable to different workpiece geometries. Individual fixture designs can be photographed or entered into a computer-aided design (CAD) library for future reference. After the job is done, the fixture itself can be dismantled and the elements returned to the toolroom. The erector-set approach uses either T-slot or dowel-pin designs. Figures 25-13 and 25-14 show two examples of modular fixturing. The designs begin with base plates. Elements for locating and clamping are added to the subplate. Rectangular, square, and round are the typical patterns for the subplates. Also shown are the typical components for modular fixturing systems used for mounting points, locators, attachments, and so on. The standard elements needed to construct the fixture include riser blocks, vee blocks, angle plates, cubes, box parallels, and the like. Smaller elements such as locator pins, supports, pads, and clamps are added to the subplate on the larger structural elements. Mechanical clamping devices are shown, but power-assisted clamps are available. The base and fixturing elements are made to tolerances of ±0.0002 to 0.0004 in. in flatness, parallelism, and size. Figure 25-14 shows a part in a dedicated fixture compared to a modular fixture. The dedicated fixture represents a capital investment that must be absorbed by the job and must be maintained after the job is complete. The modular fixture is disassembled and the elements reused later in fixtures for other parts. Modular fixtures are commonly used for prototype tooling and small-batch production runs. They are being incorporated more frequently into regular production as users gain confidence in this approach.

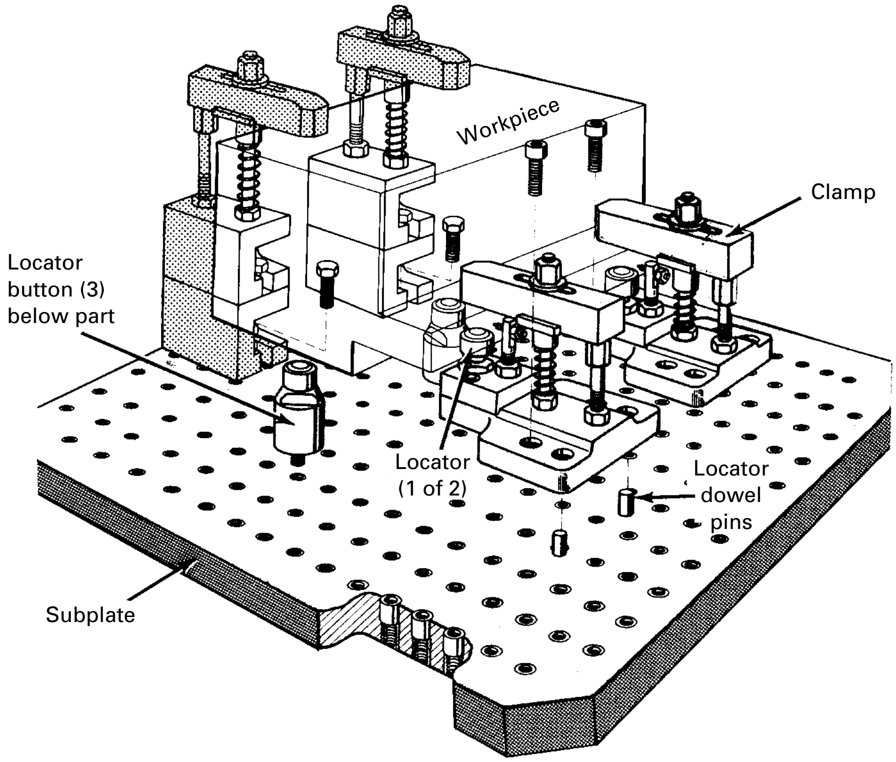

FIGURE 25-13 Modular fixturing begins with a subplate (grid base) and adds locators and clamps.

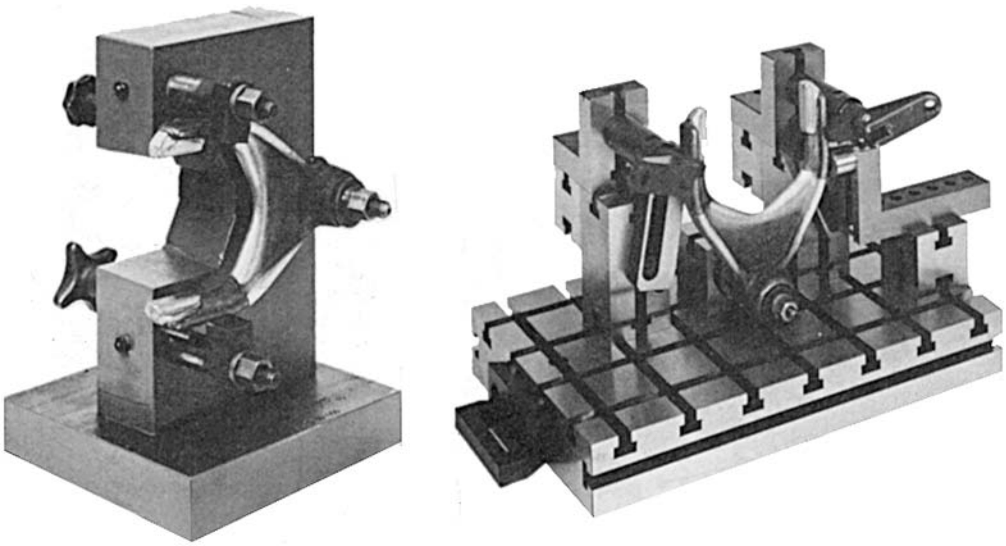

FIGURE 25-14 Dedicated fixture on the left versus modular fixture on the right. *(From* Manufacturing Engineering, *January, 1984.)*

■ 25.11 SETUP AND CHANGEOVER

Every part coming out of the workholder should be the same, resulting in interchangeable parts. But what about the first part? Does it meet specifications? What about the initial setup of the workholder into the machine tool? In many cases, the setup operation takes hours and the machine is not producing anything during this time. Rapid exchanges of workholding devices is a key technique in modern manufacturing systems. (See Shingo, 1985 for more discussion of the elimination of setup and SMED.) Reducing setup times permits shorter production runs (smaller lot sizes). Do not confuse initial setup (of workholders) with part loading and unloading or tool changing. The trick with initial setup is to do it quickly and to get the first part out of the process as a good part, with no adjustment of the machine, the tooling, or the workholder. Quick tool and die exchange is a critical component in the strategy for the factory with a future.

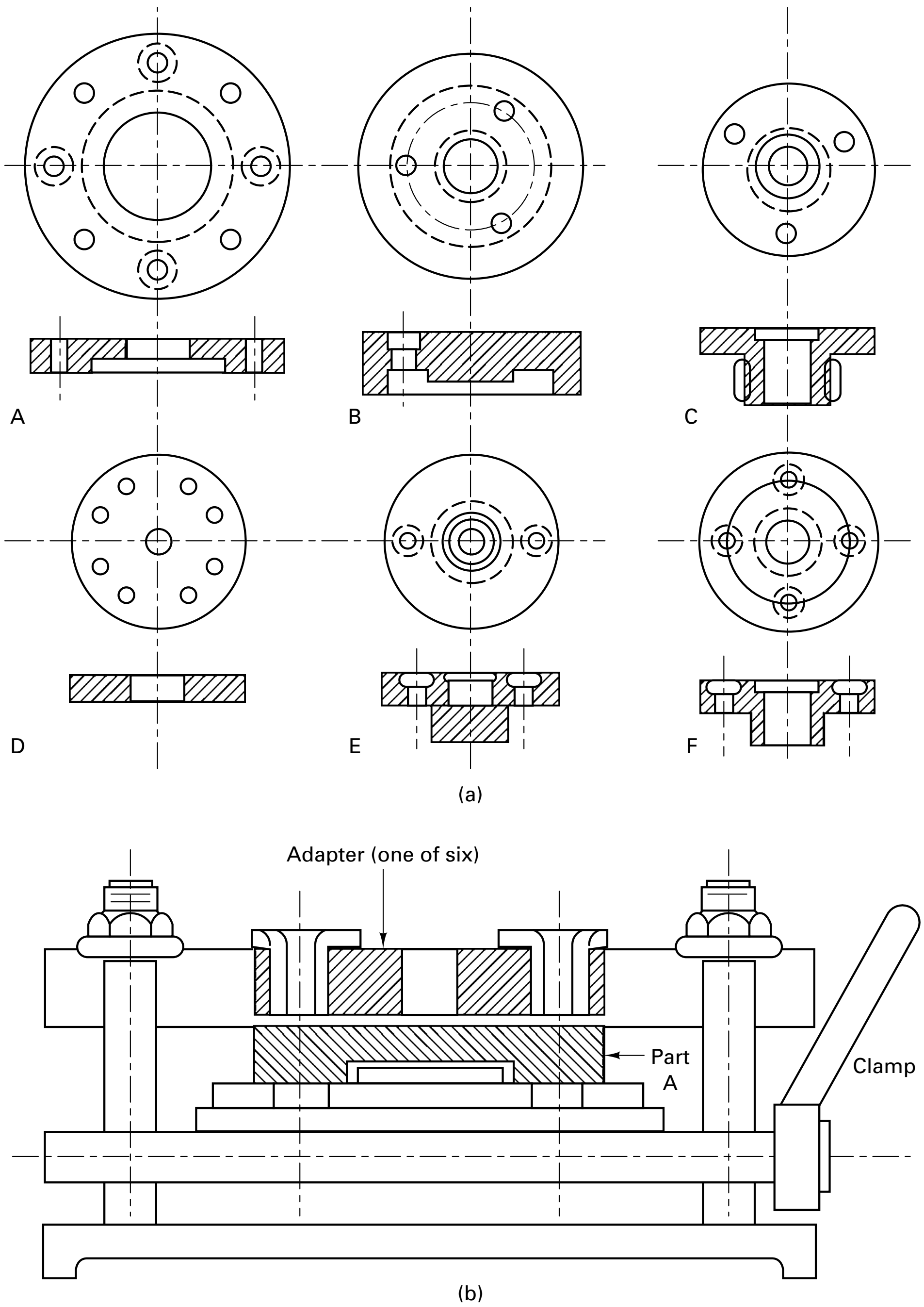

FIGURE 25-15 Master jig designed for a family of similar components. (a) Part family of rounds plates (six parts, A–F); (b) group jig for drilling, showing adapter and part A.

Another approach to rapid setup is shown in Figure 25-15, where instead of six different jigs, a master jig is made (also called a group jig) for a family of similar components and then a set of adapters is made that customizes the jig for each part in the part family. This concept of group jigs and fixtures originated from the group technology (GT) concept for master jigs as a method to form cellular manufacturing systems by determining a family of parts where an imaginary part, called the composite part, is designed that has all the key features of all the parts in the family. In other words, the composite part is an envelope, the shape of which encompasses the shapes of all the parts in the family. The theory is that if the tooling is designed for the composite part, any part that fits within the envelope could be machined without any tooling changes. This part is used for designing the workholder. The workholding devices should be able to accommodate all the parts within the parts family. For manufacturing cells, the workholders will also have to compensate for variation in cutting forces, centrifugal forces, and so on. Group workholders are designed to accept every part-family member, with or without adapters, that accommodate minor part variations.

INTERMEDIATE JIG CONCEPT

One way to achieve rapid fixture exchange is to employ the intermediate jig concept. This means that the workholding devices are designed so that they all appear the same to the machine tool but different to the parts. This usually requires one to construct intermediate jig or fixture plates to which the jig or fixture is attached. The jigs or fixtures are all different, but the plates are all identical.

The cassette tape for your VCR is an example of an intermediate workholder. To the VCR, every cassette appears to be the same and can be quickly loaded and unloaded with one handling—that is, one touch. From the outside, every tape appears to be the same, but on the inside, every tape is different. If you think about the workholding devices in terms of the intermediate jig concept, you can quickly achieve one-touch setups.

Figure 25-16 shows an example of the *intermediate jig concept*, applied to lathes and chucks. An adapter or intermediate fixture is bolted to the lathe's spindle and is a permanent part of the machine tool. The intermediate fixture will accept mating chucks that have been preset for the workpiece prior to insertion. Different chuck designs mount interchangeably on the common actuator. This method greatly reduces setup time and permits the operator to perform chuck maintenance and retooling (setup) while the machine is running. The chucks can be exchanged automatically.

Quick-change fixtures for CNC milling machines and machining centers (using the intermediate jig concept) are now available commercially.

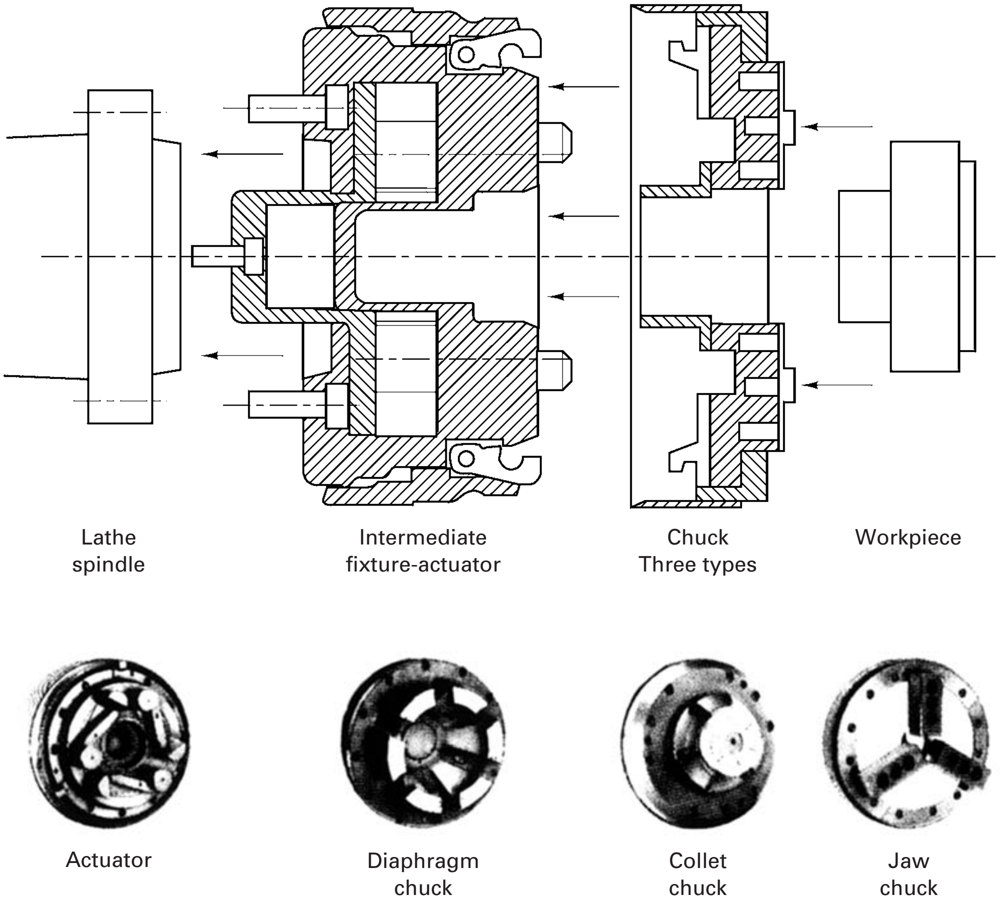

FIGURE 25-16 Example of the intermediate jig concept applied to lathe chucks. The actuator is mounted on the lathe and can quickly adapt to three different chuck types. *(Courtesy of Sheffer Collet Company.)*

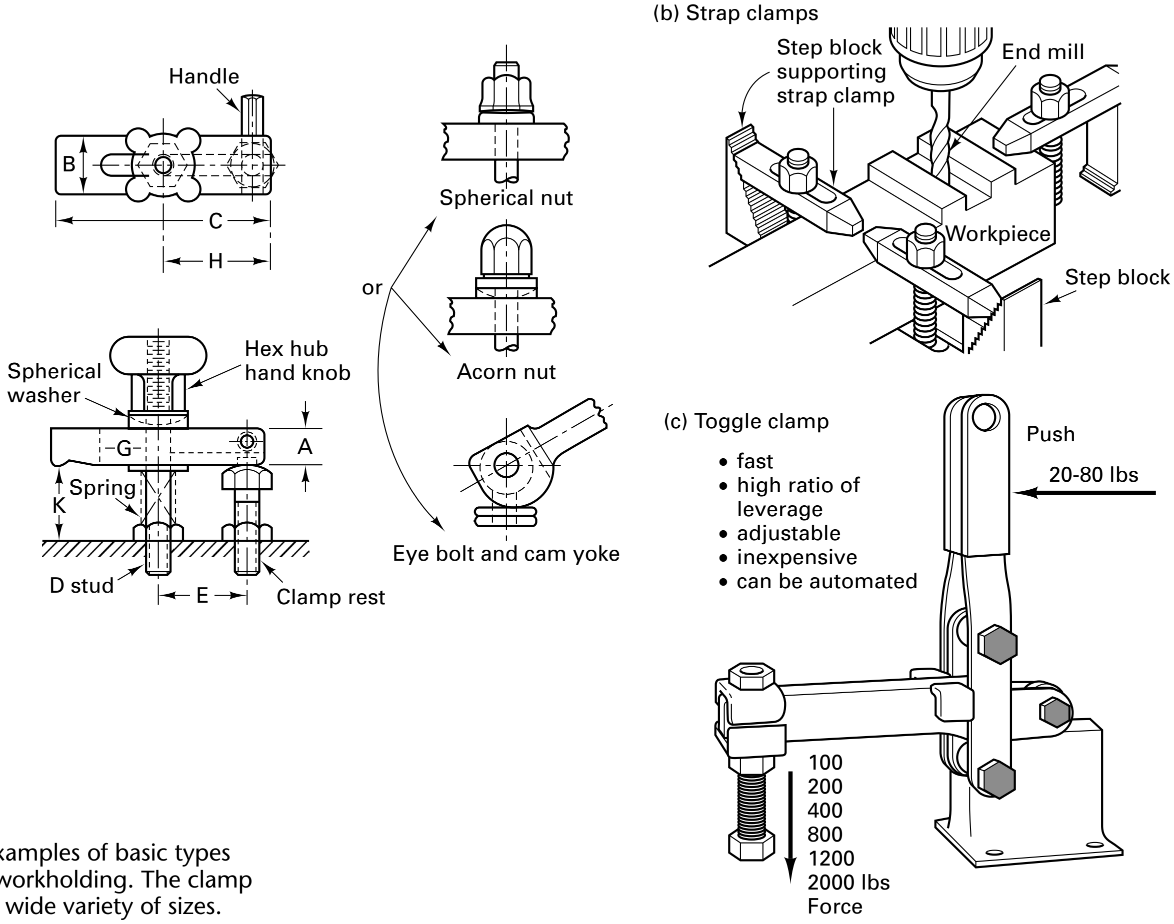

FIGURE 25-17 Examples of basic types of clamps used for workholding. The clamp elements come in a wide variety of sizes.

■ 25.12 CLAMPS

When designing a jig or fixture, there are many choices to be made regarding the clamps. Manual clamps, which include screw, strap, swing, edge, cam, toggle, and C-clamps, each with certain strengths and weaknesses, are usually cheaper but slower. In Figure 25-17 typical types of clamps that are used in fixtures are shown. The *strap clamp* comes in many forms and sizes and is simple, low cost, and flexible. The force can be applied by a hand knob, a cam, or a wrench turning down a nut. A conventional *toggle clamp* accommodates only small thickness variation from part to part yet provides an excellent, consistent clamping force.

Power-actuated clamps (shown in Figure 25-18) provide more consistent clamping forces than do manual clamps, especially in applications that promote operator fatigue. The higher cost must be weighed against the capability for consistent and repeatable operation, automatic adjustment of holding forces, remote actuations, and automating sequencing of clamping actions. *Extending clamps* operate in a manner similar to that of a manual clamp-strap assembly. They extend forward horizontally, then clamp down. *Edge clamps* have a very low profile. They clamp down and forward simultaneously.

■ 25.13 OTHER WORKHOLDING DEVICES

ASSEMBLY JIGS

Because *assembly jigs* usually must provide for the introduction of several component parts and the use of some type of fastening equipment, such as welding or riveting, they commonly are of the open-frame type. Such jigs are widely used in automobile body welding and aircraft assembly. Large jigs of the type are shown in Figure 25-19 are used for the assembly and usually feature automatic clips. This jig is constructed mainly of reinforced concrete.

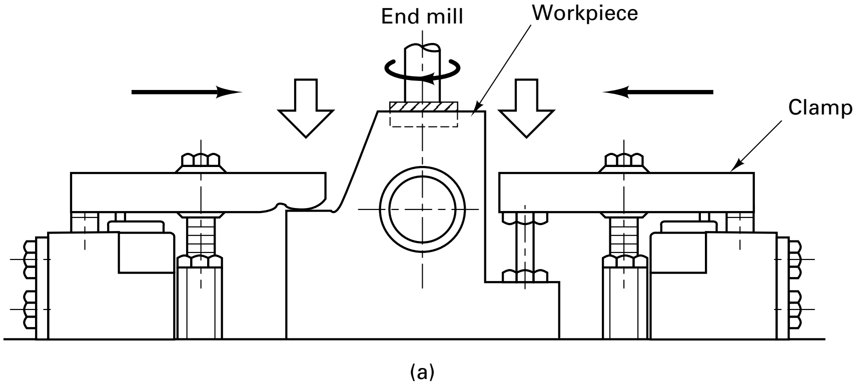

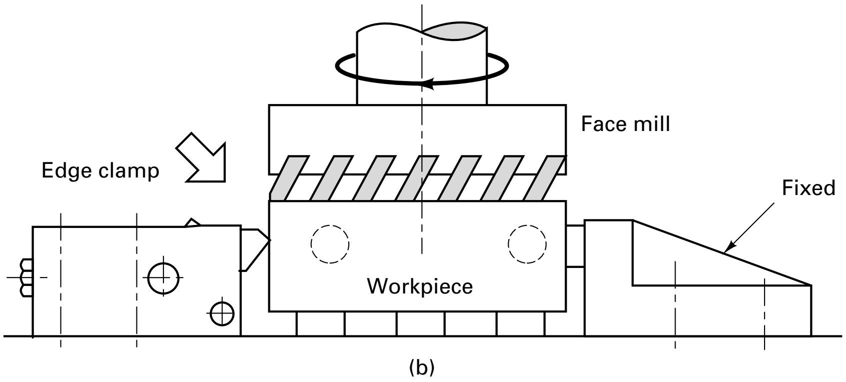

FIGURE 25-18 Examples of power-clamping devices: (a) extending clamp; (b) edge clamp.

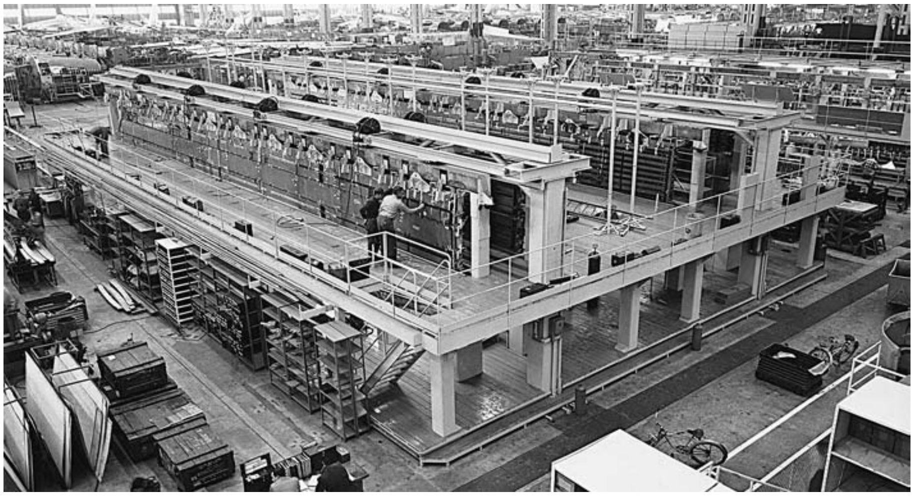

FIGURE 25-19 Example of large assembly jig for an airplane wing. The body of the wing and flap are held in the correct location with each other and then the flap is mechanically attached.

MAGNETIC WORKHOLDERS

Because of the light cuts and low cutting forces, workpieces can be held in a different manner on surface grinders than on other machine tools. *Magnetic chucks* are used for ferromagnetic materials. To obtain high accuracy, it is desirable to reduce clamping forces and distribute them over the entire area of the workpiece. Also, grinding is frequently done on quite thin or relatively delicate workpieces, which would be difficult to clamp by normal methods. In addition, there is often the problem of grinding a number of small, duplicate workpieces. Magnetic chucks solve all these problems very satisfactorily. Magnetic chucks are available in disk or rectangular shapes. Dry-disk rectifiers are used to provide the necessary direct-current power. Some magnetic chucks utilize permanent magnets, as shown in Figure 25-20, and can be tilted so that angles can be ground. Magnetic chucks provide an excellent means of holding workpieces provided that the

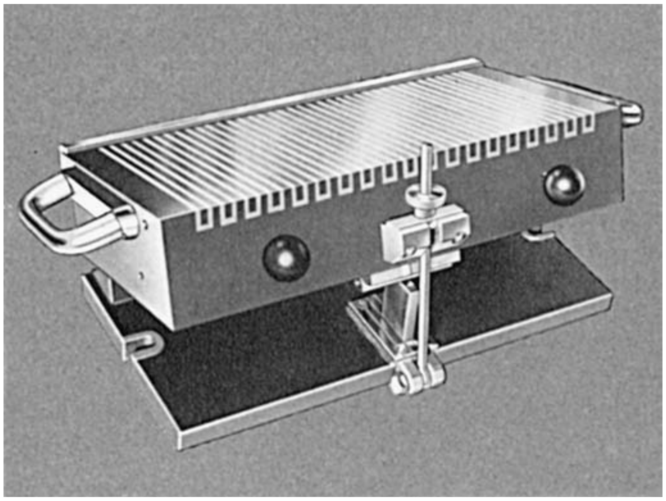

FIGURE 25-20 Example of magnetic chuck. *(Courtesy of O. S. Walker.)*

cutting or inertial forces are not too great. The holding force is distributed over the entire contact surface of the work, the clamping stresses are low, and therefore there is little tendency for the work to be distorted. Consequently, pieces can be held and ground accurately. Also, a number of small pieces can be mounted on a chuck and ground at the same time. Magnetic chucks provide great part-to-part repeatability because the holding power from one part to the next is the same. Initial setup is usually fast, simple, and relatively inexpensive. Parts loading and unloading is also relatively easy.

It often is necessary to demagnetize work that has been held on a magnetic chuck. Some electrically powered chucks provide satisfactory demagnetization by reversing the direct current briefly when the power is shut off.

ELECTROSTATIC WORKHOLDERS

Magnetic chucks can be used only with ferromagnetic materials. Electrostatic chucks can be used with any electrically conductive material. This principle (Figure 25-21) directs that work be held by mutually attracting electrostatic fields in the chuck and the workpiece. These provide a holding force of up to 20 psi (21,000 Pa). Nonmetal parts can usually be held if they are flashed (i.e., coated) with a thin layer of metal. These chucks have the added advantage of not inducing residual magnetism in the work.

VACUUM CHUCKS

Vacuum chucks are also available. In one type, illustrated in Figure 25-22, the holes in the work plate are connected to a vacuum pump and can be opened or closed by means of valve screws. The valves are opened in the area on which the work is to rest. The other type has a porous plate on which the work rests. The workpiece and plate are covered

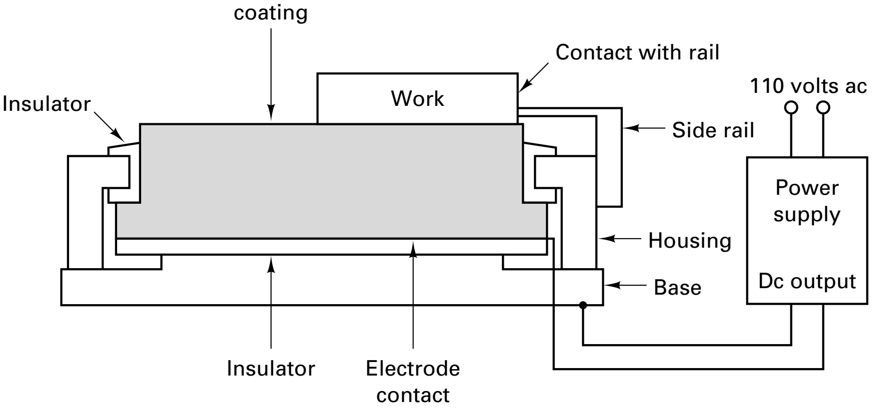

FIGURE 25-21 Principle of electrostatic chuck.

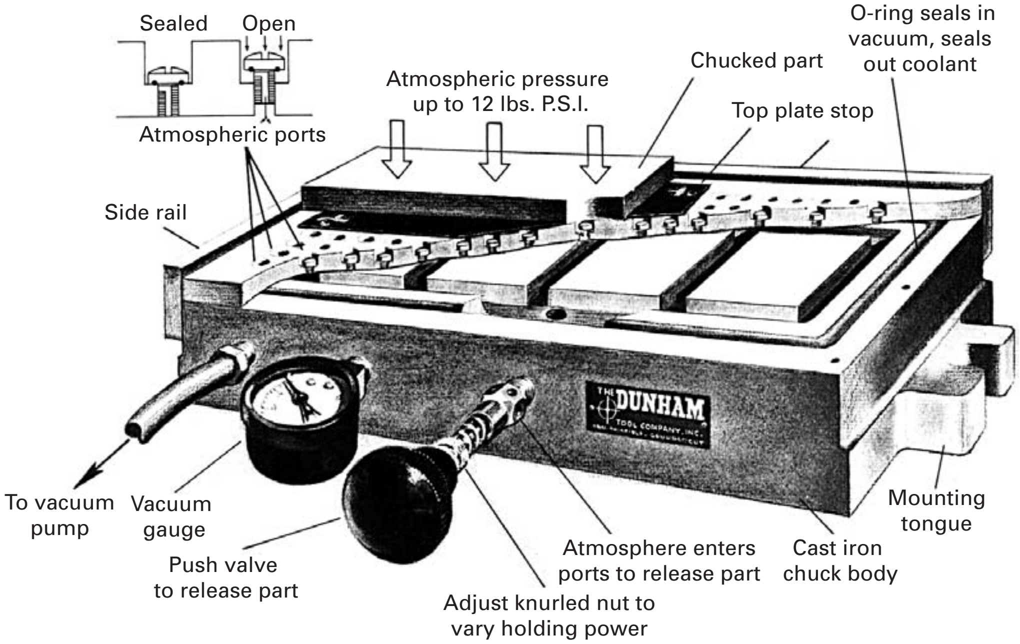

FIGURE 25-22 Cutaway view of a vacuum chuck. *(Courtesy of Dunham Tool Company, Inc.)*

with a polyethylene sheet. When the vacuum is turned on, the film forms around the workpiece, covering and sealing the holes not covered by the workpiece and thus producing a seal. The film covering the workpiece is removed or the first cut removes the film covering the workpiece. Vacuum chucks have the advantage that they can be used on both nonmetals and metals and can provide an easily variable force. Magnetic, electrostatic, and vacuum chucks are used for some light milling and turning operations.

As shown in Figure 25-23, T-slots are provided on milling machine tables so that workpieces can be clamped directly to the table. More often various workholding devices, called *vices* or *fixtures*, are utilized. Smaller workpieces are usually held in a vise mounted on the table. Fixtures designed to specifically hold a part in the correct location with respect to the tool are used for larger volumes. Fixtures reduce the time it takes to put the part in the machine and assure repeatable location with respect to the cutting tools. Fixtures provide clamping forces that counteract the cutting forces.

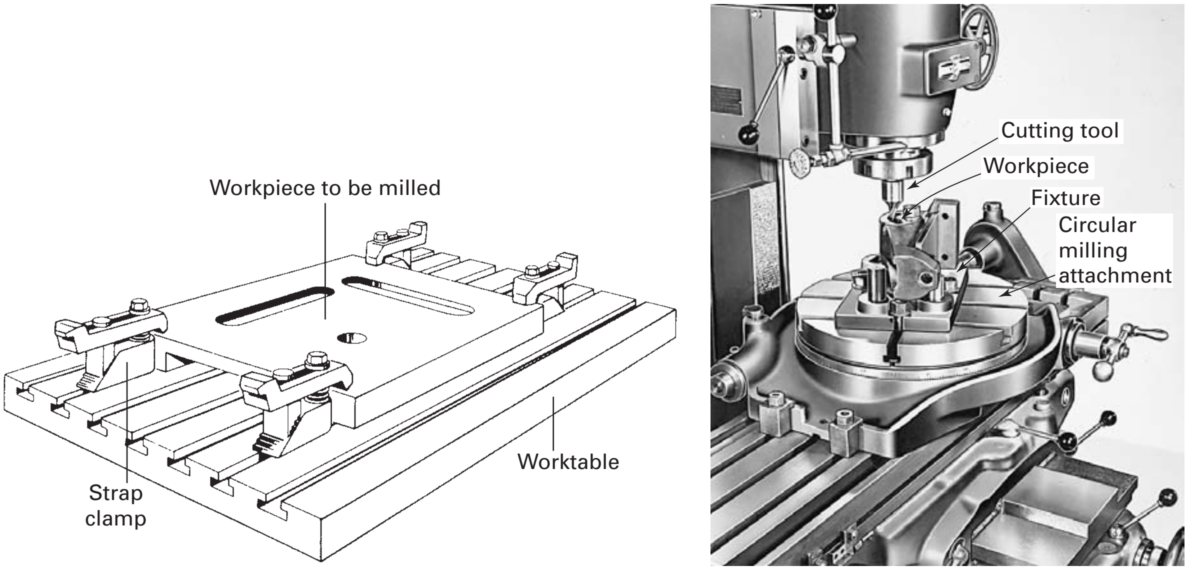

FIGURE 25-23 While the work can be clamped directly to the milling machines table (on the left), the workpiece on the right is located in a fixture mounted in a circular attachment located on the table, so a circular slot can be milled in the workpiece.

25.14 ECONOMIC JUSTIFICATION OF JIGS AND FIXTURES

As discussed previously, workholders are expensive, even when designed and constructed by using standard components. Obviously, their cost is a part of the total cost of production, and one must determine whether they can be justified economically by the savings in labor and machine cost and improvements in quality that will result from their use. Often it is only through the use of such devices that the design specifications can be met and sustained from part to part. To determine the economic justification of any special tooling, the following factors must be considered:

1. The cost of the tooling
2. Interest or profit charges on the tooling cost
3. The savings resulting from the use of the tooling; can result from reduced cycle times or improved quality or lower-cost labor
4. The savings in machine cost due to increased productivity
5. The number of units that will be produced using the tooling

The economic relationship between these factors can be expressed in the following manner:

$$\text{savings per piece (exclusive of tooling costs)} \geq \text{additional cost per piece}$$

$$\left\{\begin{matrix}\text{total cost per piece}\\ \text{without tooling}\end{matrix}\right\} - \left\{\begin{matrix}\text{total cost per piece}\\ \text{using tooling}\\ \text{(exclusive of tooling cost)}\end{matrix}\right\} \geq \text{tooling cost per piece}$$

$$\overbrace{\begin{matrix}\text{labor cost}\\ \text{per piece}\\ \text{without}\\ \text{tooling}\end{matrix} + \begin{matrix}\text{machine and}\\ \text{overhead cost}\\ \text{per piece}\\ \text{without tooling}\end{matrix}} - \overbrace{\begin{matrix}\text{labor cost}\\ \text{per piece}\\ \text{with}\\ \text{tooling}\end{matrix} + \begin{matrix}\text{machine and}\\ \text{overhead cost}\\ \text{per piece}\\ \text{with tooling}\end{matrix}} \geq \overbrace{\begin{matrix}\text{cost}\\ \text{of}\\ \text{tooling}\end{matrix} + \begin{matrix}\text{interest on}\\ \text{tooling cost}\end{matrix}}$$

$$[(R)(t) + (R_m)(t)] - [R_t)(t_t) + (R_m)(t_t)] \geq \frac{C_t + (C_t/2)(n)(i)}{N} \qquad (25\text{-}2)$$

where

R = labor rate per hour, without tooling

R_t = labor rate per hour, using tooling

t = hours per piece, without tooling

t_t = hours per piece, using tooling

R_m = machine cost per hour, including all overhead

C_t = cost of the special tooling

n = number of years tooling will be used

i = interest rate (or what invested capital is worth)

N = number of pieces that will be produced with the tooling

Equation 25-2 can be expressed in a simpler form:

$$(R + R_m)t - (R_t + R_m)t_t \geq \frac{C_t}{N}\left(1 + \frac{n \times i}{2}\right) \qquad (25\text{-}3)$$

This equation assumes straight-line depreciation and computes interest on the average amount of capital invested throughout the life of the tooling.[1] When the time over

---

[1] For the use of more sophisticated economic analysis, see C. S. Park, *Contempory Engineering Economics*, 2nd ed., New York, Wiley, 1999.

which the tooling is to be used is less than one year, companies often do not include an interest cost. If this factor is neglected, the right-hand term of equation 25-3 reduces to C_t/N.

The equations assume that the material cost will be the same regardless of whether or not special tooling is used. This is not always true. Although these equations are not completely accurate for all cases, they are satisfactory for determining tooling justification in most cases, because the life of tooling for machine tools seldom exceeds five years and often does not exceed two years. The equation does not include the cost of poor quality. This can be included by estimating the decrease in the number of defective parts when the workholder is used versus when it is not used.[2]

The following example illustrates the use of equation 25-3 to determine tooling justification for a dedicated jig. In drilling a series of holes on a radial drill, the use of a drill jig will reduce the time from $^1/_2$ hour per piece to 15 minutes per piece. If a jig is not used, a machinist, whose hourly rate is \$18/hr, must be used. If the jig is used, the job can be done by a machinist whose rate is \$12/hr. The hourly rate for the radial drill is \$32/hr.

The cost of making the jig would include \$350 for design, \$150 for material, and 50 hours of toolmaker's labor, which is charged at the rate of \$22/hr to include all machine and overhead costs in the toolmaking department. Investment capital is worth 16% to the company. It is estimated that the jig would last three years and that it would be used for the production of 300 parts over this period. Is the jig justified?

The cost of the jig, C_t, is estimated to be

$$C_t = \$350 + \$150 + \$150 + \$22 \times 50\text{hr} = \$1{,}600$$

Substituting the values given in equation 25-3, we find:

$$(18 + 32)0.5 - (12 + 32)0.25 \geq \$\frac{1600}{300}\left(1 + \frac{3 \times 0.16}{2}\right)$$

$$\text{or } 14.00 \cong 13.76$$

So this jig is not justified based on cost savings.

One could also ask how many parts would have to be produced with the jig to break even (i.e., increased costs just equal savings). By omitting the value 300 in the solution above and solving for N, it is found that at least 1627 pieces would have to be produced annually with the jig for it to break even.

This analysis assumes that the time (of the people and machines) saved by the use of the special tooling can be used for other productive work. If this is not the case, the cost analysis should be altered to take this important fact into account. Otherwise, the tooling justification may be substantially in error.

The application of group technology, NC machines, and lean manufacturing techniques may eliminate the need for designing and building a new jig or fixture every time a new part is designed. New measures of manufacturing productivity that include terms for quality and flexibility are being developed.

---

[2] For a discussion of new measures and methods on cost accounting, see C. S. Park, "Counting the Costs," January 1987, *Mechanical Engineering*, p. 66.

■ Key Words

3-2-1 principle
assembly jig
box jig
channel jigs
clamping
electrostatic workholder
fixture
intermediate jig concept
jig
leaf jig
location
magnetic chuck
plate jig
ring jig
strap clamp
toggle clamp
vacuum chuck
workholder

Review Questions

1. What are the two primary functions of a workholding device?
2. What distinguishes a jig from a fixture?
3. An early treatise defined a jig as "a device that holds the work and guides a tool." Why was this definition incorrect?
4. What modifications do you need to make to an ordinary vise so it can be a fixture?
5. What basic criteria should be considered in designing jigs and fixtures?
6. In any part drawing, what are the critical surfaces of a part (i.e., what makes a part surface critical)? (This question requires an understanding of basic part drawings.)
7. What difficulties can result from not keeping clamping stresses low in designing jigs and fixtures?
8. Explain the 3-2-1 concept for workpiece location in a workholder on a machine tool.
9. Which of the basic design principles relating to jigs and fixtures would most likely be in conflict with the 3-2-1 location concept?
10. What are two reasons for not having drill bushings actually touching the workpiece? How many of the designs shown in this chapter violate this rule? It is not uncommon to have conflicts and trade-offs in fixture design situations.
11. Why does the use of down milling often make it easier to design a milling fixture than if up milling were used?
12. Name another example of the intermediate workholder concept aside from the video cassette.
13. A large assembly jig for an airplane-wing component gave difficulty when it rested on four-point support. The assembled wing components were not consistent in shape. It was satisfactory when only three supporting points were used. Why?
14. Explain why the use of a given fixture may not be economical when used with one machine tool but may be economical when used in conjunction with another machine tool.
15. What are rollover jigs, and what advantages do they offer?
16. In the clamps shown in Figure 25-17, what is the purpose of the spherical washer?
17. What are other common types of clamps?
18. What is the purpose of dimensioning the strap-clamp assembly in Figure 25-17 with letters?
19. Figure 25-8 showed the part sitting on locator buttons. Why not have the part rest on the flat plate?
20. In Figure 25-8, why aren't there three points put on the x-plane, two points on the z-plane, and one point on the y-plane?
21. Which set of locators in Figure 25-8 establishes the A dimension on the part?
22. To prepare the workpiece shown in Figure 25-8, which surface would you have milled first—the bottom, the back, or the front?
23. For the part shown in Figure 25-8, why don't you drill the holes first, then mill? Why mill at all?
24. Notice that the holes in the part in Figure 28-8 need to be countersunk after they are drilled. How must the jig be designed to put the countersinks on the mounting holes while the part is in the jig, or would this operation be done afterward?

Problems

1. Using the following values, determine the number of pieces that would have to be made to justify the use of a jig costing $3000.

   $R = \$5.75$
   $R_t = \$4.50$
   $t_t = 1\,{}^1\!/_4$
   $t = 2\,{}^1\!/_2$
   $I = 10\%$
   $R_m = \$4.50$
   $N = 3$

2. Suppose in the sample problem at the end of this chapter that modular fixturing is used, which reduces the toolmaker's labor to 4 hours and the design cost to $100 (4 hours at $25 per hour), and that the material cost (modular elements) for the subplate structural elements, clamps, and so on was $600. What is the break-even quantity for a modular fixture? (*Note:* The modular fixture is used for the job, then disassembled and returned to the tool room. The parts are reused in other workholders.)
3. Suppose the leaf jig in Figure 25-A could be improved by replacing the screw clamp with swing clamps. See Figure 25-A. Many things are needed to be able to cost justify the improvement in the jig. This problem requires that the engineer estimate or determine the following:
   1. How much time is saved with a swing clamp (in the loading and unloading) cycle?
   2. How much does a swing clamp cost?
   3. How much will it cost to modify the existing jig?

   Currently, for this job, the machining cycle time to drill the hole is 30 sec, the unload/load time is 30 sec, the operator is getting $12/hr, and the machine cost is $30/hr.
4. Examine Figure 25-23. The part has a circular slot in the top. How else could you produce this slot?

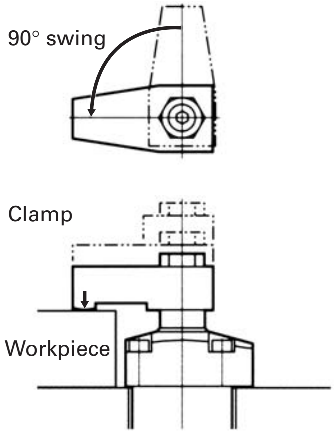

FIGURE 25-A Forces on a 1500-lb work piece produced by face milling.

Chapter 25 CASE STUDY

Fixture versus No Fixture in Milling

Design engineering has sent down to manufacturing engineering a drawing that calls for a surface $4\frac{1}{2}$ inches wide by 10 in. long to be rough milled with a depth of cut of 0.30 in.

A 16-tooth cemented carbide face mill 150 mm (6 in.) in diameter has been selected for the job. The material is medium hard cast iron (220 to 260 Bhn).

This surface is to be milled on a large number of identical pieces. The estimated time to unload and load a piece in a fixture is 0.30 minutes. Here are three possible choices of machine setup you could use to do this job.

1. Face milling on a vertical spindle milling machine (NO fixture, 6 minutes to remove part from table and bolt up a new part).
2. String milling with three pieces 0.6 in. apart in a fixture.
3. Index base milling (0.15 minute required to index the base) on a vertical single spindle mill where the operator is unloading/loading the index table while the alternate piece is being machined (2 fixtures required).

Which arrangement should be selected based on your estimated operation time per piece and your estimated fixture cost per piece?

CHAPTER 26

NUMERICAL CONTROL (NC) AND THE A(4) LEVEL OF AUTOMATION

26.1 INTRODUCTION

The first numerically controlled (NC) machine tool was developed in 1952 at the Massachusetts Institute of Technology (MIT). It had three-axis positional feedback control and is generally recognized as the first NC machine tool. By 1958, the first NC *machining center* was being marketed by Kearney and Trecker. A machining center was a compilation of many machine tools capable of performing many processes (milling, drilling, tapping, and boring), as shown in Figure 26-1. This NC machine had a tool changer and could automatically change tools. Almost from the start, computers were needed to help program these machines. Within 10 years, NC machine tools had become computer numerical control (CNC) machine tools with onboard microprocessors and could be programmed directly.

With the advent of the NC type of machine (and, more recently, programmable robots), two types of automation were defined. *Hard* or *fixed automation* is exemplified by transfer machines or automatic screw machines controlled by a mechanical cam. *Flexible* or *programmable automation* is typified by CNC machines or robots that can be taught or programmed externally by means of computers. The control is in computer software rather than mechanical hardware.

You may not be familiar with the concept of feedback control, where some aspect (usually position) of the process is measured using a detection device (sensor). This information is fed back to an electronic comparator, housed in the machine control unit (MCU), which makes comparisons with the desired level of operation. If the output and input are not equal, an error signal is generated and the table is adjusted to reduce the error.

For a milling machine, Figure 26-2 shows the difference between an open-loop machine and a closed-loop machine, with feedback provided on the location of the table and the part with respect to the axis of the spindle of the cutting tool. Three position control schemes are shown.

In CNC turning machines, the feedback is on the tool tip with respect to the rotating part creating tool paths. Figure 26-3 shows how a part can be turned (machined) from a round bar in a CNC lathe. A program is written that directs the machine to execute the necessary roughing and finishing passes.

$$\text{number of rough passes} = \frac{\text{stock diameter} - \text{minimum diameter} + \text{finish}}{\text{depth of cut} \times 2}$$

In this case, eight roughing passes and one finishing cut were specified.

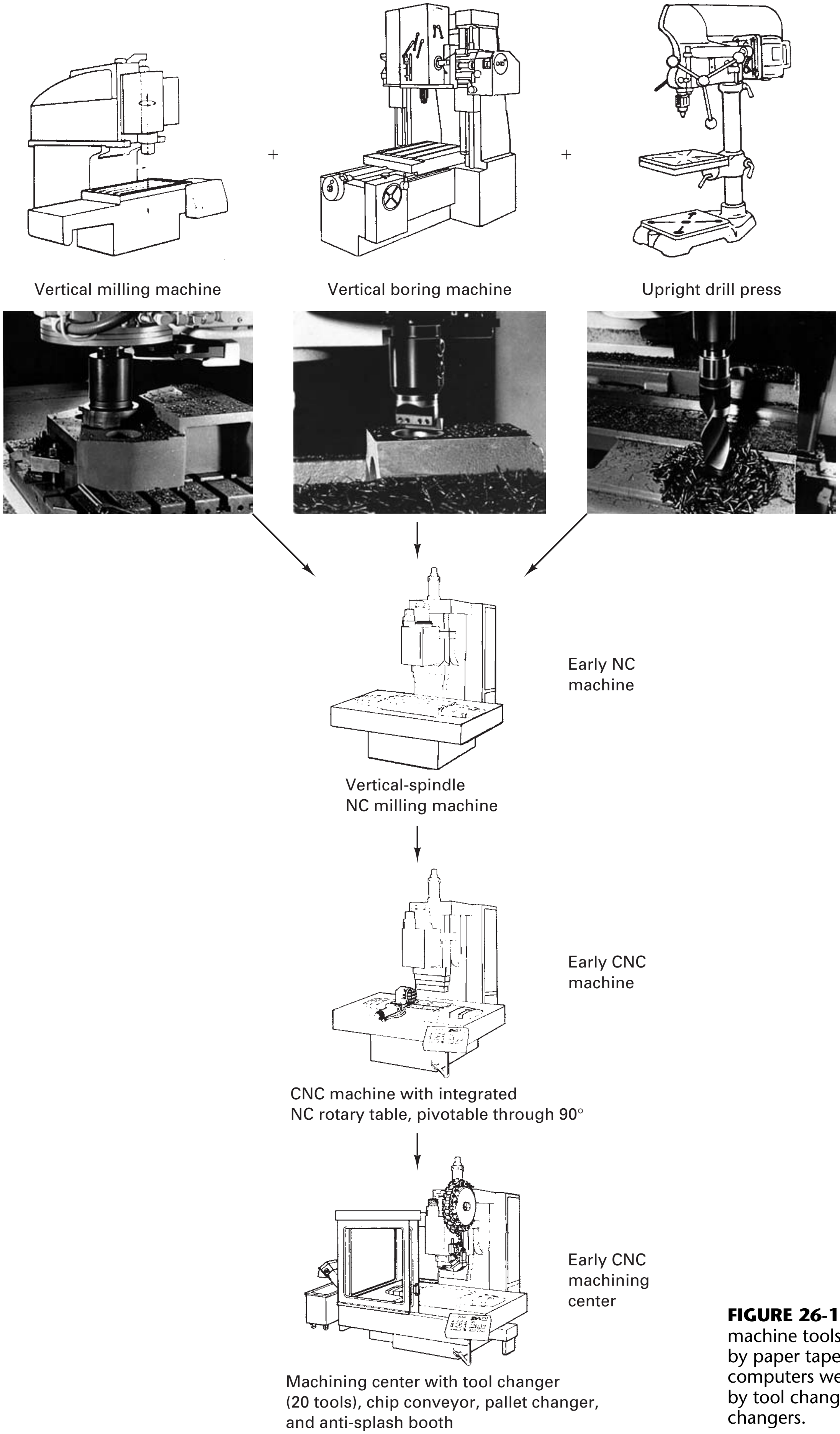

FIGURE 26-1 Early NC machine tools were controlled by paper tape. Soon onboard computers were added, followed by tool changers and pallet changers.

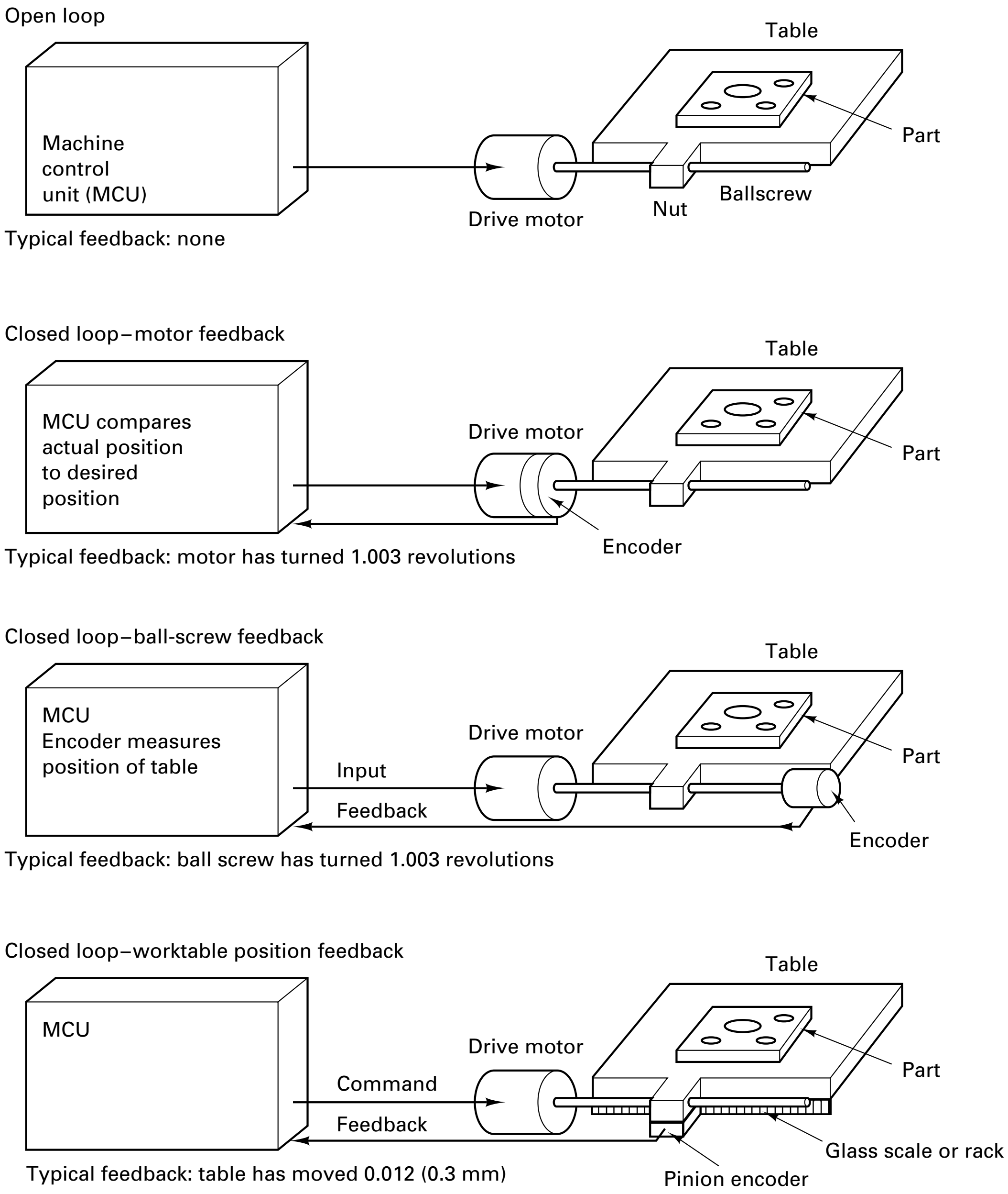

FIGURE 26-2 Open-loop NC versus three position control schemes for NC and CNC machine tools.

BRIEF HISTORY OF NUMERICAL CONTROL AND FLEXIBLE MANUFACTURING SYSTEMS (FMSs)

The advent and wide scale adoption of numerically (tape- and computer-) controlled machine tools has been the most significant development in machine tools in the past 60 years. These machines raised automation to a new level by providing positional feedback as well as programmable flexibility to machine tools. Numerical control of machine tools created entirely new concepts in manufacturing. Certain operations are now routine that previously were very difficult, if not impossible, to accomplish.

However, NC impacts on machine tools were greater than expected. Machine tools had to be redesigned to sustain more wear and tear on the drives, gears, and motors, and made better (more precise) because the operator no longer controlled the position of the work in respect to the cutting tool. The machines cost more (for controls and precision), with automatic tool changers and pallet changers quickly being added to make the NC machine a "machining center."

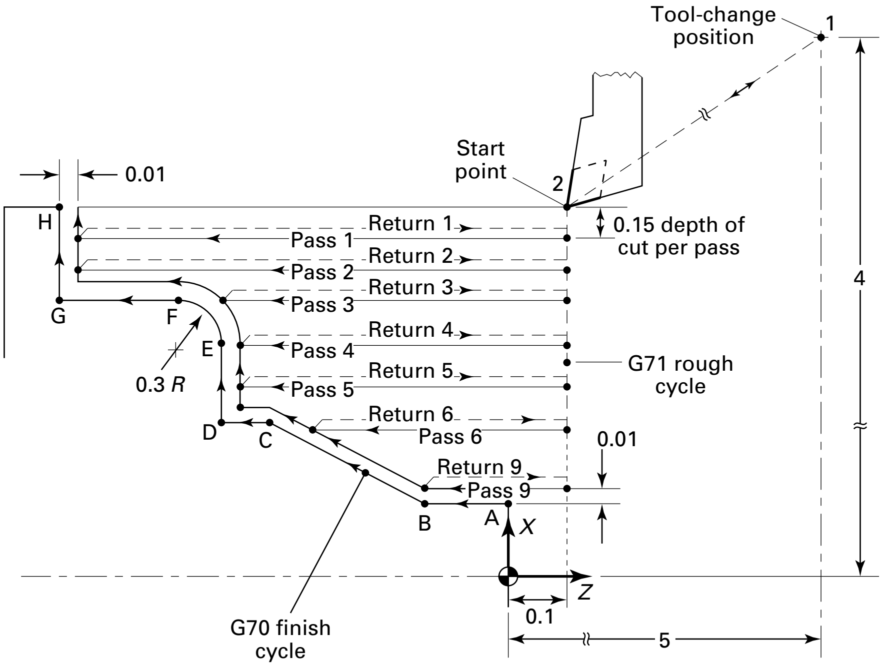

Point	X (in.) diameter	Z (in.)
2	4.5	0.1
A	1.8	0
B	1.8	–0.9
C	2.6	–2.6
D	2.6	–2.9
E	3.1	–2.9
F	3.7	–3.2
G	3.7	–3.8
H	4.5	–3.8

FIGURE 26-3 The tool paths necessary to rough and finish turn a part in a CNC lathe are computer generated using G codes.

In earlier years, highly trained NC programmers were required. The development of low-cost, solid-state microprocessing chips resulted in machines that can be quickly programmed by skilled machinists after only a few hours of training, using only simple machine shop language. As a consequence, today almost all manufacturing facilities, from the largest to the smallest job shops, have one or more numerically controlled machine tools in routine use.

NC came into being to fill a need. The U.S. Air Force (USAF) and the airframe industry were seeking a means to manufacture complex contoured aircraft components to close tolerances on a highly repeatable basis. John Parsons of the Parsons Corporation of Traverse, Michigan, had been working on a project to solve this problem; in 1947 he and his engineers developed a machine that would machine templates to be used for inspecting helicopter blades. He conceived of a machine (a jig borer) that was controlled by numerical data to make these templates and took his proposal to the USAF. Parsons convinced the USAF to fund the development of a machine. Subsequently, MIT was subcontracted to build the first NC machine in 1949. The prototype was a conventional two-axis tracer mill retrofitted with servomechanisms. As luck would have it, the servomechanism lab was located next to a lab where one of the very first digital computers (Whirlwind) was being developed. This computer generated the digital numerical data for the servomechanisms, and in 1952 a modified three-axis Cincinnati Hydrotel milling machine was demonstrated.

In 1962, 35 billion was spent on machine tools and NC machines accounted for about 10% of total. Early on, NC machines were continuous-path or contouring machines where the entire path of the tool was controlled with close accuracy in regard to position and velocity, and the large aerospace companies had many home-made NC machines. Today, milling machines, machining centers, laser beam and water-jet cutting machines, and lathes are popular applications of continuous-path control requiring feedback control. Next, point-to-point machines were produced in which the path taken between operations was relatively unimportant and therefore not monitored continuously. Point-to-point machines are used primarily for drilling, milling straight cuts, cutoff, and punching. Automatic tool changers, which require that the tools be precisely set to a given length prior to installation in the machines, permitted the merging of many into

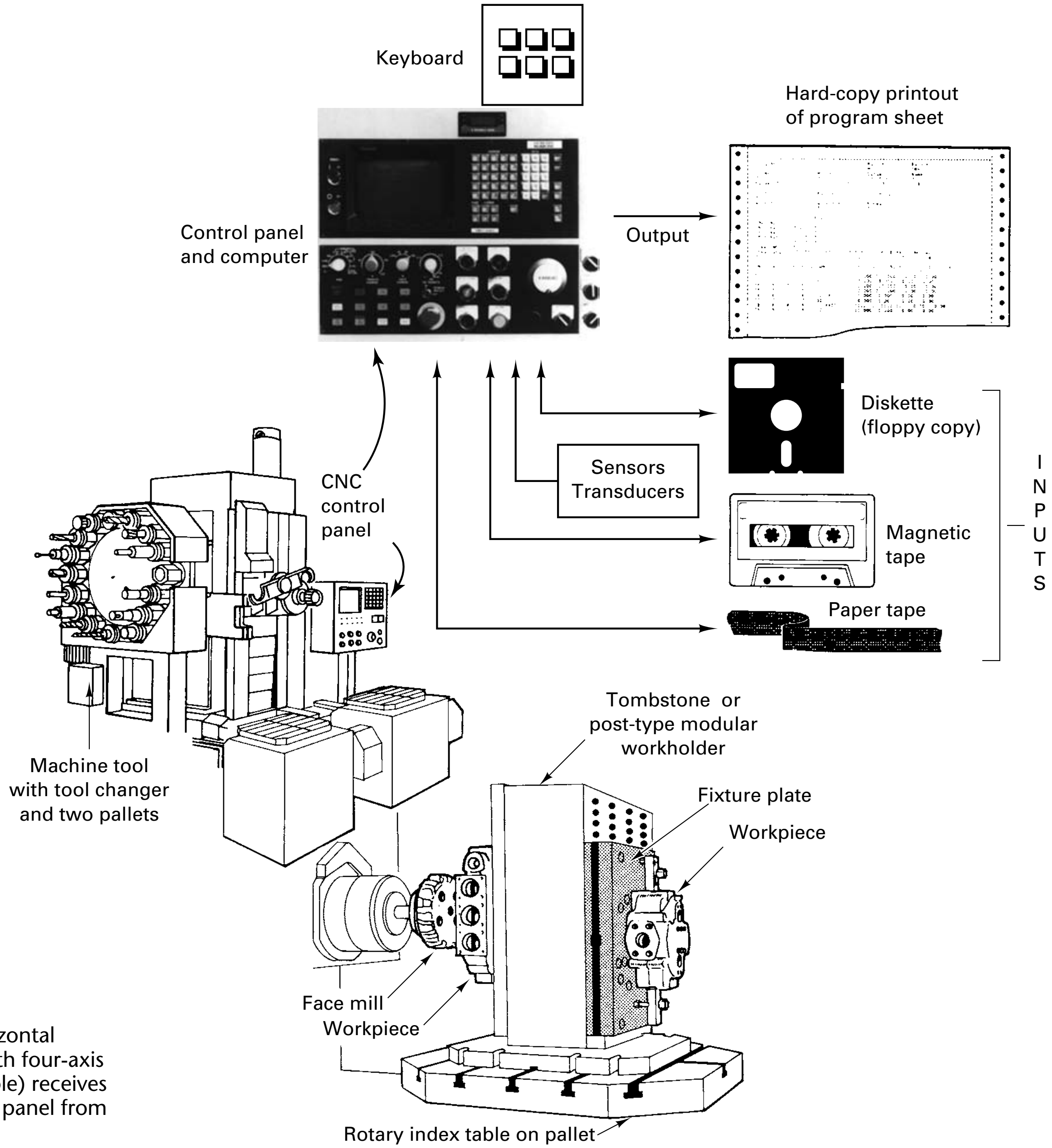

FIGURE 26-4 Horizontal machining center with four-axis control (*X, Y, Z, R* table) receives inputs to the control panel from many sources.

one machine. Modern machines are often equipped with two pallets so that one can be set up while the other is working. The two-sided (or four-sided) "tombstone" fixture shown in Figure 26-4 has multiple mounting and locating holes for attaching part-dedicated fixture plates, which greatly extends the utility of a horizontal machining center.

During the early days of NC, the machine tools had to be programmed using a machine control language, a difficult, time-consuming task prone to error. Many companies developed computer languages to aid the NC programming task, each developing a different language to describe tool geometry, tool movements, and machining instructions. Confusion reigned.

The USAF sponsored the placement of many NC machines in the major aerospace companies. The companies soon concluded that a universally accepted NC programming language was needed. Under the auspices of the Aerospace Industries Association (AIA), these companies, with the USAF, sponsored additional research at MIT to develop a computer language that would use simple English-like statements to produce an output that would control the NC machines. This language, called *APT* (automatically programmed tools), was introduced by MIT in 1959, when computer technology was in its adolescence. Hundreds of thousands of parts have been programmed using APT, running initially on large mainframe computers. The output from the APT program had to be converted to the language of a particular machine. This was called *postprocessing*. Traditional postprocessing yields NC workpiece programs that are not exchangeable. To machine an identical workpiece on another machine, the program must be postprocessed again unless the machine and control are exactly the same.

With the arrival of high-resolution *computer-aided design* (CAD) graphics, many people thought that APT would be phased out. But when complex tool control is required for complex parts, APT or one of its many offspring is still used. The chief problems in NC programming were tool radius compensation and tool path interpolation (discussed later). Computer software with the capability to perform linear, circular, parabolic, and other kinds of interpolations were developed. The capabilities were included in APT, and such software programs are now routinely available on CNC machines.

In the 1960s, it was envisioned that a large computer could be used directly to control, in real time, a number of machines. A limited number of *direct numerical control* (DNC) systems were developed, with the idea that the programs were to be sent directly to the machines (eliminating paper tape handling). The mainframe computer would be shared on a real-time basis by many machine tools. The machine operator would have access to the main computer through a remote terminal at the machine, while management would have up-to-the-minute data on production status and machine utilization. This version of DNC had very few takers. Instead, NC machines became *computer numerical control* (CNC) machines through the development of small, inexpensive computer microprocessors with large memories. These onboard computers have every sort of input imaginable coupled with functions such as program storage, tool offset and tool compensation, program-editing capability, various degrees of computation, and the ability to send and receive data from a variety of sources, including remote locations. The computer can store multiple-part programs, recalling them as needed for different parts. As the software and controllers developed, it was immediately found that the machine tool operator could readily learn how to program these machines (manually) for many component parts, often eliminating the need for a part programmer.

In recent years the DNC concept has been revived with the small but powerful computers on the machine tools being networked to a larger computer to provide enhanced computer memory and computational capacity. Therefore, DNC now means *distributed numerical control,* with the distribution of NC programs by a central computer to individual CNC units. And so emerged a special type of manufacturing system called the flexible manufacturing system, or FMS. Historically speaking, the first examples of FMS systems appeared in the late 1960s, but few companies adopted them because of their high initial cost.

FLEXIBLE MANUFACTURING SYSTEMS

The development of FMSs began in England and the United States simultaneously in the 1960s. By combining the repeatability and productivity of the transfer line with the programmable flexibility of the NC machine, a variety of parts could be produced on the same set of machines. In the United States the first systems were called variable mission or flexible manufacturing systems. In the late 1960s Sundstrand installed a system for machining aircraft speed drive housings that was used for over 30 years. Overall, however, very few of these systems were sold until the late 1970s and early 1980s, when a worldwide FMS movement began. But even today international trade in FSM is not significant, and there are fewer than 2000 systems in the world (less than 0.1% of the machine tool population). There is also some evidence that the market for these large, expensive systems became saturated around the mid-1980s.

Essentially, the FMS permits (schedules) the products to take random paths through the machines. This system is fundamentally an automated, conveyorized, computerized job shop so the system is complex to schedule. Because the machining time for different parts varies greatly, the FMS is difficult to link to an integrated system and often remains an island of very expensive automation.

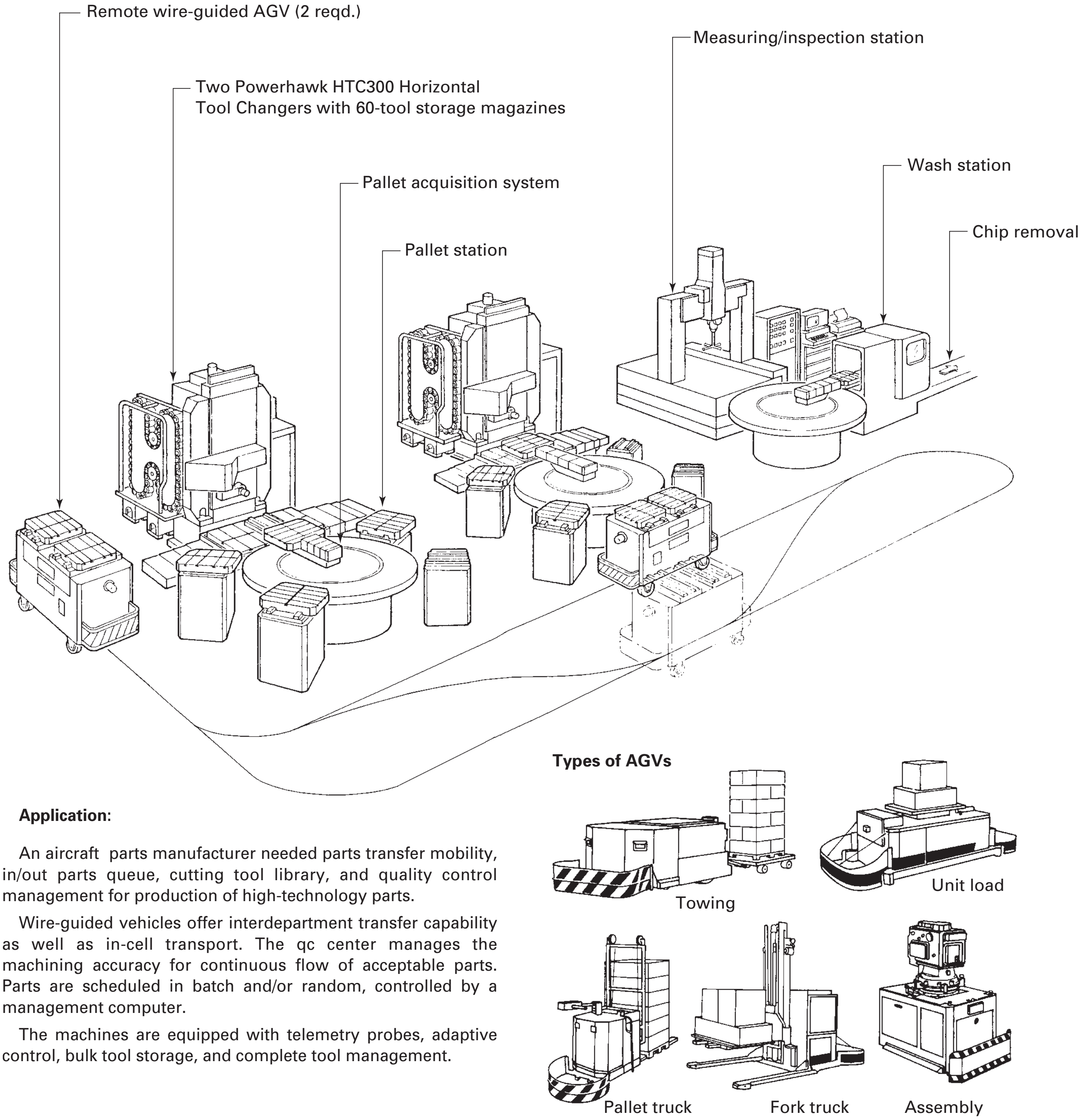

Application:

An aircraft parts manufacturer needed parts transfer mobility, in/out parts queue, cutting tool library, and quality control management for production of high-technology parts.

Wire-guided vehicles offer interdepartment transfer capability as well as in-cell transport. The qc center manages the machining accuracy for continuous flow of acceptable parts. Parts are scheduled in batch and/or random, controlled by a management computer.

The machines are equipped with telemetry probes, adaptive control, bulk tool storage, and complete tool management.

FIGURE 26-5 An example of a sophisticated FMS developed for machining aircraft parts. A wire-guided cart called an AGV (automated guided vehicle) is used to transport pallets from the unload/load station to the machines.

About 60 to 70% of FMS implementations are for components consisting of nonrotational (prismatic) parts such as crankcases and transmission housings. Figure 26-5 depicts an FMS with two machine tools serviced by a pallet system and an automated guided vehicle (AGV). The balance of FMS installations are for rotational parts or a mixture of both types of parts.

The number of machine tools in an FMS varies from 2 to 10, with 3 or 4 being typical. Annual production volumes for the systems are usually in the range of 3000 to 10,000 parts, the number of different kinds of parts ranging from 2 to 20, with 8 being typical. The lot sizes are typically 20 to 100 parts, and the typical part has a machining time of

TABLE 26-1 Common Features of Flexible Manufacturing Systems

Pallet changers
Multiple machine tools: NC or CNC
Automated material handling system (to deliver parts to machines)
Computer control for system: DNC
Multiple parts: Medium-sized lots (200–10,000) with families of parts
Random sequencing of parts to machines (optional)
Automatic tool changing
Inprocess inspection
Parts washing (optional)
Automated storage and retrieval (optional, to deliver parts to system)

about 30 minutes with a range of 6 to 90 minutes per part. Each part typically needs two or three chuckings or locating positions and 30 or 40 machining operations. Early on, NC machining centers were used, but in recent years, CNC machine tools have been favored, leading to a considerable number of systems being operated under direct numerical control. The machining centers always have tool changers. To overcome the limitation of a single spindle, some systems are being built with head changers. These are sometimes referred to as modular machining centers.

Common features of FMSs (see Table 26-1) are *pallet changers,* underfloor conveyor systems for the collection of chips (not shown), and a conveyor system that delivers parts to the machine. This is also an expensive part of the system, as the conveyor systems are either powered rollers, mechanical pallet transfer conveyors, or AGVs operating on underground towlines or buried guidance cables. The carts are more flexible than the conveyors. The AGVs also serve to connect the islands of automation, operating between FMSs and replacing human guided vehicles (forklift trucks).

Pallets are a significant cost item for the FMS because the part must be accurately located on the pallet and the pallet accurately located in the machine. Since many pallets are required for each different component, a lot of pallets are needed and they typically represent anywhere from 15 to 20% of the total system cost. FMSs cost about $1 million per machine tool. Thus the seven-machine FMS costs $6 million for hardware and software, with the transporter costing over $1 million.

Computer Control in FMS. The CNC machines receive programs as needed from a host minicomputer, which acts as a supervisory computer for the system, tracking the status of any particular machine in the system. In recent years, in-process inspection, detection, and automatic tool position correction for tool wear and breakage have been added because a very common problem with these systems is the monitoring of the tool condition and performance. Most installations also incur problems in the performance and reliability of the software and the control systems. Because it may take just as long to debug software as it does to debug hardware, delays of two to six months in startup are not uncommon.

However, operators are typically needed to load workpieces, unload finished parts, change worn tools, and perform equipment maintenance and repairs. CNC and DNC functions are often incorporated into a single FMS. The system can usually monitor piece-part counts, tool changes, and machine utilization, with the computer also providing supervisory control of the production. The workpieces are launched randomly into the system, which identifies each part in the family and routes it to the proper machines. The systems generally display reduced manufacturing lead time, low in-process inventory, and high machine tool utilization, with reduced indirect and direct labor. The materials-handling system must be able to route any part to any machine in any order and provide each machine with a small queue of "banked parts" waiting to be processed so as to maximize machine utilization. Convenient access for loading and unloading parts, compatibility with the control system, and accessibility to the machine tools are other necessary design features for the material handling system.

The computer control system for an FMS typically has three levels. The master control monitors the entire system for tool failures or machine breakdowns, schedules the work, and routes the parts to the appropriate machine. The DNC computer distributes programs to the CNC machines and supervises their operations, selecting the required programs and transmitting them at the appropriate time. It also keeps track of the completion of the cutting programs and sends this information to the master computer. The bottom level of computer control is at the machines themselves.

It is difficult to design an FMS because it is, in fact, a very complex assembly of elements that must work together. Designing the FMS to be flexible is also difficult. Many companies have found that between the time they ordered their system and the time they had it installed and operational, design changes had eliminated a number of parts from the FMS. That is, the system was not as flexible as they thought. Figure 26-6 shows some typical FMS designs. Today a popular system has only one (or two) machining centers, with an automatic storage and retrieval system (ASRS) to provide the machine with a continuous supply of parts during all three shifts. This design is called a flexible manufacturing cell (FMC). FMSs are, in fact, classic examples of supermachines. Such large, expensive systems must be examined with careful and complete planning. It is important to remember that even though they are often marketed and sold as a *turnkey* installation (the buyer pays a lump sum and receives a system that can be turned on and run), this is only rarely possible with a system that has so many elements that must work together reliably. Taken in the context of integrated manufacturing systems, large FMSs may be difficult to synchronize to the rest of the system. The flexibility of the FMS requires variable speeds and cycles, numerical control, and a supervisory computer to coordinate cell operation. In the long run, smaller manned or unmanned cells may well be the better solution, in terms of system flexibility. Perhaps a better name for these systems would be *variable mission* or *random-path manufacturing systems.*

Many companies elect to identify the families of parts around which the FMS is designed, which greatly improves the utilization of the FMS. One might say that FMSs were developed before their time, since they are being more readily accepted since group technology has been used (at least conceptually) to identify families of parts for the system to produce.

As an FMS generally needs about three or four workers per shift to load and unload parts, change tools, and perform general maintenance, it cannot really be said to be self-operating. FMS systems are rarely left untended, as in third-shift operations. Other than the personnel doing the loading and unloading, the workers in the FMS are usually highly skilled and trained in NC and CNC. Most installations run fairly reliably (once they are debugged) over three shifts, with uptime ranging from 70 to 80%, and many are able to run on one shift untended.

■ 26.2 BASIC PRINCIPLES OF NUMERICAL CONTROL

NC uses a processing language to control the movement of the cutting tool or workpiece or both. The programs contain information about the machine tool and cutting tool geometry, the part dimensions (from rough to finish size), and the machining parameters (speeds and feeds and depth of cut). Thus NC machines can duplicate consecutive parts, and a part made at a later date will be the same as one made today. Repeatability and quality are improved over conventional (job shop) machines. Workholding devices can be made more universal, and setup time can be reduced, along with tool-change time, thus making programmable machines economical for producing small lots or even a single piece. When combined with the managerial and organizational strategies of group technology (GT) and cellular manufacturing, programmable machines lead to tremendous improvements in quality and productivity. GT basically leads to the creation of families of parts made in machining cells containing flexible, programmable machines. The compatibility of the components (similarly in process and sequences of processes) greatly enhances the productivity (utility) of the programmable equipment.

A side result has been the decrease in the non-chip-producing time of machine tools. The operator was relieved of the jobs of changing speeds and feeds and locating

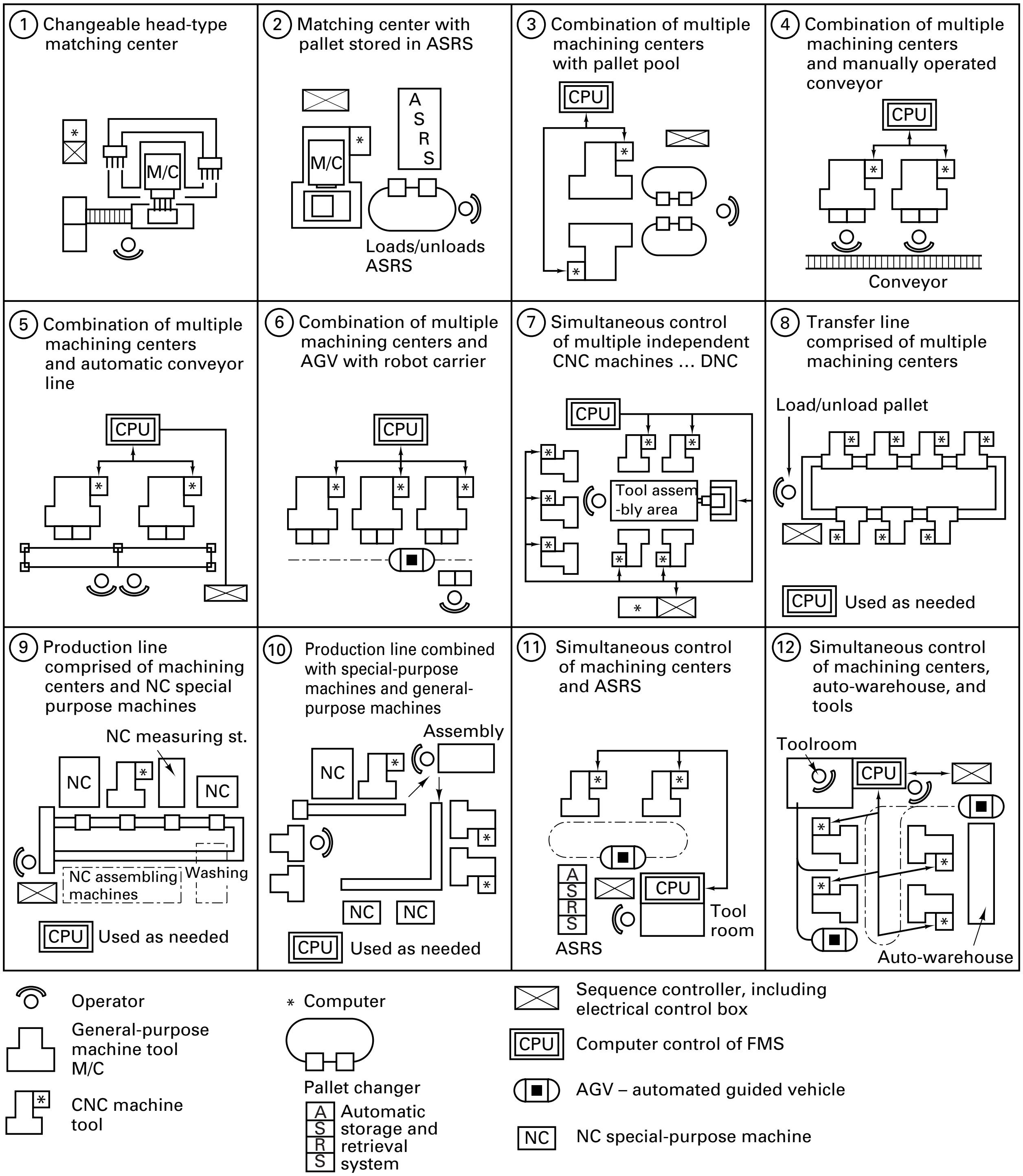

FIGURE 26-6 Examples of machining centers—FMC and FMS designs.

the tool relative to the work. Even simple forms of NC and digital readout equipment have provided both greater productivity and increased accuracy. Most early NC machine tools were developed for special types of work where accuracies of as much as 0.00005 in. were required, and many NC machines are built to provide accuracies of at least 0.0001 in., regardless of whether or not it is needed. This forced many machine tool builders to redesign their machines and improve their quality because the operator was not available to compensate for the machine (positioning) error. While most NC machine tools today will provide greater accuracy than is required for most jobs, the trend is toward greater accuracy and precision (i.e., better quality) but at no increase in cost.

Therefore, NC machines will continue to be the very backbone of the machine tool business. Hopefully, all builders will one day arrive at a common language, so that if one can program one machine, one can program them all.

As the name implies, *numerical control* is a method of controlling the motion of machine components by means of numbers or coded instructions. Assume that three 1-in. holes in the part shown in Figure 26-7 are to be drilled and bored on a vertical-spindle machine. The centers of these holes must be located relative to each other and with respect to the left-hand edge (X direction) and the bottom edge (Y direction) of the workpiece. The depth of the hole will be controlled by the Z- (or W-) axis. For this part, this is the zero reference point for the part.

The holes will be produced by center drilling, hole drilling, boring, reaming, and counterboring (five tool changes). If this were done conventionally or in manned cells, three or four different machines might be required. On the NC machining center, it only requires changing the tool automatically. The movements of the table are controlled by coordinate systems for each direction. The machine tool has a zero point. The accurate positioning of the cutting tool with respect to the work is established by these zero points. The center of the table or a point along the edge of the traverse range is commonly used. The workpiece is positioned on the table with respect to this zero point on the table. For our example, the lower left-hand corner of the part is placed on the table 12 in. in the $X+$ direction, 4 in. in the $Y+$ direction, and 2 in. in the $Z+$ direction with respect to the machine zero point.

A software program is written that instructs the table to move with respect to the axis of the spindle to bring the holes to the correct location for machining. The machine shown in Figure 26-7 is called a five-axis machine because it has five movements (shown by the dark arrows) under numerical control. No fixture is shown in this example, but one would typically be used to obtain quick and repeatable location of the part on the table.

HOW CNC MACHINES WORK

NC and CNC machines can be subdivided into two types, shown in Figure 26-8. In *point-to-point machines,* the tool path is not controlled but tools can be moved in straight lines or parallel traverses at desired table feed rates, but only one axis drive is operated at a time. *Contouring* permits two or three axes to be controlled simultaneously, permitting two- or three-dimensional geometries to be generated. Another term for contouring is *continuous path*. Most milling and turning machining centers have contouring capability and are closed loop. The point-to-point machines can be open loop rather than closed loop.

The X-axis of the three-axis vertical spindle CNC machine tool shown in Figure 26-7 will be used to explain how the closed-loop positional control works.

Controlling a machine tool using variable input, such as a punched tape or a stored program, is known as numerical control and is defined by the Electronic Industries Association (EIA) as “a system in which actions are controlled by direct insertion of a numerical data at some point (the measured data is call the parts program). The system must automatically interpret at least some portion of the data.”

Traditionally, NC machine tool has a *machine control unit* (MCU). The MCU is further divided into two elements: the data-processing unit (DPU) and the control-loops unit (CLU). The DPU processes the coded data that are read from the tape or some other input medium that it gives to the CPU, specifically the position of each axis, its direction of motion feed, and its auxiliary-function control signals. The CLU operates the drive mechanisms of the machine.

The CNC control system, shown schematically in Figure 26-9, uses a resolver or encoder to provide axis-position feedback to the MCU. A closed-loop control requires a transducer or sensing device to detect machine table position (and velocity for contouring) and transmit that information back to the MCU to compare the current status with the desired state. If they are different, the control unit produces a signal to the drive motors to move the table, reducing the error signal and ultimately moving the table to the desired position at the desired velocity. At this point, the command counter reaches zero, meaning that the correct number of pulses has been sent to move the table to the desired position. In a closed-loop system, a comparator is used to compare

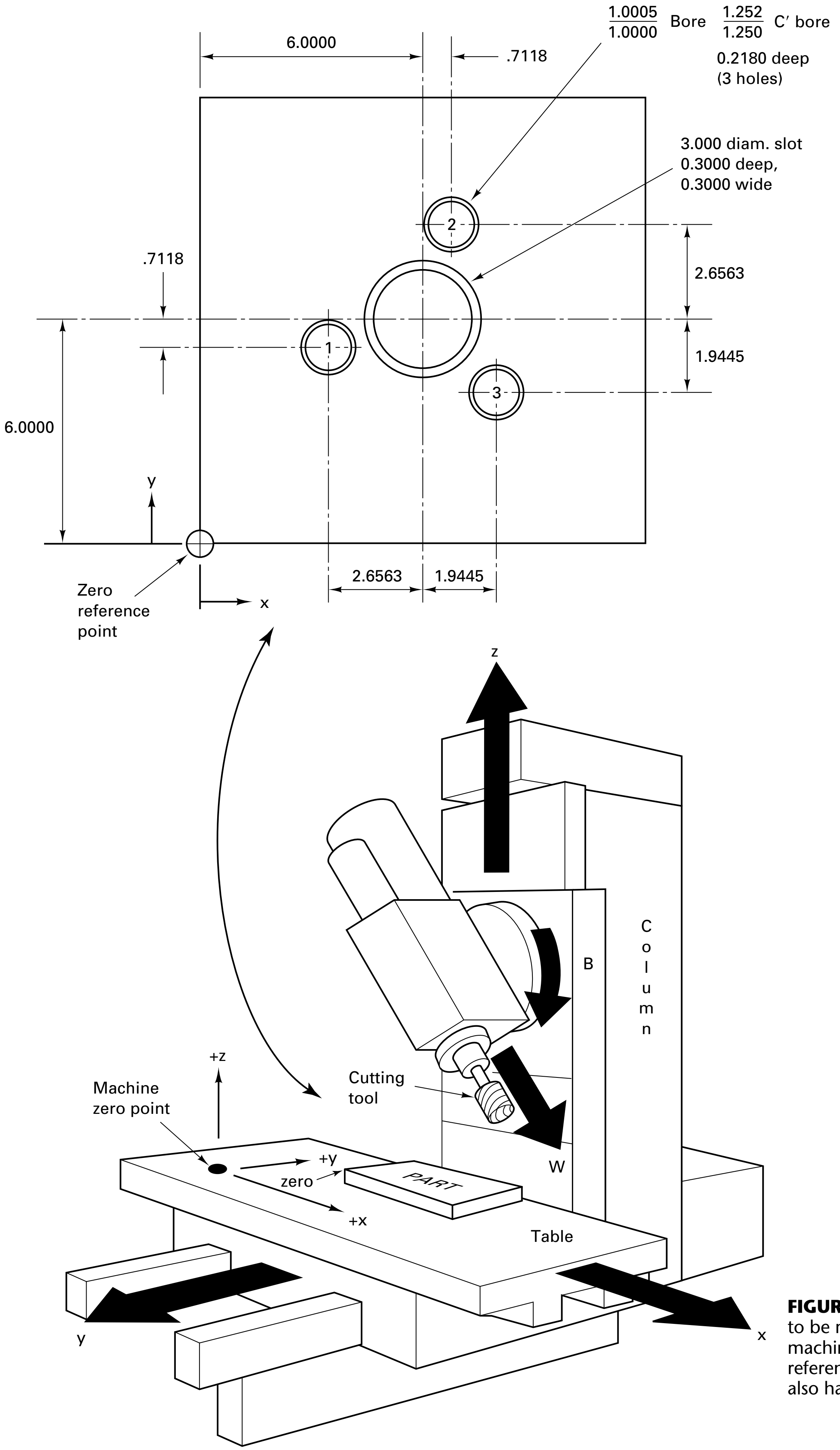

FIGURE 26-7 The part (above) to be machined on the NC machine (below) has a zero reference point. The machine also has a zero reference point.

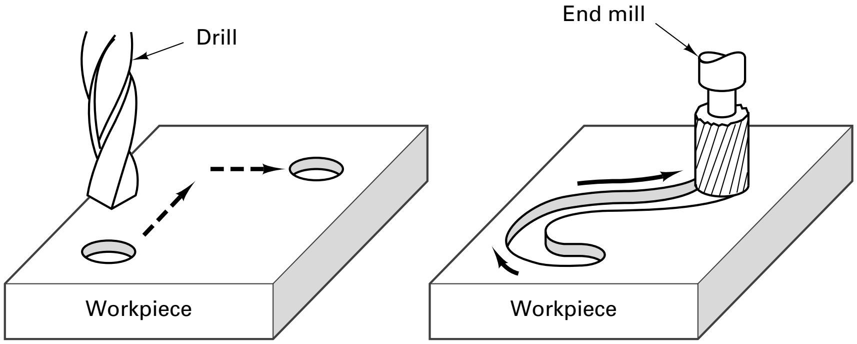

Point-to-point control (milling machines, welding)

Contouring control (machining centers)

FIGURE 26-8 NC and CNC systems are subdivided into two basic categories: point-to-point controls or contouring controls.

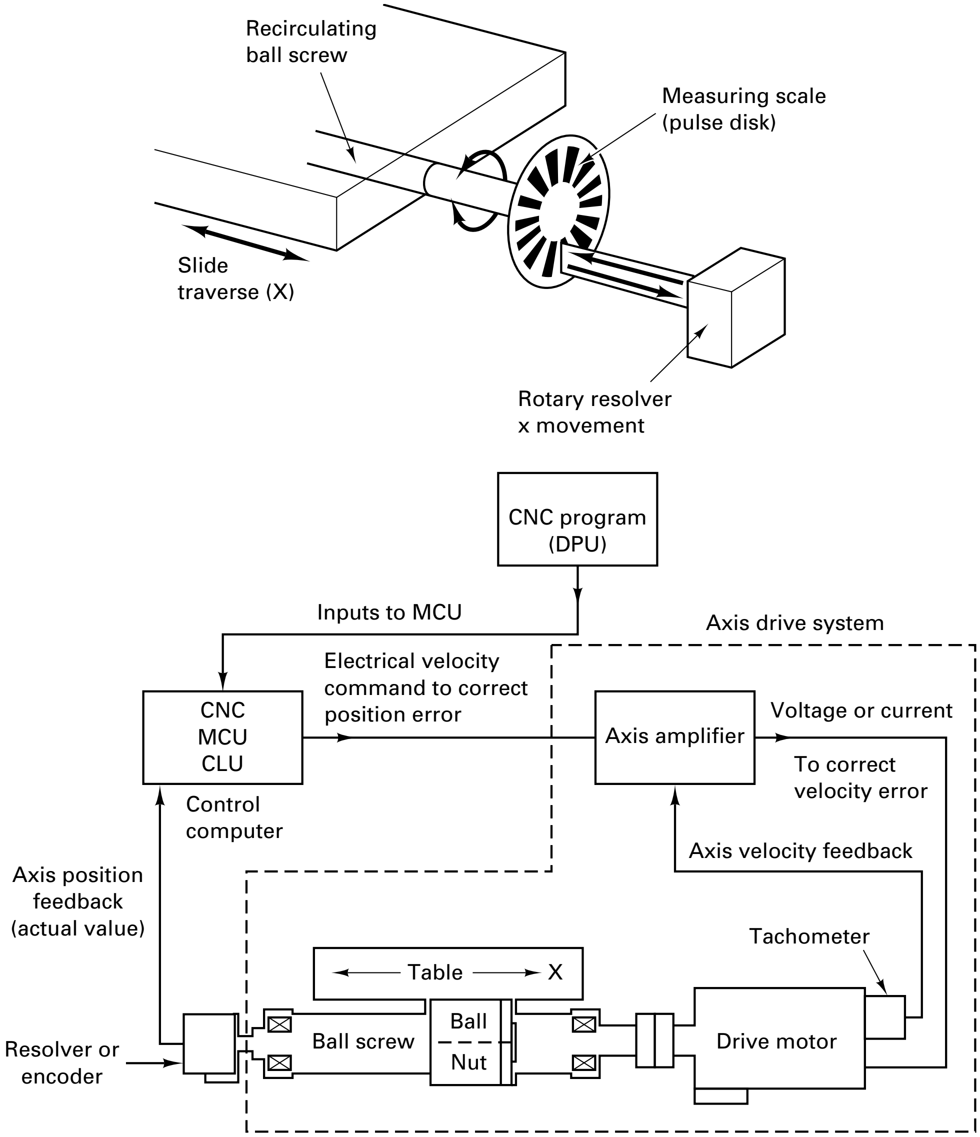

FIGURE 26-9 The table of the CNC machine (above) is translated with a ball screw mechanism, and its location is detected with a resolver. The schematic below shows how the table is located with respect to the spindle axis of the machine tool.

feedback pulses with the original value, generating an error signal. Thus, when the machine control unit receives a signal to execute this command, the table is moved to the specified location, with the actual position being monitored by the feedback transducer. Table motion ceases when the error signal has been reduced to zero and the function (drilling a hole) takes place. Closed-loop systems tend to have greater accuracy and respond faster to input signals but may exhibit stability problems (oscillating about a desired value instead of achieving it) not found in open-loop machines.

For most NC controls, the feedback signals are supplied by transducers actuated either by the feed screw or by the actual movement of the component. The transducers may provide either *digital* or *analog* information (signals). The resolver in Figure 26-9 measures (indirectly) the movement of the table by the rotation of the ball screw. A pulse disk on the end of the ball screw converts analog movement back into digital pulses, which are used to calculate table movement. The tachometer on the drive motor measures the table velocity.

Two basic types of digital transducers are used. One supplies *incremental* information and tells how much motion of the input shaft or table has occurred since the last time. The information supplied is similar to telling newspaper carriers that papers are to be delivered to the first, fourth, and eighth houses from a given corner on one side of the block. To follow the instructions, the carriers would need a means of counting the houses (pulses) as they passed them. They would deliver papers as they counted 1, 4, and 8. The second type of digital information is *absolute* in character, with each pulse corresponding to a specific location of the machine components. To continue the carrier analogy, this would correspond to telling the carriers to deliver papers to the houses having house numbers 2400, 2406, and 2414. In this case it would only be necessary for the carriers (machine component) to be able to read the house numbers (addresses) and stop to deliver a paper when arriving at a proper address. This *address* system is a common one in numerical control systems, because it provides absolute location information relative to a machine zero point.

When analog information is used, the signal is usually in the form of an electric voltage that varies as the input shaft is rotated or the machine component is moved, the variable output being a function of movement. The movement is evaluated by measuring, or matching, the voltage, or by measuring the ratios between the applied and feedback voltages; this eliminates the effect of supply-voltage variations.

The input information (i.e., the location of the holes) is given in binary form to the machine control unit in the form of a punched tape—a magnetic tape in a cassette on old machines or disks, as shown, on newer machines. The data are input directly via the control panel or a computer program. This command signal is converted into pulses by the machine control unit, which in turn drives the servomotor or stepper motor.

Alternating-current servomotors are rapidly replacing direct-current motors on new CNC machine tools. The reasons for change are better reliability, better performance-to-weight ratio, and lower power consumption.

If the system is point-to-point (or positioning), the control system disregards the paths between points. Some positioning systems provide for control of straight cuts along the machine axes and produce diagonal paths at 45° to the axes by maintaining one-to-one relationships between the motions of perpendicular axes. Contouring systems require directional changes at controlled velocity. Any lost motion in the system can distort the part. In contouring, it is usually necessary to control multiple paths between points by interpolating intermediate coordinate positions. As many of these systems as desired can be combined to provide control in several axes—two- and three-axis controls are most common, but some machines have as many as seven. In many, conversion to either English or metric measurement is available merely by throwing a switch.

The components required for such a numerical control system are now standardized items of hardware. In most cases the drive motor is electric, but hydraulic systems are also used. They are usually capable of moving the machine elements, such as tables, at high rates of speed, up to 200 in./min being common. Thus exact positioning can be achieved more rapidly than by manual means. The transducer can be placed on the drive motor or connected directly to the leadscrew, with special precautions being taken, such as the use of extra-large screws and ball nuts, to avoid backlash and to assure accuracy. In other systems, the encoder is attached to the machine table, providing direct measurement of the table position. Various degrees of accuracy are obtainable. Guaranteed positioning accuracies of 0.001 or 0.0001 in. are common, but greater accuracies can be obtained at higher cost. Most NC systems are built into the machines, but they can be retrofitted to some machine tools.

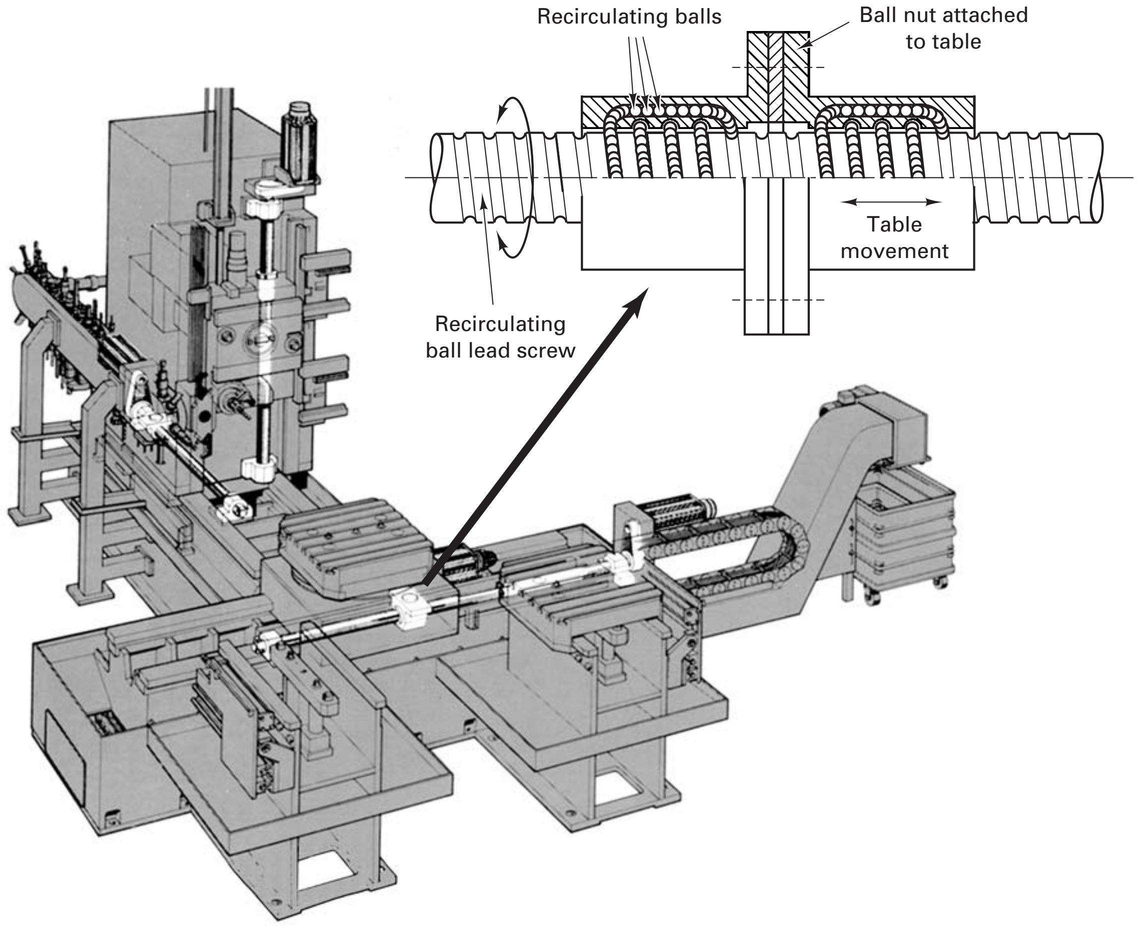

FIGURE 26-10 The ball lead screw shown in detail provides great accuracy and position to NC and CNC machine tools.

Initially, NC machines provided tool change; tool setting; and speed, feed, and depth-of-cut settings for positioning the work relative to the tool, with the remaining functions controlled by the operator. Gradually, the functions were incorporated into the control system so that the machines could change the tools automatically, change the speeds and feeds as needed for different operations, position the work relative to the tools, control the cutter path and velocity, reposition the tool rapidly between operations, and start and stop the sequence as needed.

Tables and tools are positioned using recirculating ball-screw drives (see Figure 26-10), or linear accelerators, which greatly reduce the backlash in the drive systems, helping to eliminate problems of servoloop oscillation and machine instability. Using such hardware, NC machines are manufactured with greater accuracy and repeatability and more rapid table movements than is possible for conventional machines.

Some of the functions in programmable machines require feedforward or preset loops. The machine must know in advance the rough dimensions of a casting or a forging so that it can determine how many roughing cuts are needed prior to the finishing cut. However, for most CNC work, the operator (or part programmer) still plans the sequence of operations; selects the cutting tools and workholding devices; and selects the speeds, feeds, and depths of cut. Common machining routines such as pocket milling or peck drilling have been programmed into many CNC machines. These are called *canned cycles*. As shown in Figure 26-11, the operator merely supplies the information requested by the control menu, and the machine fills in the necessary data for the previously written program to perform the desired machining routines.

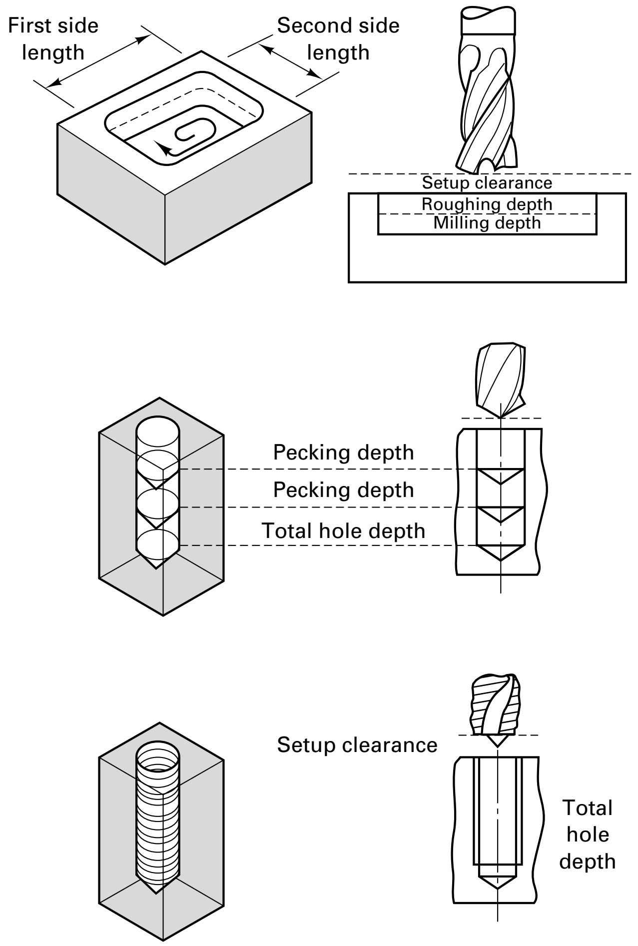

Rectangular pocket milling
Control menu asks for:
- Setup clearance
- Milling depth
- Roughing depth
- Feed rate for roughing
- First side length
- Second side length
- Feed rate
- Direction or rotation

Peck drilling
Control menu asks for:
- Setup clearance
- Total hole depth
- Pecking depth
- Dwell time (seconds)
- Feed rate

Tapping
Control menu asks for:
- Setup clearance
- Total hole depth
- Dwell time (seconds)
- Feed rate

FIGURE 26-11 Canned or preprogrammed machining routines greatly simplify programming CNC machines. *(Courtesy of Heidenkain Corporation, Elk Grove Village, ILL.)*

Source: Heidenhain Corp. (Elk Grove Village, IL.)

To ensure accurate machining of a workpiece on a CNC machine, the control system has to *know* certain dimensions of the tools. These *tool dimensions* are referenced to a fixed *setting point* on the tool holder. For the milling cutter, the dimensions are length *L* and cutter radius. For the turning tool, the dimensions are length *L* and transverse overhang. These dimensions are part of the information given to the operator on the setting sheet (see Figure 26-12). The program assumes that the tools will have the specified dimensions.

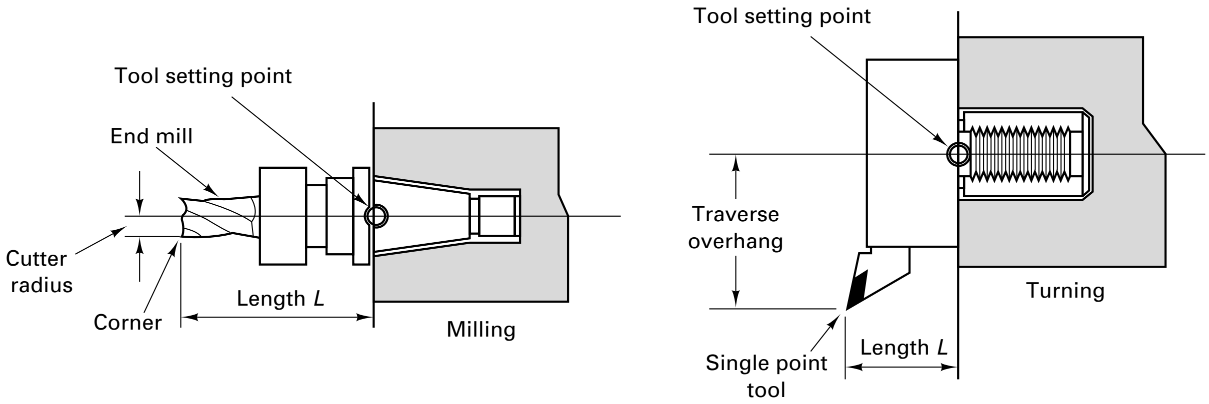

FIGURE 26-12 The location of the corner of the end mill (left) or the tip of a single-point tool (right) must be known with respect to the tool setting points so that tool dimensions are accurately set.

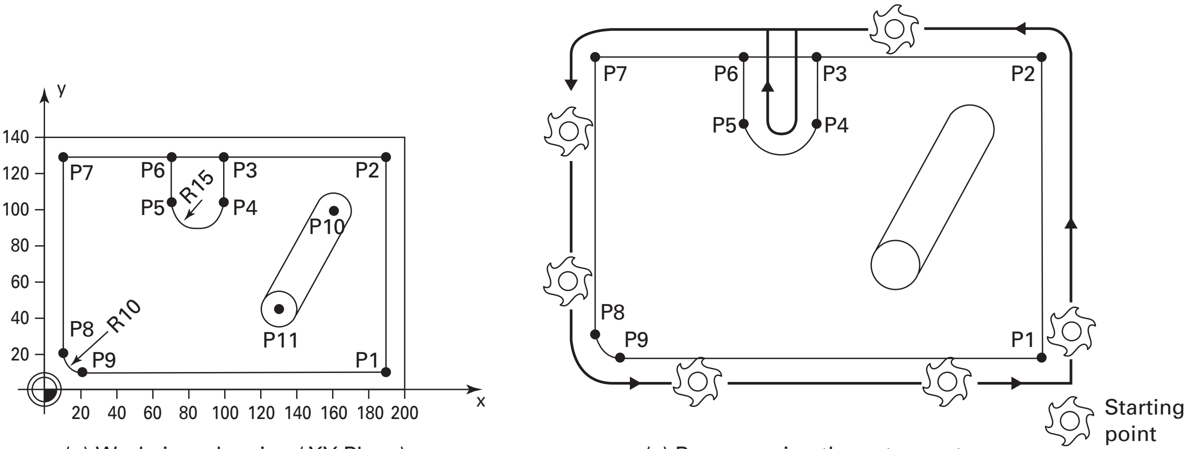

(a) Workpiece drawing (*XY*-Plane)

(c) Programming the outer contour

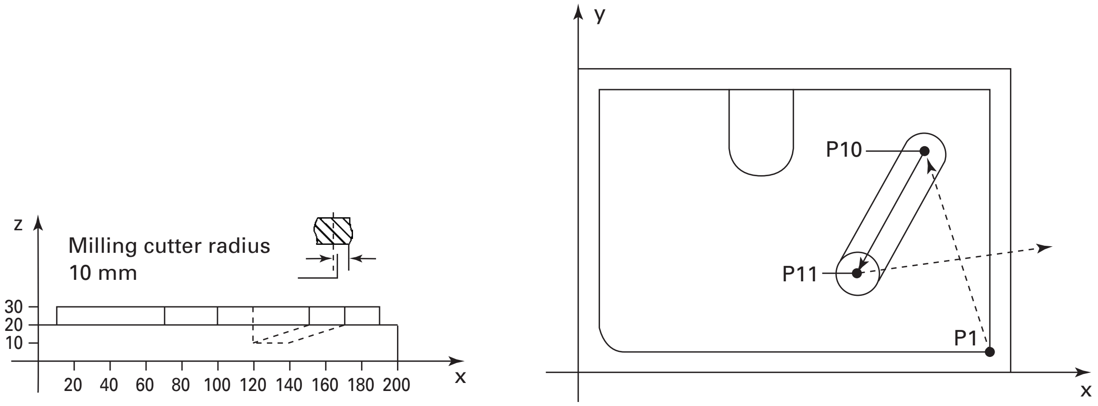

(b) Workpiece drawing (*XZ*-Plane)

(d) Programming the slot

FIGURE 26-13 Example of programming a part in a vertical-spindle NC machine.

PART PROGRAMMING

Obviously, the preparation of the control program for use in NC machines is a critical step. Many standard languages and programs have been developed by the machine tool builders, and only the very basic aspect can be presented here.

The basic steps can be illustrated by reference to the part shown in Figure 26-13. The first step is to modify the drawing received from design engineering to establish the zero reference axes: the *X* and *Y* directions. The zero reference point is the lower left-hand corner of the part. The hole labeled 1 is located +3.3437 in the *X* direction and ±5.2882 in the *Y* direction, with respect to its zero point. The part should be dimensioned with respect to its zero reference point. This may require redrawing and redimensioning the part. Obviously, this step can be avoided if the original drawing is made in the desired form or a CAD design is used. The setup instructions given to the operator establish the position of the workpiece properly on the machine table with respect to the axis of the spindle or the machine zero reference point.

The second step is to develop a *part program*. The program (1) defines the sequence of operations required to fabricate the part; (2) gives the *x*, *y*, and *z* coordinate positions of the operations; and (3) specifies the spindle traverse that determines the depth of the cut, the spindle speed, and the feed rate, and also determines whether the same tool can continue the next operation or whether a tool change is required. The last four items are specified by code symbols, or NC words (see Table 26-2). The NC words are put together in a specified order to define a *block* of information needed to execute an operation. By convention, the data are usually arranged in blocks in the sequential order shown in the table.

Before starting with programming tool movements, the table movements and the workpiece drawing are studied. As a first step, the workpiece zero point is established. The workpiece drawing, two views, is redone into a coordinate system. In Figure 26-8 the workpiece zero point is located at the bottom left-hand corner of the workpiece drawing.

The three axes of the machine coordinate system is established in relation to the workpiece as follows:

- The *x*- and *y*-axes are used to show the workpiece geometry in the *XY*-plane.
- The *z*-axis shows the down feed or depth.

All the coordinates of the most important points on the part (in this case the points P1–P11) have been collated in the form of a table:

	P1	P2	P3	P4	P5	P6	P7	P8	P9	P10	P11
x	190	190	100	100	70	70	10	10	20	160	130
y	10	130	130	105	105	130	130	20	10	100	45
z	20	20	20	20	20	20	20	20	20	20	10

Preparation of the program includes the selection of the cutting tools (a 10-mm-diameter end mill) and the selection of desired cutting speeds and feed per tooth. As discussed in Chapter 25, these parameters, along with the depth of cut and depth of immersion, determine the spindle rpm and table feed rates.

For determining the outer contour, the tool radius must be considered because the path of the milling cutting along the outer contour is input into the control program, not the actual perimeter of the parts. To ensure that the control system can in fact control the milling cutter center axis correctly, the size of the milling cutter (radius or diameter) has to be known beforehand, as does the side of the finished contour (relative to the machining direction) on which the milling cutter is located. How these two items of information are input is not standardized for all machine tools, and it is therefore assumed here that the control system has already received this information.

Machining the outer contour begins with the milling cutter moving at rapid traverse rate—that is, function G00 X190 Y-5 to the starting point adjacent to the workpiece—whereupon down feed takes place with function G00 Z20 after switching on the spindle rotation.

Machining of the outer contour is then accomplished with the following G functions: The supplementary function F produces the necessary feed rate in mm/min. The down feed depth is taken up by the milling cutter at the starting point.

G01	Y130	F200			Straight line from starting point to P2
G01	X100				Straight line from P2 to P3
G01	X105	F150			Straight line from P3 to P4
G02	X70	Y105	R15		Radial arc, clockwise, with 15 radius
G01	Y130	F200			Straight line from P5 to P6
G01	X10				Straight line from P6 to P7
G01	Y20				Straight line from P7 to P8
G03	X20	Y10	R10	F150	Radial arc, counterclockwise with 10 radius
G01	X190	F200			Straight line from P9 to P1

TABLE 26-2 Definitions of Common NC Words

NC Word	Use
N	*Sequence number:* identifies the block of information
G	*Preparatory function:* requests different control functions, including preprogrammed machining routines
X, Y, Z, B	*Dimensional coordinate data:* linear and angular motion commands for the axis of the machine
F	*Feed function:* sets feed rate for this operation
S	*Speed function:* sets cutting speed for this operation
T	*Tool function:* tells the machine the location of the tool in the tool holder or tool turret
M	*Miscellaneous function:* turns coolant on or off, opens spindle, reverses spindle, tool change, etc.
EOB	*End of block:* indicates to the MCU that a full block of information has been transmitted and the block can be executed

For milling the slot, the milling cutter is first retracted by G01 Z35 from the workpiece to point P1 shown in Figure 26-13d.

Because the width of the slot is equal to the cutter diameter, the path of the cutter is easy to program. The tool radius compensation feature is switches off (by G40) so the following traverse instructions refer to the cutter center line axis.

Milling of the slot is accomplished by the following instructions:

G00	X160	X100		Rapid traverse to point P10
G01	Z20	F150		Down feed at point P10
G01	X130	Y45	Z10	Straight line from P10 to P11
G01	Z35	F200		Retraction from workpiece
G00	X300	Y300		Rapid traverse away from workpiece

After the program has been written, it is *verified*, which means the steps in making the part are graphically simulated. The verification step can use the computer monitor, which simulates the part being made by tracing all the toolwork paths as they would occur on the machine tool. Sometimes a sample part is machined in plastic or machinable wax for checking the part specifications from the drawing against the real part.

The program can be directly entered into the control panel of a CNC machine. Usually, longer programs are entered by tape or disk and short programs are entered manually. The inputs may be in binary code (in older machines) or in arabic numbers with verbal commands that the machine understands.

Historically, punched tape was used to control the movements. The idea came from the old player-piano roll, which was a form of tape control, and punched cards had been used for many years for controlling complicated weaving and business machines. Thus tape control of machine tools was an extension of an existing basic concept in which holes, representing information that has been punched into the tape, are read by sensing devices and used to actuate the devices that control various electrical or mechanical mechanisms.

Over the years, four basic types of tape format have been used for NC input to communicate dimensional and nondimensional information: *fixed-sequential format, block-address format, tab-sequential format,* and *word-address* format. Most new NC or CNC systems use the word-address format, which allows the words to be presented in any order and is the most flexible.

Today, CNC machines permit the user to program the interface between the machine tool and the control, greatly reducing the number of machining system components and interconnections. Current CNCs have extensive self-diagnostics and performance-monitoring systems. The greatest advances in CNC technology, however, are in part programming, where easy-to-use, menu-driven software makes programming almost as simple as setting up the machine manually. With older NC machines, the operator could override the program when necessary but could not reprogram the machine unless a new program was written. The CNC machine has the capability of reading a program into its computer memory, and the program can be modified at the machine like any other computer program.

On CNC machines, the machine tool operator may perform all the programming steps right at the console of the machine, programming the processing steps for the part directly into the computer memory. The program can be saved by having the machine print out a copy of the program, which can be used later for reorders of the same part. Features such as program edit, canned routines, program storage, diagnostics, constant surface speed, and tape punch are common on today's CNC machines.

As more and more design work is done on the computer (CAD) using databases and software that are compatible to the machine tools, there will be less dependence on tape for program storage and more utilization of floppy disks, hard disks, and other typical computer storage means. For example, a machining cell composed of NC machine tools designed for a family of 10 component parts is able to make the 10 different parts without needing retooling or refixturing, but it will still have 10 different programs for these parts for each machine. If the programs are stored in the computer, they can be readily accessed, but if they are stored on disk, delays will occur in dumping the different programs into or out of the control computer.

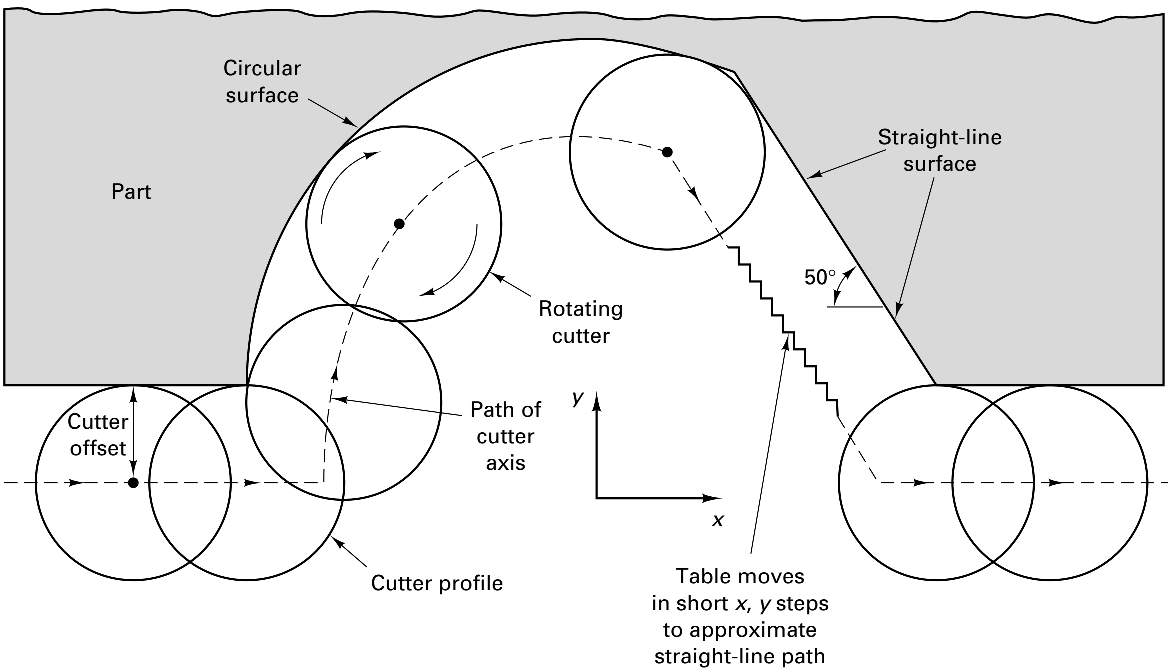

FIGURE 26-14 Two classic problems in NC programming are the determination of cutter offset and interpolation of cutter parts.

Cutter Offset and Interpolation in Numerical Control. Although the majority of NC and tape-controlled machine tools do not provide for machining contoured surfaces, most CNC and DNC machines do. The required curves and contours are generated approximately by a series of very short straight lines or segments of some type of regular curves, such as hyperbolas. This is called *interpolation*. The program fed to the machine is arranged to approximate the required curve within the desired accuracy. Figure 26-14 illustrates how a desired straight-line or curved surface can be approximated by means of short segments. Interpolation refers to the fact that curved surfaces as generated by machine tools must be approximated by a series of very short, straight-line movements in the x,y, and z directions. The length of the segment must be varied in accordance with the deviation permitted. Most NC machine tools with contouring capability will produce a surface that is within 0.001 in. of the one desired, and many will provide considerably better performance. Most contouring machines have either two- or three-axis capability, but five-axis capability as shown in Figures 26-7 and 26-15 are readily available.

In milling machines, the centerline of the cutter is offset from the desired surface by the radius of the cutter. The path that the cutter needs to take to generate the desired geometry is not simply the perimeter or profile of the part. Thus cutter offset programs must be included in the software. Obviously, contour machining (with cutter offset and interpolation) requires that complex information be entered into the computer because the number of straight-line or curved segments may be quite large. Manual programming of the tape can be quite laborious. Computer programming can translate simple commands into the complex information required by the machine.

■ 26.3 MACHINING CENTER FEATURES AND TRENDS

Computer numerical control is used on a wide variety of machine tools. These range from single-spindle drilling machines, which often have only two-axis control and can be obtained for about \$10,000, to machining centers, such as shown in Figure 26-15. The machining center can do drilling, boring, milling, tapping, and so on, with four- or five-axis control. It can automatically select and change 40 to 180 preset tools. The table can move left/right and in/out, and the spindle can move up/down and in/out, with positioning accuracy in the range 0.00012 in. with repeatability to ±.00004 in. over 40 in. of travel.

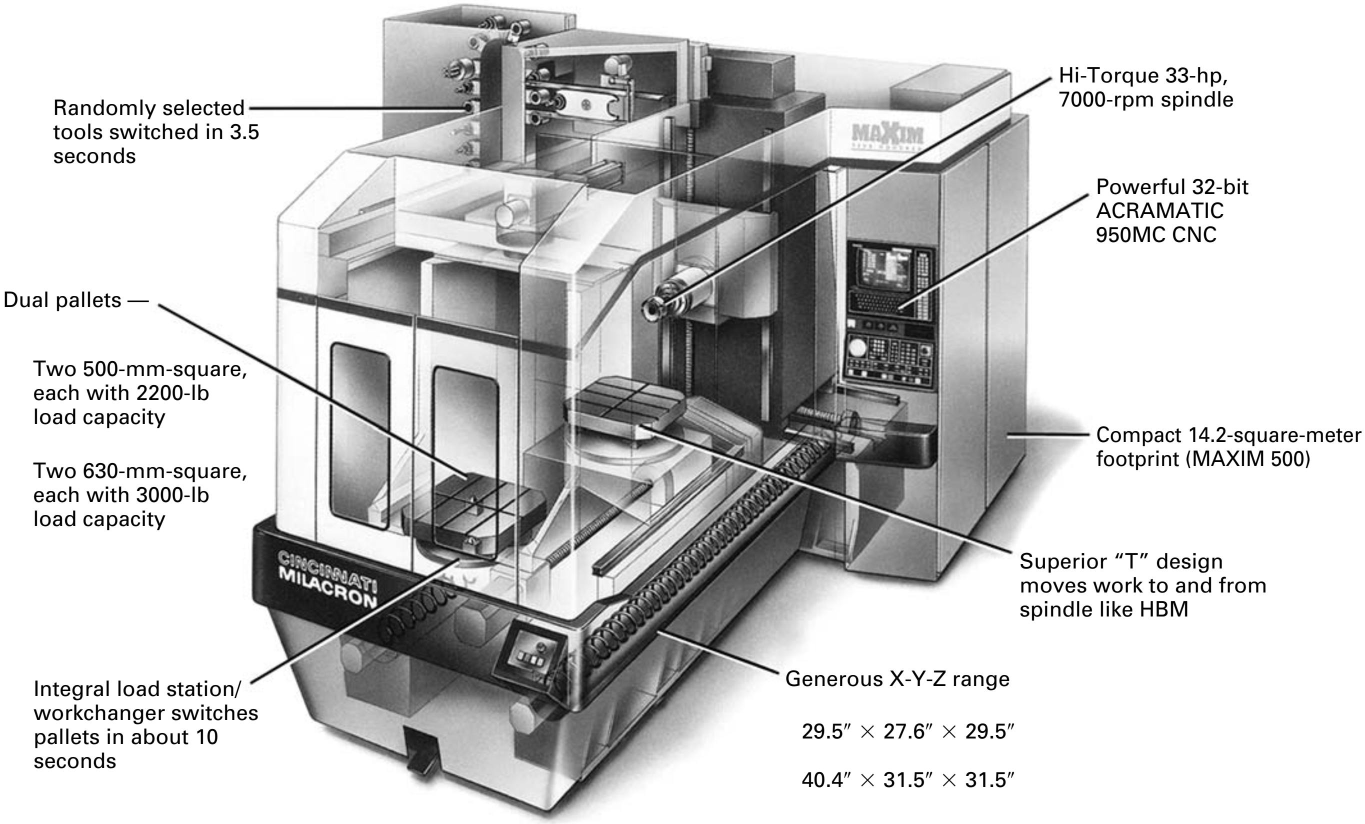

FIGURE 26-15 Modern machining centers will typically have horizontal spindles with rpms up to 15,000, dual pallets, and cutting-tool magazines holding 40 to 100 tools.

Beyond accuracy and repeatability and the number of controlled axes, CNC machines are also categorized by spindle speed, horsepower, and the size of the workpiece. The accuracy and repeatability (precision) result from a combination of factors including the resolution of the control instrumentation and the accuracy of the hardware. The control resolution is the minimum length distinguishable by the control unit. It is called the base length unit (BLU) and is mainly a factor of the axis transducer and the quality of the leadscrew or linear translator. There are many sources of error in a machine, including wear in the machine sliding elements, machine tool assembly errors, spindle runout (wear), and leadscrew backlash.

Tool deflection due to the cutting forces produces dimensional error and chatter marks. Thermal error, caused by the thermal expansion of machine elements, is not uniform and is normally the greatest source of machine error. Methods used to remove heat from a machine include cutting fluids, locating drive motors away from the center of a machine, reducing friction from the ways and bearings, and spray cooling control element of the machine.

Most modern machining centers have automatic tool-change and automatic work-transfer capability, so that workpieces can be loaded and unloaded while machining is in process. Such a machine can cost over $200,000. Between these extremes are numerous machine tools that do less varied work than the highly sophisticated machining centers but that combine high output and minimum setup time with remarkable flexibility (large number of tool motions provided).

CNC TURNING CENTERS

The modern lathe has CNC control and tools mounted in turrets on slanted beds. The tailstock has been replaced by a live, powered spindle and chuck. On some lathes the concept of automatic tool changing has been implemented. The tools are held on a rotating tool magazine, and a gantry-type tool changer is used to change the tools. Each magazine

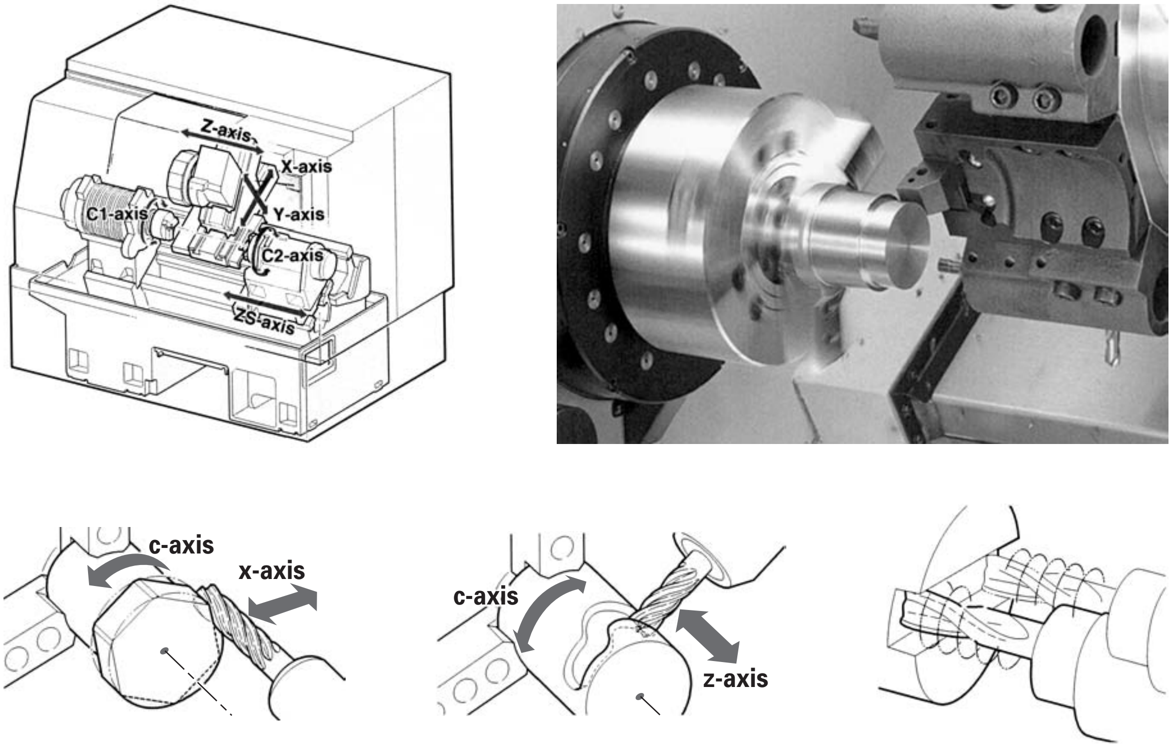

FIGURE 26-16 This CNC turning center has a multiple-axis capability with two spindles and a 12-tool turret with X, Y, and Z control as well as axis control of the spindles.

holds one type of cutting tool. This is an example of the trend of providing greater versatility along with high productivity in lathes. The versatility is being further increased by combining both rotary-work and rotary-tool operations—turning and milling in a single machine. Live, powered, or driven tools replace regular tools in the turrets and perform milling and drilling operations when the spindle is stopped. See Figure 26-16.

OTHER NC MACHINES

Numerical control has been applied to a wide variety of other production processes. NC turret punches with X-Y control on the table, CNC wire EDM machines, laser and water-jet abrasive machining, flame cutters, and many other machines are readily available. Some new trends are being observed in the development of machining centers, such as smaller, compact machining centers with higher spindle speeds. Machines with four- and five-axis capability are readily available. Modern machining centers have contributed significantly to improved productivity in many companies. They have eliminated the time lost in moving workpieces from machine to machine and the time needed for workpiece loading and unloading for separate operations. In addition, they have minimized the time lost in changing tools, carrying out gaging operations, and aligning workpieces on the machine.

The latest generation of machining centers is aimed at further improving utilization by reducing the time when machines are stopped, either during pauses in a shift or between shifts. Delays are caused by tool breakage, unforeseen tool wear, a limited number of tools, or an inadequate number of available workpieces. Machines are fitted with tool breakage monitors, tool wear compensating devices, and means for increasing the number of tools and workpieces available.

Probes on CNC machines can greatly improve the process capability of the machine tool. There is a big difference between the claimed program resolution for an NC machine and the accuracy and precision (the process capability) of the actual parts. As shown in Figure 26-17, true positioning accuracy and precision are affected by machine alignment, machine and fixture setup, variations in the workholding device, raw material variations, workpiece location in the fixture variations, and cutting-tool tolerances.

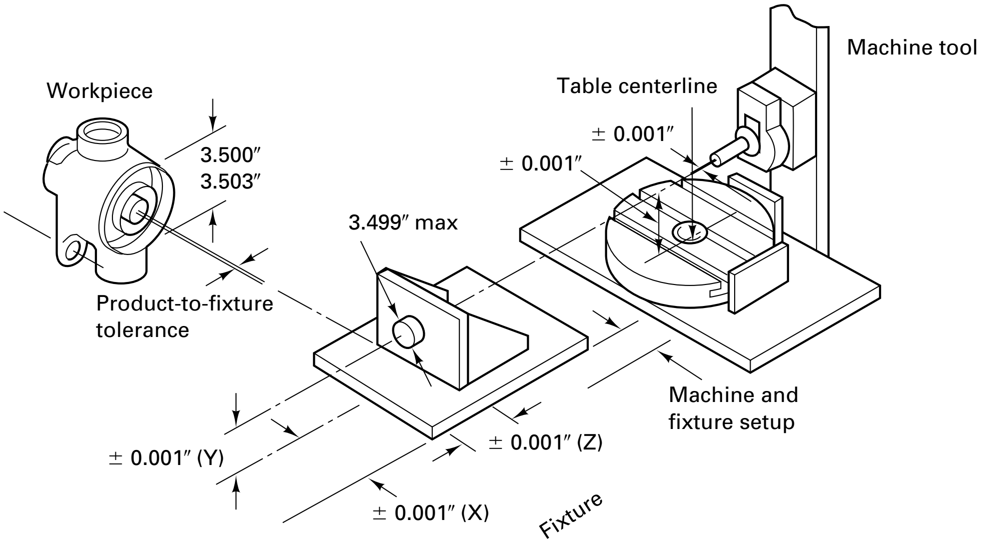

FIGURE 26-17 Process capability in NC machines is affected by many factors.

Thus the finished workpiece may be unacceptable even though the machine is more than capable of producing the part to the design specifications. The part program has no assurance that the part is properly located in the fixture or that the fixture is properly located on the table of the machine. However, a probe, carried in the tool storage magazine and mounted when needed in the spindle like a cutting tool, can establish the location of the surface features relative to each other and to the spindle axis within 0.0005 in. (Figure 26-18). The machine controller, using the probe data, will then shift the program reference data accordingly. The probe can be used to determine the amount of material on a rough casting, locate a corner of a part, define the center of a hole, or check for the presence or absence of a feature. All of the variability described in Figure 26-17 can be compensated for except for variations in the cutting-tool geometry or tool wear. A probe mounted on the machine tool can be used to automatically update tool-offset data in the control computer. Thus the machine tool can function as a coordinate measuring machine. By comparing the actual touched location with the programmed location, the measuring routine determines appropriate compensation.

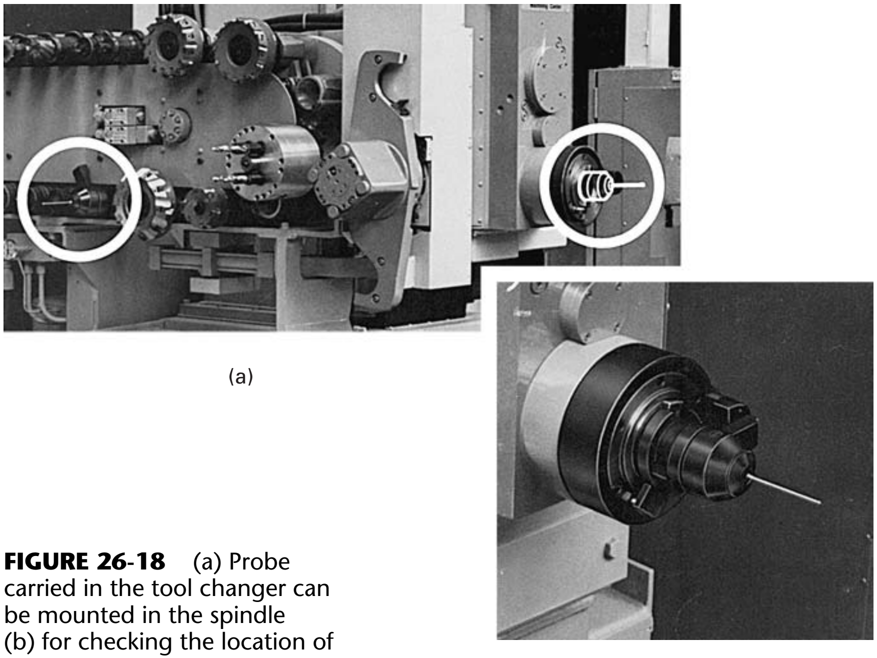
(a)

(b)

FIGURE 26-18 (a) Probe carried in the tool changer can be mounted in the spindle (b) for checking the location of part features accurately.

Many of the new machining centers are equipped with novel automatic pallet changers and workpiece loading and unloading devices. Robots are increasingly being applied for workpiece handling in machine groups, including manufacturing cells. In some cases the robot is also used for tool-changing functions.

26.4 ULTRA-HIGH-SPEED MACHINING CENTERS (UHSMCS)

Anyone involved in the product development process knows that the longest lead-time path from a new product (like a car) design to a finished product coming off the final assembly line always includes the die-making process. For example, in the automotive industry, each new car design may have many die sets for forged and sheet metal parts. Machining of the dies is a key process in the conventional die-making process (see Figure 26-19), where the major steps are milling, electronic discharge machining (EDM), polishing, die assembly, tryout, and modification.

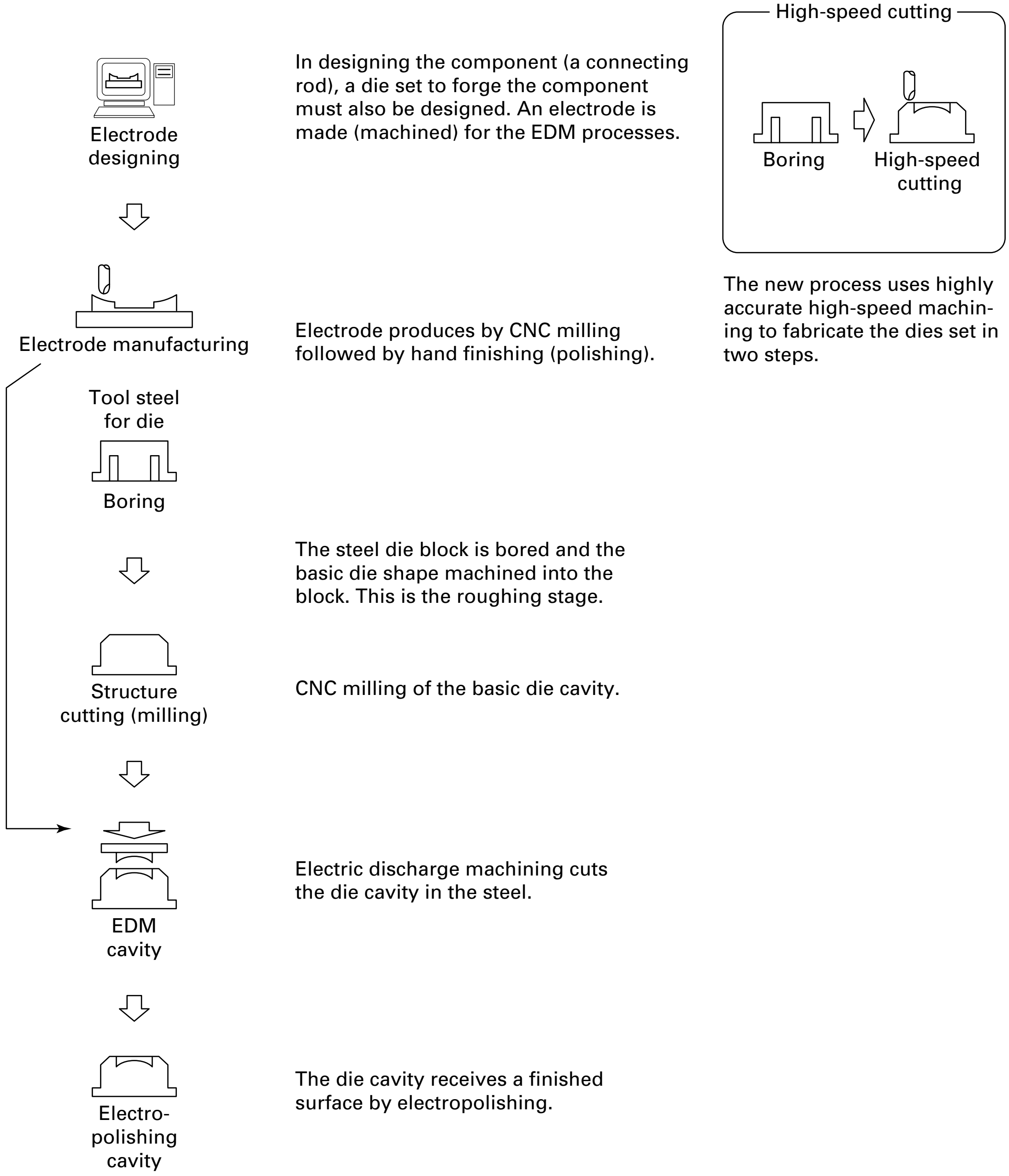

In designing the component (a connecting rod), a die set to forge the component must also be designed. An electrode is made (machined) for the EDM processes.

Electrode produces by CNC milling followed by hand finishing (polishing).

The steel die block is bored and the basic die shape machined into the block. This is the roughing stage.

CNC milling of the basic die cavity.

Electric discharge machining cuts the die cavity in the steel.

The die cavity receives a finished surface by electropolishing.

The new process uses highly accurate high-speed machining to fabricate the dies set in two steps.

FIGURE 26-19 The process to manufacture dies for forging processes is shown on the left. Using ultra-high-speed machining centers reduces the sequence to two steps.

Ultra-high-speed machining centers (UHSMCs) are available to shorten the die-making process lead time. The new machining centers have highly accurate high-speed spindles capable of rpms of 30,000 to 50,000, cutting feed rates of 60 m/min, and cutting feed accelerations of 9.8 m/sec^2. The machine requires a spindle with high stiffness utilizing ceramic ball bearings with a constant-pressure preload mechanism and jet lubrication for superior performance.

Robust machining centers of this sort are capable of very high metal removal rates, particularly in materials like aluminum. However, before investing in a high-speed machining center (HSMC), many issues must be addressed. The new machine will usually require the purchase of new cutting tools and tool holders. At the higher rpms and feed rates, smaller-diameter tools are easier to balance. Tungsten carbide is the primary tool material. Make sure the insert retention mechanism is adequate in case of a failure. Other major problems will include chatter and removal of the large volume of chips.

UHSMCs require exceptionally accurate, stiff spindles using ceramic ball bearings, raising the possible rpm as compared to regular ball bearings, air bearings, or magnetic bearings. As shown schematically in Figure 26-20, synchronized sets of ball screws are used to feed the tool in the X and Y directions to reduce the errors caused by distortion in the frame during rapid acceleration of the tool. These machines have usually four or five axes under control and represent the pinnacle of machine tool development at this time.

26.5 SUMMARY

Numerical control machines, robots, FMSs, and computers are critical elements of the advanced manufacturing technologies available for the next decade, which is being touted as the time when computer-integrated manufacturing (CIM) will become a widespread

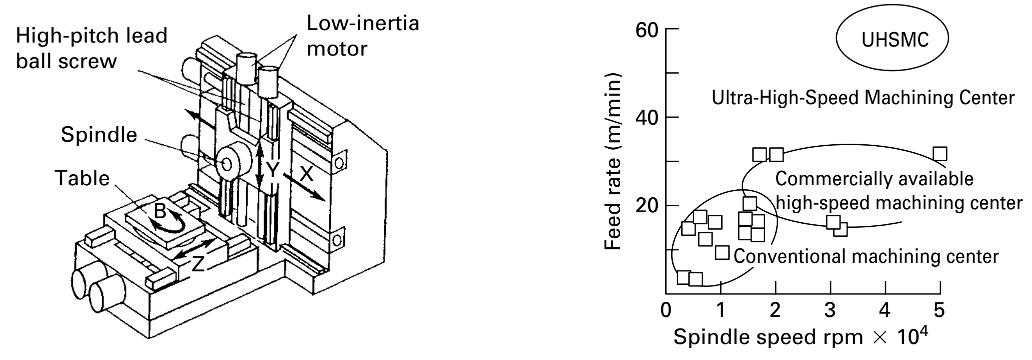

Construction of UHSMC with Horizontal Spindle

Capabilities of Machining Centers

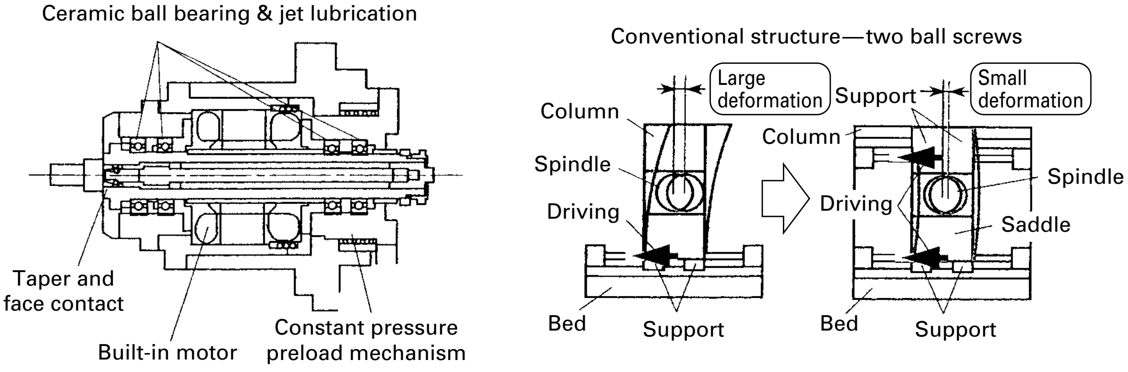

Construction of Spindle

Feed Mechanism of Conventional (x-axis) MC vs UHSMC

FIGURE 26-20 Ultra-high-speed machining centers (UHSMCs) are being developed with ceramic ball bearings in the spindles, synchronized ball screws on the X-axis to reduce distortion (due to inertia) in the moving components. *("Development of Ultra High Speed Machining Center",* Toyota Technical Review, *vol. 49, No. 1, September 1999.)*

reality. Computer technology abounds: computer-aided design; computer-aided manufacturing with NC, CNC, or A/C and DNC; computer-aided process planning; computer-aided testing and inspection (CATI); artificial intelligence; smart robots; and much more. But a word of caution: Any company can buy computers, robots, and other pieces of automation hardware and software. The secret to manufacturing success lies in the design of a simple, unique manufacturing system that can achieve superior quality at low cost with on-time delivery and still be flexible. Flexibility means the system can readily adapt to changes in the customer demand (both volume and mix) while quickly implementing design changes. This requires a visionary management team and a change in culture at all levels, starting on factory floor with an empowered and involved workforce. Changing how people work in a manufacturing system means you have to redesign the system. No better example of this can be found than the Toyota Motor Company. Led by their vice president for manufacturing, Taiichi Ohno, who conceived, developed, and implemented Toyota's unique manufacturing system, this company has emerged as the world leader in car production. The implementation of this system has saved many companies (Harley Davidson, for example) and carried many others to the top position in their industry. The Toyota system is unique and as revolutionary today as were the American Armory System (job shops) and the Ford system (flow shops) in their day. It is significant that virtually every manufacturing system or technology cited in this chapter is practiced at Toyota. This new system is now being called *lean production* (to contrast it to mass production). Toyota does not use the word *CIM* because the computer is only a tool used in their system, a manufacturing system design that recognizes people as the most flexible element (Black and Hunter, 2003). Students of industrial, mechanical and manufacturing engineering are well advised to be knowledgeable of this new unique system.

■ Key Words

automated guided vehicle (AGV)
automation
canned cycles
closed-loop control
computer numerical control (CNC)
contouring
controller
direct numerical control (DNC)
distributed numerical control (DNC)
feedback device
feedforward
flexible manufacturing system (FMS)
machine control unit (MCU)
machining center
numerical control (NC)
open-loop control
pallet changer
part program
point-to-point machines
transfer machine
turning center
ultra-high-speed machining centers (UHSMCs)

■ Review Questions

1. What human attribute is replaced by an NC machine?
2. Give an everyday example of a household device or appliance that exhibits feedback in its control system.
3. Explain how a toaster could be made a closed-loop device.
4. The first NC machines were closed-loop control. Later some machines were open loop. What change did this require on the part of machine tool builders?
5. Can a continuous-path NC machine be open loop? Why or why not?
6. How is a machining center different from a milling machine?
7. What role did John Parsons play in the development of NC?
8. What was DNC as first practiced, and what does DNC usually mean today?
9. Many manufacturers have purchased large machining centers tied to an ASRS. Go on the Internet to find an example of an ASRS, and explain how such a system works.
10. How does feedforward differ from feedback in a process control system?
11. Why was it necessary for machine tool builders to improve the leadscrews on their machines when they made them into NC machines?
12. Explain what is meant by *interpolation* in NC programming.
13. Explain the problem of cutter offset in NC programming by making a sketch showing an end mill cutting a perimeter on a square plate.
14. Some of the functions performed by the operator in piece-part manufacturing are very difficult to automate completely. Name the functions and explain why.
15. Why do you think there are no NC shapers?
16. Why isn't manual programming used for continuous-path NC?
17. What are the three basic closed-loop feedback A(4) schemes used on CNC machines.
18. Which method for position feedback is the most accurate?
19. What is the difference between the zero reference point and the machine zero point?
20. What is an encoder?
21. What is a peck-drilling subroutine for a CNC machine?
22. What is pocket milling, and what kind of milling cutter is usually used to perform it?
23. How are probes used in CNC machines to improve process capability?
24. What are G words used for in NC?

25. Flexible manufacturing systems use CNC machines for processing and AGVs, robots, or conveyors to transport parts. So what differentiates the FMS from a transfer line?
26. What major changes are being introduced into UHSMCs?

■ Problems

1. What are the X and Y dimensions for the center position of holes 1, 2, and 3 in the part shown in Figure 26-7?
2. Configurations obtained from continuous-path machining are the result of a series of straight-line, parabolic-span or higher-order curves. The degree to which curved surfaces correspond to their design depends on how many lines or spans are used. Four equal chords in a circle describe a square (Figure 26-A). Six make a hexagon, and, as the number increases, the lines themselves come closer to a perfect circle. The number of lines needed is determined by a maximum tolerance allowed between the design of the curved section and the actual chord programmed. This is the dimension T. The program for a parabolic-span control unit requires enough spans for any deviation to stay within an acceptable tolerance. For a tolerance of $T = 0.001$ in., how long should the span be for a curve with a 5-in. radius.? Assume that the arc is part of a circle. What is the span angle here, in degrees?

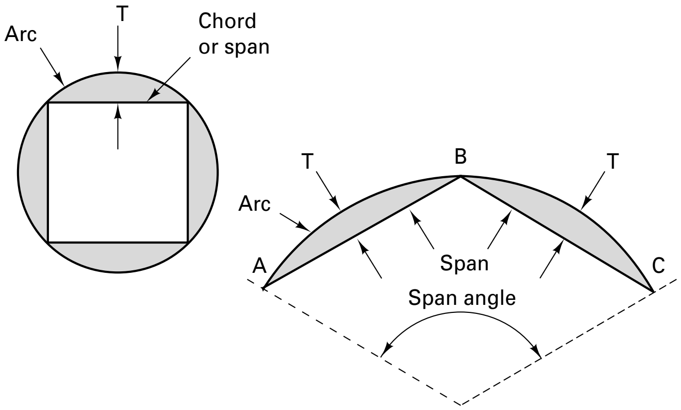

FIGURE 26-A

3. In Problem 2, suppose that the acceptable tolerance was 0.0001 in. Determine the span angle.
4. Suppose that the plate shown in Figure 26-B was to be profile milled around the periphery with a 1-in.-diameter end milling cutter. The dashed line is the cutter path. The programmer must calculate an offset path to allow for cutter diameter. Since the programmed points are followed by the cutter centerline and the profile is made at the tool's periphery, the programmer called for a $^{1}/_{2}$-in. cutter offset. Working with computer assistance, the programmer would describe the part profile to be machined and specify the cutter. The computer would generate the cutter path. Complete the table below to specify the cutter path, starting with the origin at the zero reference point. Move the tool around the plate counterclockwise.

Programmed Point Locations

PT	*X*	*Y*
1		
2		
3		
4		
5		
1		

5. Suppose that surface finish is very important for the profile milling job described in Problem 4. Thus down milling is going to be used. Rewrite the NC program points to accommodate this requirement. Show the new path on a sketch such as Figure 26-B. (Up versus down milling is discussed in Chapter 25.)
6. You have received the part drawing for a typical lathe part that will require turning, facing, grooving, boring, and threading as it is machined from a casting. See Figure 26-C. Unfortunately, you do not yet know how many of these parts will be ordered this year, so you do not know what the build quantity will be. To be prepared, you have developed some cost data for the manufacture of the part by four different lathe processes (see Table 26-A). Complete the table by determining the run cost per batch, the cost per unit at the various quantities, and the total cost per batch. Answer the following questions regarding this situation:

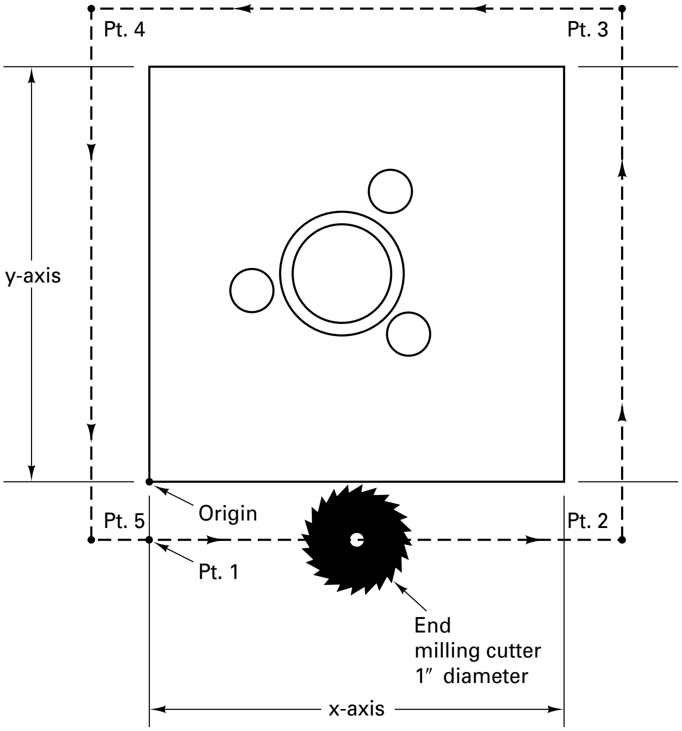

FIGURE 26-B

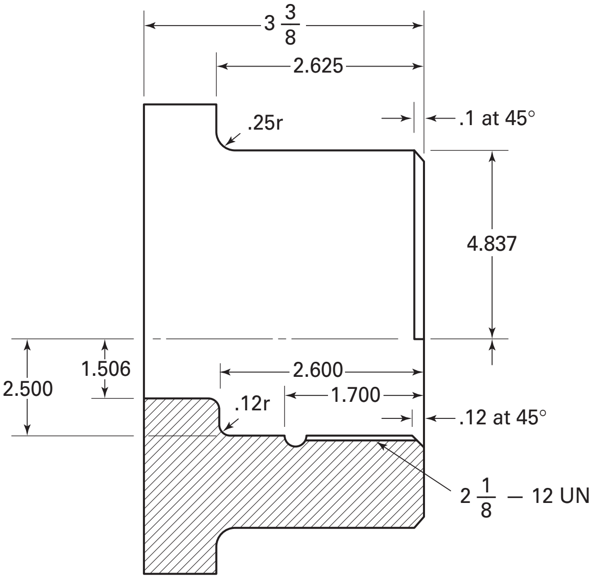

FIGURE 26-C

1. Of the four costs listed for each process, which costs are fixed and which are variable?
2. What is included in the cost per unit? Do you need to estimate the machining time per piece and the cycle time per piece, including the time to change parts and setups in order to compute run cost?
3. How would you go about estimating this time, and what time elements might be included in the cycle time in addition to the machining time?
4. How would you use this estimate of time in the cost table? Show the calculation.
5. Make a plot of cost in dollars versus quantity, with all four methods on one plot.
6. Make a plot of cost per unit versus quantity, again with all four methods on one plot. Find the break-even quantities. (*Hint:* Did you plot the data on log paper?)
7. Discuss the break-even quantities that you found in part 5 versus part 6. (They should be the same.)
8. When would you use the NC lathe? The turret lathe? When would you use the turret lathe if you have no NC lathe?

TABLE 26-A Cost Data for Lathe Processes

	Make Quantity				
	10,000 Units	1,000 Units	100 Units	10 Units	1 Unit
Cost to produce on six-spindle automatic					
Total cost of batch	—	—	—	—	—
Engineering 2.5 hr at $40 /hr	50.00	50.00	50.00	50.00	50.00
Tooling (cutting tools and workholders)	600.00	600.00	600.00	600.00	600.00
Setup 8 hr at $15/hr	120.00	120.00	120.00	120.00	120.00
Run cost per batch: 50 per piece	5000.00	500.00	50.00	5.00	0.5
Cost each	—	—	—	—	—
Cost to produce on turret lathe					
Total cost of batch					
Engineering 2 hr at $20/ hr	—	—	—	—	—
Tooling	40.00	40.00	40.00	40.00	40.00
Setup 4 hr at $20/hr	150.00	150.00	150.00	150.00	150.00
Run cost per batch: $8 per piece	48.00	48.00	48.00	48.00	48.00
Cost each	—	—	—	—	—
	—	—	—	—	—
Cost to produce on engine lathe					
Total cost of batch	—	—	—	—	—
Engineering 1 hr at $20/hr	20.00	20.00	20.00	20.00	20.00
Tooling (no cost)	—	—	—	—	—
Setup 2 hr at $12.00/hr	24.00	24.00	24.00	24.00	24.00
Run cost per batch: $12	120,000.00	12000.00	120.00	120.00	12.00
Cost each	12.00				
Cost to produce on NC lathe					
Total cost of batch	—	—	—	—	—
Engineering and programming	150.00	150.00	150.00	150.00	150.00
Tooling	100.00	100.00	100.00	100.00	100.00
Setup 1 hr at $20/hr	20.00	20.00	20.00	20.00	20.00
Run cost per batch: $2 per piece	—	—	—	—	—
Cost each	—	—	—	—	—

Chapter 26 CASE STUDY

Process Planning for the MfE

Figure CS 26a shows a part design for a small flange to be made out of 1020 steel. Prepare a sequence of operations or process plan to make this part. Note that you need to machine the top, bottom, and all the holes. Specify the machines and the tools you would use assuming you select bar stock as your raw material. The term Co bore in the drawing means counter bore. Check with your instructor for an example of a process plan. Assume the lot size here is 1200 parts/year made in lots of 120 every month.

Now assume that the designer provides you a design like CS 26b and calls for the flange to be made from cast iron. The casting will probably have a large hole in the center cored during the casting process. What casting process will you use? Prepare another process plan for the cast part. Will the sequence of operations be the same? What about the cost per unit? Which will be lower?

1. The part drawings failed to provide a critical specification in the design. What is it?
2. The drawing failed to show the final geometry (in the top view) correctly. Redraw the part to show these corrections.
3. As the process engineer, how would you advise the design engineer he screwed up twice?

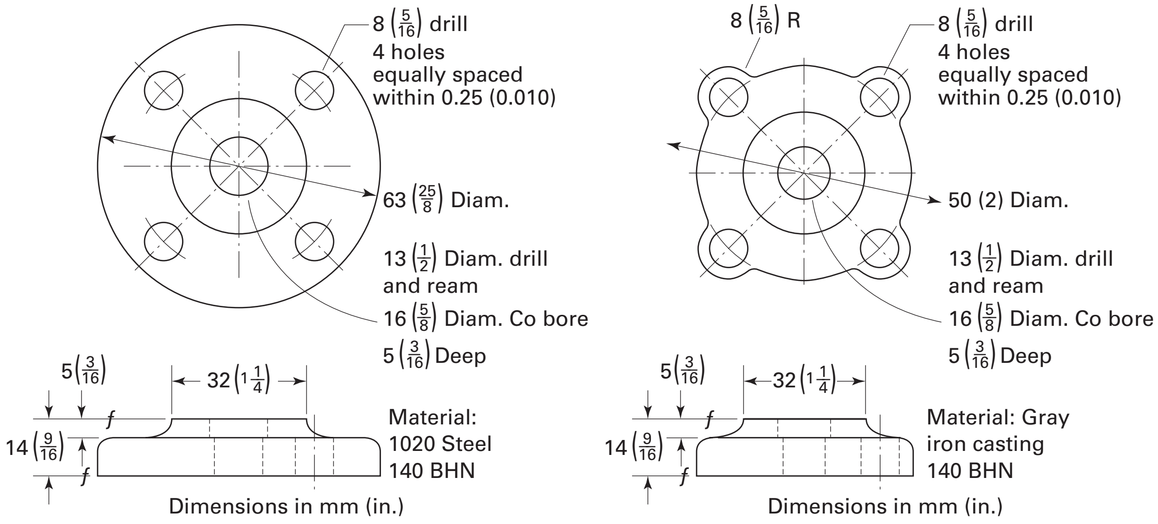

Figure CS 26a

Figure CS 26b

Figure CS 26 Two different designs of a flange. The design on the right suggested by Doyle et al. in 3rd edition of *Manufacturing Process and Materials for Engineers,* Prentice-Hall.

CHAPTER 27

OTHER MACHINING PROCESSES

■ 27.1 INTRODUCTION

While milling, drilling, and turning make up the bulk of the machining processes, there are many other chipmaking (metal removal) processes. This chapter will cover shaping, planing, broaching, sawing, and filing.

■ 27.2 INTRODUCTION TO SHAPING AND PLANING

The processes of *shaping* and *planing* are among the oldest single-point machining processes. Shaping has largely been replaced by milling and broaching as a production process, while planing still has applications in producing long flat cuts, like those in the ways of machine tools. From a consideration of the relative motions between the tool and the workpiece, shaping and planing both use a straight-line cutting motion with a single-point cutting tool to generate a flat surface.

In shaping, the workpiece is fed at right angles to the cutting motion between successive strokes of the tool, as shown in Figure 27-1, where f_c is the feed per stroke, V is the cutting speed, and d is the depth of cut (DOC). (In planing, discussed next, the workpiece is reciprocated and the tool is fed at right angles to the cutting motion.) For either shaping or planing, the tool is held in a clapper box, which prevents the cutting edge from being damaged on the return stroke of the tool. In addition to plain flat surfaces, the shapes most commonly produced on the shaper and planer are those illustrated in Figure 27-2. Relatively skilled workers are required to operate shapers and planers, and most of the shapes that can be produced on them can also be made by much more productive processes, such as milling, broaching, or grinding. Consequently, except for certain special types, planers that will do only planing have become obsolete. Today, shapers are used mainly in tool and die work, in very low volume production, or in the manufacture of gear teeth.

In shaping, the cutting tool is held in the tool post located in the ram, which reciprocates over the work with a forward stroke, cutting at velocity V and a quick return stroke at velocity V_R. The rpm of drive crank (N_s) drives the ram and determines the velocity of the operation (see Figure 27-1d). The stroke ratio is

$$R_s = \frac{\text{cutting stroke angle}}{360^\circ} = \frac{200^\circ}{360^\circ} = \frac{5}{9} \tag{27-1}$$

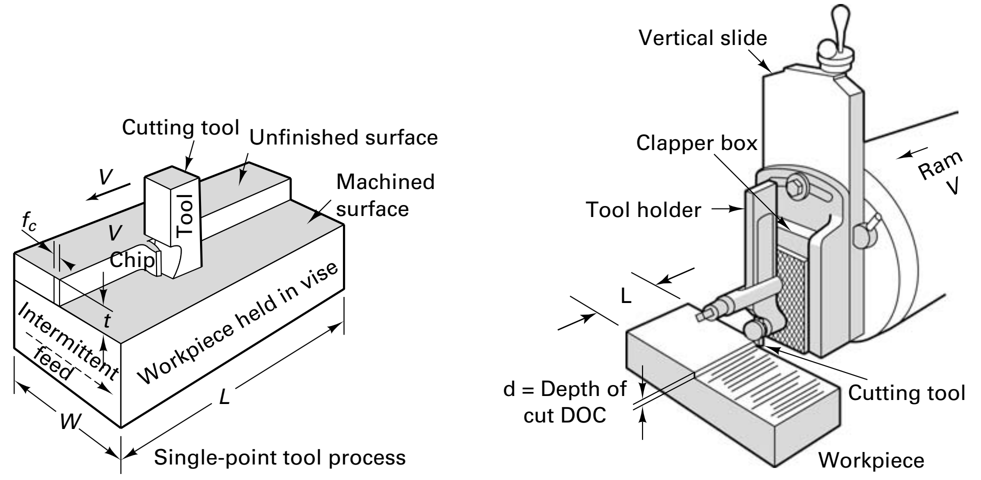

(a) Basic geometry for shaping and planing

(c) Shaper tool holder, clapper box and workpiece

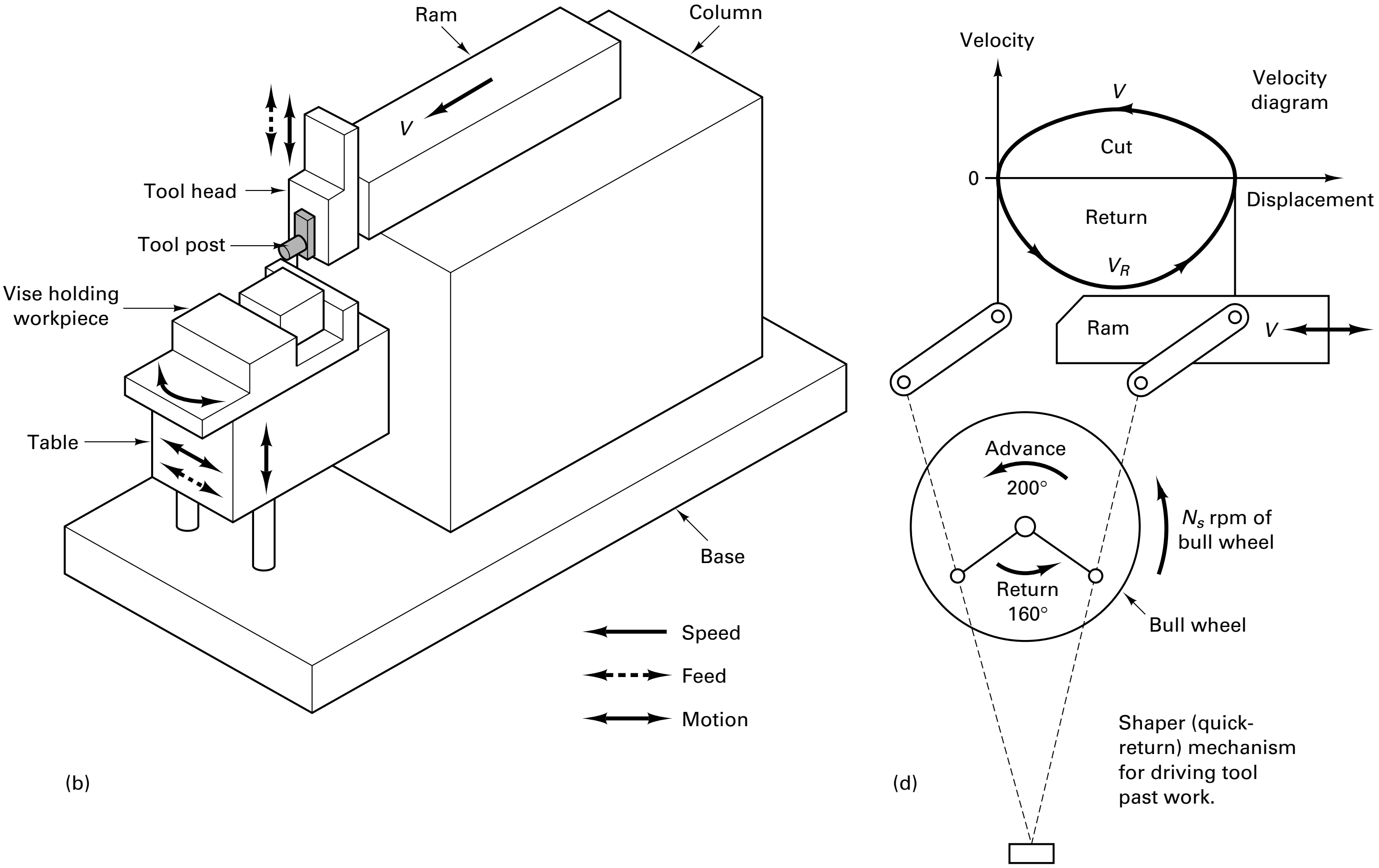

FIGURE 27-1 Basics of shaping and planing. (a) The cutting speed, V, and feed per stroke f_c. (b) Block diagram of the machine tool. (c) The cutting tool is held in a clapper box so the tool does not damage the workpiece on the return stroke. (d) The ram of the shaper carries the cutting tool at cutting velocity V and reciprocates at velocity V_R by the rotation of a bull wheel turning at rpm n_s.

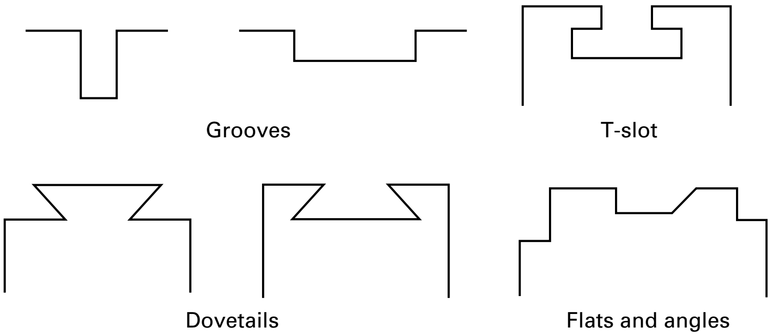

FIGURE 27-2 Types of surfaces commonly machined by shaping and planing.

The tool is advancing 55% of the time. The number of strokes per minute is determined by the rpm of the drive crank. Feed is in inches per stroke and is at right angles to the cutting direction. As in other machining processes, speed and feed are selected by the operator.

The length of stroke l must be greater than the length of the workpiece (or length of cut) L, since velocity is position variant. Let l = twice the length of the block being cut, or $2L$. The cutting velocity V is assumed to be twice the average forward velocity V of the ram. The general relationship between cutting speed and rpm is

$$V = \frac{\pi D N_s}{12 R_s} \text{ft/min} \tag{27-2}$$

where D is the diameter (of the rotating bull wheel) in inches. For shaping, the cutting speed is

$$V = \frac{2 I N_s}{12 R_s} \text{ft/min} \tag{27-3}$$

Once a cutting speed is selected, the rpm of the machine can be calculated. Tables for suggested feed values, f_c, are in inches per stroke (or cycle), and recommended depths of cut are also available. The maximum depth of cut is based on the horsepower available to form the chips. This calculation requires that the metal removal rate (MRR) be known. The MRR is the volume of metal removed per unit time

$$\text{MRR} = \frac{LWd}{T_m} \text{in.}^3/\text{min} \tag{27-4}$$

where W is the width of block being cut and L is the length of block being cut, so volume of cut = WLd, where d is the depth of cut and T_m is the time in minutes to cut that volume.

In general, T_m is the total length of the cut divided by the feed rate. For shaping, T_m is the width of the block divided by the feed rate f_c of the tool moving across the width. Thus, for shaping,

$$T_m = \frac{W}{N_s \times f_c} \tag{27-5}$$

Also,

$$T_m = \frac{S}{N_s} \tag{27-6}$$

where the number of strokes for the job is for a surface of width W.

MACHINE TOOLS FOR SHAPING

Shapers, as machine tools, are usually classified according to their general design features as follows:

1. Horizontal
   - **a.** Push-cut
   - **b.** Pull-cut or draw-cut shaper

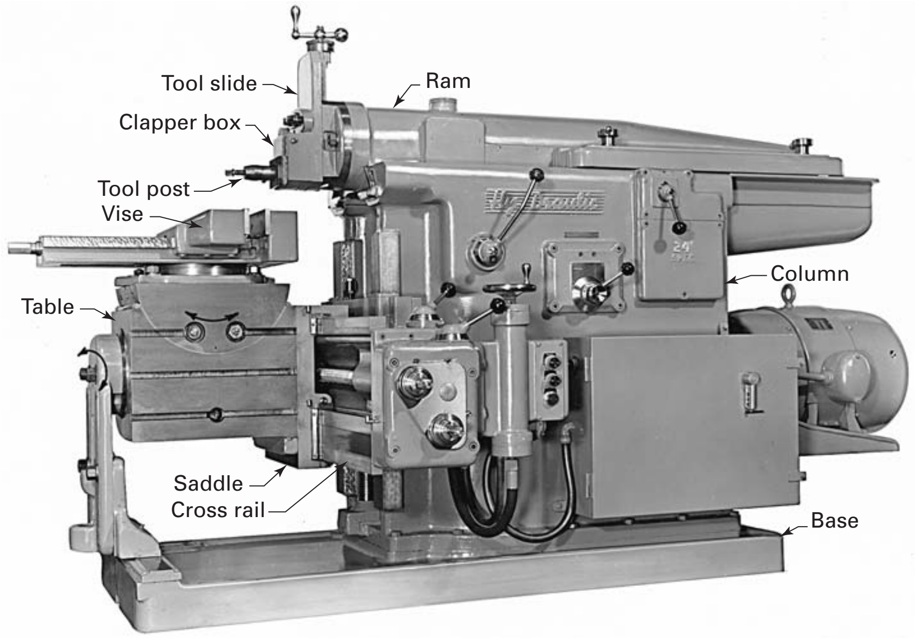

FIGURE 27-3 The most widely used shaper is the horizontal push-cut machine tool, shown here with no tool in the tool post.

2. Vertical
   a. Regular or slotters
   b. Keyseaters
3. Special

They are also classified as to the type of drive employed: *mechanical drive* or *hydraulic drive*. Most shapers are of the *horizontal push-cut* type (Figure 27-3), where cutting occurs as the ram *pushes* the tool across the work.

On horizontal push-cut shapers, the work is usually held in a heavy vise mounted on the top side of the table. Shaper vises have a very heavy movable jaw, because the vise must often be turned so that the cutting forces are directed against this jaw.

In clamping the workpiece in a shaper vise, care must be exercised to make sure that it rests solidly against the bottom of the vise (on parallel bars) so that it will not be deflected by the cutting force and so that it is held securely yet not distorted by the clamping pressure.

Most shaping is done with simple high-speed-steel or carbide-tipped cutting tool bits held in a heavy, forged tool holder. Although shapers are versatile tools, the precision of the work done on them is greatly dependent on the operator. Feed dials on shapers are nearly always graduated in 0.001-in. divisions, and work is seldom done to greater precision than this. A tolerance of 0.002 to 0.003 in. is desirable on parts that are to be machined on a shaper, because this gives some provision for variations due to clamping, possible looseness or deflection of the table, and deflection of the tool and ram during cutting.

PLANING MACHINES

Planing can be used to produce horizontal, vertical, or inclined flat surfaces on large workpieces (too large for shapers). However, planing is much less efficient than other basic machining processes, such as milling, that will produce such surfaces. Consequently, planing and planers have largely been replaced by planer milling machines or machines that can do both milling and planing.

Figure 27-4 shows the basic components and motions of planers. In most planing, the action is opposite to that of shaping. The work is moved past one or more stationary single-point cutting tools. Because a large and heavy workpiece and table must be reciprocated at relatively low speeds, several tool heads are provided, often with multiple tools in each head. In addition, many planers are provided with tool heads arranged so that cuts occur on both directions of the table movement. However, because only single-point cutting tools are used and the cutting speeds are quite low, planers are low in productivity as compared with some other types of machine tools.

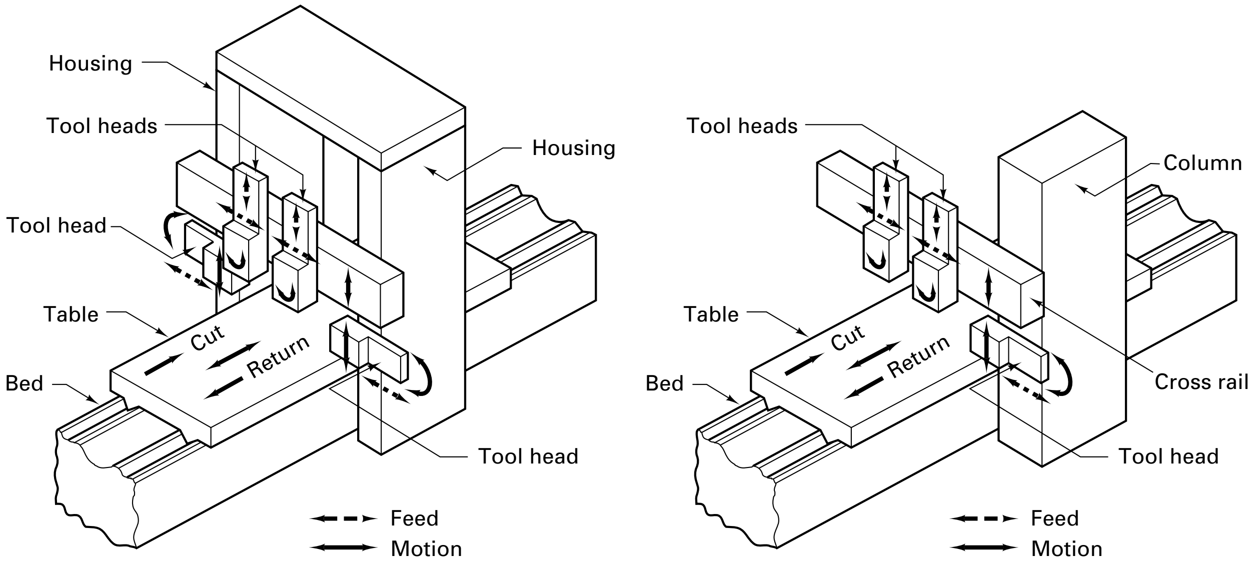

(a) Block diagram showing the basic components of a double-housing planer.

(b) Block diagram of an open-side planer.

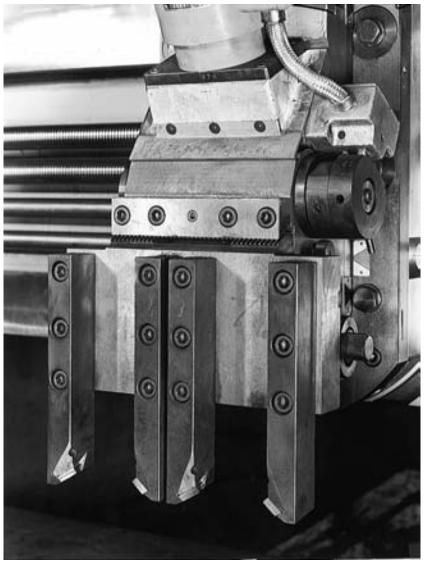

(c) Four planer tools in tool holder

FIGURE 27-4 Schematic of planers. (a) Double-housing planer with multiple tool heads (4) and a large reciprocating table; (b) single-housing or open-sided planer; (c) interchangeable multiple tool holder for use in planers. *(Photograph courtesy Gebr Boehringer GmbH.)*

Figure 27-4 depicts the most common double-housing and single-housing types. The double-housing has a closed-housing structure, spanning the reciprocating worktable, with a cross rail supported at each end on a vertical column and carrying two tool heads. An additional tool head is usually mounted on each column, so that four tools (or four sets) can cut during each stroke of the table. Obviously, the closed-frame structure of this type of planer limits the size of the work that can be machined. Open-side planers have the cross rail supported on a single column. This design provides unrestricted access to one side of the table to permit wider workpieces to be accommodated. Some open-side planers are convertible, in that a second column can be attached to the bed when desired so as to provide added support for the cross rail.

WORKHOLDING AND SETUP ON PLANERS

Workpieces in planers are usually large and heavy. They must be securely clamped to resist large cutting forces and the high-inertia forces that result from the rapid velocity changes at the ends of the strokes. Special stops are provided at each end of the workpiece to prevent it from shifting.

Considerable time is usually required to set up the planer, thus reducing the time the machine is available for producing chips. Sometimes special setup plates are used for quick setup of the workpiece. Another procedure is to use two tables. Work is set up on one table while another workpiece is being machined on the other. The tables can be fastened together for machining long workpieces.

The large workpieces can usually support heavy cutting forces, so large depths of cut are recommended, which decrease the cutting time. Consequently, planer tools usually are quite massive and can sustain the large cutting forces. Usually, the main shank of the tools is made of plain-carbon steel, with tips made from high-speed steel or carbide. Chip breakers should be used to avoid long and dangerous chips in ductile materials.

Theoretically, planers have about the same precision as shapers. The feed and other dimension-controlling dials are usually graduated in 0.001-in. divisions. However, because larger and heavier workpieces are usually involved, and much longer beds and tables, the working tolerances for planer work are somewhat greater than for shaping.

■ 27.3 INTRODUCTION TO BROACHING

The process of *broaching* is one of the most productive of the basic machining processes. The machine tool is called a *broaching machine* or a *broach* and the cutting tool is also called the *broach*. Figure 27-5 shows the basic shape of a conventional pull broach. In this figure, P = pitch, n_s is the number of semiroughing teeth, and n_f is the number of finishing teeth where the rise per tooth gets smaller from rough to finish.

The feed per tooth in broaching is the change in height of successive teeth. This is called the rise per tooth (RPT or t_r; see Figure 27-6). Broaching looks similar to sawing except that the saw makes many passes through the cut, whereas the broach produces a finished part in one pass. The heart of this process lies in the broaching tool, in which roughing, semifinishing, and finishing teeth are combined into one tool, as shown in Figure 27-5. Broaching is unique in that it is the only one of the basic machining processes in which *feed*, which determines the chip thickness, is built into the cutting tool. The machined surface is always the inverse of the profile of the broach, and, in most cases,

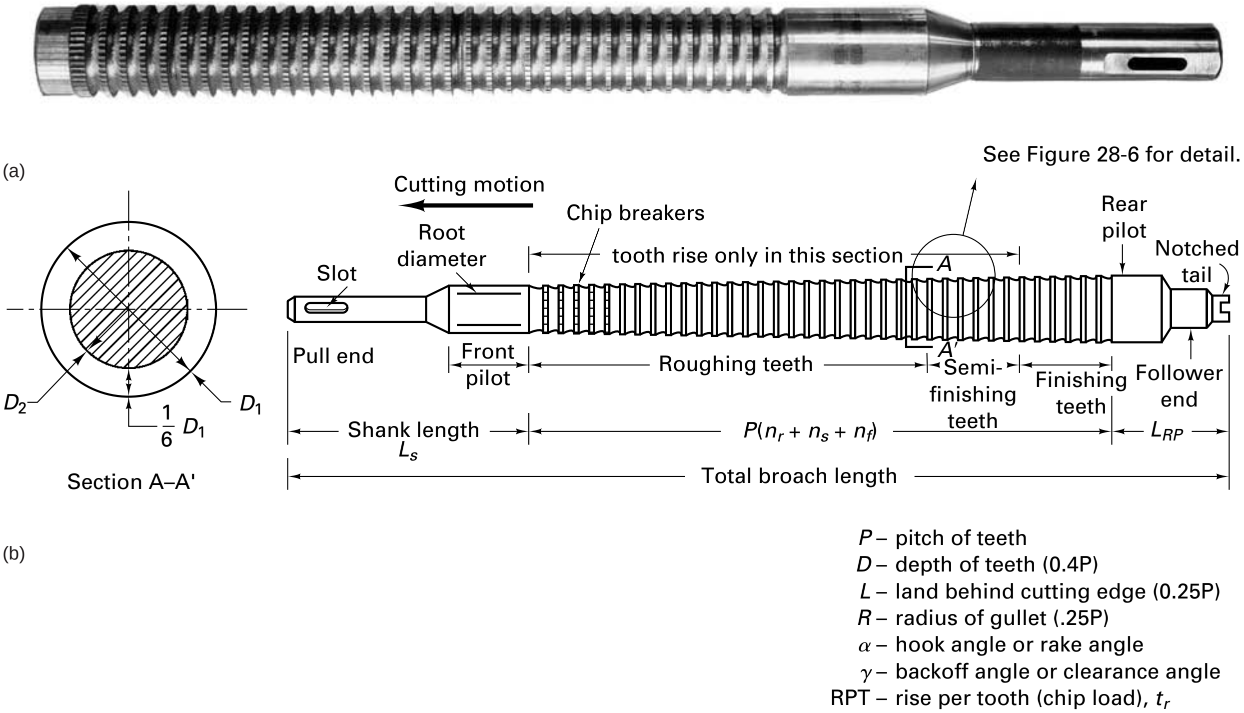

FIGURE 27-5 (a) Photo of pull broach. (b) Basic shape and nomenclature for a conventional pull (hole) broach. Section A–A′ shows the cross section of a tooth. P = pitch; n_r=number of roughing teeth; n_s = number of semifinishing teeth; n_f = number of finishing teeth.

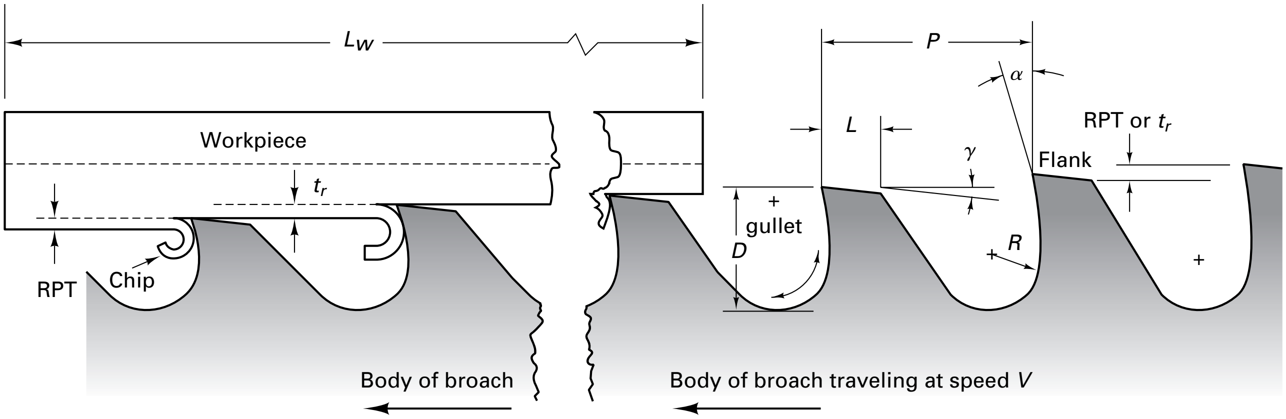

FIGURE 27-6 The feed in broaching depends on the rise per tooth t_r (RPT). The sum of the RPT gives the depth of cut, DOC. P = pitch of teeth; D = depth of teeth ($0.4P$); L = land behind cutting edge ($0.25P$); R = radius of gullet ($0.25P$); α = hook angle or rake angle; γ = backoff angle or clearance angle.

it is produced with a single linear stroke of the tool across the workpiece (or the workpiece across the broach).

Broaching competes economically with milling and boring and is capable of producing precision-machined surfaces. The broach finishes an entire surface in a single pass. Broaches are used in production to finish holes, splines, and flat surfaces. Typical workpieces include small to medium-sized castings, forgings, screw-machine parts, and stampings.

This rise per tooth (RPT), also known as *step* or the feed per tooth, determines the amount of material removed. No feeding of the broaching tool is required. The frontal contour of the teeth determines the shape of the resulting machined surface. As the result of these conditions being built into the tool, no complex motion of the tool relative to the workpiece is required and the need for highly skilled machine operators is minimized.

Figure 27-7 shows a *pull broach* in a vertical pull-down broaching machine. The pull end of the broach is passed through the part, and a key mates to the slot. The broach is pulled through the part. The broach is retracted (pulled up) out of the part. The part is transferred from the left fixture to the right fixture. One finished part is completed in every manufacturing cycle.

27.4 FUNDAMENTALS OF BROACHING

In broaching, the tool (or work) is translated past the work (or tool) with a single stroke of velocity V. The feed is provided by a gradual increase in height of successive teeth. The rise per tooth varies depending on whether the tooth is for roughing (t_r), semifinishing (t_s), or final sizing or finishing (t_f). In a typical broach there are three to five semifinishing and finishing teeth specified. The number of roughing teeth must be determined so that broach length, which is needed to estimate the cutting time, can be calculated. Other lengths needed for a typical pull broach are shown in Figure 27-6. The chip breakers in the first section of roughing teeth may be extended to more teeth if the cut is heavy or material difficult to machine. The distance between the teeth, called the pitch P, is important because it determines the tooth construction and strengths and the number of teeth actually cutting at a given instant. It is preferable that at least two teeth be in contact with the workpiece at any instant.

The pitch or distance between teeth is

$$P \cong 35\sqrt{L_w} \tag{27-7}$$

where length of cut usually equals L_w, as shown in Figure 27-5.

The number of roughing teeth is

$$n_r = \frac{\text{DOC} - n_s t_s - n_f t_f}{t_r} \tag{27-8}$$

where DOC is the total amount of metal to be removed and is the rise per tooth.

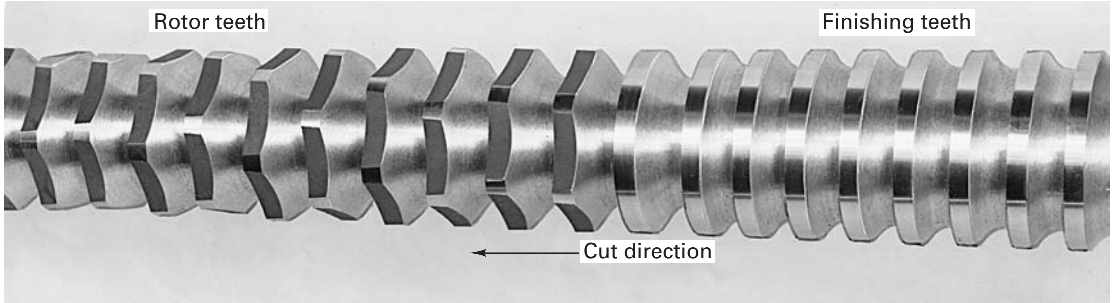

(a) Rotor- or jump-tooth broach design.

(b) Round, push-type broach with chip-breaking notches on alternate teeth except at the finishing end.

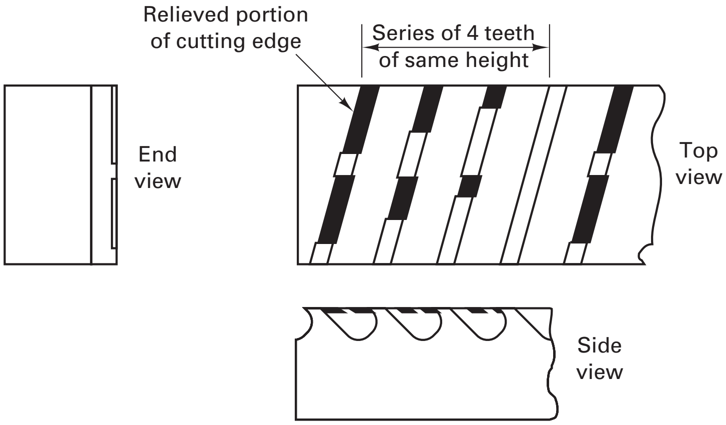

(c) Notched tooth, flat broach

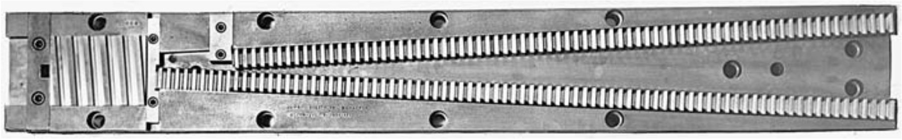

(d) Progressive surface broach. *(Courtesy of Detroit Broach & Machine Company)*

FIGURE 27-7 Methods to decrease force or break up chip rings in broaches. (a) Rotor or jump tooth; (b) notched tooth, round; (c) notched tooth, flat design (overlapping teeth permit large RPTs without increasing chip load); (d) progressive tooth design for flat broach.

The overall length of the broach for a pull broach is

$$L_B = (n_r + n_s + n_f)\, P + L_s + L_{RP} \tag{27-9}$$

The length of stroke is $L = L_B - L_w$, in inches, if the broach moves past work or $L_w + L_B$ if the work moves past the broach. The cutting time is

$$T_m = \frac{L}{12V} \tag{27-10}$$

where V is the cutting speed, in surface feet per minute.

The metal removal rate depends upon the number of teeth (roughing) contacting the work.

$$\text{MRR (per tooth)} = 12t_r WV \text{ in.}^3\text{/min per roughing tooth} \tag{27-11}$$

where W is the width of broach tooth.

The number of roughing teeth in contact with part $n \cong L_w/P$ for a broach longer than the part.

$$\text{MRR (for process)} = 12t_rWV \text{ in.}^3/\text{min} \tag{27-12}$$

where n is usually rounded off to the next-largest whole number.

The pull broach must be strong enough so that it will not be pulled apart. The strength of a pull broach is determined by its minimum cross section, which occurs either at the root of the first tooth or at the pull end:

$$\text{allowable pull} = \frac{\text{area of minimum section} \times \text{Y.S. of broach material}}{\text{factor of safety}} \tag{27-13}$$

where Y.S. is yield strength.

The *push broach* must be strong enough so that it will not buckle. If the length-to-diameter ratio, L/D_r, is greater than 25, the broach must be considered a long column that can buckle if overloaded. Let L = length from push end to first tooth, D_r = root diameter at $0.5L$, and S = factor of safety:

$$\text{allowable load} = \frac{13.5 \times 10^6 \times D_r^4}{SL^2} \tag{27-14}$$

For L/D_r less than 25, the normal broach loads are not critical.

Calculation of the total push or pull load depends upon the number of teeth engaged, n estimated from L_w/P; the width of the cut, W; the RPT per tooth engaged, t_r; and the shear strength of the metal being machined.

The force necessary to operate a broach depends upon the material being broached, the conditions of the tool, and the nature of the process. An empirical constant is required in the force calculation to account for the large amount of rubbing (friction) between the tool, the chips captured in the tooth gullet, and the workpiece.

Let F_{CB} be the broach pull force in pounds:

$$F_{CB} \cong 5\tau_s n t_r W \tag{27-15}$$

where τ_s is flow stress.

τ_s found in Chapter 20, depends upon the hardness for the metal. This force estimate can be used to estimate the horsepower needed for the broaching machine.

THE ADVANTAGES AND LIMITATIONS OF BROACHING

Because of the features built into a broach, it is a simple and rapid method of machining. There is a close relationship among the contour of the surface to be produced, the amount of material that must be removed, and the design of the broach. For example, the total depth of the material to be removed cannot exceed the total step provided in the broach, and the step of each tooth must be sufficient to provide proper chip thickness for the type of material to be machined. Consequently, either a special broach must be made for each job or the workpiece must be designed so that a standard broach can be used. Broaching is widely used and particularly well suited for mass production because the volume can easily justify the cost of the broaching tool, which can be easily \$15,000 to \$30,000 per tool. It is also used for certain simple and standardized shapes, such as keyways, where inexpensive standard broaches can be used.

Broaching was originally developed for machining internal keyways. However, its obvious advantages quickly led to its development for mass-production machining of various surfaces, such as flat, interior or exterior, cylindrical or semicylindrical, and many irregular surfaces. Because there are few limitations as to the contour form that broach teeth may have, there is almost no limitation in the shape of surfaces that can be produced by broaching. The only physical limitations are that there must be no obstruction to interfere with the passage of the entire tool over the surface to be machined and that the workpiece must be strong enough to withstand the forces involved. In internal broaching, a hole must exist in the workpiece into which the broach may enter. Such a hole can be made by drilling, boring, or coring.

Broaching usually produces better accuracy and finish than can be obtained by drilling, boring, or reaming. Although the relative motion between the broaching tool and the work usually is a single linear one, a rotational motion can be added to permit the broaching of spiral splines or gun-barrel rifling.

BROACH DESIGN (THE CUTTING TOOL)

Broaches commonly are classified by the following design features:

Purpose	Motion	Construction	Function
Single	Push	Solid	Roughing
Combination	Pull	Built-up	Sizing
	Stationary		Burnishing

Figure 27-5 shows the principal components of a pull broach and the shape and arrangement of the teeth. Each tooth is essentially a single-edge cutting tool, arranged much like the teeth on a saw except for the step, which determines the depth cut by each tooth, as shown in Figure 27-6. The rise per tooth, which determines the chip load, varies from about 0.006 in. for roughing teeth in machining free-cutting steel to a minimum 0.001 in. for finishing teeth. Typically the RPT is 0.003 to 0.006 in. in surface broaching and 0.0012 to 0.0025 in. on the diameter for internal broaching. The exact amount depends on several factors. Too-large cuts impose undue stresses on the teeth and the work; too-small cuts result in rubbing rather than cutting action. The strength and ductility of the metal being cut are the primary factors.

Where it is desirable for each tooth to take a deep cut, as in broaching castings or forgings that have a hard, abrasive surface layer, *rotor-cut* or *jump-cut* tooth design may be used (Figure 27-7). In this design, two or three teeth in succession have the same diameter, or height, but each tooth of the group is notched or cut away so that it cuts only a portion of the circumference or width. This permits deeper but narrower cuts by each tooth without increasing the total load per tooth. This tooth design also reduces the forces and the power requirements. Chip-breaker notches are also used on round broaches to break up the chips (Figure 27-7b).

A similar idea can be used for flat surfaces. Tooth loads and cutting forces also can be reduced by using the *double-cut* construction, shown in Figure 27-7c. Four consecutive teeth get progressively wider. The teeth remove metal over only a portion of their width until the fourth tooth completes the cut.

Another technique for reducing tooth loads utilizes the principle illustrated in Figure 27-7d. Employed primarily for broaching wide, flat surfaces, the first few teeth in *progressive* broaches completely machine the center, while succeeding teeth are offset in two groups to complete the remainder of the surface. Rotor, double-cut, and progressive designs require the broach to be made longer than if normal teeth were used, and they therefore can be used only on a machine having adequate stroke length.

The cutting edges of the teeth on surface broaches may be either normal to the direction of motion or at an angle of from 5° to 20°. The latter, *shear-cut* broaches, provide smoother cutting action with less tendency to vibrate. Other shapes that can be broached are shown in Figure 27-8 along with push- or pull-type broaches used for the job.

The pitch of the teeth and the gullet between them must be sufficient to provide ample room for the chips. All chips produced by a given tooth during its passage over the full length of the workpiece must be contained in the space between successive teeth.

At the same time, it is desirable to have the pitch sufficiently small so that at least two or three teeth are cutting at all times.

The *hook* determines the primary rake angle and is a function of the material being cut. It is 15° to 20° for steel and 6° to 8° for cast iron. *Back-off* or end clearance angles are from 1° to 3° to prevent rubbing.

Most of the metal removal is done by the *roughing teeth*. *Semifinishing teeth* provide surface smoothness, whereas *finishing teeth* produce exact size. On a new broach all the finishing teeth are usually the same size. As the first finishing teeth become worn, those behind continue the sizing function. On some round broaches, *burnishing teeth* are provided for finishing. These teeth have no cutting edges but are rounded disks of

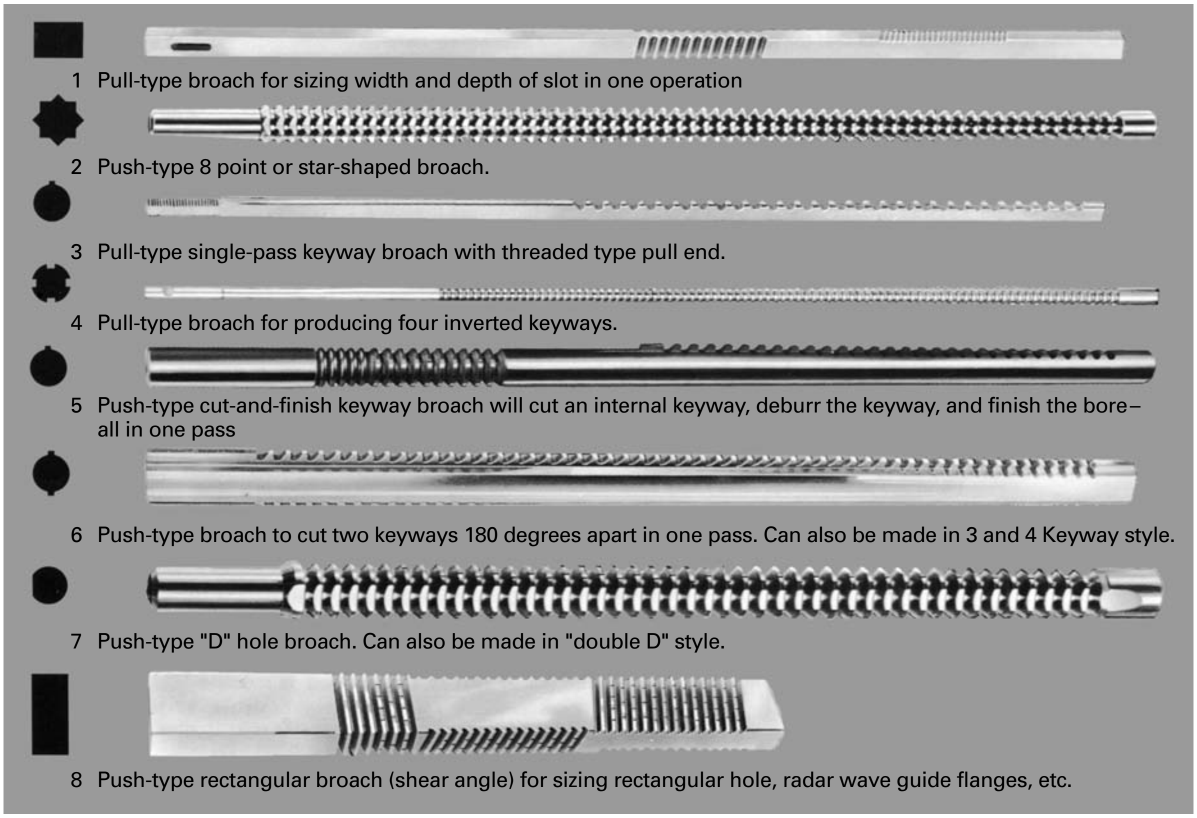
1 Pull-type broach for sizing width and depth of slot in one operation

2 Push-type 8 point or star-shaped broach.

3 Pull-type single-pass keyway broach with threaded type pull end.

4 Pull-type broach for producing four inverted keyways.

5 Push-type cut-and-finish keyway broach will cut an internal keyway, deburr the keyway, and finish the bore–all in one pass

6 Push-type broach to cut two keyways 180 degrees apart in one pass. Can also be made in 3 and 4 Keyway style.

7 Push-type "D" hole broach. Can also be made in "double D" style.

8 Push-type rectangular broach (shear angle) for sizing rectangular hole, radar wave guide flanges, etc.

FIGURE 27-8 Examples of push- or pull-type broaches. *(Courtesy of DuMont Corporation.)*

hard steel or carbide that are from 0.001 to 0.003 in. larger than the size of the hole. The resulting rubbing action smooths and sizes the hole. They are used primarily on cast iron and nonferrous metals.

The *pull end* of a broach provides a means of quickly attaching the broach to the pulling mechanism. The *front pilot* aligns the broach in the hole before it begins to cut, and the *rear pilot* keeps the tool square with the finished hole as it leaves the workpiece. *Shank length* must be sufficient to permit the broach to pass through the workpiece and be attached to the puller before the first roughing tooth engages the work. If a broach is to be used on a vertical machine that has a tool-handling mechanism, a *tail* is necessary.

A broach should not be used to remove a greater depth of metal than that for which it is designed—the sum of the steps of all the teeth. In designing workpieces, a minimum of 0.020 in. should be provided on surfaces that are to be broached, and about 0.025 in. is the practical maximum.

BROACHING SPEEDS, ACCURACY, FINISH

Depending on the metal being cut, cutting speeds for broaching range from low (25 to 20 sfpm) to high while completing the surface in a single stroke, so the productivity is high. A complete cycle usually requires only from 5 to 30 seconds, with most of that time being taken up by the return stroke, broach handling, and workpiece loading and unloading. Such cutting conditions facilitate cooling and lubrication and result in very low tool wear rates, which reduce the necessity for frequent resharpening and prolong the life of the expensive broaching tool.

For a given cutting speed and material, the force required to pull or push a broach is a function of the tooth width, the step, and the number of teeth cutting. Consequently, it is necessary to design or specify a broach within the stroke length and power limitations of the machine on which it is to be used. The average machining precision is typically ±0.001-in. (±0.02-mm) tolerance with surface finish 120 to 60 RMS or better. Burrs are minimal on the exit side of cuts.

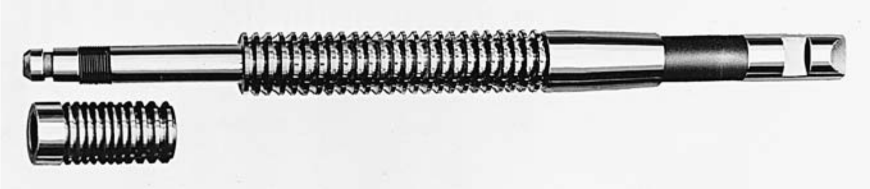

FIGURE 27-9 Shell construction for a pull broach.

BROACHING MATERIALS AND CONSTRUCTION

Because of the low cutting speeds employed, most broaches are made of alloy or high-speed tool steel. Carbide-tipped broaches are seldom used for machining steel parts or forgings, as the cutting edges tend to chip on the first stroke, probably due to a lack of rigidity in the combination of machine tool and cutting tool. TiN coating of high-speed-steel (HSS) broaches is becoming more common, greatly prolonging the life of broaches. When they are used in continuous mass-production machines, particularly in surface broaching of cast iron, tungsten carbide teeth may be used, permitting the broach to be used for long periods of time without resharpening.

Internal broaches are usually solid but may be made of *shells* mounted on an arbor (Figure 27-9). When the broach (or a section of it) is subject to rapid wear, a single shell can be replaced. This will be much cheaper than replacing an entire solid broach. Shell construction, however, is initially more expensive than a solid broach of comparable size.

Small-surface broaches may be of solid construction, but larger ones usually use modular construction (Figure 27-10). Building in sections makes the broach easier and cheaper to construct and sharpen. It also often provides some degree of interchangeability of the sections for different parts, bringing down the tool cost significantly.

SHARPENING BROACHES

Most broaches are resharpened by grinding the hook faces of the teeth. The lands of internal broaches must not be reground because this would change the size of the broach. Lands of flat-surface broaches are sometimes ground, in which case all of them must be ground to maintain their proper relationship.

■ 27.5 BROACHING MACHINES

Because all the factors that determine the shape of the machined surface and that determine all cutting conditions except speed are built into the broaching tool, broaching machines are relatively simple. Their primary functions are to impart plain reciprocating motion to the broach and to provide a means for handling the broach automatically.

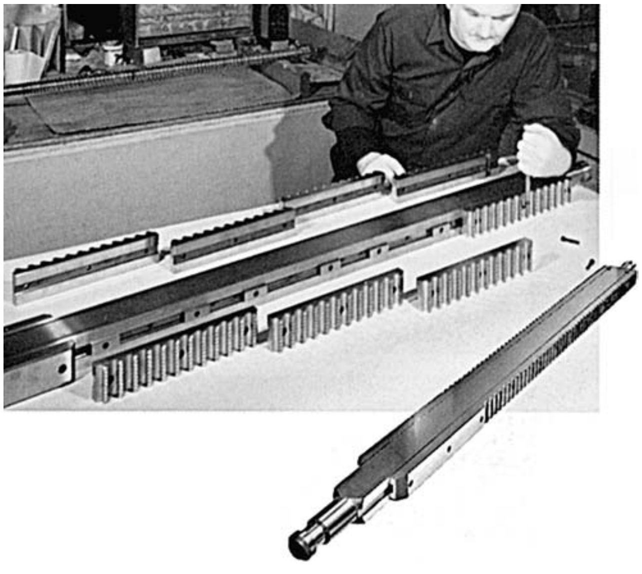

FIGURE 27-10 A modularly constructed broach is cheaper to build and can be sharpened in sections.

TABLE 27-1 Broaching Machines

Vertical	
Push-broaching	Arbor press with guided ram 5- to 50-ton capacity Internal broaching
Pull-down	Double-ram design most common Long changeover times
Pull-up	Ram above table pulling broach up Machines with multiple rams common
Surface	No handling of broach Multiple slides
Horizontal	**Short Cycle Times**
Pull	Longer strokes and broaches Basically vertical machines laid on side
Surface	Broaches stationary, work moves on conveyor Work held in fixtures
Continuous	Conveyor chain holds fixtures
Rotary	Rotary broach stationary, work translates beneath tool Work held in fixtures

Most broaching machines are driven hydraulically, although mechanical drive is used in a few special types. The major classification relates to whether the motion of the broach is vertical or horizontal, as given in Table 27-1.

The choice between vertical and horizontal machines is determined primarily by the length of the stroke required and the available floor space. Vertical machines seldom have strokes greater than 60 in. because of height limitations. Horizontal machines can have almost any length of stroke, but they require greater floor space. The most common machine is the vertical pull-down machine shown in Figure 27-11. The worktable, usually having a spherical-seated workholder, sits below the broach elevator, with a pulling mechanism below the table. When the elevator raises the broach above the table, the work can be placed into position. The elevator then lowers the pilot end of the broach through the hole in the workpiece, where it is engaged by the puller. The elevator then releases the upper end of the broach, and it is pulled through the workpiece. The workpieces are removed from the table, and the broach is raised upward to be engaged by the elevator mechanism. In some machines with two rams, one broach is being pulled down while the work is being unloaded and the broach raised at the other station. In Figure 27-11, the part is being broached in two passes, first on the left, then on the right.

■ 27.6 INTRODUCTION TO SAWING

Sawing is a basic machining process in which chips are produced by a succession of small cutting edges, or *teeth*, arranged in a narrow line on a saw "blade." As shown in Figure 27-12, each tooth forms a chip progressively as it passes through the workpiece. The chips are contained within the spaces between successive teeth until the teeth pass from the work. Because sections of considerable size can be severed from the workpiece with the removal of only a small amount of the material in the form of chips, sawing is probably the most economical of the basic machining processes with respect to the waste of material and power consumption, and in many cases with respect to labor.

In recent years vast improvements have been made in saw blades (design and materials) and sawing machines, resulting in improved accuracy and precision of the process. Most sawing is done to sever bar stock and shapes into desired lengths for use in other operations. There are many cases in which sawing is used to produce desired shapes. Frequently, and especially for producing only a few parts, contour sawing may be more economical than any other machining process.

SAW BLADES

Saw blades are made in three basic configurations. The first type, commonly called a *hacksaw* blade, is straight, relatively rigid, and of limited length, with teeth on one edge.

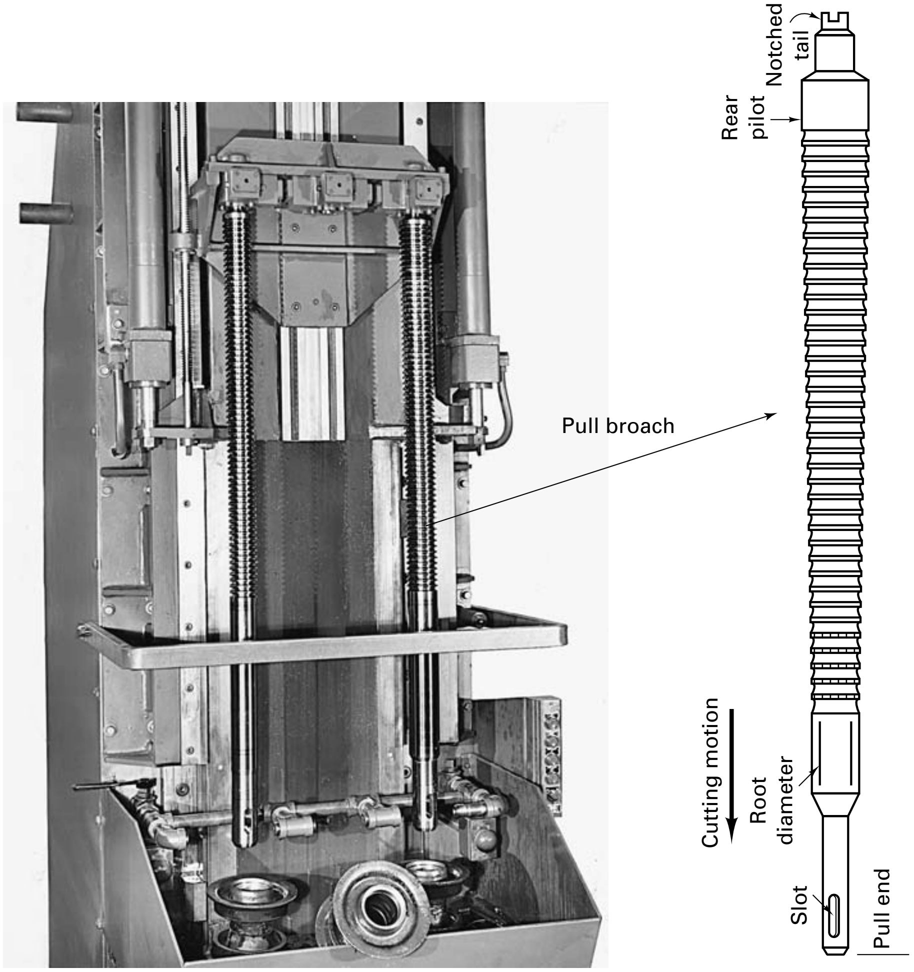

FIGURE 27-11 Vertical pull-down broaching machine shown with parts in position ready for the two broaches to be inserted. An extra part is shown lying at the front of the machine.

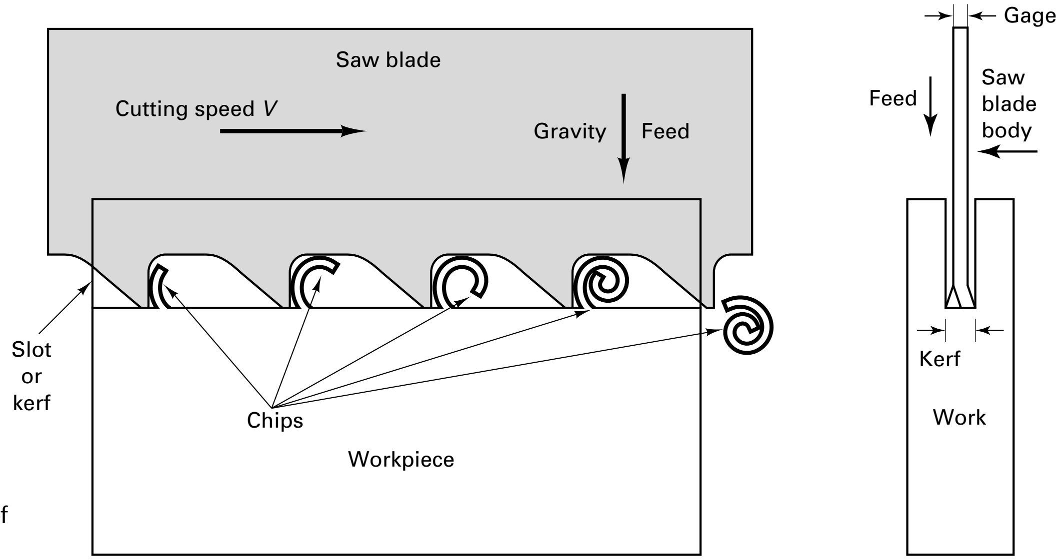

FIGURE 27-12 Formation of chips in sawing.

The second type, called a *bandsaw*, is sufficiently flexible that a long length can be formed into a continuous band with teeth on one edge. The third form is a rigid disk having teeth on the periphery; these are called *circular saws* or *cold saws*. Figure 27-13 gives the standard nomenclature for a saw blade.

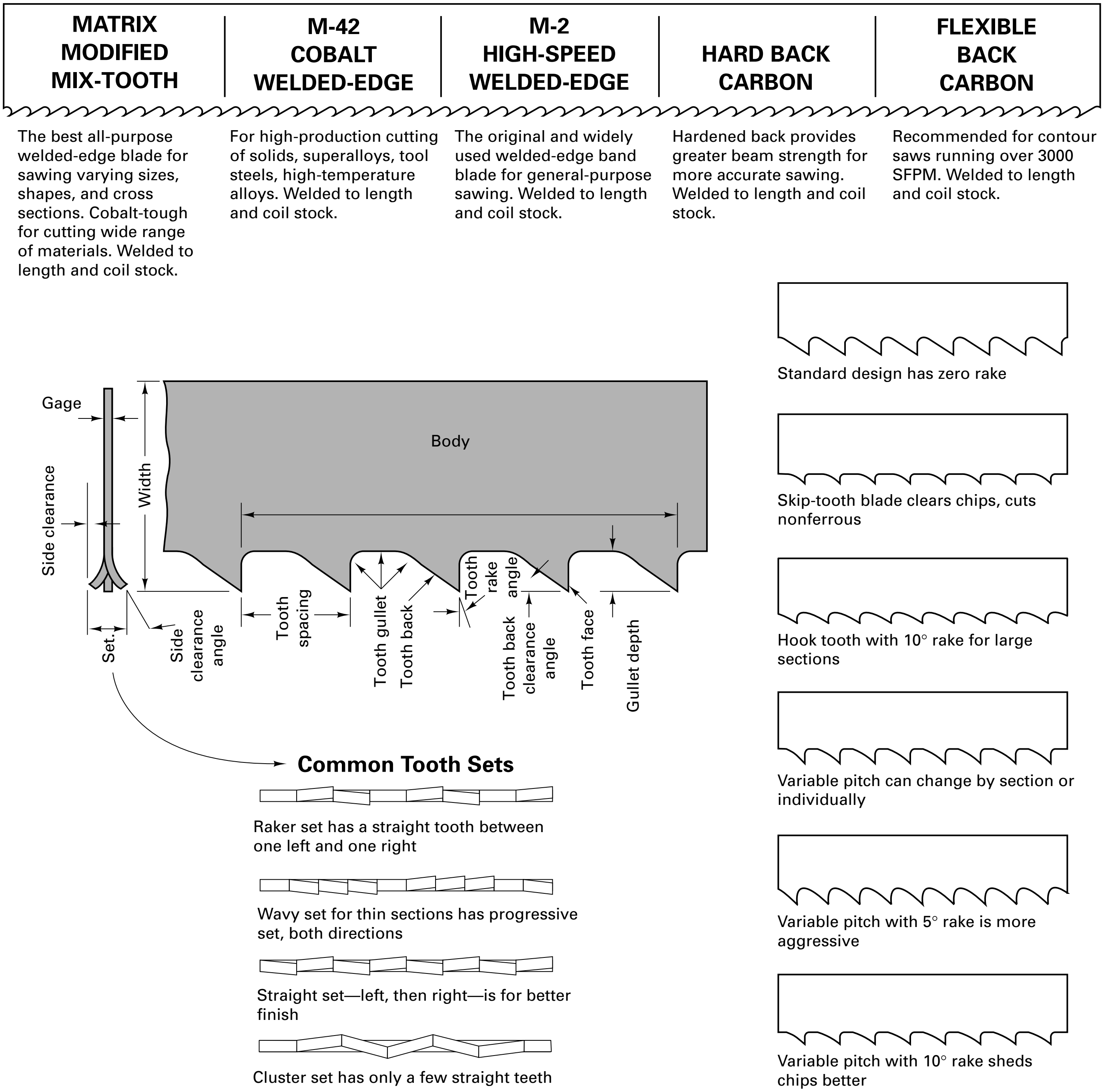

The best all-purpose welded-edge blade for sawing varying sizes, shapes, and cross sections. Cobalt-tough for cutting wide range of materials. Welded to length and coil stock.

For high-production cutting of solids, superalloys, tool steels, high-temperature alloys. Welded to length and coil stock.

The original and widely used welded-edge band blade for general-purpose sawing. Welded to length and coil stock.

Hardened back provides greater beam strength for more accurate sawing. Welded to length and coil stock.

Recommended for contour saws running over 3000 SFPM. Welded to length and coil stock.

Raker set has a straight tooth between one left and one right

Wavy set for thin sections has progressive set, both directions

Straight set—left, then right—is for better finish

Cluster set has only a few straight teeth

Standard design has zero rake

Skip-tooth blade clears chips, cuts nonferrous

Hook tooth with 10° rake for large sections

Variable pitch can change by section or individually

Variable pitch with 5° rake is more aggressive

Variable pitch with 10° rake sheds chips better

FIGURE 27-13 Bandsaw blade designs and nomenclature (above). Tooth set patterns (left) and tooth designs (right).

All saw blades have certain common and basic features: (1) material, (2) tooth form, (3) tooth spacing, (4) tooth set, and (5) blade thickness or gage. Small hacksaw blades are usually made entirely of tungsten or molybdenum high-speed steel. Blades for power-operated hacksaws are often made with teeth cut from a strip of high-speed steel that has been electron-beam-welded to the heavy main portion of the blade, which is made from a tougher and cheaper alloy steel (see Figure 27-13). Bandsaw blades are frequently made with this same type of construction but with the main portion of the blade made of relatively thin, high-tensile-strength alloy steel to provide the required flexibility. Bandsaw blades are also available with tungsten carbide teeth and TiN coatings. The three most common *tooth forms* are regular, skip tooth, and hook. *Tooth spacing* is very important in all sawing because it determines three factors. First, it controls the size of the teeth. From the viewpoint of strength, large teeth are desirable. Second, tooth spacing determines the space (*gullet*) available to contain the chip that is formed. The chip cannot drop from this space until it emerges from the slot cut in the workpiece, called the *kerf*. *Tooth set* refers to the manner in which the teeth are offset from the centerline in order to make the kerf wider than the gage (the thickness of the back) of the blade. This allows the saw to move more freely in the kerf, reducing rubbing, friction, and heating. The kerf–gullet space must be such that there is no crowding of the chip. Chips should not become wedged between the teeth and not drop out of the gullet when the saw emerges from the cut.

Third, tooth spacing determines how many teeth will bear against the work. This is very important in cutting thin material, such as tubing. At least two teeth should be in contact with the work at all times. If the teeth are too coarse, only one tooth rests on the work at a given time, permitting the saw to rock, and the teeth may be stripped from the saw.

Hand hacksaw blades have 14 to 32 teeth per inch. In order to make it easier to start a cut, some hand hacksaw blades are made with a short section at the forward end having teeth of a special form with negative rake angles. Tooth spacing for power hacksaw blades ranges from 4 to 18 teeth per inch.

Raker-tooth saws are used in cutting most steel and iron. *Straight-set teeth* are used for sawing brass, copper, and plastics. Saws with *wave-set teeth* are used primarily for cutting thin sheets and thin-walled tubing.

The gage or *blade thickness* of nearly all hand hacksaw blades is 0.025 in. Saw blades for power hacksaws vary in thickness from 0.050 to 0.100 in. Hand hacksaw blades come in two standard lengths, 10 and 12 in. All are $^1/_2$ in. wide. Blades for power hacksaws vary in length from 12 to 24 in. and in width from 1 to 2 in. Wider and thicker blades are desirable for heavy-duty work. As a general rule, in hacksawing the blade should be at least twice as long as the maximum length of cut that is to be made.

Bandsaw blades are available in straight, raker, wave, or combination sets. In order to reduce the noise from high-speed bandsawing, it is becoming increasingly common to use blades that have more than one pitch, size of teeth, and type of set. Blade width is very important in bandsawing because it determines the minimum radius that can be cut. The most common widths are from $^1/_{16}$ in. to $^1/_2$ in., although wider blades can be obtained. Because wider blades are stronger, select the widest blade possible. However, cutting small radii requires a narrower and weaker blade. Bandsaw blades come in tooth spacings from 2 to 32 teeth per inch.

Circular saws for cutting metal are often called *cold saws* to distinguish them from friction-type disk saws. Friction saws do not make chips but rather heat the metal to the melting temperature at the point of metal removal. Cold saws cut rapidly and produce chips like a milling cutter while producing surfaces that are comparable in smoothness and accuracy with surfaces made by slitting saws in a milling machine or by a cutoff tool in a lathe.

Disk or *circular saws* necessarily differ somewhat from straight-blade forms. The sizes up to about 18 in. in diameter have an integral-tooth design with teeth cut directly into the disk (Figure 27-14). Larger saws use either *segmented* or *inserted* teeth. The teeth are made of high-speed steel or tungsten carbide. The remainder of the disk is made of ordinary, less expensive, and tougher steel. *Segmental* blades are composed of segments mounted around the periphery of the disk, usually fitted with a tongue and groove and fastened by means of screws or rivets. Each segment contains several teeth. If a single tooth is broken, only one segment needs be replaced to restore the saw to an operating condition.

As shown in Figure 27-14, circular saw teeth are usually *beveled*. A common tooth form has every other tooth beveled on both sides; that is, the first tooth is beveled on the left side, the second tooth on both sides, the third tooth on the right side, the fourth tooth on the left side, and so forth. Another method is to bevel the opposite sides of successive teeth. Beveling is done to produce a smoother cut. Precision circular saws made from carbide, which are becoming available, are very thin (0.03 in.) and have high cutting-off accuracy, around ±0.00008 in., with negligible burrs.

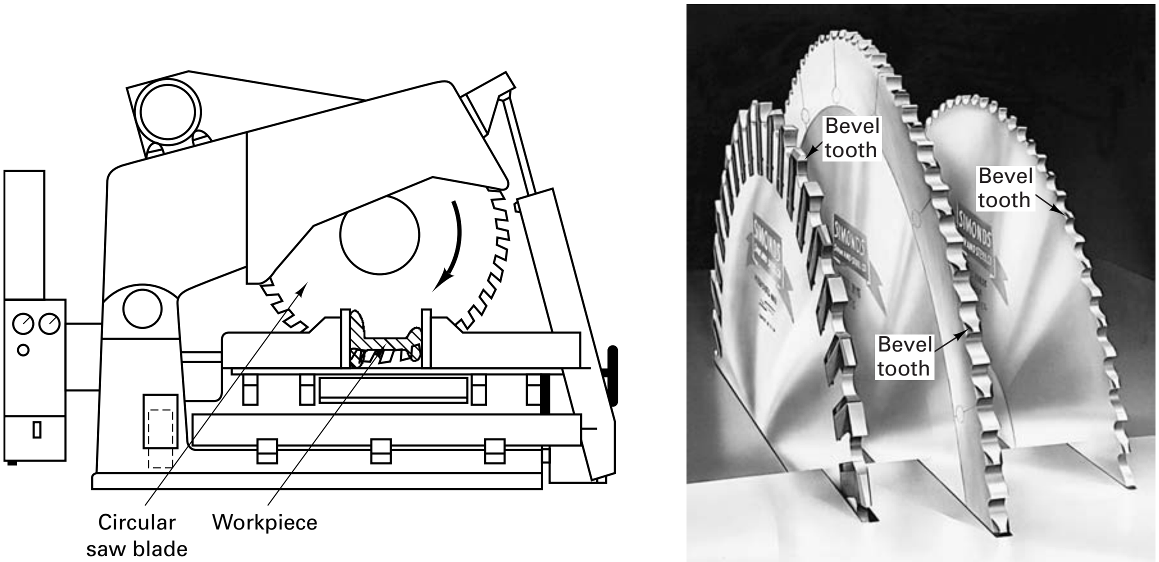

FIGURE 27-14 Circular sawing a structural shape, using (*left* to *right*) an insert tooth, a segmental tooth, and an integral-tooth circular saw blade.

TYPES OF SAWING MACHINES

Metal-sawing machines may be classified as follows:

1. Reciprocating saw
   - **a.** Manual hacksaw
   - **b.** Power hacksaw (Figure 27-15)
   - **c.** Abrasive disc
2. Bandsaw
   - **a.** Vertical cutoff (Figure 27-16)
   - **b.** Horizontal cutoff (Figure 27-17)
   - **c.** Combination cutoff and contour (Figure 27-18)
   - **d.** Friction
3. Circular saw (Figure 27-14)
   - **a.** Cold saw
   - **b.** Steel friction disk

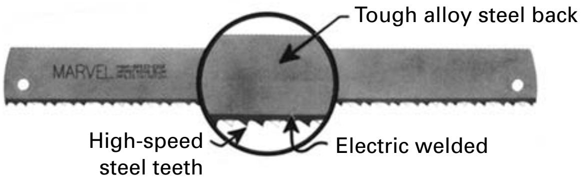

FIGURE 27-15 Power hacksaw blade (above) and hacksaw with automatic bar feeding (right) cutting two pieces of round stock.

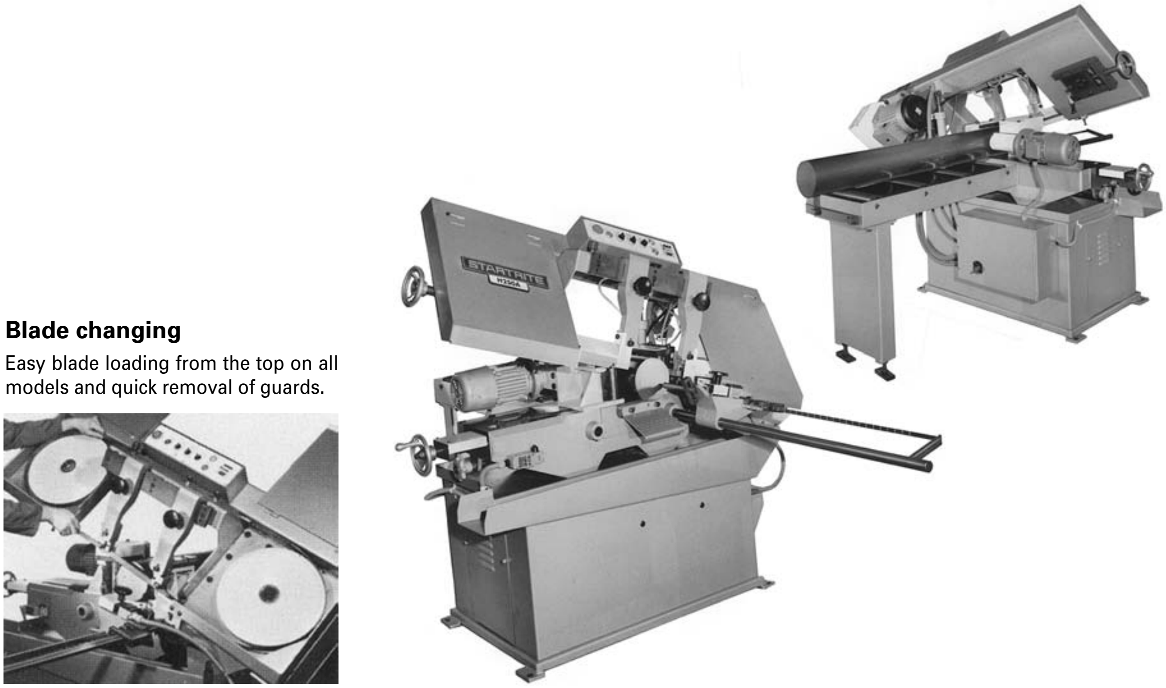

FIGURE 27-16 Front view and rear view of a horizontal bandsawing machine sawing a cylinder of steel. Inset shows blade-changing operation.

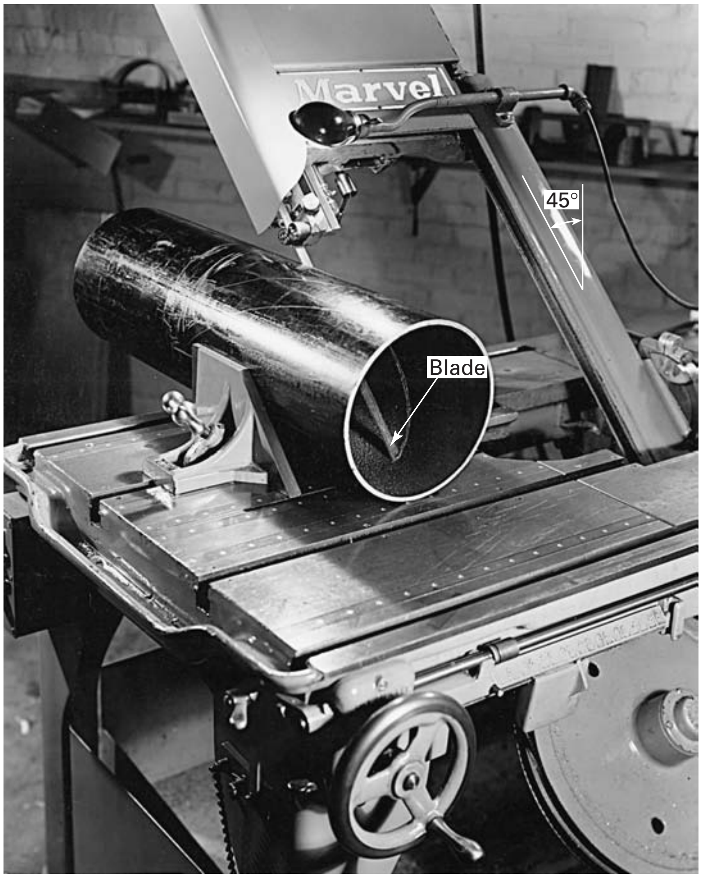

FIGURE 27-17 Vertical bandsaw cutting a piece of pipe, showing head tilted 45°.

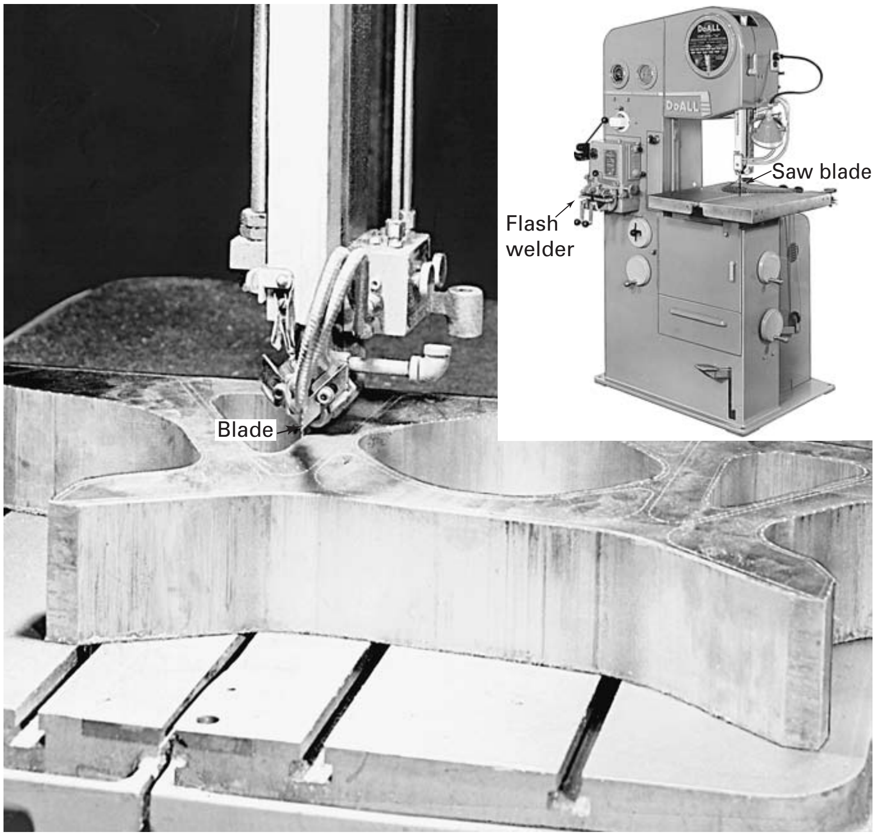

FIGURE 27-18 Contour bandsawing on vertical bandsawing machine, shown in inset.

POWER HACKSAWS

As the name implies, power hacksaws are machines that mechanically reciprocate a large hacksaw blade (Figure 27-15). These machines consist of a bed, a workholding frame, a power mechanism for *reciprocating* the saw frame, and some type of feeding mechanism. Because of the inherent inefficiency of cutting in only one stroke direction, they have often been replaced by more efficient, horizontal bandsawing machines.

BANDSAWING MACHINES

The earliest metalcutting bandsawing machines were direct adaptations from woodcutting bandsaws. Modern machines of this type are much more sophisticated and versatile and have been developed specifically for metal cutting. To a large degree they were made possible by the development of vastly better and more flexible bandsaw blades and simple flash-welding equipment, which can weld the two ends of a strip of bandsaw blade together to form a band of any desired length. Three basic types of bandsawing machines are in common use.

Horizontal metalcutting bandsawing machines were developed to combine the flexibility of reciprocating power hacksaws and the continuous cutting action of vertical bandsaws. These heavy-duty automatic bandsaws feed the saw vertically by a hydraulic mechanism and have automatic stock feed that can be set to feed the stock laterally any desired distance after a cut is completed and automatically clamp it for the next cut. Such machines can be arranged to hold, clamp, and cut several bars of material simultaneously. Computer numerical control (CNC) bandsaws are available with automatic storage and retrieval systems for the bar stock. Smaller and less expensive types have swing-frame construction, with the bandsaw head mounted in a pivot on the rear of the machine. Feed is accomplished by gravity through rotation of the head about the pivot point. Because of their continuous cutting action, horizontal bandsawing machines are very efficient (Figure 27-16).

Upright, *cutoff*, *bandsawing machines* (Figure 27-17) are designed primarily for cutoff work on single stationary workpieces that can be held on a table. On many machines the blade mechanism can be tilted to about 45°, as shown, to permit cutting at an angle. They usually have automatic power feed of the blade into the work, automatic stops, and provision for supplying coolant.

Combination cutoff and contour bandsawing machines (Figure 27-18) can be used not only for cutoff work but also for contour sawing. They are widely used for cutting irregular shapes in connection with making dies and the production of small numbers of parts and are often equipped with rotary tables. Additional features on these machines include a table that pivots so that it can be tilted to any angle up to 45°. Usually these machines have a small flash butt welder on the vertical column, so that a straight length of bandsaw blade can be welded quickly into a continuous band. A small grinding wheel is located beneath the welder so that the flash can be ground from the weld to provide a smooth joint that will pass through the saw guides. This welding and grinding unit makes it possible to cut internal openings in a part by first drilling a hole, inserting one end of the saw blade through the hole, and then butt welding the two ends together. When the cut is finished, the band is again cut apart and removed from the opening. The cutting speed of the saw blade can be varied continuously over a wide range to provide correct operating conditions for any material. A method of power feeding the work is provided, sometimes gravity-actuated.

Contour-sawing machines are made in a wide range of sizes, the principal size dimension being the throat depth. Sizes from 12 to 72 in. are available. The speeds available on most machines range from about 50 to 2000 ft/min. Modern horizontal bandsaws are accurate to ±0.002 in. per vertical inch of cut but have feeding accuracy of only ±0.005 in., subject to the size of the stock and the feed rate. Repeatability from one feed to the next may be ±0.010 to ±0.020 in.

CNC-controlled sawing centers with microprocessor controls have opened up new automation aspects for sawing. Such control systems can improve accuracy to within ±0.005 in. over entire cuts by controlling saw speed, blade feed pressure, and feed rate.

Special bandsawing machines are available with very high speed ranges, up to 14,000 ft/min. These are known as *friction bandsawing machines*. Material is not cut by chip formation. Instead, the friction between the rapidly moving saw blade and the work is sufficient to raise the temperature of the material at the end of the kerf to or just below the melting point, where its strength is very low. The saw blade then pulls the molten, or weakened, material out of the kerf. Consequently, the blades do not need to be sharp; they frequently have no teeth—only occasional notches in the blade to aid in removing the metal.

Almost any material, including ceramics, can be cut by friction sawing. Because only a small portion of the blade is in contact with the work for an instant and then is cooled by its passage through the air, it remains cool. Usually, the major portion of the work, away from contact with the saw blade, also remains quite cool. The metal adjacent to the kerf is heat affected, recast, and sometimes harder than the bulk metal. It is also a very rapid method for trimming the flash from sheet metal parts, castings, and forgings.

CUTTING FLUIDS

Cutting fluids should be used for all bandsawing, with the exception that cast iron is always cut dry. Commercially available oils or light cutting oils will give good results in cutting ferrous materials. Beeswax or paraffin are common lubricants for cutting aluminum and aluminum alloys.

FEEDS AND SPEEDS

Because of the many different types of feed involved in bandsawing, it is not practical to provide tabular feed or pressure data. Under general conditions, however, an even pressure, without forcing the work, gives best results. A nicely curled chip usually indicates an ideal feed pressure. Burned or discolored chips indicate excessive pressure, which can cause tooth breakage and premature wear.

Most bandsaws provide recommended cutting speed information right on the machine, depending upon the material being sawed. In general, HSS blades are run at 200 to 300 ft/min when cutting 1-in.-thick, low- and medium-carbon steels. For high-carbon steels, alloy steels, and tool and die steels, the range is from 150 to 225 ft/min, and most stainless steels are cut at 100 to 125 ft/min.

CIRCULAR-BLADE SAWING MACHINES

Machines employing rotating circular or cold saw blades are used exclusively for cutoff work. These range from small, simple types, in which the saw is fed manually, to very large saws having power feed and built-in coolant systems, commonly used for cutting off hot-rolled shapes as they come from a rolling mill. In some cases friction saws are used for this purpose, having disks up to 6 ft in diameter and operating at surface speeds up to 25,000 ft/min. Steel sections up to 24 in. can be cut in less than 1 minute by this technique.

Although technically not a sawing operation, cutoff work up to about 6 in. is often done utilizing thin *abrasive* disks. The equipment used is the same as for sawing. It has the advantage that very hard materials that would be very difficult to saw can be cut readily. A thin rubber- or resinoid-bonded abrasive wheel is used. Usually a somewhat smoother surface is produced.

27.7 INTRODUCTION TO FILING

Basically, the metal-removing action in filing is the same as in sawing, in that chips are removed by cutting teeth that are arranged in succession along the same plane on the surface of a tool, called a *file*. There are two differences: (1) the chips are very small, and therefore the cutting action is slow and easily controlled, and (2) the cutting teeth are much wider. Consequently, fine and accurate work can be done.

Files are classified according to the following:

1. The type, or *cut*, of the teeth
2. The degree of coarseness of the teeth
3. Construction
   a. Single solid units for hand use or in die-filing machines
   b. Band segments, for use in band-filing machines
   c. Disks, for use in disk-filing machines

Four types of *cuts* are available. *Single-cut files* have rows of parallel teeth that extend across the entire width of the file at the angle of from 65° to 85°. *Double-cut files* have two series of parallel teeth that extend across the width of the file. One series is cut at an angle of 40° to 45°. The other series is coarser and is cut at an opposite angle that varies from about 10° to 80°. A *vixen-cut file* has a series of parallel curved teeth, each extending across the file face. On a *rasp-cut* file, each tooth is short and is raised out of the surface by means of a punch. These four types of cuts are shown in Figure 27-19.

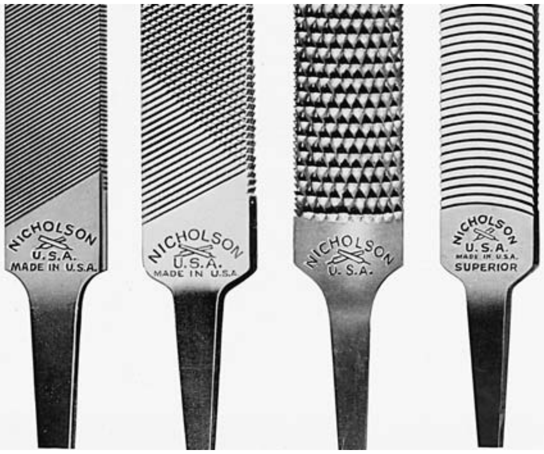

FIGURE 27-19 Four types of teeth (cuts) used in files. Left to right: Single, double, rasp, and curved (vixen). *(Courtesy of Nicholson File Company.)*

The coarseness of files is designated by the following terms, arranged in order of increasing coarseness: *dead smooth*, *smooth*, *second cut*, *bastard*, *coarse*, and *rough*. There is also a series of finer Swiss pattern files, designated by numbers from 00 to 8.

Files are available in a number of cross-sectional shapes: *flat*, *round*, *square*, *triangular*, and *half-round*. Flat files can be obtained with no teeth on one or both narrow edges, known as *safe edges*. Safe edges prevent material from being removed from a surface that is normal to the one being filed. Most files for hand filing are from 10 to 14 in. in length and have a pointed *tang* at one end on which a wood or metal handle can be fitted for easy grasping.

FILING MACHINES

An experienced operator can do very accurate work by hand filing, but it can be a difficult task. Therefore, three types of filing machines have been developed that permit quite accurate results to be obtained rapidly and with much less effort. *Die-filing machines* hold and reciprocate a file that extends upward through the worktable. The file rides against a roller guide at its upper end, and cutting occurs on the downward stroke; therefore, the cutting force tends to hold the work against the table. The table can be tilted to any desired angle. Such machines operate at from 300 to 500 strokes per minute, and the resulting surface tends to be at a uniform angle with respect to the table. Quite accurate work can be done. Because of the reciprocating action, approximately 50% of the operating time is nonproductive.

Band-filing machines provide continuous cutting action. Most band filing is done on contour bandsawing machines by means of a special band file that is substituted for the usual bandsaw blade. The principle of a band file is shown in Figure 27-20. Rigid, straight file segments, about 3 in. long, are riveted to a flexible steel band near their leading ends. One end of the steel band contains a slot that can be hooked over a pin in the other end to form a continuous band. As the band passes over the drive and idler wheels of the machine, it flexes so that the ends of adjacent file segments move apart. When the band becomes straight, the ends of adjacent segments move together and interlock to form a continuous straight file. Where the file passes through the worktable, it is guided and supported by a grooved guide, which provides the necessary support to

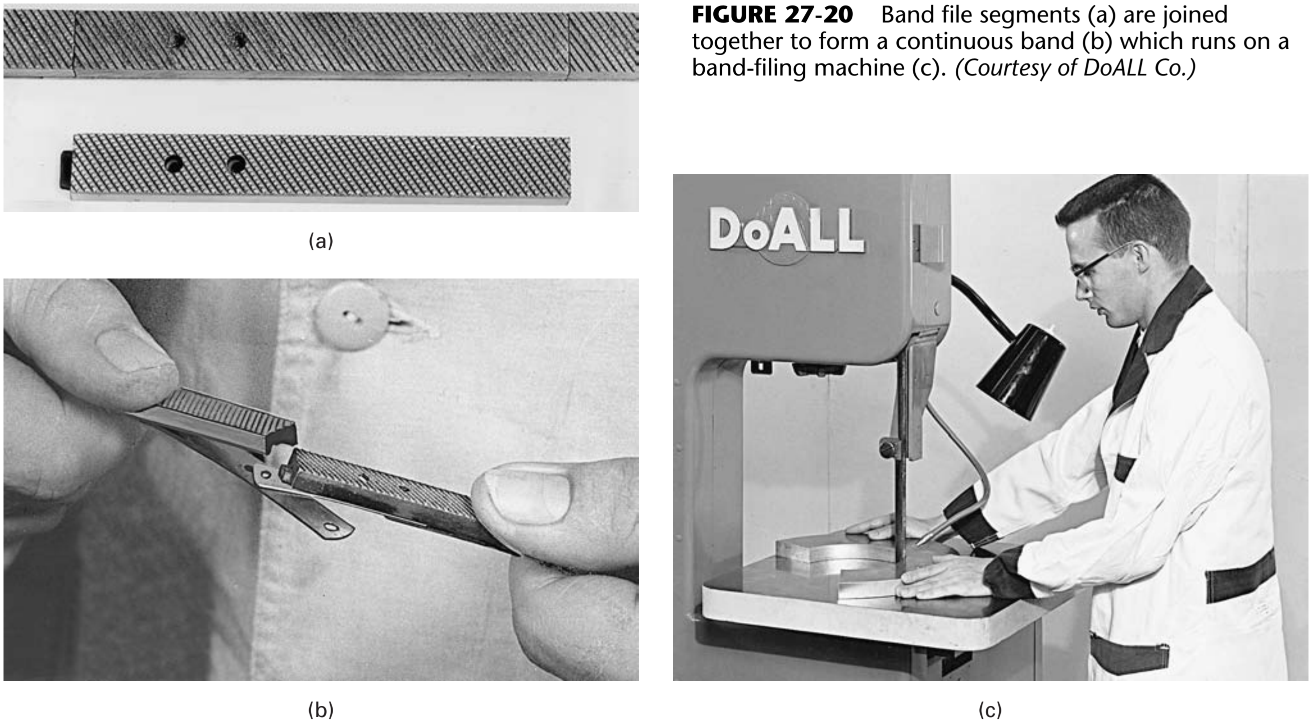

FIGURE 27-20 Band file segments (a) are joined together to form a continuous band (b) which runs on a band-filing machine (c). *(Courtesy of DoALL Co.)*

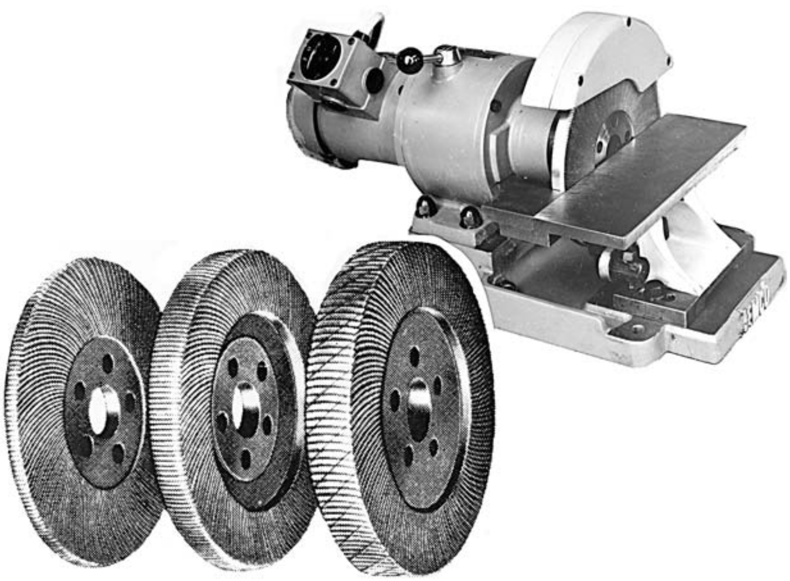

FIGURE 27-21 Disk-type filing machine and some of the available types of disk files. *(Courtesy of Jersey Manufacturing Company.)*

resist the pressure of the work against the file. Band files are available in most of the standard cuts and in several widths and shapes. Operating speeds range from about 50 to 250 ft/min.

Although band filing is considerably more rapid than can be done on a die-filing machine, it usually is not quite as accurate. Frequently, band filing may be followed by some finish filing on a die-filing machine.

Some *disk-filing machines* have files in the form of disks (Figure 27-21). These are even simpler than die-filing machines and provide continuous cutting action. However, it is difficult to obtain accurate results by their use.

■ Key Words

band-filing machine
bandsaw
broach
broaching
burnishing teeth
circular saw
cold saw
filing
hacksaw
kerf
planning
pull broach
push broach
reciprocating saw
rise per tooth
sawing
shaping
surface broach
tooth set

■ Review Questions

1. What is unique about the broaching process compared to the other basic machining processes?
2. Can a thick saw blade be used as a broach? Why or why not?
3. Broaching machines are simpler in a basic design than most other machine tools. Why is this?
4. Why is broaching particularly well suited for mass production?
5. In designing a broach, what would be the first thing you have to calculate?
6. Why is it necessary to relate the design of a broach to the specific workpiece that is to be machined?
7. What two methods can be utilized to reduce the force and power requirements for a particular broaching cut?
8. For a given job, how would a broach having rotor-tooth design compare in length with one having regular, full-width teeth?
9. Why are the pitch and radius of the gullet between teeth on a broach of importance?
10. Why are broaching speeds usually relatively low, as compared with other machining operations?
11. What are the advantages of shell-type broach construction?
12. Why are most broaches made from alloy or high-speed steel rather than from tungsten carbide?
13. What are the advantages of TiN-coated broaching tools?
14. For mass-production operations, which process is preferred, pull-up broaching or pull-down broaching?
15. What is the difference between the roughing teeth and the finishing teeth in a typical pull broach?
16. The sides of a square, blind hole must be machined all the way to the bottom (who designed this part?). The hole is first drilled to full depth, then the bottom is milled flat. Is it possible to machine the hole square by broaching? Why or why not?

17. The interior, flat surfaces of socket wrenches, which have one "closed" end, often are finished to size by broaching. By examining one of these, determine what design modification was incorporated to make broaching possible.
18. Why is sawing one of the most efficient of the chip-forming processes?
19. Explain why tooth spacing (pitch) is important in sawing.
20. What is the tooth gullet used for on a saw blade?
21. Explain what is meant by the "set" of the teeth on a saw blade.
22. How is tooth set related to saw kerf?
23. Why can a bandsaw blade not be hardened throughout the entire width of the band?
24. What are the advantages of using circular saws?
25. Why have bandsawing machines largely replaced reciprocating saws?
26. Explain how the hole in Figure 27-18 is made on a contour bandsawing machine.
27. How would you calculate or estimate T_m for a horizontal bandsaw cutting a 3-in. round of 1040 steel?
28. What is the disadvantage of using gravity to feed a saw in cutting round bar stock?
29. To what extent is filing different from sawing?
30. What is a safe edge on a file?
31. Why is an end-filing machine more efficient than a die-filing machine?
32. How does a rasp-cut file differ from other types of files?
33. How does the process of shaping differ from planing?
34. How is feed per stroke in shaping related to feed per tooth in milling?
35. What are some ways to improve the efficiency of a planer? Do any of these apply to the shaper?

Problems

1. A surface 12 in. long is to be machined with a flat, solid broach that has a rise per tooth of 0.0047 in. What is the minimum cross-sectional area that must be provided in the chip gullet between adjacent teeth?
2. The pitch of the teeth on a simple surface broach can be determined by equation 27-1. If a broach is to remove 0.25 in. of material from a gray iron casting that is 3 in. wide and 17.75 in. long, and if each tooth has a rise per tooth of .004 in., what will be the length of the roughing section of the broach?
3. Estimate the (approximate maximum) horsepower needed to accomplish the operation described in Problem 2 at a cutting speed of 10 m/min. (*Hint:* First find the HP used per tooth and determine the maximum number of teeth engaged at any time. What are those units?)
4. Estimate the approximate force acting in the forward direction during cutting for the conditions stated in Problems 2 and 3.
5. In cutting a 6-in.-long slot in a piece of AISI 1020 cold-rolled steel that is 1 in. thick, the material is fed to a bandsaw blade with teeth having a pitch of 1.27 mm (20 pitch) at the rate of 0.0001 in. per tooth. Estimate the cutting time for the cut.
6. The strength of a pull broach is determined by its minimum cross section, which usually occurs either at the root of the first tooth or at the pull end. Suppose the minimum root diameter is D_r, the pull end diameter is D_p and the width of the pull slot is W. Write an equation for the allowable pull, in psi, using 200,000 as the yield strength for the broach material.
7. Suppose you want to shape a block of metal 7 in. wide and 4 in. long ($L = 4$ in.) using a shaper as set up in Figure 27-1. You have determined for this metal that the cutting speed should be 25 sfpm, the depth of cut needed here for roughing is 0.25 in., and the feed will be 0.1 in. per stroke. Determine the approximate crank rpm and then estimate the cutting time and the MRR.
8. Could you have saved any time in Problem 7 by cutting the block in the 7-in. direction? Redo with $L = 7$ and $W = 4$ in.
9. Derive the equation for shaping cutting speed, equation 27-6.
10. How many strokes per minute would be required to obtain a cutting speed of 36.6 m (120 ft) per minute on a typical mechanical drive shaper if a 254-mm (10-in.) stroke is used?
11. How much time would be required to shape a flat surface 254 mm (1 in.) wide and 203 mm (8 in.) long on a hydraulic drive shaper, using a cutting speed of 45.7 m (150 ft) per minute, a feed of 0.51 mm (0.020 in.) per stroke, and an overrun of 12.7 mm $^{1}/_{2}$ in.) at each end of the cut?
12. What is the metal removal rate in Problem 11 if the depth of cut is 6.35 mm ($^{1}/_{4}$ in.)?
13. Suppose you decide to mill the flat surface described in Problems 11 and 12. The work will be done on a vertical milling machine using a 1.25-in.-diameter end mill (four teeth) (HSS) cutting at 150 sfpm with a feed per tooth of 0.005 in. per tooth cutting at $d = 0.25$ in. Compare the milling time and MRR to that of shaping.
14. A planer has a 10-hp motor, and 75% of the motor output is available at the cutting tool. The specific power for cutting cast iron metal is 0.03 W/mm^3, or 0.67 hp/in.^{3}/ min. What is the maximum depth of cut that can be taken in shaping a surface in this material if the surface is 305 × 305 mm (12 × 12), the feed is 0.25 in. per stroke, and the cutting speed is 54.9 mm (180 ft) per minute?
15. Calculate the T_m for planing the block of cast iron in Problem 14 and then estimate T_m for milling the same surface. You will have to determine which milling process to use and select speeds and feeds for an HSS cutter.

www.wiley.com/college/degarmo

Chapter 27 CASE STUDY

Cost Estimating—Planing vs. Milling

KC Kendoric works in the BRC factory as a manufacturing engineer. There are two machine tools available for a job the company is bidding on. One is a 48 × 48 X 10 double housing planer that originally costs $80,000, is depreciated over a 20-year period, and is operated about 6,000 hr/yr. The charge for the use of the machine is $2.50/hr. and labor and overhead in addition are charged at $20.00/hr. The other machine is a large vertical spindle CNC milling machine that costs $165,000 new, depreciated over a 20-year time period also. The charge for the use of the CNC milling machine is $6.00/hr., and labor and overhead in addition are charged at $32.00/hr. To machine the workpiece under consideration takes 10 hours on the planer and 5 hours on the CNC milling machine. The cutting tools consumed cost $5.00/piece for the planer and $31.00/piece for the mill.

Purchasing has not issued an order (quantity not yet decided) so KC needs to determine the BEQ so she knows which machine to use when the order is placed.

CHAPTER 28

ABRASIVE MACHINING PROCESSES

28.1 INTRODUCTION

Abrasive machining is a material removal process that involves the interaction of abrasive grits with the workpiece at high cutting speeds and shallow penetration depths. The chips that are formed resemble those formed by other machining processes. Unquestionably, abrasive machining is the oldest of the basic machining processes. Museums abound with examples of utensils, tools, and weapons that ancient peoples produced by rubbing hard stones against softer materials to abrade away unwanted portions, leaving desired shapes. For centuries, only natural abrasives were available for grinding, while other more modern basic machining processes were developed using superior cutting materials. However, the development of manufactured abrasives and a better fundamental understanding of the abrasive machining process have resulted in placing abrasive machining and its variations among the most important of all the basic machining processes.

The results that can be obtained by abrasive machining range from the finest and smoothest surfaces produced by any machining process, in which very little material is removed, to rough, coarse surfaces that accompany high material removal rates. The abrasive particles may be (1) free; (2) mounted in resin on a belt (called *coated product*); or, most commonly (3) close packed into wheels or stones, with abrasive grits held together by bonding material (called *bonded product* or a grinding wheel). Figure 28-1 shows a surface grinding process using a grinding wheel. The depth of cut *d* is determined by the infeed and is usually very small, 0.002 to 0.005 in., so the arc of contact (and the chips) is small. The table reciprocates back and forth beneath the rotating wheel. The work feeds into the wheel in the cross-feed direction. After the work is clear of the wheel, the wheel is lowered and another pass is made, again removing a couple of thousandths of inches of metal. The metal removal process is basically the same in all abrasive machining processes but with important differences due to spacing of active grains (grains in contact with work) and the rigidity and degree of fixation of the grains. Table 28-1 summarizes the primary abrasive processes. The term *abrasive machining* applied to one particular form of the grinding process is unfortunate, because all these process are machining with abrasives.

Compared to machining, abrasive machining processes have three unique characteristics. First, each cutting edge is very small, and many of these edges can cut simultaneously. When suitable machine tools are employed, very fine cuts are possible, and fine surfaces and close dimensional control can be obtained. Second, because extremely

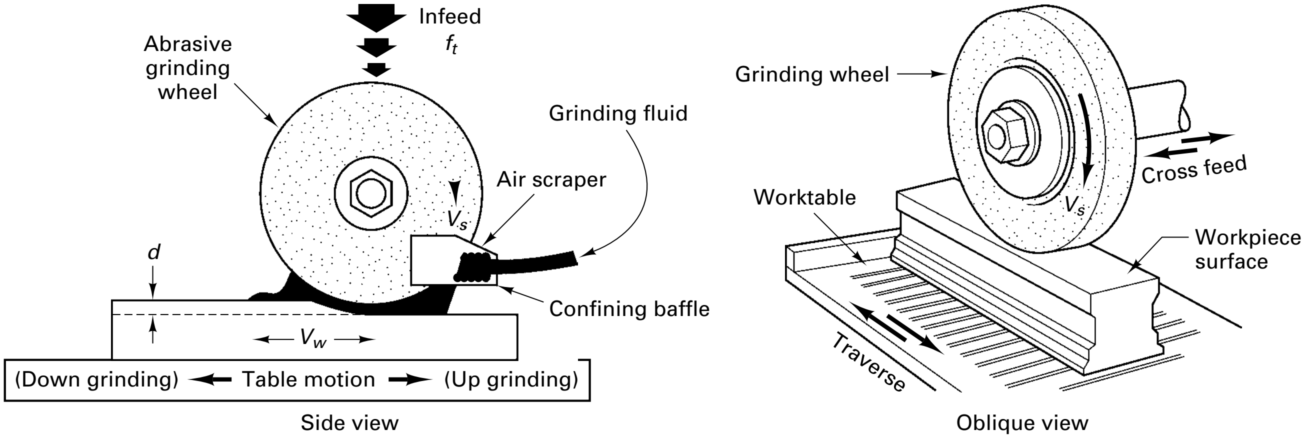

FIGURE 28-1 Schematic of surface grinding, showing infeed and cross feed motions along with cutting speeds V_S, and workpiece velocity V_W.

hard abrasive grits, including diamonds, are employed as cutting tool materials, very hard materials, such as hardened steel, glass, carbides, and ceramics, can readily be machined. As a result, the abrasive machining processes are not only important as manufacturing processes, they are indeed essential. Many of our modern products, such as modern machine tools, automobiles, space vehicles, and aircraft, could not be manufactured without these processes. Third, in grinding, you have no control over the actual tool geometry (rake angles, cutting edge radius) or all the cutting parameters (depth of cut). As a result of these parameters and variables, grinding is a complex process.

To get a handle on the complexity, Table 28-2 presents the primary grinding parameters, grouped by their independence or dependence. Independent variables are those that are controllable (by the machine operator) while the dependent variables are the resultant effects of those inputs. Not listed in the table is workpiece hardness, which has a significant effect on all the resulting effects. Workpiece hardness will be an input factor but it is not usually controllable.

28.2 ABRASIVES

An *abrasive* is a hard material that can cut or abrade other substances. Natural abrasives have existed from the earliest times. For example, sandstone was used by ancient peoples to sharpen tools and weapons. Early grinding wheels were cut from slabs of sandstone, but because they were not uniform in structure throughout, they wore unevenly and did not produce consistent results. *Emery*, a mixture of alumina (Al_2O_3) and magnetite (Fe_3O_4), is another natural abrasive still in use today and is used on coated paper and cloth (emery paper). *Corundum* (natural Al_2O_3) and diamonds are other naturally occurring abrasive materials. Today, the only natural abrasives that have commercial

TABLE 28-1 Abrasive Machining Processes

Process	Particle Mounting	Features
Grinding	Bonded	Uses wheels, accurate sizing, finishing, low MRR; can be done at high speeds (over 12,000 sfpm)
Creep feed grinding	Bonded open, soft	Uses wheels with long cutting arc, very slow feed rate, and large depth of cut
Abrasive machining	Bonded	High MRR, to obtain desired shapes and approximate sizes
Snagging	Bonded belted	High MRR, rough rapid technique to clean up and deburr castings, forgings
Honing	Bonded	"Stones" containing fine abrasives; primarily a hole-finishing process
Lapping	Free	Fine particles embedded in soft metal or cloth; primarily a surface-finishing process
Abrasive waterjet	Free in jet	Water jets with velocities up to 3000 sfpm carry abrasive particles (silica and garnet).
Ultrasonic	Free in liquid	Vibrating tool impacts abrasives at high velocity
Abrasive flow	Free in gel	Abrasives in gel flow over surface-edge finishing
Abrasive jet	Free in	A focused jet of abrasives in an inert gas at high velocity

TABLE 28-2 Grinding Parameters*

Independent Parameters/Controllable	Dependent Variables/Resulting Effects
Grinding wheel selection	Forces per unit width of wheel
Abrasive type	Normal
Grain size	Tangential
Hardness grade	Surface finish
Openness of structure	Material removal rate (MRR)
Bonding media	Wheel wear (G, or grinding ratio)
Dressing of wheel	Thermal effects
Type of dressing tool	Wheel surface changes
Feed and depth of cut	Chemical effects
Sharpness of dressing tool	Horsepower
Machine settings	
Wheel speed	
Infeed rate (depth of cut)	
Cross-feed rate	
Workpiece speed	
Rigidity of setup	
Type and quality of machine	
Grinding fluid	
Type	
Cleanliness	
Method of application	

importance are quartz, sand, garnets, and diamonds. For example, *quartz* is used primarily in coated abrasives and in air blasting, but artificial abrasives are also making inroads in these applications. The development of artificial abrasives having known uniform properties has permitted abrasive processes to become precision manufacturing processes.

Hardness, the ability to resist penetration, is the key property for an abrasive. Table 28-3 lists the primary abrasives and their approximate Knoop hardness (kg/mm^2). The particles must be able to decompose at elevated temperatures. Two other properties are significant in abrasive grits—attrition and friability. *Attrition* refers to the abrasive wear action of the grits resulting in dulled edges, grit flattening, and wheel glazing. *Friability* refers to the fracture of the grits and is the opposite of toughness. In grinding, it is important that grits be able to fracture to expose new, sharp edges.

Artificial abrasives date from 1891, when E. G. Acheson, while attempting to produce precious gems, discovered how to make *silicon carbide* (SiC). Silicon carbide is made by charging an electric furnace with silica sand, petroleum coke, salt, and sawdust. By passing large amounts of current through the charge, a temperature of over 4000°F is maintained for several hours, and a solid mass of silicon carbide crystals results. After the furnace has cooled, the mass of crystals is removed, crushed, and graded (sorted) into

TABLE 28-3 Knoop Hardness Values for Common Abrasives

Abrasive Material	Year of Discovery	Hardness (Knoop)	Temperature of Decomposition in Oxygen (°C)	Comments and Uses
Quartz	?	320		Sand blasting
Aluminum oxide	1893	1600–2100	1700–2400	Softer and tougher than silicon carbide; used on steel, iron, brass, silicon
Carbide	1891	2200–2800	1500–2000	Used for brass, bronze, aluminum, and stainless and cast iron
Borazon [cubic boron nitride stainless (CBN)]	1957	4200–5400	1200–1400	For grinding hard, tough tool steels, stainless steel, cobalt and nickel based, superalloys, and hard coatings
Diamond (synthetic)	1955	6000–9000	700–800	Used to grind nonferrous materials, tungsten carbide, and ceramics

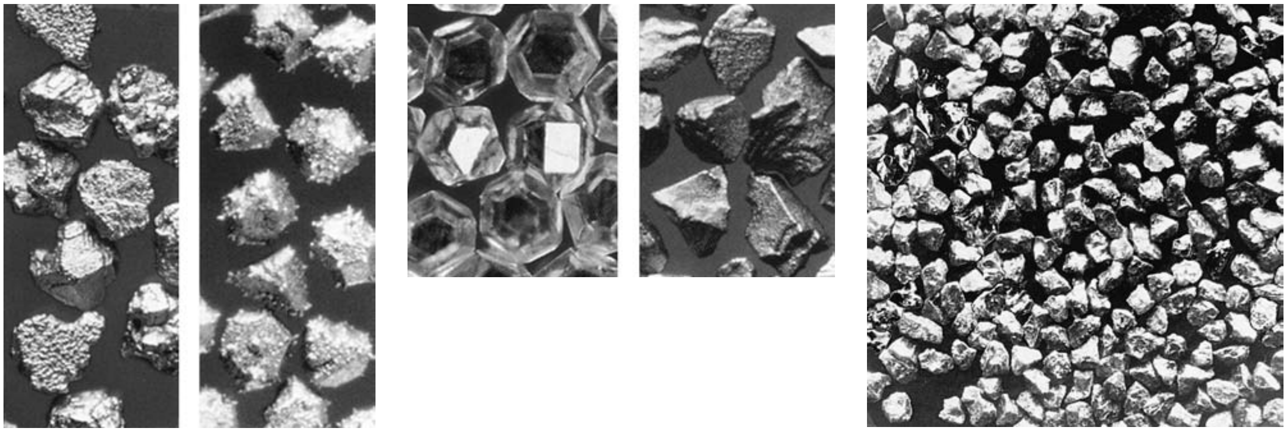

FIGURE 28-2 Loose abrasive grains at high magnification, showing their irregular, sharp cutting edges. *(Courtesy of Norton Company.)*

various desired sizes. As can be seen in Figure 28-2, the resulting grits, or grains, are irregular in shape, with cutting edges having every possible rake angle. Silicon carbide crystals are very hard (Knoop 2480), friable, and rather brittle. This limits their use. Silicon carbide is sold under the trade names Carborundum and Crystolon.

Aluminum oxide (Al_2O_3) is the most widely used artificial abrasive. Also produced in an arc furnace from bauxite, iron filings, and small amounts of coke, it contains aluminum hydroxide, ferric oxide, silica, and other impurities. The mass of aluminum oxide that is formed is crushed, and the particles are graded to size. Common trade names for aluminum oxide abrasives are Alundum and Aloxite. Although aluminum oxide is softer (Knoop 2100) than silicon carbide, it is considerably tougher. Consequently, it is a better general-purpose abrasive.

Diamonds are the hardest of all materials. Those that are used for abrasives are either natural, off-color stones (called *garnets*) that are not suitable for gems, or small, synthetic stones that are produced specifically for abrasive purposes. Manufactured stones appear to be somewhat more friable and thus tend to cut faster and cooler. They do not perform as satisfactorily in metal-bonded wheels. Diamond abrasive wheels are used extensively for sharpening carbide and ceramic cutting tools. Diamonds also are used for truing and dressing other types of abrasive wheels. Diamonds are usually used only when cheaper abrasives will not produce the desired results. Garnets are used primarily in the form of very finely crushed and graded powders for fine polishing.

Cubic boron nitride (CBN) is not found in nature. It is produced by a combination of intensive heat and pressure in the presence of a catalyst. CBN is extremely hard, registering at 4700 on the Knoop scale. It is the second-hardest substance created by nature or manufactured and is often referred to, along with diamonds, as a superabrasive. Hardness, however, is not everything.

CBN far surpasses diamond in the important characteristic of thermal resistance. At temperatures of 650°C, at which diamond may begin to revert to plain carbon dioxide, CBN continues to maintain its hardness and chemical integrity. When the temperature of 1400°C is reached, CBN changes from its cubic form to a hexagonal form and loses hardness. CBN can be used successfully in grinding iron, steel, alloys of iron, Ni-based alloys, and other materials. CBN works very effectively (long wheel life, high *G* ratio, good surface quality, no burn or chatter, low scrap rate, and overall increase in parts/shift) on hardened materials (R_c 50 or higher). It can also be used for soft steel in selected situations. CBN does well at conventional grinding speeds (6000 to 12,000 ft/min), resulting in lower total grinding in conventional equipment. CBN can also perform well at high grinding speeds (12,000 ft/min and higher) and will enhance the benefits from future machine tools. CBN can solve difficult-to-grind jobs, but it also generates cost benefits in many production grinding operations despite its higher cost. CBN is manufactured by the General Electric Company under the trade name of Borazon.

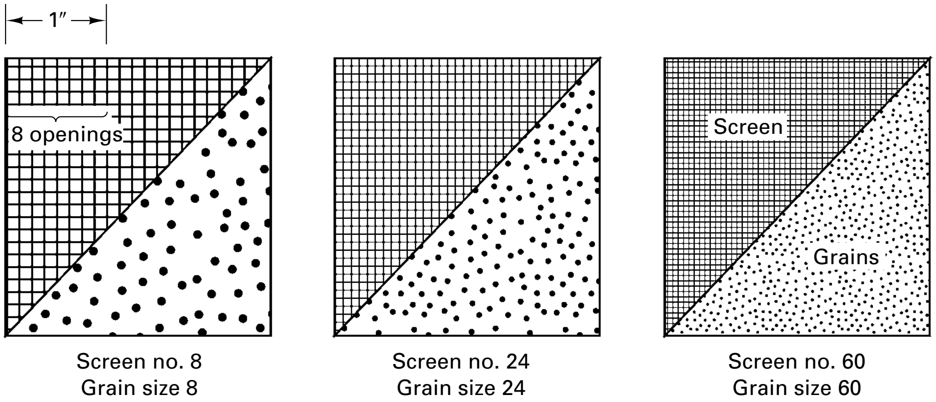

FIGURE 28-3 Typical screens for sifting abrasives into sizes. The larger the screen number (of opening per linear inch), the smaller the grain size. *(Courtesy of Carborundum Company.)*

ABRASIVE GRAIN SIZE AND GEOMETRY

To enhance the process capability of grinding, abrasive grains are sorted into sizes by mechanical sieving machines. The number of openings per linear inch in a sieve (or screen) through which most of the particles of a particular size can pass determines the grain size (Figure 28-3).

A no. 24 grit would pass through a standard screen having 24 openings per inch but would not pass through one having 30 openings per inch. These numbers have since been specified in terms of millimeters and micrometers (see ANSI B74.12 for details). Commercial practice commonly designates grain sizes from 4 to 24, inclusive, as *coarse*; 30 to 60, inclusive, as *medium*; and 70 to 600, inclusive, as *fine*. Grains smaller than 220 are usually termed *powders*. Silicon carbide is obtainable in grit sizes ranging from 2 to 240 and aluminum oxide in sizes from 4 to 240. Superabrasive grit sizes normally range from 120 grit for CBN to 400 grit for diamond. Sizes from 240 to 600 are designated as *flour* sizes. These are used primarily for lapping, or in fine-honing stones for fine finishing tasks.

The grain size is closely related to the surface finish and metal removal rate. In grinding wheels and belts, coarse grains cut faster while fine grains provide better finish, as shown in Figure 28-4.

The grain diameter can be estimated from the screen number (S), which corresponds to the number of openings per inch. The mean diameter of the grain (g) is related to the screen number by $g \cong 0.7/S$.

Regardless of the size of the grain, only a small percentage (2 to 5%) of the surface of the grain is operative at any one time. That is, the depth of cut for an individual grain (the actual feed per grit) with respect to the grain diameter is very small. Thus the

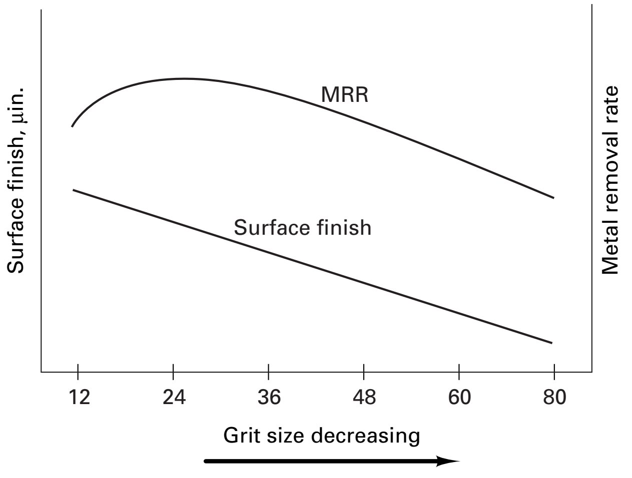

FIGURE 28-4 MRR and surface finish versus grit size.

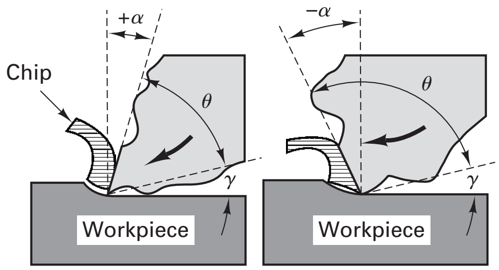

FIGURE 28-5 The rake angle of abrasive particles can be positive, zero, or negative.

chips are small. As the grain diameter decreases, the number of active grains per unit area increases and the cuts become finer because grain size is the controlling factor for surface finish (roughness). Of course, the MRR also decreases.

The grain shape is also important, because it determines the tool geometry—that is, the back rake angle and the clearance angle at the cutting edge of the grit (Figure 28-5). In the figure, γ is the clearance angle, θ is the wedge angle, and α is the rake angle. The cavities between the grits provide space for the chips, as shown in Figure 28-6. The volume of the cavities must be greater than the volume of the chips generated during the cut.

Obviously, there is no specific rake angle but rather a distribution of angles. Thus a grinding wheel can present to the surface rake angles in the range of +45° to −60° or greater. Grits with large negative rake angles or rounded cutting edges do not form chips but will rub or *plow* a groove in the surface (Figure 28-7). Thus abrasive machining is a

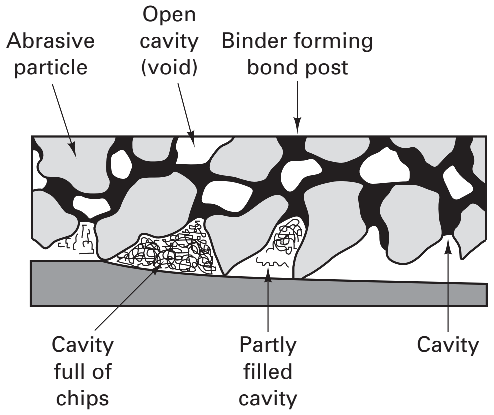

FIGURE 28-6 The cavities or voids between the grains must be large enough to hold all the chips during the cut.

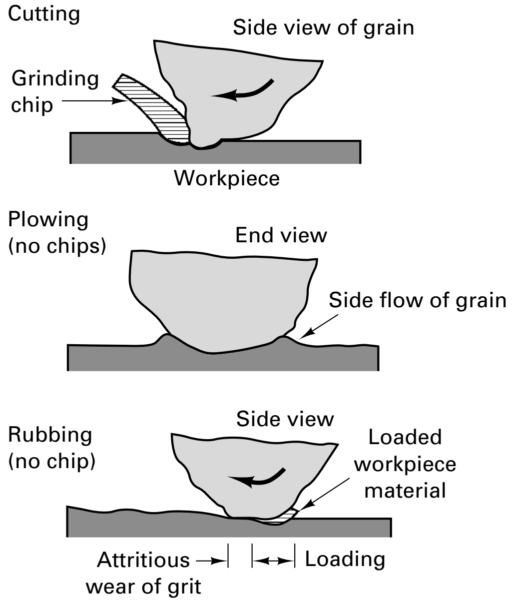

FIGURE 28-7 The grits interact with the surface in three ways: cutting, plowing, and rubbing.

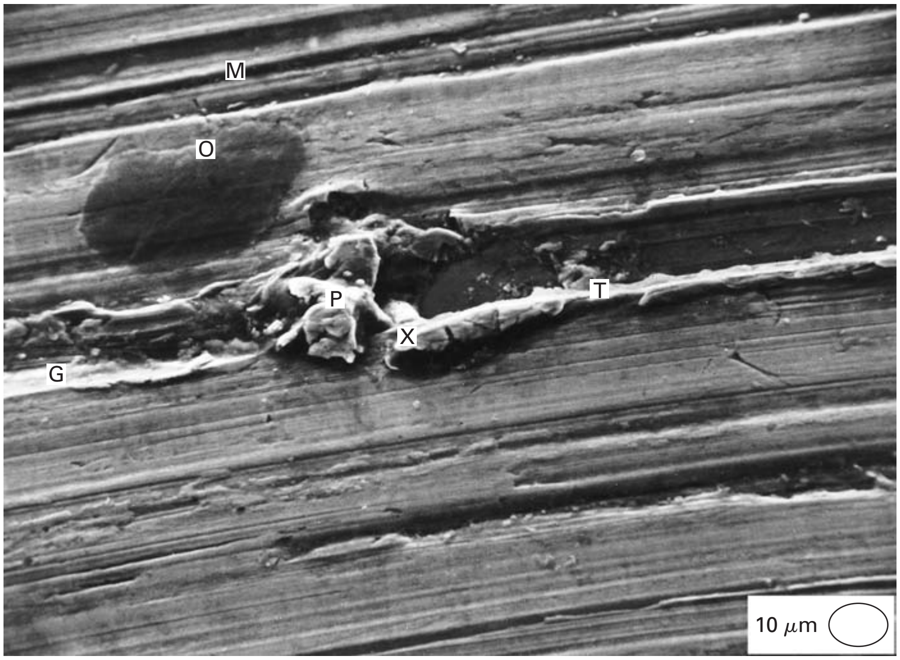

FIGURE 28-8 SEM micrograph of a ground steel surface showing a plowed track (T) in the middle and a machined track (M) above. The grit fractured, leaving a portion of the grit in the surface (X), a prow formation (P), and a groove (G) where the fractured portion was pushed farther across the surface. The area marked (O) is an oil deposit.

mixture of *cutting, plowing, and rubbing*, with the percentage of each being highly dependent on the geometry of the grit. As the grits are continuously abraded, fractured, or dislodged from the bond, new grits are exposed and the mixture of cutting, plowing, and rubbing is changing continuously. A high percentage of the energy used for rubbing and plowing goes into the workpiece, but when chips are found, 95 to 98% of the energy (the heat) goes into the chip. Figure 28-8 shows a scanning electron microscope (SEM) micrograph of a ground surface with a plowing track.

In grinding, the chips are small but are formed by the same basic mechanism of compression and shear as discussed in Chapter 20 for regular metalcutting. Figure 28-9 shows steel chips from a grinding process at high magnification. They show the same structure as chips from other machining processes. Chips flying in the air from a grinding process often have sufficient heat energy to burn or melt in the atmosphere. Sparks observed during grinding steel with no cutting fluid are really burning chips, as shown in Figure 28-8.

The feeds and depths of cut in grinding are small while the cutting speeds are high, resulting in high specific horsepower numbers. Because cutting is obviously more efficient than plowing or rubbing, grain fracture and grain pullout are natural phenomena

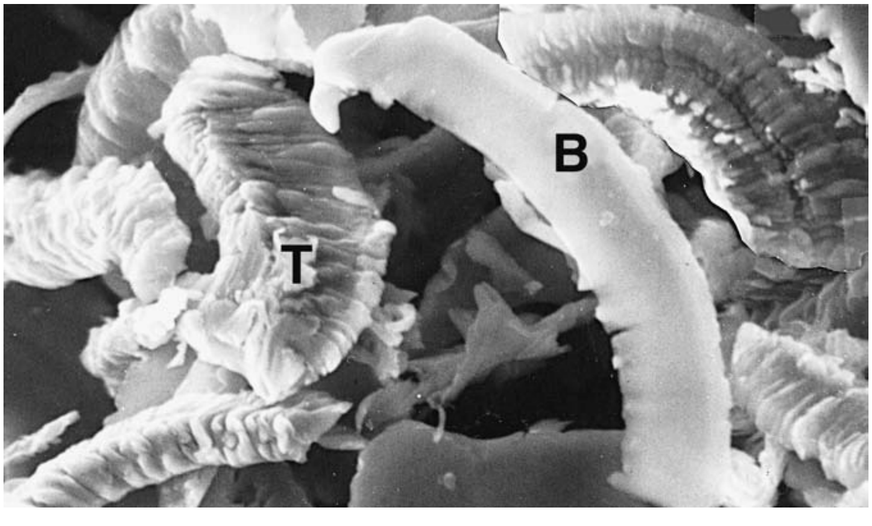

FIGURE 28-9 SEM micrograph of stainless steel chips from a grinding process. The tops (T) of the chips have the typical shear-front-lamella structure while the bottoms (B) are smooth where they slide over the grit 4800×.

used to keep the grains sharp. As the grains become dull, cutting forces increase, and there is an increased tendency for the grains to fracture or break free from the bonding material.

28.3 GRINDING WHEEL STRUCTURE AND GRADE

Grinding, wherein the abrasives are bonded together into a wheel, is the most common abrasive machining process. The performance of grinding wheels is greatly affected by the bonding material and the spatial arrangement of the particles' grits.

The spacing of the abrasive particles with respect to each other is called *structure*. Close-packed grains have dense structure; open structure means widely spaced grains. Open-structure wheels have larger chip cavities but fewer cutting edges per unit area (Figure 28-10a).

The fracturing of the grits is controlled by the bond strength, which is known as the *grade*. Thus, grade is a measure of how strongly the grains are held in the wheel. It is really dependent on two factors: the strength of the bonding materials and the amount of the bonding agent connecting the grains. The latter factor is illustrated in Figure 28-10b. Abrasive wheels are really porous. The grains are held together with "posts" of bonding material. If these posts are large in cross section, the force required to break a grain free from the wheel is greater than when the posts are small. If a high dislodging force is required, the bond is said to be *hard*. If only a small force is required, the bond is said to be *soft*. Wheels are commonly referred to as hard or soft, referring to the net strength of the bond, resulting from both the strength of the bonding material and its disposition between the grains.

G RATIO

The loss of grains from the wheel means that the wheel is changing size. The grinding ratio, or *G* ratio, is defined as the cubic inches of stock removed divided by the cubic inches of wheel lost. In conventional grinding, the *G* ratio is in the range 20:1 to 80:1. The *G* ratio is a measure of grinding production and reflects the amount of work a wheel can do during its useful life. As the wheel loses material, it must be reset or repositioned to maintain workpiece size.

A typical vitrified grinding wheel will consist of 50 vol% abrasive particles, 10 vol% bond, and 40 vol% cavities; that is, the wheels have porosity. The manner in which the wheel performs is influenced by the following factors:

1. The mean force required to dislodge a grain from the surface (the grade of the wheel)
2. The cavity size and distribution of the porosity (the structure)

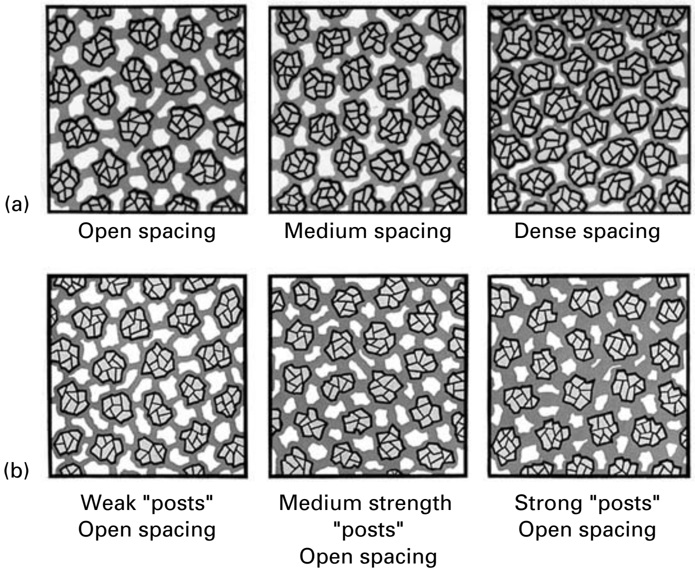

FIGURE 28-10 Meaning of terms *structure* and *grade* for grinding wheels. (a) The structure of a grinding wheel depends on the spacing of the grits. (b) The grade of a grinding wheel depends on the amount of bonding agent (posts) holding abrasive grains in the wheel.

3. The mean spacing of active grains in the wheel surface (grain size and structure)
4. The properties of the grain (hardness, attrition, and friability)
5. The geometry of the cutting edges of the grains (rake angles and cutting-edge radius compared to depth of cut)
6. The process parameters (speeds, feeds, cutting fluids) and type of grinding (surface, or cylindrical)

It is easy to see why grinding is a complex process, difficult to control.

BONDING MATERIALS FOR GRINDING WHEELS

Bonding material is a very important factor to be considered in selecting a grinding wheel. It determines the strength of the wheel, thus establishing the maximum operating speed. It determines the elastic behavior or deflection of the grits in the wheel during grinding. The wheel can be hard or rigid, or it can be flexible. Finally, the bond determines the force required to dislodge an abrasive particle from the wheel and thus plays a major role in the cutting action. Bond materials are formulated so that the ratio of bond wear matches the rate of wear of the abrasive grits. Bonding materials in common use are the following:

1. *Vitrified bonds* are composed of clays and other ceramic substances. The abrasive particles are mixed with the wet clays so that each grain is coated. Wheels are formed from the mix, usually by pressing, and then dried. They are then fired in a kiln, which results in the bonding material's becoming hard and strong, having properties similar to glass. Vitrified wheels are porous, strong, rigid, and unaffected by oils, water, or temperature over the ranges usually encountered in metal cutting. The operating speed range in most cases is 5500 to 6500 ft/min, but some wheels now operate at surface speeds up to 16,000 ft/min.
2. *Resinoid*, or phenolic resins, can be used. Because plastics can be compounded to have a wide range of properties, such wheels can be obtained to cover a variety of work conditions. They have, to a considerable extent, replaced shellac and rubber wheels. Composite materials are being used in rubber-bonded or resinoid-bonded wheels that are to have some degree of flexibility or are to receive considerable abuse and side loading. Various natural and synthetic fabrics and fibers, glass fibers, and nonferrous wire mesh are used for this purpose.
3. *Silicate* wheels use silicate of soda (waterglass) as the bond material. The wheels are formed and then baked at about 500°F for a day or more. Because they are more brittle and not so strong as vitrified wheels, the abrasive grains are released more readily. Consequently, they machine at lower surface temperatures than vitrified wheels and are useful in grinding tools when heat must be kept to a minimum.
4. *Shellac-bonded* wheels are made by mixing the abrasive grains with shellac in a heated mixture, pressing or rolling into the desired shapes, and baking for several hours at about 300°F. This type of bond is used primarily for strong, thin wheels having some elasticity. They tend to produce a high polish and thus have been used in grinding such parts as camshafts and mill rolls.
5. *Rubber* bonding is used to produce wheels that can operate at high speeds but must have a considerable degree of flexibility so as to resist side thrust. Rubber, sulfur, and other vulcanizing agents are mixed with the abrasive grains. The mixture is then rolled out into sheets of the desired thickness, and the wheels are cut from these sheets and vulcanized. Rubber-bonded wheels can be operated at speeds up to 16,000 ft/min. They are commonly used for snagging work in foundries and for thin cutoff wheels.
6. *Superabrasive* wheels are either electroplated (single layer of superabrasive plated to outside diameter of a steel blank) or a thin segmented drum of vitrified CBN surrounds a steel core. The steel core provides dimensional accuracy, and the replaceable segments provide durability, homogeneity, and repeatability while increasing wheel life. The latter type of wheels can use resin, metal, or vitrified bonding. Selection of bond grade and structure (also called abrasive concentration) is critical.

For the electroplated wheels, nickel is used to attach a single layer of CBN (or diamond) to the OD of an accurately ground or turned steel blank. For the vitrified wheel, superabrasives are mixed with bonding media and molded (or preformed and sintered) into segments or a ring. The ring is mounted on a split steel body. Porosity is varied (to alter structure) by varying preform pressure or by using "pore-forming" additives to the bond material that are vaporized during the sintering cycle. The steel-cored segmented design can rotate at 40,000 sfpm (200 m/s) whereas a plain vitrified wheel may burst at 20,000 fpm.

ABRASIVE MACHINING VERSUS CONVENTIONAL GRINDING VERSUS LOW-STRESS GRINDING

The condition wherein very rapid metal removal can be achieved by grinding is the one to which some have applied the term *abrasive machining*. The metal removal rates are compared with, or exceed, those obtainable by milling or turning or broaching, and the size tolerances are comparable. It is obviously just a special type of grinding, using abrasive grains as cutting tools, as do all other types of abrasive machining. Abrasive grinding done in an aggressive way can produce sufficient localized plastic deformation and heat in the surface so as to develop tensile residual stresses, layers of overtempered martensite (in steels), and even microcracks, because this process is quite abusive. See Figure 28-11 for a discussion of residual stresses produced by varius surface grinding processes.

Conventional grinding can be replaced by procedures that develop lower surface stresses when service failures due to fatigue or stress corrosion are possible. This is accomplished by employing softer grades of grinding wheels, reducing the grinding speeds and infeed rates, using chemically active cutting fluids (e.g., highly sulfurized oil or KNO_2 in water), as outlined in the table of grinding conditions in Figure 28-11. These procedures may require the addition of a variable-speed drive to the grinding machine. Generally, only about 0.005 to 0.010 in. of surface stock needs to be finish ground in this way, as the depth of the surface damage due to conventional grinding or abusive grinding is 0.005 to 0.007 in. High-strength steels, high-temperature nickel, and cobalt-based alloys and titanium alloys are particularly sensitive to surface deformation and cracking problems from grinding. Other postprocessing processes, such as polishing, honing, and chemical milling plus peening, can be used to remove the deformed layers in critically stressed parts. It is strongly recommended, however, that testing programs be used along with service experience on critical parts before these procedures are employed in production.

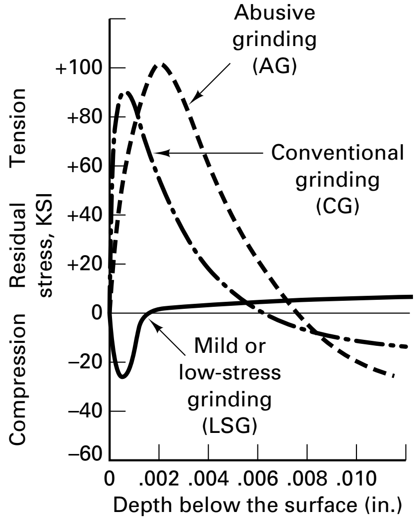

Grinding conditions

	Abusive AG	Conventional CG	Low-stress LSG
Wheel	A46MV	A46KV	A46HV or A60IV
Wheel speed ft/min	6,000–18,000	4,500–6,500	2500–3000
Down feed in./pass	.002–.004	.001–.003	.0002–.005
Cross feed in./pass	.040–.060	.040–.060	.040–.060
Table speed ft/min	40–100	40–100	40–100
Fluid	Dry	Sol oil (1:20)	Sulfurized oil

FIGURE 28-11 Typical residual stress distributions produced by surface grinding with different grinding conditions for abusive, conventional, and low-stress grinding. Material is 4340 steel. *(From M. Field and W. P. Kosher, "Surface Integrity in Grinding," in* New Developments in Grinding, *Carnegie-Mellon University Press, Pittsburgh, 1972, p. 666.)*

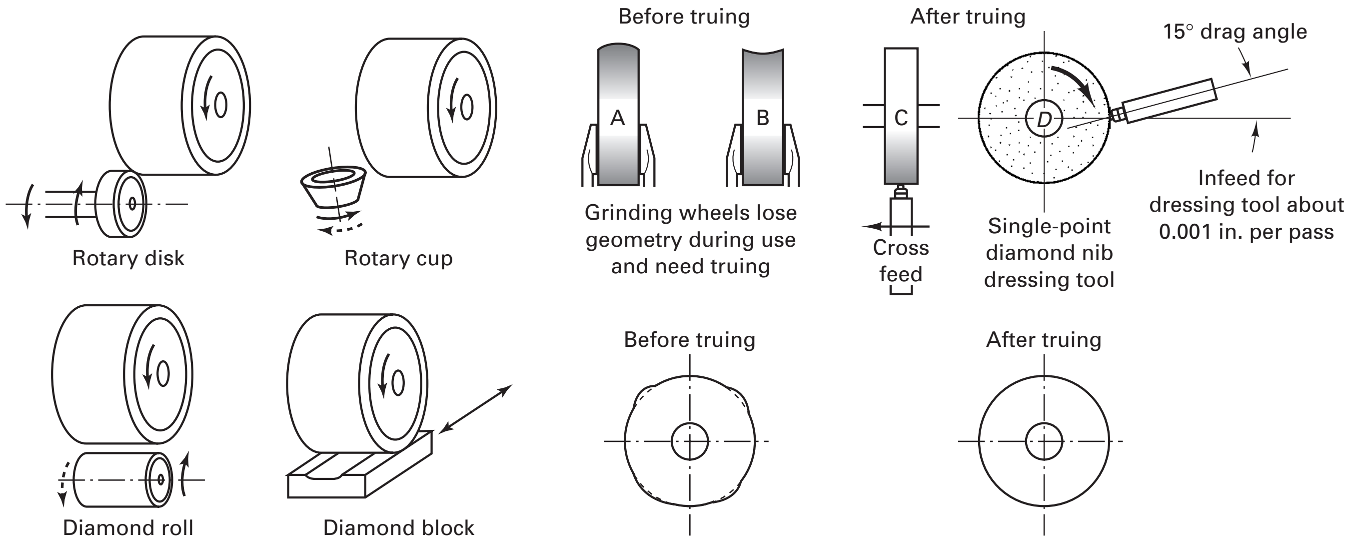

FIGURE 28-12 Truing methods for restoring grinding geometry include nibs, rolls, disks, cups, and blocks.

In the casting and forging industries, the term often used for abrasive maching is *snagging*. *Snagging* is a type of rough manual grinding that is done to remove fins, gates, risers, and rough spots from castings or flash from forgings, preparatory to further machining. The primary objective is to remove substantial amounts of metal rapidly without much regard for accuracy, so this is a form of abrasive machining except that pedestal-type or *swing grinders* ordinarily are used. Portable electric or hand air grinders are also used for this purpose and for miscellaneous grinding in connection with welding.

Grinding wheels lose their geometry during use. *Truing* restores the original shape. A single-point diamond tool can be used to *true* the wheel while fracturing abrasive grains to expose new grains and new cutting edges on worn, glazed grains (Figure 28-12). Truing can also be accomplished by grinding the grinding wheel with a controlled-path or powered rotary device using conventional abrasive wheels. The precision in generating a trued wheel surface by these methods is poorer than by the method described earlier.

As the wheel is used, there is a tendency for the wheel to become *loaded* (metal chips become lodged in the cavities between the grains). Also, the grains dull or glaze (grits wear, flatten, and polish). Unless the wheel is cleaned and sharpened (or dressed), the wheel will not cut as well and will tend to plow and rub more. Figure 28-13 shows an arrangement for stick *dressing* a grinding wheel. The dulled grains cause the cutting forces on the grains to increase, ideally resulting in the grains' fracturing or being pulled out of the bond, thus providing a continuous exposure of sharp cutting edges. Such a continuous action ordinarily will not occur for light feeds and depths of cut. For heavier cuts, grinding wheels do become somewhat self-dressing, but the workpiece may become overheated and turn a bluish temper color (this is called *burn*) before the wheel reaches a

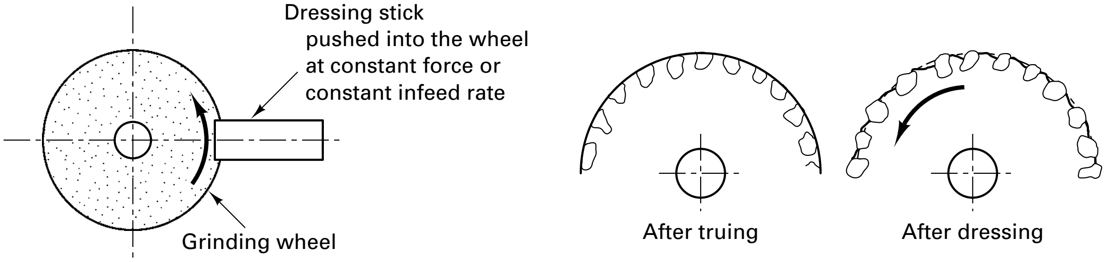

FIGURE 28-13 Schematic arrangement of stick dressing versus truing.

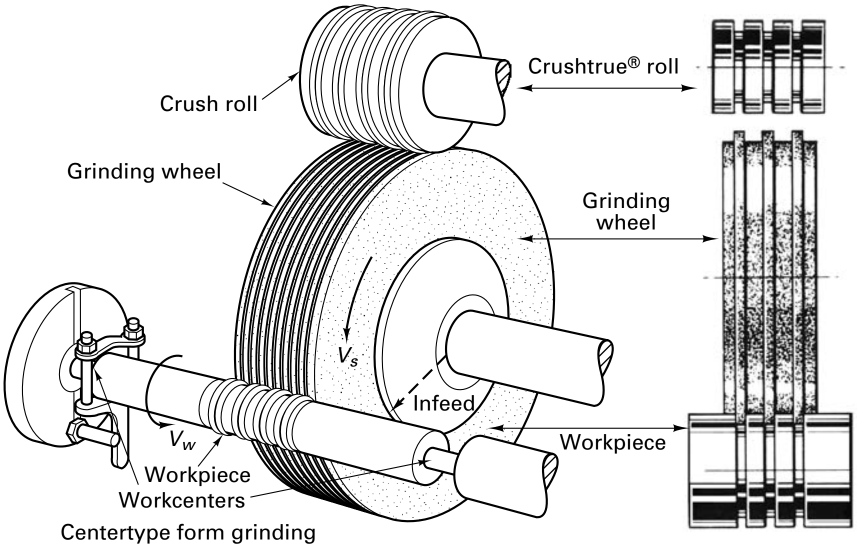

FIGURE 28-14 Continuous crush roll dressing and truing of a grinding wheel (form—truing and dressing throughout the process rather than between cycles) doing plunge cut grinding on a cylinder held between centers.

fully dressed condition. A burned surface, the consequence of an oxide layer formation, results in the scrapping of several workpieces before parts of good quality are ground.

Resin-bonded wheels can be trued by grinding with hard ceramics such as tungsten carbide. The procedure for truing and dressing a CBN wheel in a surface grinder might be as follows: Use 0.0002-in. downfeed per pass and cross feed slightly more than half the wheel thickness at moderate table speeds. The wheel speed is the same as the grinding speed. The grinding power will gradually increase, as the wheel is getting dull, while being trued. When the power exceeds normal power drawn during workpiece grinding, stop the truing operation. Dress the wheel face open using a J-grade stick, with abrasive one grit size smaller than CBN. Continue the truing. Repeat this cycle until the wheel is completely trued.

Modern grinding machines are equipped so that the wheel can be dressed and/or trued continuously or intermittently while grinding continues. A common way to do this is by *crush dressing* (Figure 28-14). Crush dressing consists of forcing a hard roll (tungsten carbide or high speed steel) having the same contour as the part to be ground against the grinding wheel while it is revolving—usually quite slowly. A water-based coolant is used to flood the dressing zone at 5 to 10 gal/min. The crushing action fractures and dislodges some of the abrasive grains, exposing fresh sharp edges, allowing free cutting for faster infeed rates. This procedure is usually employed to produce and maintain a special contour to the abrasive wheel. This is also called wheel profiling. Crush dressing is a very rapid method of dressing grinding wheels, and because it fractures abrasive grains, it results in free cutting and somewhat cooler grinding. The resulting surfaces may be slightly rougher than when diamond dressing is used.

■ 28.4 GRINDING WHEEL IDENTIFICATION

Most grinding wheels are identified by a standard marking system that has been established by the American National Standards Institute. This system is illustrated and explained in Figure 28-15. The first and last symbols in the marking are left to the discretion of the manufacturer.

GRINDING WHEEL GEOMETRY

The shape and size of the wheel are critical selection factors. Obviously, the shape must permit proper contact between the wheel and all of the surface that must be ground. Grinding wheel shapes have been standardized, and eight of the most commonly used types are shown in Figure 28-16. Types 1, 2, and 5 are used primarily for grinding external or internal cylindrical surfaces and for plain surface grinding. Type 2 can be mounted for grinding on either the periphery or the side of the wheel. Type 4 is used with tapered safety flanges so that if the wheel breaks during rough grinding, such as snagging, these

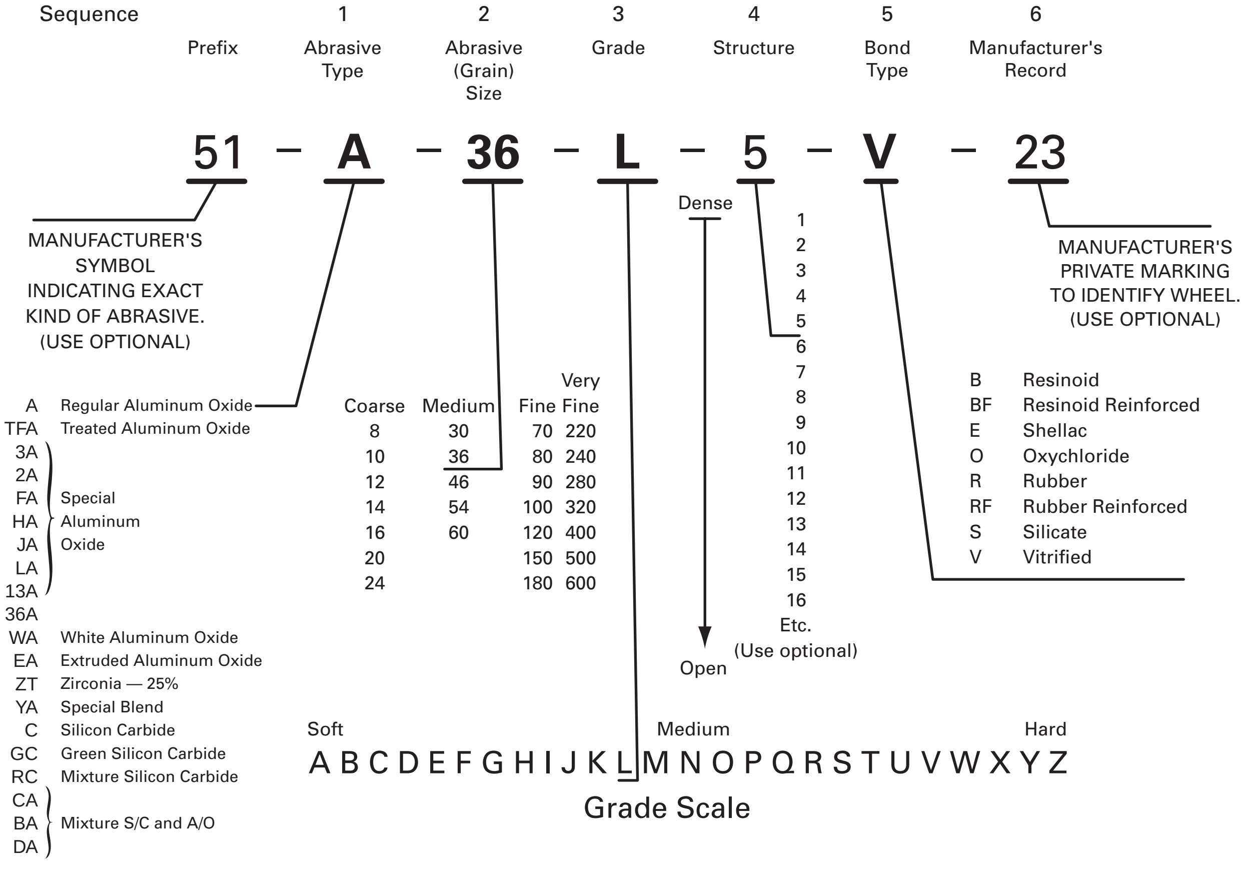

Standard bonded-abrasive wheel-marching system (ANSI *Standard* B74.13-1977)

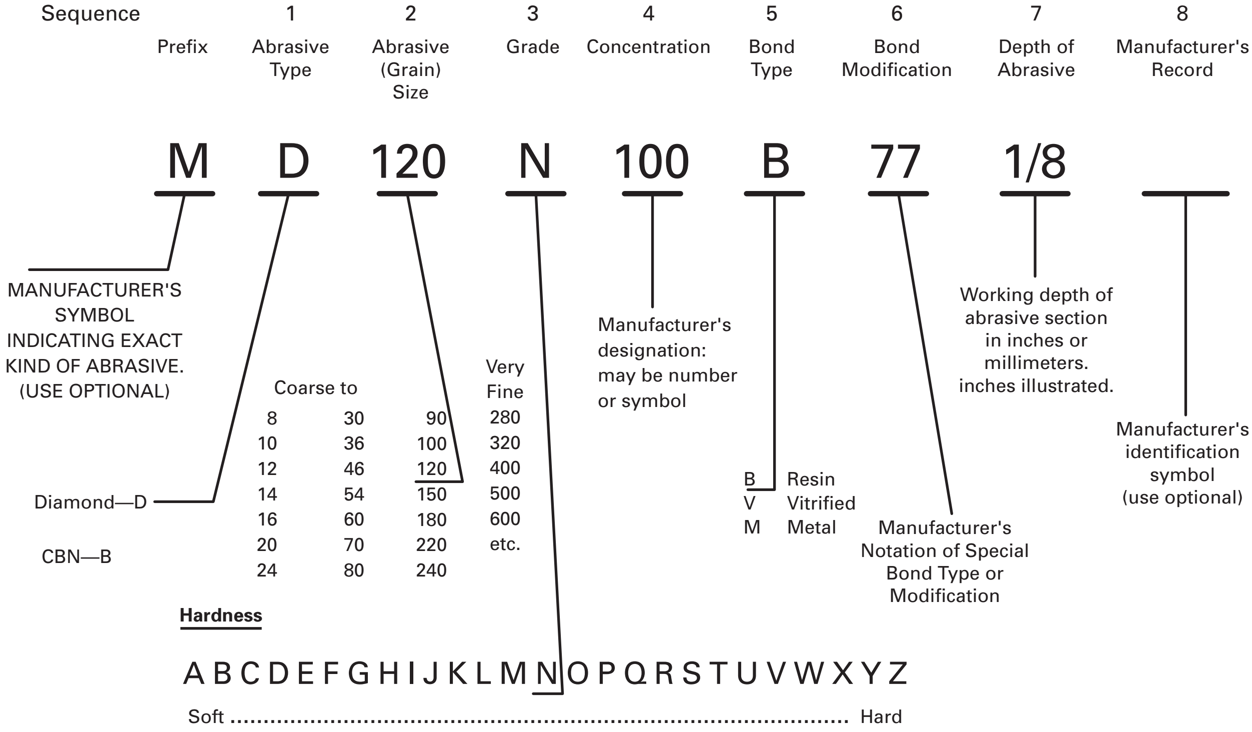

Wheel-marching system for diamond and cubic boron nitride wheels (ANSI *Standard* B74.13-1977).

FIGURE 28-15 Standard marking systems for grinding wheels (ANSI standard B74. 13-1977).

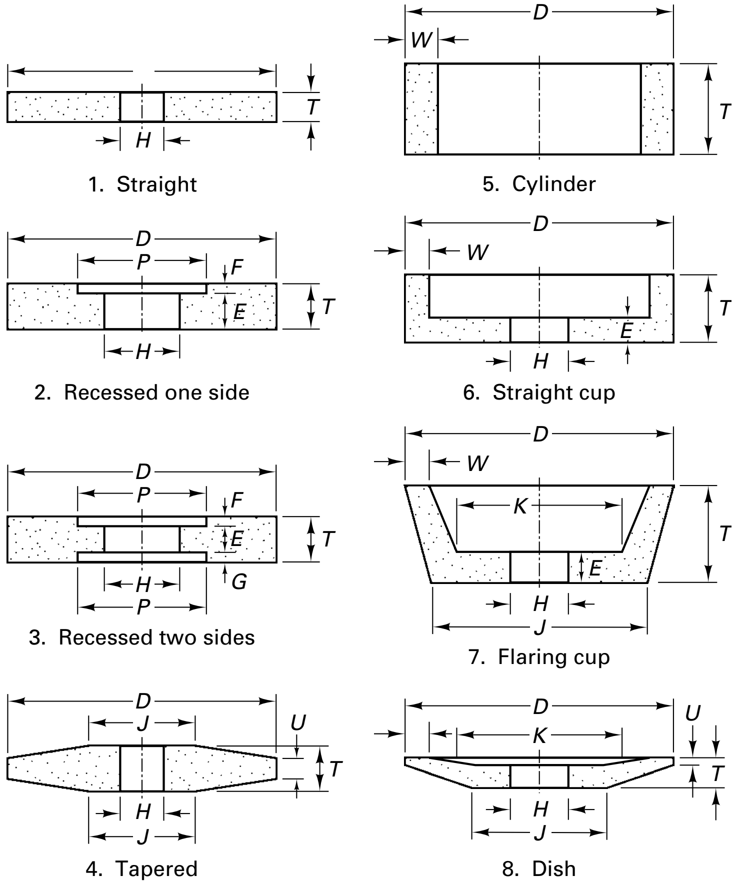

FIGURE 28-16 Standard grinding wheel shapes commonly used. *(Courtesy of Carborundum Company.)*

flanges will prevent the pieces of the wheel from flying and causing damage. Type 6, the straight cup, is used primarily for surface grinding but can also be used for certain types of offhand grinding. The flaring-cup type of wheel is used for tool grinding. Dish-type wheels are used for grinding tools and saws.

Type 1, the straight grinding wheels, can be obtained with a variety of standard faces. Some of these are shown in Figure 28-17.

The size of the wheel to be used is determined primarily by the spindle rpm values available on the grinding machine and the proper cutting speed for the wheel, as dictated by the type of bond. For most grinding operations the cutting speed is about 2500 to 6500 ft/min. Different types and grades of bond often justify considerable deviation from these speeds. For certain types of work using special wheels and machines, as in thread grinding and "abrasive machining," much higher speeds are used.

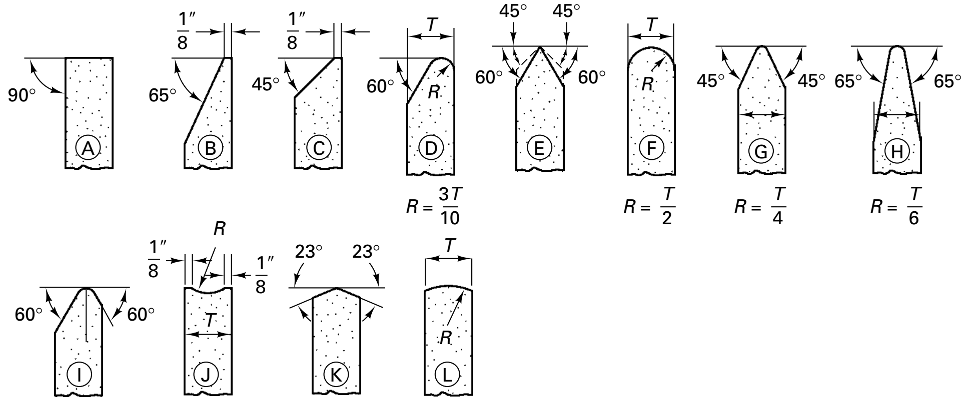

FIGURE 28-17 Standard face contours for straight grinding wheels. *(Courtesy of Carborundum Company.)*

The operation for which the abrasive wheel is intended will also influence the wheel shape and size. The major use categories are the following:

1. *Cutting off*: for slicing and slotting parts; use thin wheel, organic bond
2. *Cylindrical between centers*: grinding outside diameters of cylindrical workpieces
3. *Cylindrical, centerless*: grinding outside diameters with work rotated by regulating wheel
4. *Internal cylindrical*: grinding bores and large holes
5. *Snagging*: removing large amounts of metal without regard to surface finish or tolerances
6. *Surface grinding*: grinding flat workpieces
7. *Tool grinding*: for grinding cutting edges on tools such as drills, milling cutters, taps, reamers, and single-point high-speed-steel tools
8. *Offhand grinding*: work or the grinding tool is handheld

In many cases, the classification of processes coincides with the classification of machines that do the process. Other factors that will influence the choice of wheel to be selected include the workpiece material, the amount of stock to be removed, the shape of the workpiece, and the accuracy and surface finish desired. Workpiece material has a great impact on choice of the wheel. Hard, high-strength metals (tool steels, alloy steels) are generally ground with aluminum oxide wheels or cubic boron nitride wheels. Silicon carbide and CBN are employed in grinding brittle materials (cast iron and ceramics) as well as softer, low-strength metals such as aluminum, brass, copper, and bronze. Diamonds have taken over the cutting of tungsten carbides, and CBN is used for precision grinding of tool and die steel, alloy steels, stainless steel, and other very hard materials. There are so many factors that affect the cutting action that there are no hard-and-fast rules with regard to abrasive selection.

Selection of grain size is determined by whether coarse or fine cutting and finish are desired. Coarse grains take larger depths of cut and cut more rapidly. Hard wheels with fine grains leave smaller tracks and therefore are usually selected for finishing cuts. If there is a tendency for the work material to load the wheel, larger grains with a more open structure may be used for finishing.

BALANCING GRINDING WHEELS

Because of the high rotation speeds involved, grinding wheels must never be used unless they are in good balance. A slight imbalance will produce vibrations that will cause waviness in the work surface. It may cause a wheel to break, with the probability of serious damage and injury. The wheel should be mounted with proper bushings so that it fits snugly on the spindle of the machine. Rings of blotting paper should be placed between the wheel and the flanges to ensure that the clamping pressure is evenly distributed. Most grinding wheels will run in good balance if they are mounted properly and trued. Most machines have provision for compensating for a small amount of wheel imbalance by attaching weights to one mounting flange. Some have provision for semiautomatic balancing with weights that are permanently attached to the machine spindle.

SAFETY IN GRINDING

Because the rotational speeds are quite high, and the strength of grinding wheels is usually much less than that of the materials being ground, serious accidents occur much too frequently in connection with the use of grinding wheels. Virtually all such accidents could be avoided and are due to one or a combination of four causes. First, grinding wheels are occasionally operated at unsafe and improper speeds. All grinding wheels are clearly marked with the maximum rpm value at which they should be rotated. They are all tested to considerably above the designated rpm and are safe at the specified speed *unless abused*. *They should never*, *under any condition*, *be operated above the rated speed*. Second, a very common form of abuse, frequently accidental, is dropping the wheel or striking it against a hard object. This can cause a crack (which may not be readily visible), resulting in subsequent failure of the wheel while rotating at high speed under load. If a wheel is dropped or struck against a hard object, it should be discarded and never used unless tested at above the rated speed in a properly designed test stand. A third common cause of grinding wheel failure is

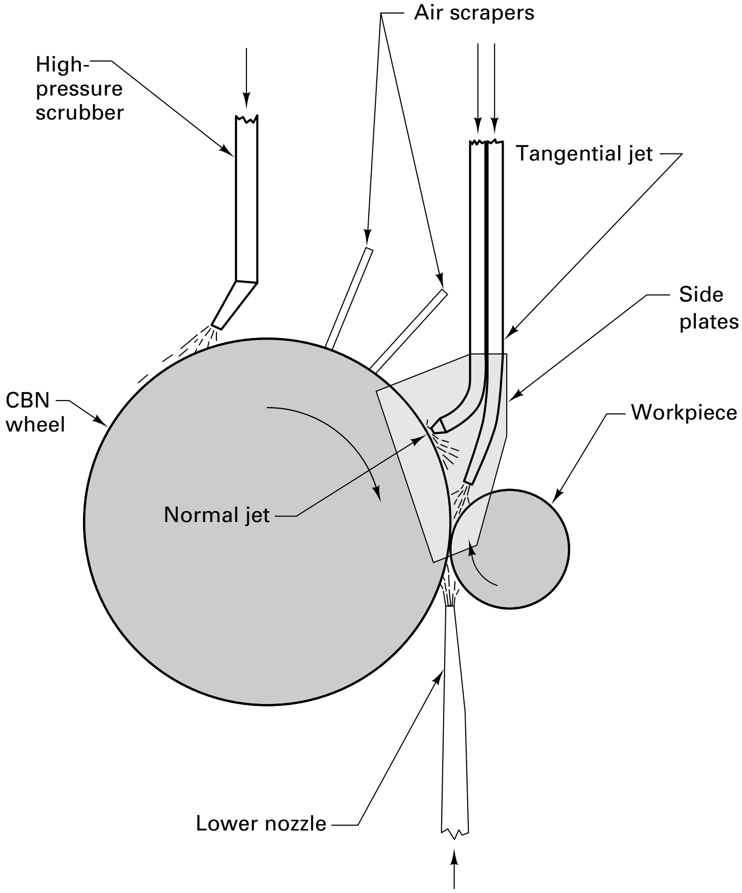

FIGURE 28-18 Coolant delivery system for optimum CBN grinding. (*Source: "Production Grinding with CBN," M. P. Hitchiner, CBN Grinding Systems Manager, Universal Beck, Romulus, MI,* Machining Technology, *Vol. 2, No. 2, 1991.)*

improper use, such as grinding against the side of a wheel that was designed for grinding only on its periphery. The fourth and most common cause of injury from grinding is the absence of a proper safety guard over the wheel and/or over the eyes or face of the operator. The frequency with which operators will remove safety guards from grinding equipment or fail to use safety goggles or face shields is amazing and inexcusable.

USE OF CUTTING FLUIDS IN GRINDING

Because grinding involves cutting, the selection and use of a cutting fluid is governed by the basic principles discussed in Chapter 21. If a fluid is used, it should be applied in sufficient quantities and in a manner that will ensure that the chips are washed away, not trapped between the wheel and the work. This is of particular importance in grinding horizontal surfaces. In hardened steel, the use of a fluid can help to prevent fine microcracks that result from highly localized heating. The air scraper shown in Figure 28-18 permits the cutting fluid (lubricant) to get onto the face of the wheel. Metal air scrapers disrupt the airflow. Upper and lower nozzles cool the grinding zone, while a high-pressure scrubber helps deter loading of the wheel.

Much snagging and off-hand grinding is done dry. On some types of material, dry grinding produces a better finish than can be obtained by wet grinding.

Grinding fluids strongly influence the performance of CBN wheels. Straight, sulfurized, or sulfochlorinated oils can enhance performance considerably when used with straight oils.

28.5 GRINDING MACHINES

Grinding machines commonly are classified according to the type of surface they produce. Table 28-4 presents such a classification, with further subdivision to indicate characteristic features of different types of machines within each classification. Grinding on all machines is done in three ways. In the first, the depth of cut (d_t) is obtained by *infeed*—moving the

TABLE 28-4 Grinding Machines

Type of Machine	Type of Surface	Specific Types or Features
Cylindrical external	External surface on rotating, usually cylindrical parts	Work rotated between centers Centerless Centerless Chucking Tool post Crankshaft, cam, etc.
Cylindrical internal	Internal diameters of holes	Chucking Planetary (work stationary) Centerless
Surface conventional	Flat surfaces	Reciprocating table or rotating table Horizontal or vertical spindle
Creep feed	Deep slots, profiles in hard steels, carbides, and ceramics using CBN and diamond	Rigid, chatter-free, creep feed rate Continuous dressing Heavy coolant flows NC or CNC control Variable speed wheel
Tool grinders	Tool angles and geometries	Universal Special
Other	Special or any of the above	Disk, contour, thread, flexible shaft, swing frame, snag, pedestal, bench

wheel down into the work or the work up into the wheel (Figure 28-19). The desired surface is then produced by traversing the wheel across (cross feed) the workpiece, or vice versa (Figure 28-19). In the second method, known as *plunge-cut* grinding, the basic movement is of the wheel being fed radially into the work while the latter revolves on centers. It is similar to form cutting on a lathe; usually a formed grinding wheel is used (Figure 28-14). In the third method, the work is fed very slowly past the wheel and the

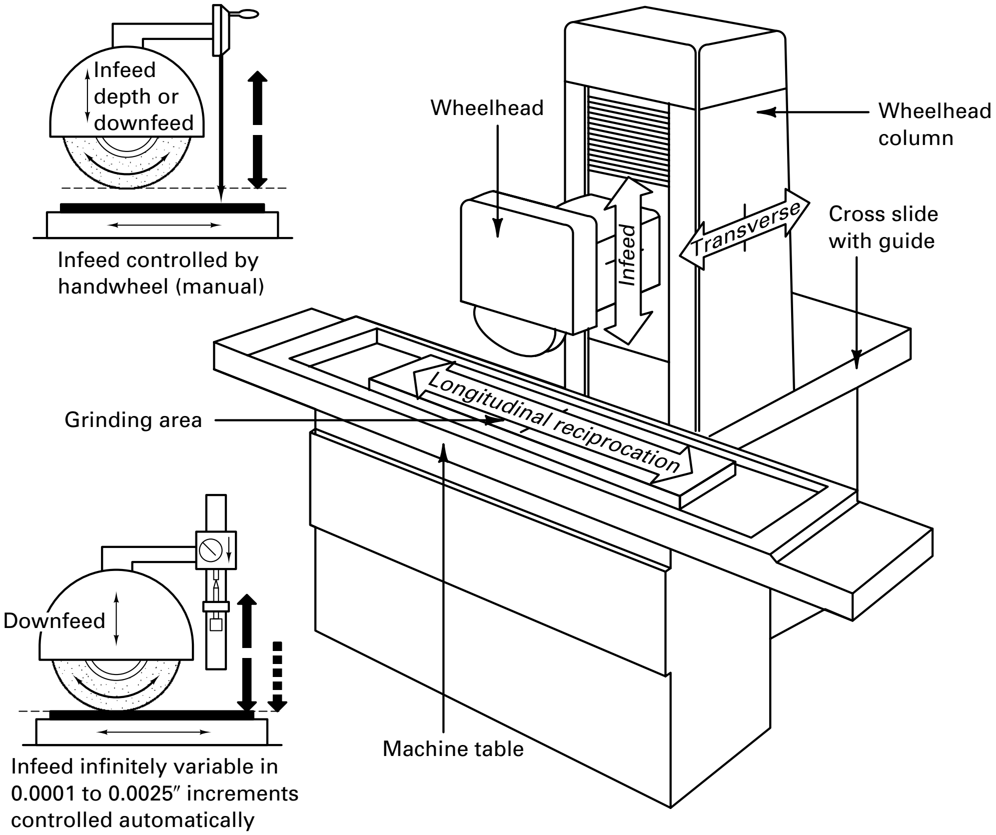

FIGURE 28-19 Horizontal-spindle surface grinder, with insets showing movements of wheelhead.

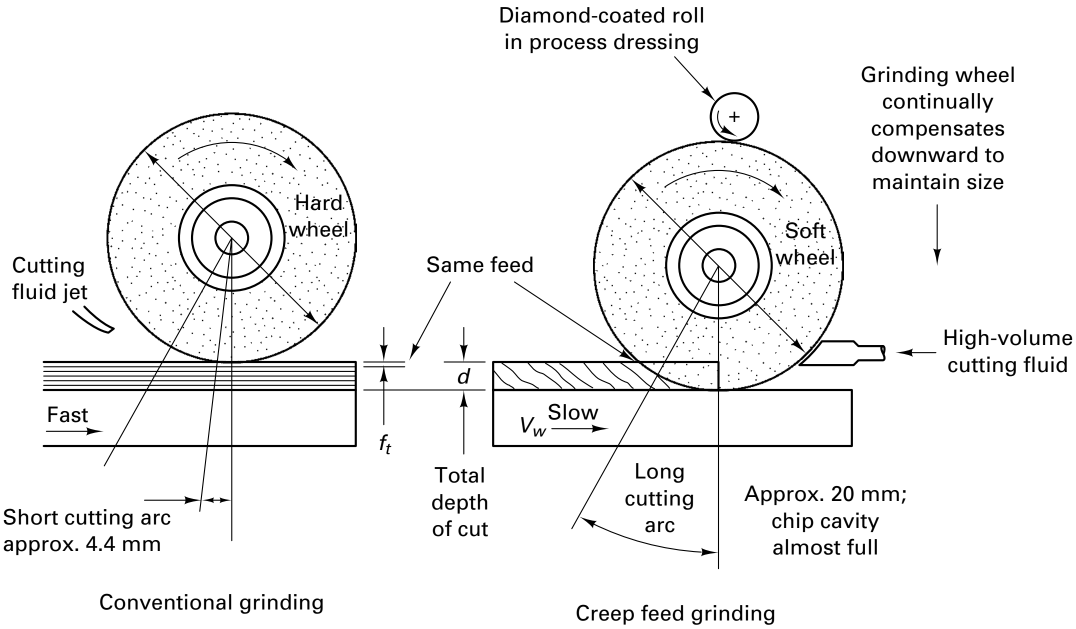

FIGURE 28-20 Conventional grinding contrasted to creep feed grinding. Note that crush roll dressing is used here; see Figure 28-14.

total downfeed or depth (d) is accomplished in a single pass (Figure 28-20). This is called *creep feed grinding* (CFG). (Table 28-5 compares CFG to conventional and high-speed grinding for CBN applications.)

The CFG method, often done in the surface grinding mode, is markedly different from conventional surface grinding. The depth of cut is increased 1000 to 10,000 times, and the work feed ratio is decreased in the same proportion; hence the name *creep feed grinding*. The long arc of contact between the wheel and the work increases the cutting forces and the power required. Therefore, the machine tools to perform this type of grinding must be specially designed with high static and dynamic stability, stick-slip-free ways, adequate damping, increased horsepower, infinitely variable spindle speed, variable but extremely consistent table feed (especially in the low ranges), high-pressure cooling systems, integrated devices for dressing the grinding wheels, and specially designed (soft with open structure) grinding wheels. The process is mainly being applied to grinding deep slots with straight parallel sides or to grinding complex profiles in difficult-to-grind materials. The process is capable of producing extreme precision at relatively high metal removal rates. Because the process can operate at relatively low surface temperatures, the surface integrity of the metals being ground is good.

However, in CFG, the grinding wheels must maintain their initial profile much longer, so continuous dressing is used that is form-truing and dressing the grinding wheel throughout the process rather than between cycles. Continuous crush dressing results in higher MRRs, improved dimensional accuracy and form tolerance, reduced grinding

TABLE 28-5 Starting Conditions for CBN Grinding

Grinding Variable	Conventional Grinding	Creep Feed Grinding	High-speed Grinding
Wheel speed (fpm)	5500–9500 versus 4500–6500 vitrified	5000–9000 versus 3000–5000	12000–25000
Table speed (fpm)	80–150	0.5–5	5–20
Feed (f_t) in./pass	0.0005–0.0015	0.100–0.250	250–.500
Grinding fluids	10% heavy-duty soluble oil or 3–5% light-duty soluble for light feeds	Sulfurized or sulfochlorinated straight grinding oil applied at 80 to 100 gal/min at 100 psi or more	

forces (and power), and reduced thermal effects while sacrificing wheel wear. Creep feed grinding eliminates preparatory operations such as milling or broaching, since profiles are ground into the solid workpiece. This can result in significant savings in unit part costs.

Grinding machines that are used for precision work have certain important characteristics that permit them to produce parts having close dimensional tolerances. They are constructed very accurately, with heavy, rigid frames to ensure permanency of alignment. Rotating parts are accurately balanced to avoid vibration. Spindles are mounted in very accurate bearings, usually of the preloaded ball-bearing type. Controls are provided so that all movements that determine dimensions of the workpiece can be made with accuracy—usually to 0.001 or 0.00001 in.

The abrasive dust that results from grinding must be prevented from entering between moving parts. All ways and bearings must be fully covered or protected by seals. If this is not done, the abrasive dust between moving parts becomes embedded in the softer of the two, causing it to act as lap and abrade the harder of the two surfaces, resulting in permanent loss of accuracy.

These special characteristics add considerably to the cost of these machines and require that they be operated by trained personnel. Production-type grinders are more fully automated and have higher metal removal rates and excellent dimensional accuracy. Fine surface finish can be obtained very economically.

CYLINDRICAL GRINDING

Center-type cylindrical grinding is commonly used for producing external cylindrical surfaces. Figures 28-14 and Figure 28-21 show the basic principles and motions of this process. The grinding wheel revolves at an ordinary cutting speed, and the workpiece rotates on centers at a much slower speed, usually from 75 to 125 ft/min. The grinding wheel and the workpiece move in opposite directions at their point of contact. The depth of cut is determined by infeed of the wheel or workpiece. Because this motion also determines the finished diameter of the workpiece, accurate control of this movement is required. Provision is made to traverse the workpiece with the wheel, or the work can be reciprocated past the wheel. In very large grinders, the wheel is reciprocated because of the massiveness of the work. For form or plunge grinding, the detail of the wheel is maintained by periodic crush roll dressing.

A *plain center-type cylindrical grinder* is shown in Figure 28-21. On this type the work is mounted between headstock and tailstock centers. Solid dead centers are always used in the tailstock, and provision is usually made so that the headstock center can be operated either dead or alive. High-precision work is usually ground with a dead headstock center, because this eliminates any possibility that the workpiece will run out of round due to any eccentricity in the headstock.

The table assembly can be reciprocated, in most cases, by using a hydraulic drive. The speed can be varied, and the length of the movement can be controlled by means of adjustable trip dogs.

Infeed is provided by movement of the wheelhead at right angles to the longitudinal axis of the table. The spindle is driven by an electric motor that is also mounted on the wheelhead. If the infeed movement is controlled manually by some type of vernier drive to provide control to 0.001 in. or less, the machine is usually equipped with digital readout equipment to show the exact size being produced. Most production-type grinders have automatic infeed with retraction when the desired size has been obtained. Such machines are usually equipped with an automatic diamond wheel-truing device that dresses the wheel and resets the measuring element before grinding is started on each piece.

The longitudinal traverse should be about one-fourth to three-fourths of the wheel width for each revolution of the work. For light machines and fine finishes, it should be held to the smaller end of this range. The depth of cut (infeed) varies with the purpose of the grinding operation and the finish desired. When grinding is done to obtain accurate size, infeeds of 0.002 to 0.004 in. are commonly used for roughing cuts. For finishing, the infeed is reduced to 0.00025 to 0.0005 in. The design allowance for grinding should be from 0.005 to 0.010 in. on short parts and on parts that are not to be hardened. On long or large parts and on work that is to be hardened, a grinding allowance of from

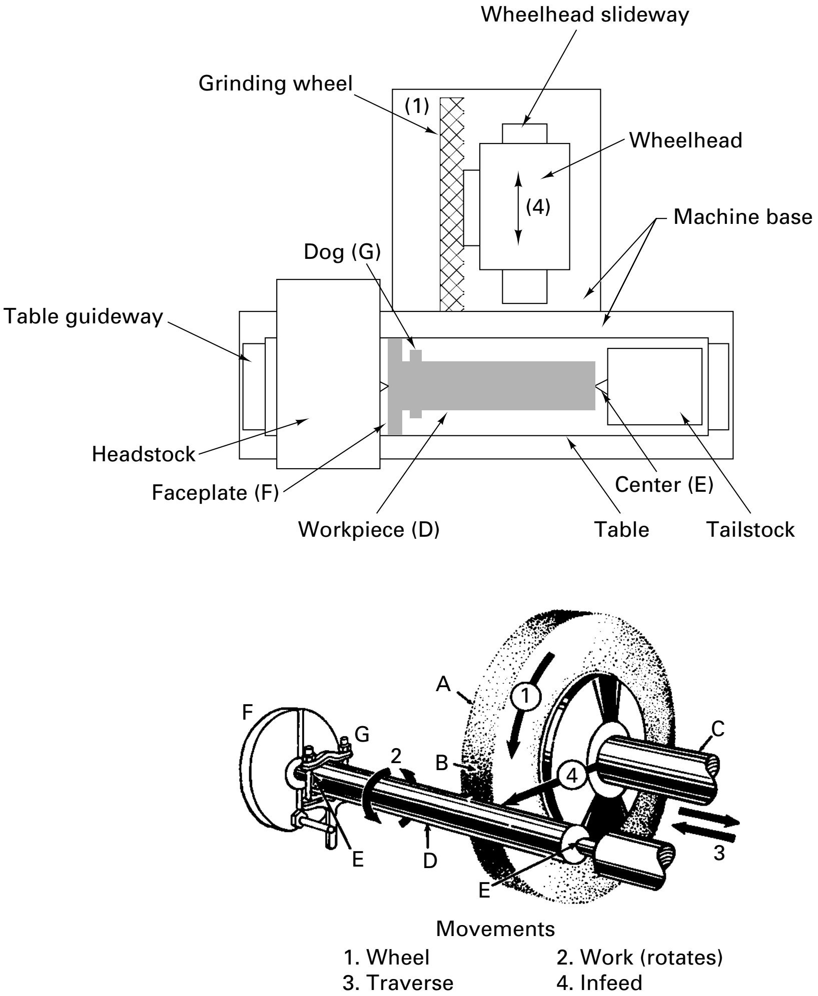

FIGURE 28-21 Cylindrical grinding between centers.

0.015 to 0.030 in. is desirable. When grinding is used primarily for metal removal (called abrasive machining), infeeds are much higher, 0.020 to 0.040 in. being common. Continuous downfeed is often used, with rates up to 0.100 in./min being common.

Grinding machines are available in which the workpiece is held in a chuck for grinding both external and internal cylindrical surfaces. *Chucking-type external grinders* are production-type machines for use in rapid grinding of relatively short parts, such as ball-bearing races. Both chucks and collets are used for holding the work, the means dictated by the shape of the workpiece and rapid loading and removal.

In chucking-type internal grinding machines, the chuck-held workpiece revolves, and a relatively small, high-speed grinding wheel is rotated on a spindle arranged so that it can be reciprocated in and out of the workpiece. Infeed movement of the wheelhead is normal to the axis of rotation of the work (Figure 28-21).

CENTERLESS GRINDING

Centerless grinding makes it possible to grind both external and internal cylindrical surfaces without requiring the workpiece to be mounted between centers or in a chuck. This eliminates the requirement of center holes in some workpieces and the necessity for mounting the workpiece, thereby reducing the cycle time.

The principle of *centerless external grinding* is illustrated in Figure 28-22. Two wheels are used. The larger one operates at regular grinding speeds and does the actual grinding. The smaller wheel is the *regulating* wheel. It is mounted at an angle to the plane of the grinding wheel. Revolving at a much slower surface speed—usually 50 to 200 ft/min—the regulating wheel controls the rotation and longitudinal motion of the workpiece and is a usually a plastic- or rubber-bonded wheel with a fairly wide face.

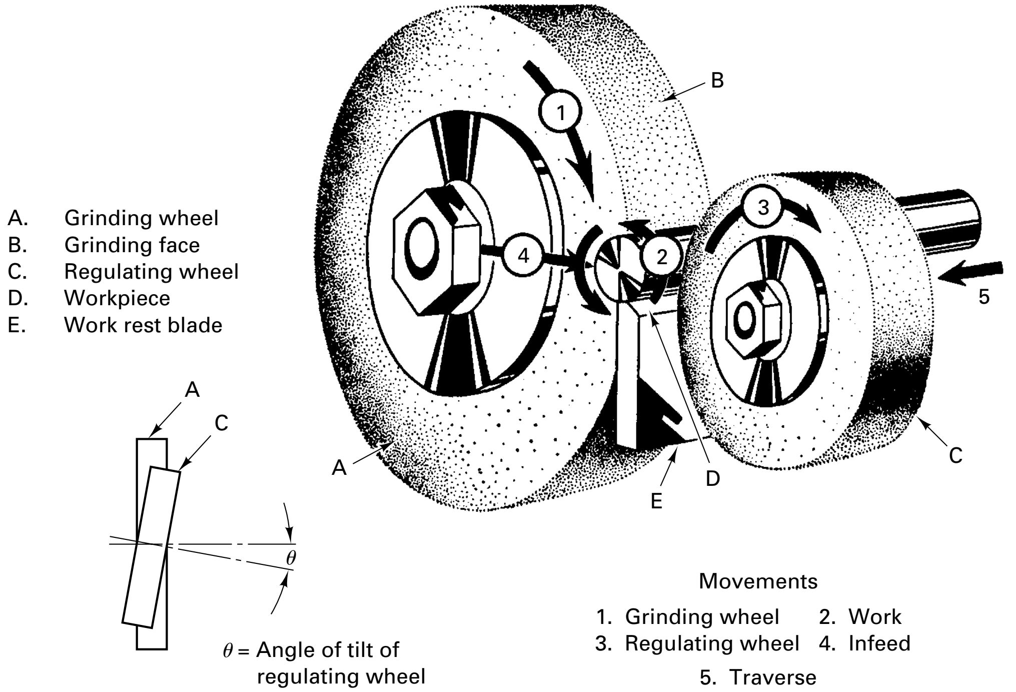

FIGURE 28-22 Centerless grinding showing the relationship among the grinding wheel, the regulating wheel, and the workpiece in centerless method. *(Courtesy of Carborundum Company.)*

The workpiece is held against the work-rest blade by the cutting forces exerted by the grinding wheel and rotates at approximately the same surface speed as that of the regulating wheel. This axial feed is calculated approximately by the equation

$$F = ND \sin \phi \tag{28-1}$$

where

F = feed (mm/min or in./min)

D = diameter of the regulating wheel (mm or in.)

N = revolutions per minute of the regulating wheel

ϕ = angle of inclination of the regulating wheel

Centerless grinding has several important advantages:

1. It is very rapid; infeed centerless grinding is almost continuous.
2. Very little skill is required of the operator.
3. It can often be made automatic (single-cycle automatic).
4. Where the cutting occurs, the work is fully supported by the work rest and the regulating wheel. This permits heavy cuts to be made.
5. Because there is no distortion of the workpiece, accurate size control is easily achieved.
6. Large grinding wheels can be used, thereby minimizing wheel wear.

Thus centerless grinding is ideally suited to certain types of mass-production operations. The major disadvantages are as follows:

1. Special machines are required that can do no other type of work.
2. The work must be round—no flats, such as keyways, can be present.
3. Its use on work having more than one diameter or on curved parts is limited.
4. In grinding tubes, there is no guarantee that the OD and Internal Diameter (ID) are concentric.

Special centerless grinding machines are available for grinding balls and tapered workpieces. The centerless grinding principle can also be applied to internal grinding, but the external surface of the cylinder must be finished accurately before the internal operation is started. However, it assures that the internal and external surfaces will be concentric. The operation is easily mechanized for many applications.

SURFACE GRINDING MACHINES

Surface grinding machines are used primarily to grind flat surfaces. However formed, irregular surfaces can be produced on some types of surface grinders by use of a formed wheel. There are four basic types of surface grinding machines, differing in the movement of their tables and the orientation of the grinding wheel spindles (Figure 28-23):

1. Horizontal spindle and reciprocating table
2. Vertical spindle and reciprocating table
3. Horizontal spindle and rotary table
4. Vertical spindle and rotary table

The most common type of surface grinding machine has a reciprocating table and horizontal spindle (Figures 28-19). The table can be reciprocated longitudinally either by handwheel or by hydraulic power. The wheelhead is given transverse (cross-feed) motion at the end of each table motion, again either by handwheel or by hydraulic power feed. Both the longitudinal and transverse motions can be controlled by limit switches. Infeed or downfeed on such grinders is controlled by handwheels or automatically. The size of such machines is determined by the size of the surface that can be ground.

In using such machines, the wheel should overtravel the work at both ends of the table reciprocation, so as to prevent the wheel from grinding in one spot while the table is being reversed. The transverse or cross-feed motion should be one-fourth to three-fourths of the wheel width between each stroke.

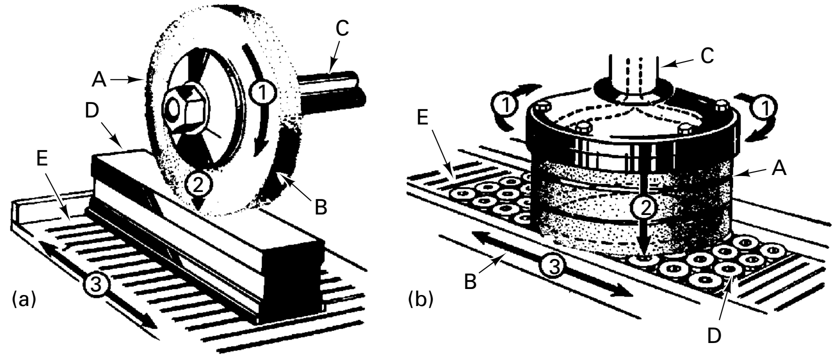

Movements
1. Wheel 2. Infeed
3. Work table traverse

A. Grinding wheel
B. Grinding face
C. Shaft
D. Workpiece
E. Magnetic chuck on table

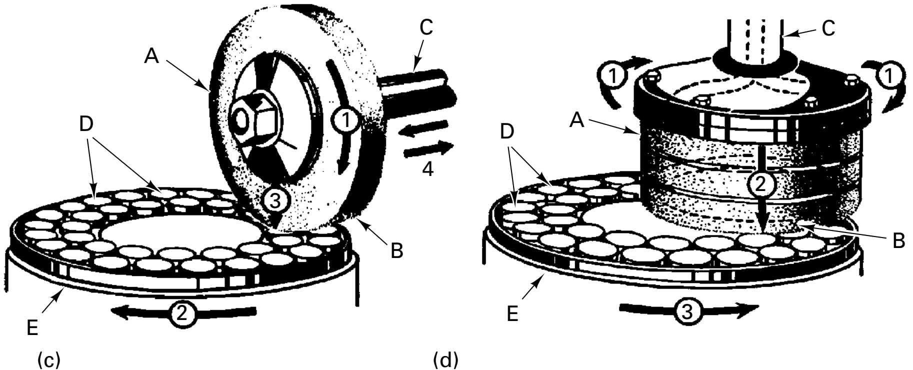

Movements
1. Wheel 2. Work table rotation
3. Infeed 4. Cross feed

Movements
1. Wheel 2. Infeed
3. Work table rotation

FIGURE 28-23 Surface grinding: (a) horizontal surface grinding and reciprocating table; (b) vertical spindle with reciprocating table; (c) and (d) both horizontal- and vertical-spindle machines can have rotary tables. *(Courtesy of Carborundum Company.)*

Vertical-spindle reciprocating-table surface grinders differ basically from those with horizontal spindles only in that their spindles are vertical and that the wheel diameter must exceed the width of the surface to be ground. Usually, no transverse motion of either the table or the wheelhead is provided. Such machines can produce very flat surfaces.

Rotary-table surface grinders can have either vertical or horizontal spindles, but those with horizontal spindles are limited in the type of work they will accommodate and therefore are not used to a great extent. *Vertical-spindle rotary-table surface grinders* are primarily production-type machines. They frequently have two or more grinding heads, and therefore both rough grinding and finish grinding are accomplished in one rotation of the workpiece. The work can be held either on a magnetic chuck or in special fixtures attached to the table.

By using special rotary feeding mechanisms, machines of this type often are made automatic. Parts are dumped on the rotary feeding table and fed automatically onto work-holding devices and moved past the grinding wheels. After they pass the last grinding head, they are automatically unloaded.

DISK-GRINDING MACHINES

Disk grinders have relatively large side-mounted abrasive disks. The work is held against one side of the disk for grinding. Both single- and double-disk grinders are used; in the latter type the work is passed between the two disks and is ground on both sides simultaneously. On these machines, the work is always held and fed automatically. On small, single-disk grinders the work can be held and fed by hand while resting on a supporting table. Although manual disk grinding is not very precise, flat surfaces can be obtained quite rapidly with little or no tooling cost. On specialized, production-type machines, excellent accuracy can be obtained very economically.

TOOL AND CUTTER GRINDERS

Simple, single-point tools are often sharpened by hand on bench or pedestal grinders (*off-hand grinding*). More complex tools, such as milling cutters, reamers, hobs, and single-point tools for production-type operations require more sophisticated grinding machines, commonly called *universal tool and cutter grinders*. These machines are similar to small universal cylindrical center-type grinders, but they differ in four important respects:

1. The headstock is not motorized.
2. The headstock can be swiveled about a horizontal as well as a vertical axis.
3. The wheelhead can be raised and lowered and can be swiveled through at 360° rotation about a vertical axis.
4. All table motions are manual. No power feeds being provided.

Specific rake and clearance angles must be created, often repeatedly, on a given tool or on duplicate tools. Tool and cutter grinders have a high degree of flexibility built into them so that the required relationships between the tool and the grinding wheel can be established for almost any type of tool. Although setting up such a grinder is quite complicated and requires a highly skilled worker, after the setup is made for a particular job, the actual grinding is accomplished rather easily. Figure 28-24 shows several typical setups on a tool and cutter grinder.

Hand-ground cutting tools are not accurate enough for automated machining processes. Many numerically controlled (NC) machine tools have been sold on the premise that they can position work to very close tolerances—within ± 0.0001 to 0.0002 in.—only to have the initial workpieces produced by those machines out of tolerance by as much as 0.015 to 0.020 in. In most instances, the culprit was a poorly ground tool. For example, a twist drill with a point ground 0.005 in. off-center can “walk” as much as 0.015 in., thus causing poor hole location. Many companies are turning to computer numeric control (CNC) grinders to handle the regrinding of their cutting tools. A six-axis CNC grinder is capable of restoring the proper tool angles (rake and clearance), concentricity, cutting edges, and dimensional size.

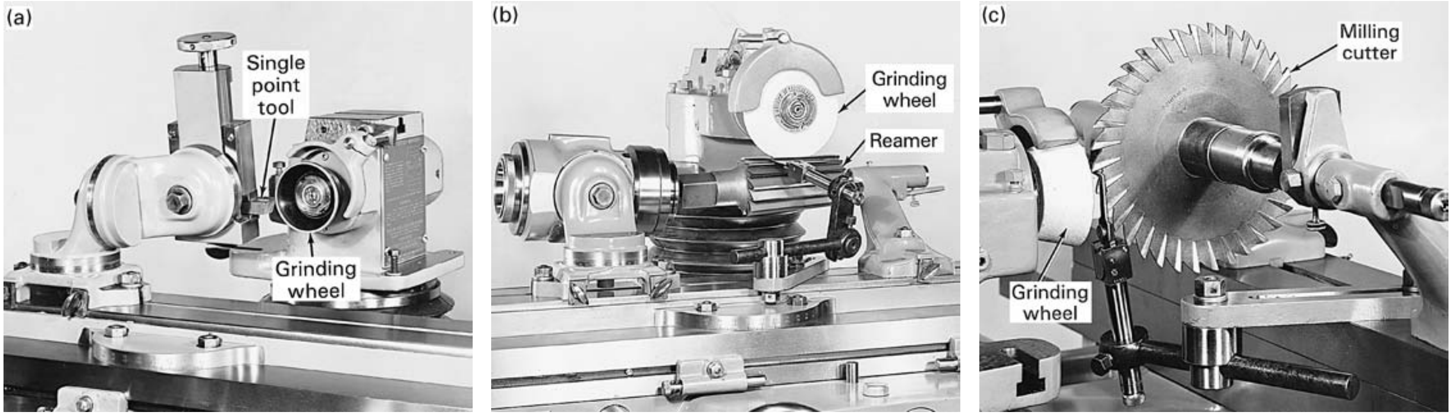

FIGURE 28-24 Three typical setups for grinding single- and multiple-edge tools on a universal tool and cutter grinder. (a) Single-point tool is held in a device that permits all possible angles to be ground. (b) Edges of a large hand reamer are being ground. (c) Milling cutter is sharpened with a cupped grinding wheel.

MOUNTED WHEELS AND POINTS

Mounted wheels and points are small grinding wheels of various shapes that are permanently attached to metal shanks that can be inserted in the chucks of portable, high-speed electric or air motors. They are operated at speeds up to 100,000 rpm, depending on their diameters, and are used primarily for deburring and finishing in mold and die work. Several types are shown in Figure 28-25.

COATED ABRASIVES

Coated abrasives are being used increasingly in finishing both metal and nonmetal products. These are made by gluing abrasive grains onto a cloth or paper backing (Figure 28-26). Synthetic abrasives—aluminum oxide, silicon carbide, aluminum, zirconia, CBN, and diamond—are used most commonly, but some natural abrasives—sand, flint, garnet, and emery—also are employed. Various types of glues are utilized to attach the abrasive grains to the backing, usually compounded to allow the finished product to have some flexibility.

Coated abrasives are available in sheets, rolls, endless belts, and disks of various sizes. Some of the available forms are shown in Figure 28-26. Although the cutting action of coated abrasives basically is the same as with grinding wheels, there is one major difference: they have little tendency to be self-sharpened when dull grains are pulled from the backing. Consequently, when the abrasive particles become dull or the belt loaded, the belt must be replaced. Finer grades result in finer first cuts but slower material removal rates (MRR). This versatile process is now widely used for rapid stock removal as well as fine surface finishing.

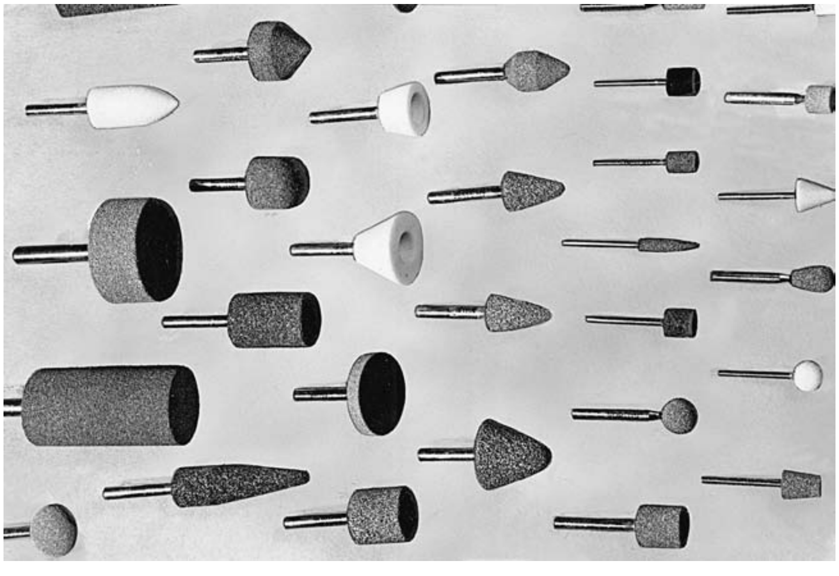

FIGURE 28-25 Examples of mounted abrasive wheels and points. *(Courtesy of Norton Company.)*

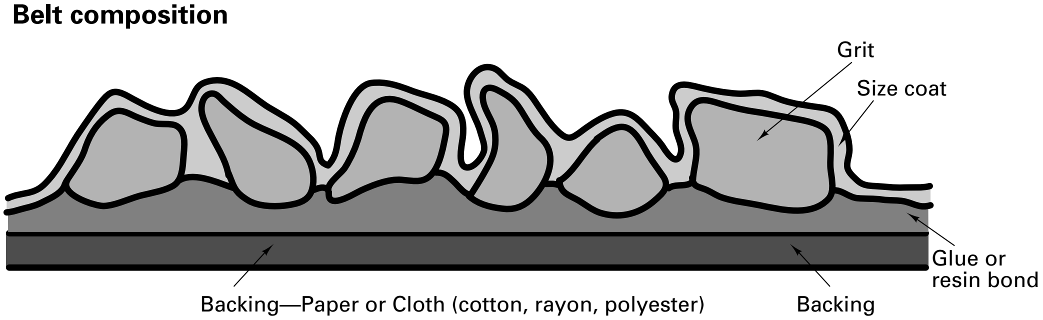

Grit Size—grade

vs	Approx.	Finish (rms)
24	300	μin.
36	250	"
50	140	"
80	125	"
120	60-80	"
150	40-60	"

Bonds

Name	Make coat	Size coat	Backing
Glue bond	Glue	Glue	Non WP
Modified glue	Mod. glue	Mod. glue	"
Resin over glue	Glue	Resin	"
Resin over resin	Resin	Resin	"
Waterproof	Resin	Resin	WP

WP = waterproof

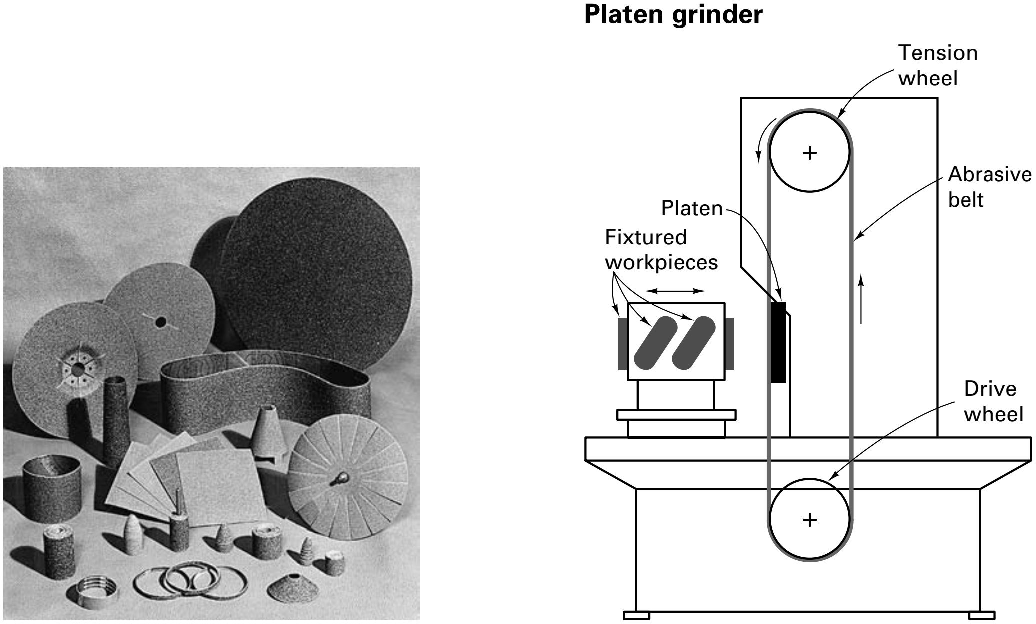

FIGURE 28-26 Belt composition for coated abrasives (top). Platen grinder (right) and examples of belts and disks for abrasive machining.

■ 28.6 HONING

Honing is a stock-removal process that uses fine abrasive stones to remove very small amounts of metal. Cutting speed is much lower than that of grinding. The process is used to size and finish bored holes, remove common errors left by boring (taper, waviness, and tool marks), or remove the tool marks left by grinding. The amount of metal removed is typically about 0.005 in. or less. Although honing is occasionally done by hand, as in finishing the face of a cutting tool, it usually is done with special equipment. Most honing is done on internal cylindrical surfaces, such as automobile cylinder walls. The honing stones are usually held in a honing head, with the stones being held against the work with controlled light pressure. The honing head is not guided externally but, instead, *floats* in the hole, being guided by the work surface (Figure 28-27).

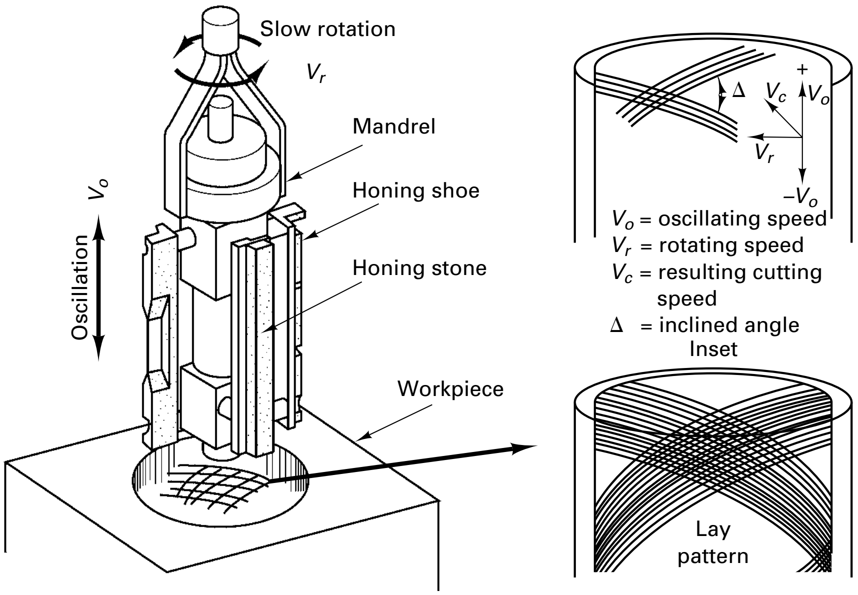

FIGURE 28-27 Schematic of honing head showing the manner in which the stones are held. The rotary and oscillatory motions combine to produce a crosshatched lay pattern. Typical values for V_c and P_s are given below.

For:	Honing Parameters	Conventional Abrasives	Diamonds	CBN
High MRR	V_c (m/min)	20-30	40-70	35-90
	P_s (N/mm^2)	1-2	2-8	2-4
Best-quality service	V_c (m/min)	5-30	40-70	20-60
	P_s (N/mm^2)	0.5-1.5	1.0-3.0	1.0-2.0

The stones are given a complex motion so as to prevent a single grit from repeating its path over the work surface. Rotation is combined with an oscillatory axial motion. For external and flat surfaces, varying oscillatory motions are used. The length of the motions should be such that the stones extend beyond the work surface at the end. A cutting fluid is used in virtually all honing operations. The critical process parameters are rotational speed, V_r, oscillation speed, V_o, the length and position of stroke, and the honing stick pressure. V_c and the inclination angle are both products of V_o and V_r

Virtually all honing is done with stones made by bonding together various fine artificial abrasives. *Honing stones* differ from grinding wheels in that additional materials, such as sulfur, resin, or wax, are often added to the bonding agent to modify the cutting action. The abrasive grains range in size from 80 to 600 grit. The stones are equally spaced about the periphery of the tool. Reference values for V_c and honing stick pressure, P_s, for various abrasives are shown in Figure 28-27.

Single- and multiple-spindle honing machines are available in both horizontal and vertical types. Some are equipped with special sensitive measuring devices that collapse the honing head when the desired size has been reached.

For honing single, small, internal cylindrical surfaces, a procedure is often used wherein the workpiece is manually held and reciprocated over a rotating hone. If the volume of work is sufficient, honing is a fairly inexpensive process. A complete honing cycle, including loading and unloading the work, is often less than one minute. Size control within 0.0003 in. is achieved routinely.

■ 28.7 SUPERFINISHING

Superfinishing is a variation of honing that is typically used on flat surfaces. The process is:

1. Very light, controlled pressure, 10 to 40 psi
2. Rapid (over 400 cycles per minute), short strokes—less than $^1/_4$ in.
3. Stroke paths controlled so that a single grit never traverses the same path twice
4. Copious amounts of low-viscosity lubricant-coolant flooded over the work surface

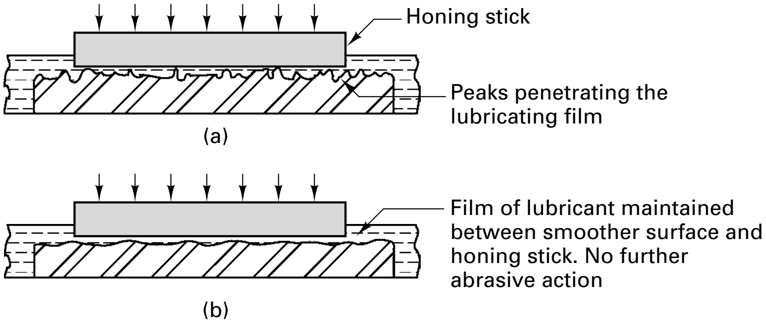

FIGURE 28-28 In superfinishing and honing, a film of lubricant is established between the work and the abrasive stone as the work becomes smoother.

This procedure, illustrated in Figure 28-28, results in surfaces of very uniform, repeatable smoothness.

Superfinishing is based on the phenomenon that a lubricant of a given viscosity will establish and maintain a separating, lubricating film between two mating surfaces if their roughness does not exceed a certain value and if a certain critical pressure, holding them apart, is not exceeded. Consequently, as the minute peaks on a surface are cut away by the honing stone, applied with a controlled pressure, a certain degree of smoothness is achieved. The lubricant establishes a continuous film between the stone and the workpiece and separates them so that no further cutting action occurs. Thus, with a given pressure, lubricant, and honing stone, each workpiece is honed to the same degree of smoothness.

Superfinishing is applied to both cylindrical and plane surfaces. The amount of metal removed usually is less than 0.002 in., most of it being the peaks of the surface roughness. Copious amounts of lubricant-coolant maintain the work at a uniform temperature and wash away all abraded metal particles to prevent scratching.

LAPPING

Lapping is an abrasive surface finishing process wherein fine abrasive particles are *charged* (caused to become embedded) into a soft material, called a *lap*. The material of the lap may range from cloth to cast iron or copper, but it is always softer than the material to be finished, being only a holder for the hard abrasive particles. Lapping is applied to both metals and nonmetals.

As the charged lap is rubbed against a surface, the abrasive particles in the surface of the lap remove small amounts of material from the surface to be machined. Thus the abrasive does the cutting, and the soft lap is not worn away because the abrasive particles become embedded in its surface instead of moving across it. This action always occurs when two materials rub together in the presence of a fine abrasive: the softer one forms a lap, and the harder one is abraded away.

In lapping, the abrasive is usually carried between the lap and the work surface in some sort of a vehicle, such as grease, oil, or water. The abrasive particles are from 120 grit up to the finest powder sizes. As a result, only very small amounts of metal are removed, usually considerably less than 0.001 in. Because it is such a slow metal removing process, lapping is used only to remove scratch marks left by grinding or honing, or to obtain very flat or smooth surfaces, such as are required on gage blocks or for liquid tight seals where high pressures are involved.

Materials of almost any hardness can be lapped. However, it is difficult to lap soft materials because the abrasive tends to become embedded. The most common lap material is fine-grained cast iron. Copper is used quite often and is the common material for lapping diamonds. For lapping hardened metals for metallographic examination, cloth laps are used.

Lapping can be done either by hand or by special machines. In hand lapping, the lap is flat, similar to a surface plate. Grooves are usually cut across the surface of a lap to collect the excess abrasive and chips. The work is moved across the surface of the lap, using an irregular, rotary motion, and is turned frequently to obtain a uniform cutting action.

In lapping machines for obtaining flat surfaces, workpieces are placed loosely in holders and are held against the rotating lap by means of floating heads. The holders, rotating slowly, move the workpieces in an irregular path. When two parallel surfaces are to be produced, two laps may be employed, one rotating below and the other above the workpieces.

Various types of lapping machines are available for lapping round surfaces. A special type of centerless lapping machine is used for lapping small cylindrical parts, such as piston pins and ball-bearing races.

Because the demand for surfaces having only a few micrometers of roughness on hardened materials has become quite common, the use of lapping has increased greatly. However, it is a very slow method of removing metal, obviously costly compared with other methods, and should not be specified unless such a surface is absolutely necessary.

■ 28.8 FREE ABRASIVES

ULTRASONIC MACHINING

Ultrasonic machining (USM), sometimes called *ultrasonic impact grinding*, employs an ultrasonically vibrating tool to impel the abrasives in a slurry at high velocity against the workpiece. The tool is fed into the part as it vibrates along an axis parallel to the tool feed at an amplitude on the order of several thousandths of an inch and a frequency of 20 kHz. As the tool is fed into the workpiece, a negative of the tool is machined into the workpiece. The cutting action is performed by the abrasives in the slurry, which is continuously flooded under the tool. The slurry is loaded up to 60% by weight with abrasive particles. Lighter abrasive loadings are used to facilitate the flow of the slurry for deep drilling (up to 2 in. deep). Boron carbide, aluminum oxide, and silicon carbide are the most commonly used abrasives in grit sizes ranging from 400 to 2000. The amplitude of the vibration should be set approximately to the size of the grit. The process can use shaped tools to cut virtually any material but is most effective on materials with hardnesses greater than R_C 40, including brittle and nonconductive materials such as glass. Figure 28-29 shows a simple schematic of this process.

USM uses piezoelectric or magnetostrictive transducers to impart high-frequency vibrations to the tool holder and tool. Abrasive particles in the slurry are accelerated to great speed by the vibrating tool. The tool materials are usually brass, carbide, mild

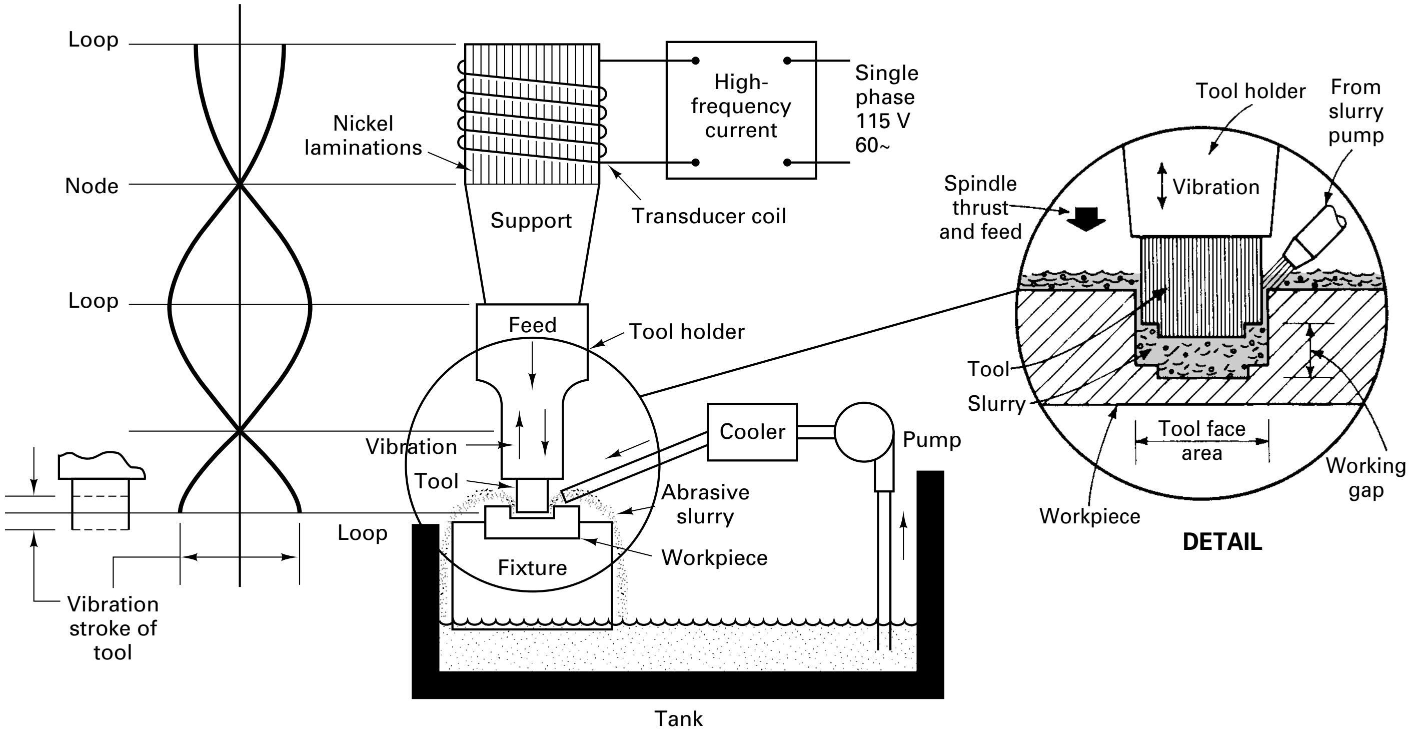

FIGURE 28-29 Sinking a hole in a workpiece with an ultrasonically vibrating tool driving an abrasive slurry.

steel, or tool steel and will vary in tool wear depending on their hardness. Wear ratios (workpiece material removed versus tool material lost) from 1:1 (for tool steel) to 100:1 (for glass) are possible. Because of the high number of cyclic loads, the tool must be strong enough to resist fatigue failure.

The cut will be oversize by about twice the size of the abrasive particles being used, and holes will be tapered, usually limiting the hole depth-to-diameter ratio to about 3:1. Surface roughness is controlled by the size of the abrasive particles (finer finish with smaller particles). Holes, slots, or shaped cavities can be readily eroded in any hard material—conductive or nonconductive, metallic, ceramic, or composite. Advantages of the process include that it is one of the few machining methods capable of machining glass. Also, it is the safest machining method. Skin is impervious to the process because of its ductility. High-pitched noise can be a problem due to secondary vibrations. In addition to machining, ultrasonic energy has also been employed for coining, lapping, deburring, and broaching. Plastics can be welded using ultrasonic energy.

WATERJET CUTTING AND ABRASIVE WATERJET MACHINING

Waterjet cutting (WJC), also known as *waterjet machining* or *hydrodynamic machining*, uses a high-velocity fluid jet impinging on the workpiece to perform a slitting operation (Figure 28-30). Water is ejected from a nozzle orifice at high pressure (up to 60,000 psi). The jet is typically 0.003 to 0.020 in. in diameter and exits the orifice at velocities up to 3000 ft/sec. Key process parameters include water pressure, orifice diameter, water flow rate, and working distance (distance between the workpiece and the nozzle).

Nozzle materials include synthetic sapphire, due to its machinability and resistance to wear. Tool life on the order of several hundred hours is typical. Mechanisms for tool failure include chipping from contaminants or constriction due to mineral deposits. This emphasizes the need for high levels of filtration prior to pressure intensification. In the past, long-chain polymers were added to the water to make the jet more coherent (i.e., not come out of the jet dispersed). However, with proper nozzle design, a tight, coherent water jet may be produced without additives.

The advantages of WJC include the ability to cut materials without burning or crushing the material being cut. Figure 28-30 shows a comparison (end view) of cutting corrugated boxboard with a mechanical knife and with WJC. The mechanism for material removal is simply the impinging pressure of the water exceeding the compressive strength of the material. This limits the materials that can be cut by the process to leather, plastics, and other soft nonmetals, which is the major disadvantage of the process. Alternative fluids (alcohol, glycerine, cooking oils) have been used in processing meats, baked goods, and frozen foods. Other disadvantages include that the process is noisy and requires operators to have hearing protection.

The majority of the metalworking applications for waterjet cutting require the addition of abrasives. This process is known as *abrasive waterjet cutting* (AWC). A full range of materials, including metals, plastics, rubber, glass, ceramics, and composites, can be machined by AWC. Cutting feed rates vary from 20 in./min for acoustic tile to 50 in./min for epoxies and 500 in./min for paper products.

Abrasives are added to the waterjet in a mixing chamber on the downstream side of the waterjet orifice. A single, central waterjet with side feeding of abrasives into a mixing chamber is shown in Figure 28-30. In the mixing chamber, the momentum of the water is transferred to the abrasive particles, and the water and particles are forced out through the AWC nozzle orifice, also called the mixing tube. This design can be made quite compact; however, it also experiences rapid wear in the mixing tube. An alternate configuration is to feed the abrasives from the center of the nozzle with a converging set of angled water jets imparting momentum to the abrasives. This nozzle design produces better mixing of the water and abrasives as well as increased nozzle life. The inside diameter of the mixing tube is normally from 0.04 to 0.125 in. in diameter. These tubes are normally made of carbide.

Generally, the kerf of the cut is about 0.001 in. greater than the nozzle orifice. AWC requires control of additional process parameters over waterjet machining, including abrasive material (density, hardness, shape), abrasive size or grit, abrasive flow rate (pounds per minute), abrasive feed mechanism (pressurized or suction), and AWC

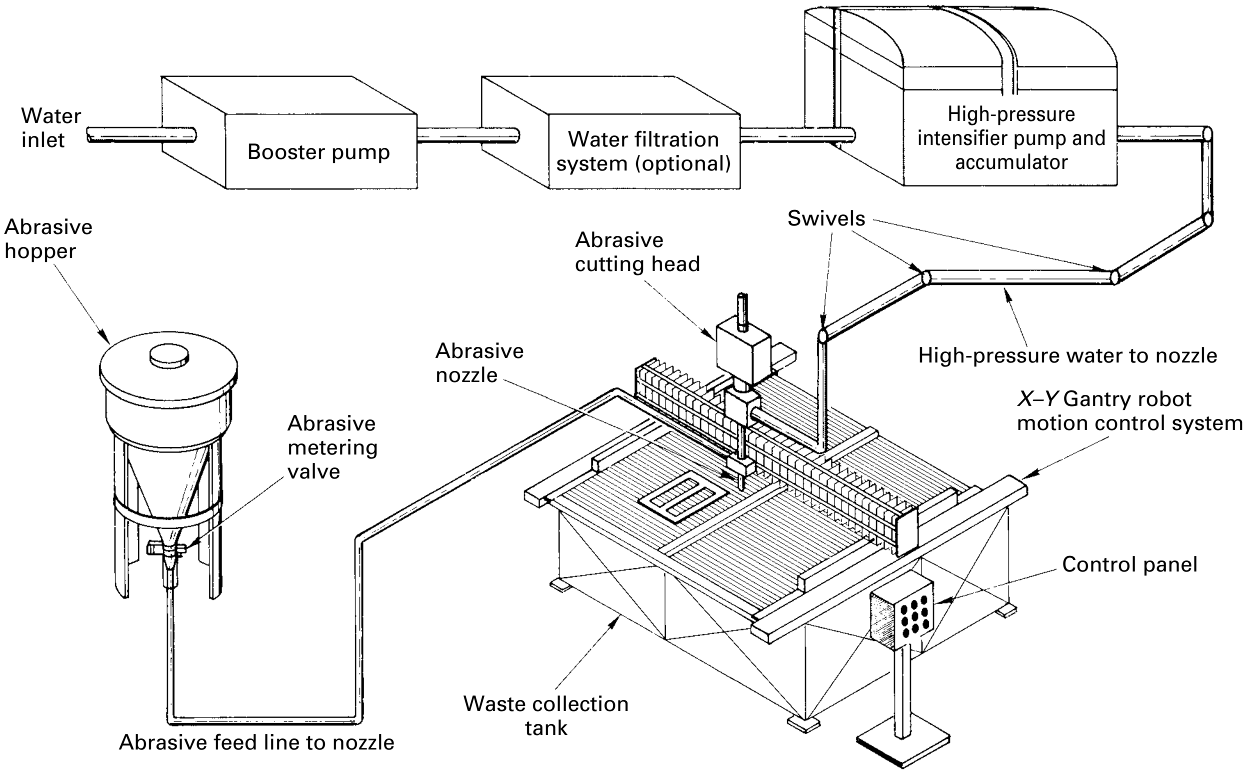

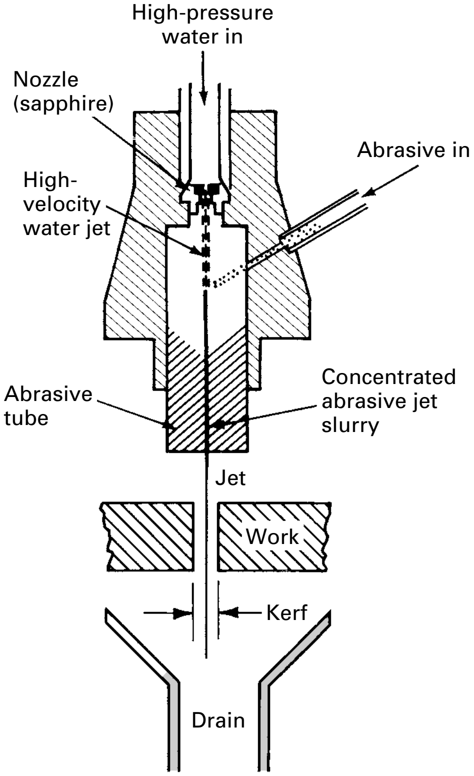

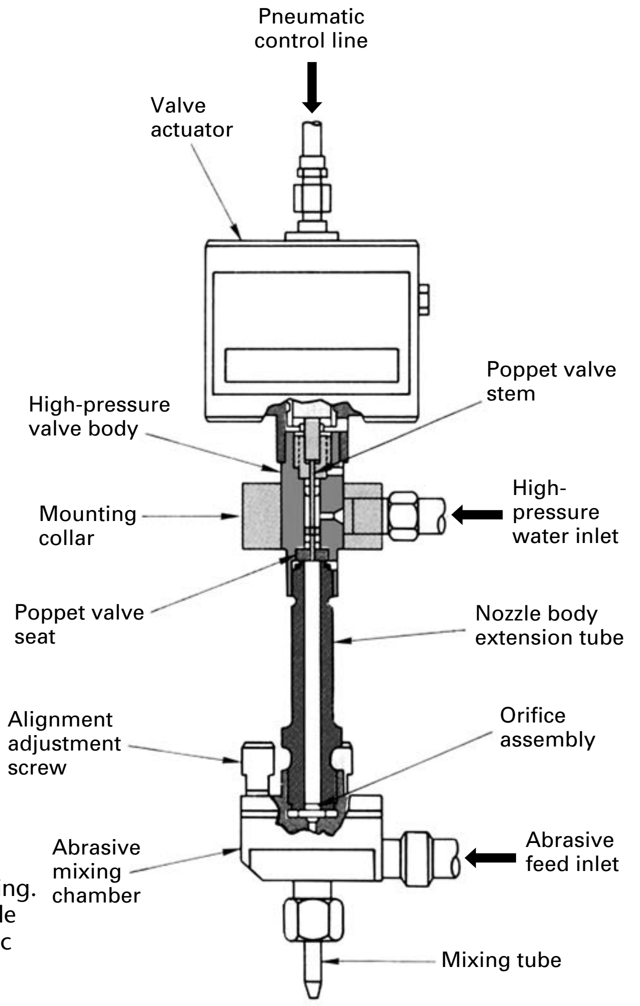
Abrasive cutting head

FIGURE 28-30 Schematic diagram of hydrodynamic jet machining. The intensifier elevates the fluid to the desired nozzle pressure while the accumulator smoothes out the pulses in the fluid jet. Schematic of an abrasive waterjet machining nozzle is shown on the right.

nozzle (design, orifice diameter, and material). Typical AWC systems operate under the following conditions: water pressures of 30,000 to 50,000 psi; water orifice diameters from 0.01 to 0.022 in.; and working distances of 0.02 to 0.06 in. Working distances are much smaller than in WJC to minimize the dispersion of the abrasive water jet prior to entering the material. Abrasive materials used include garnet, silica, silicon carbide, or aluminum oxide. Abrasive grit sizes range from 60 to 120 and abrasive flow rates from 0.5 to 3 lb/min. For many applications, the AWC tool is combined with a CNC controlled *X–Y* table, which permits contouring and surface engraving.

AWC can be used to cut any material through the appropriate choice of the abrasive, waterjet pressure, and feed rate. Table 28-6 gives cutting speeds for various metals. The ability of the abrasive waterjet to cut through thick materials (up to 8 in.) is attributed to the reentrainment of abrasive particles in the jet by the workpiece material. AWC is particularly suited for composites because the cutting rates are reasonable and they do not delaminate the layered material. In particular, AWC is used in the airplane industry to cut carbon-fiber composite sections of the airplane after autoclaving.

TABLE 28-6 Typical Values for Through-cutting Speeds for Simple Waterjet and Abrasive Waterjet of Machining Metals and Nonmetals.

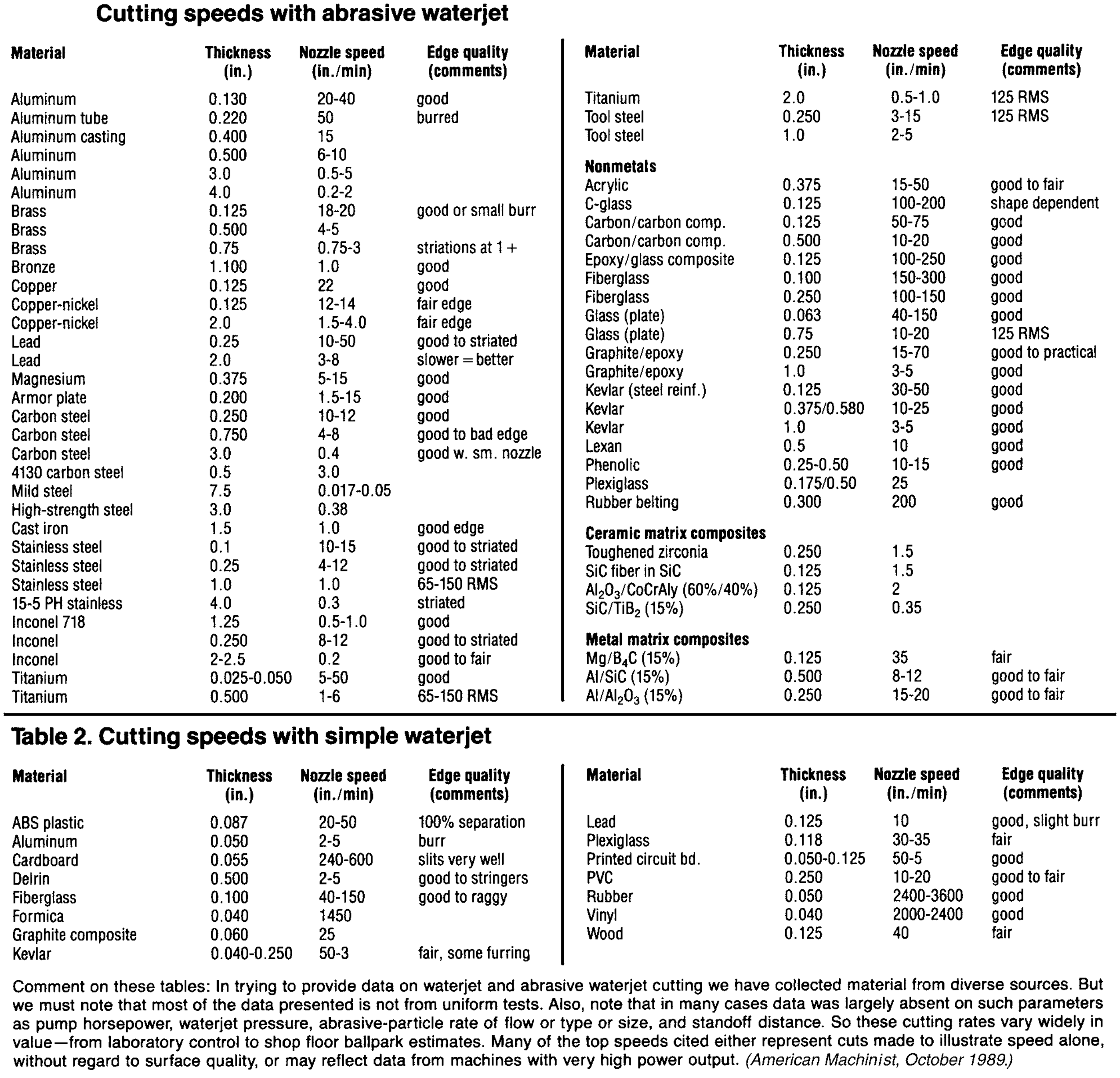

Cutting speeds with abrasive waterjet

Material	Thickness (in.)	Nozzle speed (in./min)	Edge quality (comments)
Aluminum	0.130	20-40	good
Aluminum tube	0.220	50	burred
Aluminum casting	0.400	15	
Aluminum	0.500	6-10	
Aluminum	3.0	0.5-5	
Aluminum	4.0	0.2-2	
Brass	0.125	18-20	good or small burr
Brass	0.500	4-5	
Brass	0.75	0.75-3	striations at 1 +
Bronze	1.100	1.0	good
Copper	0.125	22	good
Copper-nickel	0.125	12-14	fair edge
Copper-nickel	2.0	1.5-4.0	fair edge
Lead	0.25	10-50	good to striated
Lead	2.0	3-8	slower = better
Magnesium	0.375	5-15	good
Armor plate	0.200	1.5-15	good
Carbon steel	0.250	10-12	good
Carbon steel	0.750	4-8	good to bad edge
Carbon steel	3.0	0.4	good w. sm. nozzle
4130 carbon steel	0.5	3.0	
Mild steel	7.5	0.017-0.05	
High-strength steel	3.0	0.38	
Cast iron	1.5	1.0	good edge
Stainless steel	0.1	10-15	good to striated
Stainless steel	0.25	4-12	good to striated
Stainless steel	1.0	1.0	65-150 RMS
15-5 PH stainless	4.0	0.3	striated
Inconel 718	1.25	0.5-1.0	good
Inconel	0.250	8-12	good to striated
Inconel	2-2.5	0.2	good to fair
Titanium	0.025-0.050	5-50	good
Titanium	0.500	1-6	65-150 RMS
Titanium	2.0	0.5-1.0	125 RMS
Tool steel	0.250	3-15	125 RMS
Tool steel	1.0	2-5	
Nonmetals			
Acrylic	0.375	15-50	good to fair
C-glass	0.125	100-200	shape dependent
Carbon/carbon comp.	0.125	50-75	good
Carbon/carbon comp.	0.500	10-20	good
Epoxy/glass composite	0.125	100-250	good
Fiberglass	0.100	150-300	good
Fiberglass	0.250	100-150	good
Glass (plate)	0.063	40-150	good
Glass (plate)	0.75	10-20	125 RMS
Graphite/epoxy	0.250	15-70	good to practical
Graphite/epoxy	1.0	3-5	good
Kevlar (steel reinf.)	0.125	30-50	good
Kevlar	0.375/0.580	10-25	good
Kevlar	1.0	3-5	good
Lexan	0.5	10	good
Phenolic	0.25-0.50	10-15	good
Plexiglass	0.175/0.50	25	
Rubber belting	0.300	200	good
Ceramic matrix composites			
Toughened zirconia	0.250	1.5	
SiC fiber in SiC	0.125	1.5	
Al_2O_3/CoCrAly (60%/40%)	0.125	2	
SiC/TiB_2 (15%)	0.250	0.35	
Metal matrix composites			
Mg/B_4C (15%)	0.125	35	fair
Al/SiC (15%)	0.500	8-12	good to fair
Al/Al_2O_3 (15%)	0.250	15-20	good to fair

Table 2. Cutting speeds with simple waterjet

Material	Thickness (in.)	Nozzle speed (in./min)	Edge quality (comments)
ABS plastic	0.087	20-50	100% separation
Aluminum	0.050	2-5	burr
Cardboard	0.055	240-600	slits very well
Delrin	0.500	2-5	good to stringers
Fiberglass	0.100	40-150	good to raggy
Formica	0.040	1450	
Graphite composite	0.060	25	
Kevlar	0.040-0.250	50-3	fair, some furring
Lead	0.125	10	good, slight burr
Plexiglass	0.118	30-35	fair
Printed circuit bd.	0.050-0.125	50-5	good
PVC	0.250	10-20	good to fair
Rubber	0.050	2400-3600	good
Vinyl	0.040	2000-2400	good
Wood	0.125	40	fair

Comment on these tables: In trying to provide data on waterjet and abrasive waterjet cutting we have collected material from diverse sources. But we must note that most of the data presented is not from uniform tests. Also, note that in many cases data was largely absent on such parameters as pump horsepower, waterjet pressure, abrasive-particle rate of flow or type or size, and standoff distance. So these cutting rates vary widely in value—from laboratory control to shop floor ballpark estimates. Many of the top speeds cited either represent cuts made to illustrate speed alone, without regard to surface quality, or may reflect data from machines with very high power output. *(American Machinist, October 1989.)*

ABRASIVE JET MACHINING

One of the least expensive of the nontraditional processes is *abrasive jet machining* (AJM). AJM removes material by a focused jet of abrasives and is similar in many respects to AWC, with the exception that momentum is transferred to the abrasive particles by a jet of inert gas. Abrasive velocities on the order of 1000 ft/sec are possible with AJM. The small mass of the abrasive particles produces a microscale chipping action on the workpiece material. This makes AJM ideal for processing hard, brittle materials, including glass, silicon, tungsten, and ceramics. It is not compatible with soft, elastic materials.

Key process parameters include working distance, abrasive flow rate, gas pressure, and abrasive type. Working distance and feed rate are controlled by hand. If necessary, a hard mask can be placed on the workpiece to control dimensions. Abrasives are typically smaller than those used in AWC. Abrasives are typically not recycled, since the abrasives are cheap and are used only on the order of several hundred grams per hour. To minimize particulate contamination of the work environment, a dust-collection hood should be used in concert with the AJM system.

DESIGN CONSIDERATIONS IN GRINDING

Almost any shape and size of work can be finished on modern grinding equipment, including flat surfaces, straight or tapered cylinders, irregular external and internal surfaces, cams, antifriction bearing races, threads, and gears. For example, the most accurate threads are formed from solid cylindrical blanks on special thread grinding machines. Gears that must operate without play are hardened and then finish ground to close tolerances. Two important design recommendations are to reduce the area to be ground and to keep all surfaces that are to be ground in the same or parallel planes (Figure 28-31). This is an example of *design for manufacturing* (DFM).

Abrasive machining can remove scale as well as parent metal. Large allowances of material, needed to permit conventional metalcutting tools to cut below hard or abrasive inclusions, are not necessary for abrasive machining. An allowance of 0.015 in. is adequate, assuming, of course, that the part is not warped or out of round. This small allowance requirement results in savings in machining time, in material (often 60% less metal is removed), and in shipping of unfinished parts.

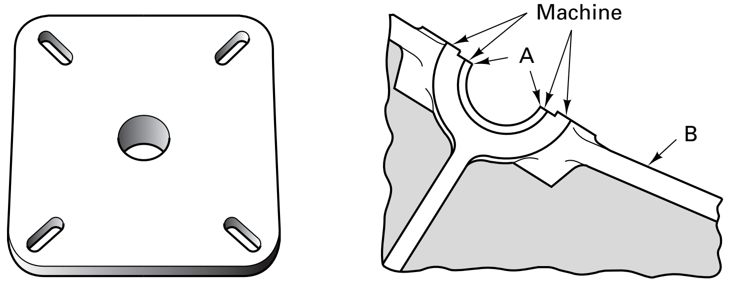

Original design of base plate

Original design of crankshaft bearing bracket

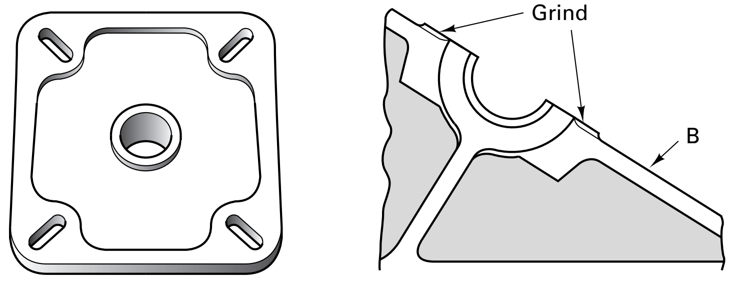

Redesigned to reduce weight and grinding time

Redesign eliminated shoulders and made part suitable for grinding in single setup

FIGURE 28-31 Reducing area to be ground and keeping all surface to be ground in the same or parallel planes are two important design recommendations. *(From* Machine Design, *June 1, 1972, p. 87.)*

Key Words

abrasive machining
abrasive waterjet
aluminum oxide
attrition
centerless grinding
coated abrasive
corundum
creep feed grinding
crush dressing
cabic boron nitride (CBN)
cylindrical grinding
diamond
dressing
emery
friability
G ratio
garnet
grade
grinding
honing
lapping
quartz
resinoid bond
rubber bond
shellac bond
silicate bond
silicon carbide
snagging
surface grinding
truing
ultrasonic machining
vitrified bond
waterjet machining

Review Questions

1. What are machining processes that use abrasive particles for cutting tools called?
2. What is attrition in an abrasive grit?
3. Why is friability an important grit property?
4. Explain the relationship between grit size and surface finish.
5. Why is aluminum oxide used more frequently than silicon carbide as an abrasive?
6. Why is CBN superior to silicon carbide as an abrasive in some applications?
7. What materials commonly are used as bonding agents in grinding wheels?
8. Why is the grade of a bond in a grinding wheel important?
9. How does grade differ from structure in a grinding wheel?
10. What is crush dressing?
11. How does loading differ from glazing?
12. What is meant by the statement that grinding is a mixture of processes?
13. What is accomplished in dressing a grinding wheel?
14. How does abrasive machining differ from ordinary grinding?
15. What is a grinding ratio or *G* ratio?
16. How is the feed of the workpiece controlled in centerless grinding?
17. Why is grain spacing important in grinding wheels?
18. Why should a cutting fluid be used in copious quantities when doing wet grinding?
19. How does plunge-cut grinding compare to cylindrical grinding?
20. If grinding machines are placed among other machine tools, what precautions must be taken?
21. What is the purpose of low-stress grinding?
22. How is low-stress grinding done compared to conventional grinding?
23. The number of grains per square inch which actively contact and cut a surface decreases with increasing grain diameter. Why is this so?
24. Why are centerless grinders so popular in industry compared to center-type grinders?
25. Explain how a SEM micrograph is made. Check the Internet or the library to find the answer.
26. Why are vacuum chucks and magnetic chucks widely used in surface grinding but not in milling?
27. How does creep feed grinding differ from conventional surface grinding?
28. Why does a lap not wear, since it is softer than the material being lapped?
29. How do honing stones differ from grinding wheels?
30. What is meant by "charging" a lap?
31. Why is a honing head permitted to float in a hole that has been bored?
32. How does a coated abrasive differ from an abrasive wheel?
33. Figure out why the bottoms of chips shown in Figure 28-9 are so smooth. The magnification of the micrograph is 4800×. How thick are these chips?
34. What is the inclined angle in honing and what determines it?
35. What are the common causes of grinding accidents?
36. What other machine tool does a surface grinder resemble?
37. Figure 28-11 showed residual stress distributions produced by surface grinding. What is a residual stress?
38. In grinding, what is infeed versus cross feed?
39. One of the problems with waterjet cutting is that the process is very noisy. Why?
40. In AWC, what keeps the abrasive jet from machining the orifice?

Problems

1. Perhaps you have observed the following wear phenomena: A set of marble or wooden steps shows wear on the treads in the regions where people step when they climb (or descend) the steps. The higher up the steps, the less the wear on the tread. Given that soles of shoes (leather, rubber) are far softer than marble or granite, explain:
   a. Why and how the steps wear.
   b. Why the lower steps are more worn than the upper steps.
2. Explain why it is that a small particle of a material can be used to abrade a surface made of the same material (i.e., why does the small particle act harder or stronger than the bulk material)?
3. In grinding, both the wheel and workpiece are moving (or rotating). Using the data in Figure 28-11 and assuming that you are doing surface grinding (see Figure 28-1), what are some typical MRR values? How do these compare to MRR values for other machining processes, such as milling? What is the significance of this?

Chapter 28 CASE STUDY

Overhead Crane Installation

Nickolas has been given the task of installing an overhead crane (Figure CS 28) in one bay of the vonTurkovich Manufacturing Company and assembly plant. Brackets for the rails of the crane are to be mounted on eight columns, four on each side of the bay area facing each other. The rails for the crane will span four columns. Each bracket on each column will need six holes in a circular pattern. The holes must be accurately spaced within 5 minutes of arc of each other. The axis of the holes must be parallel and normal to the face of the columns. The center of the bolt hole circle must be at a height of at least 20 ft from the floor, but the centers of all eight bolt hole circles must be on the same parallel plane, so that the rails for the crane are level and parallel with each other. Four of the columns along the wall have their faces flush with the wall surface so that mechanical clamping or attachments cannot be used. The building code will permit no welding of anything to these columns.

1. How would Nickolas proceed to get the bolt holes located in the right position on the beams?
2. How would he get the hole patterns located properly with respect to each other on all eight beams?
3. List the equipment he will need.
4. Make a sketch of any special tool you recommend. (Hint: Check Chapter 25 for drill jig designs and ask your favorite civil engineer for suggestions regarding surveying.)

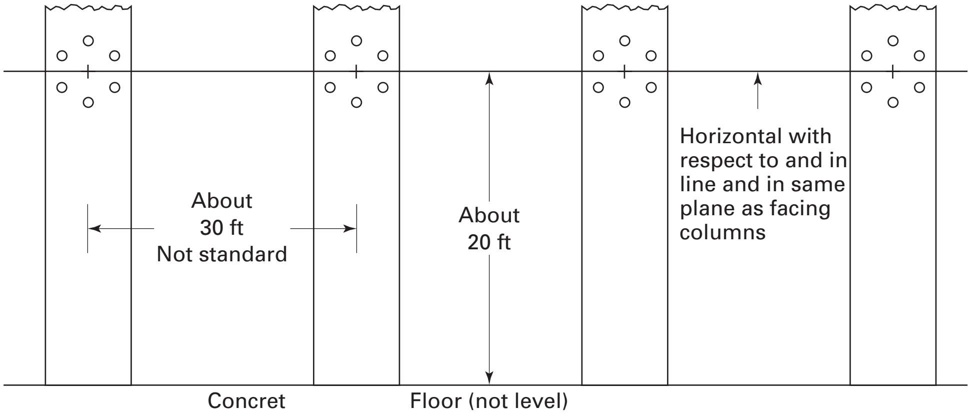

Figure CS 28 Overhead crane installation at the vonTurkovich Manufacturing Company.

CHAPTER 29

THREAD AND GEAR MANUFACTURING

29.1 INTRODUCTION

Screw threads and gears are important machine elements. *Threading*, *thread cutting*, or *thread rolling* refers to the manufacture of threads on external diameters. *Tapping* refers to machining threads in (drilled) holes. Without these processes, our present technological society would come to a grinding halt. More screw threads are made each year than any other machined element. They range in size from those used in small watches to threaded shafts 10 in. in diameter. They are made in quantities ranging from one to several million duplicate threads. Their precision varies from that of inexpensive hardware screws to that of lead screws for the most precise machine tools. Consequently, it is not surprising that many very different procedures have been developed for making screw threads and that the production cost by the various methods varies greatly. Fortunately, some of the most economical methods can provide very accurate results. However, as in the design of most products, the designer can greatly affect the ease and cost of producing specified screw threads. Thus, understanding thread-making processes permits the designer to specify and incorporate screw threads into designs while avoiding needless and excessive cost.

Gears transmit power or motion mechanically between parallel, intersecting, or nonintersecting shafts. Although usually hidden from sight, gears are one of the most important mechanical elements in our civilization, possibly even surpassing the wheel, since most wheels would not be turning were power not being applied to them through gears. They operate at almost unlimited speeds under a wide variety of conditions. Millions are produced each year in sizes from a few millimeters up to more than 30 ft in diameter. Often the requirements that must be, and are routinely, met in their manufacture are amazingly precise. Consequently, many special machines and processes have been developed for producing gears. Let us begin by discussing threads.

SCREW-THREAD STANDARDIZATION AND NOMENCLATURE

A screw thread is a ridge of uniform section in the form of a helix on the external or internal surface of a cylinder, or in the form of a conical spiral on the external or internal surface of a frustrum of a cone. These are called *straight* or *tapered* threads, respectively. Tapered threads are used on pipe joints or other applications where liquid-tight joints are required. Straight threads, on the other hand, are used in a wide variety of applications, most commonly on fastening devices, such as bolts, screws, and nuts, and as integral

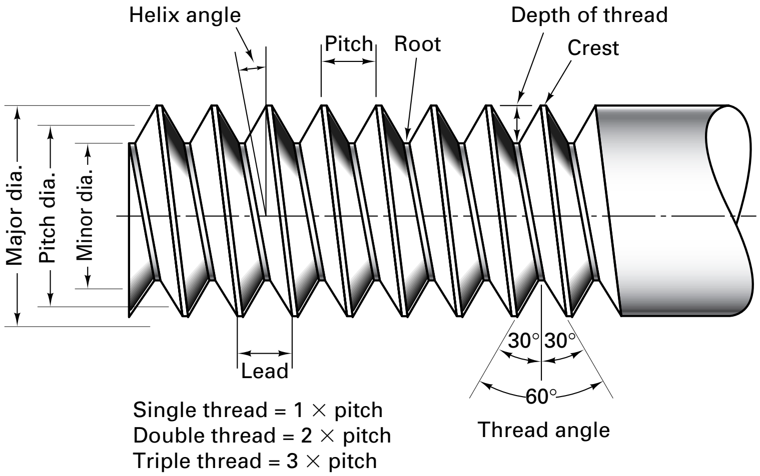

FIGURE 29-1 Standard screw-thread nomenclature.

elements on parts that are to be fastened together. But, as mentioned previously, they find very important applications in transmitting controlled motion, as in lead screws and precision measuring equipment.

The standard nomenclature for screw-thread components is illustrated in Figure 29-1. The symbol P, the pitch, refers to the distance from a point on one screw thread to the corresponding point on the next thread, measured parallel to the length axis of the part. In 1948, representatives of the United States, Canada, and Great Britain adopted the Unified and American Screw Thread Standards, based on the form shown in Figure 29-2. In 1968 the International Organization for Standards (ISO) recommended the adoption of a set of metric standards based on the basic thread profile. It appears likely that both types of threads will continue to be used for some time to come. In both the *Unified* and *ISO systems*, the crests of external threads may be flat or rounded. The root is usually made rounded to minimize stress concentrations at this critical area. The internal thread has a flat crest in order to mate with either a rounded or V-root of the external thread. A small round is used at the root to provide clearance for the flat crest of the external thread.

In the metric system, the *pitch* is always expressed in millimeters, whereas in the American (Unified) system, it is a fraction having as the numerator 1 and as the denominator the number of threads per inch. Thus, 16 threads per inch, $^{1}/_{16}$, is a 16 pitch. Consequently, in the Unified system, threads are more commonly described in terms of threads per inch rather than by the pitch.

While all elements of the thread form are based on the *pitch diameter*, screw-thread sizes are expressed in terms of the *outside*, or *major* diameter and the *pitch* or *number of threads per inch*. In threaded elements, *lead* refers to the axial advance of the element during one revolution; therefore, lead equals pitch on a single-thread screw.

TYPES OF SCREW THREADS

Eleven types, or series, of threads are of commercial importance, several having equivalent series in the metric system and Unified systems. See Figure 29-3. As has been indicated, the Unified threads are available in a coarse (UNC and NC), fine (UNF and NF), extra-fine (UNEF and NEF), and three-“pitch” (8, 12, and 16) series, the number of threads per inch in accordance with an arbitrary determination based on the major diameter.

Many nations have now adopted ISO threads into their national standards. Besides metric ISO threads, there are also inch-based ISO threads, namely the UN series with which people in the United States, Canada, and Great Britain are familiar. ISO offers a wide range of metric sizes. Individual countries have the choice of accepting all or a selection of the ISO offerings.

The size listings of metric threads start with “M” and continue with the outside diameter in millimeters. Most ISO metric thread sizes come in coarse, medium, and fine

(a) External thread

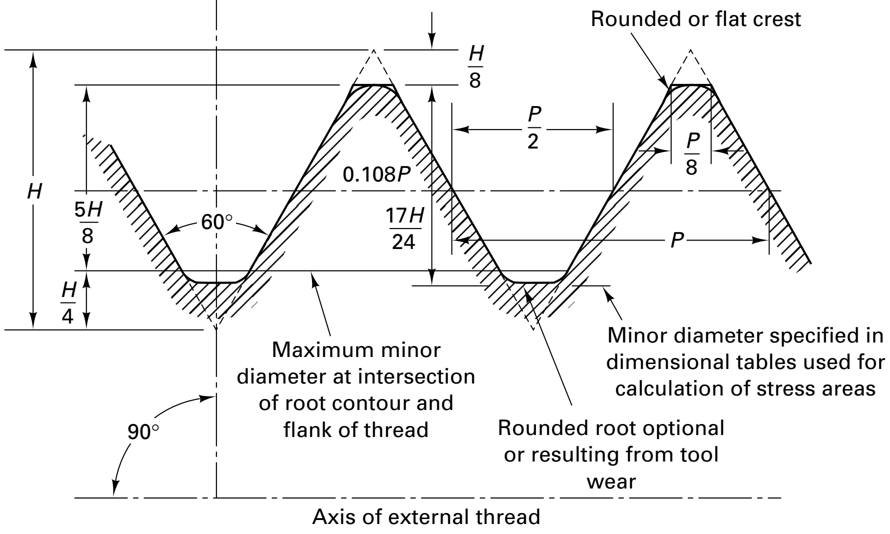

(b) Internal thread

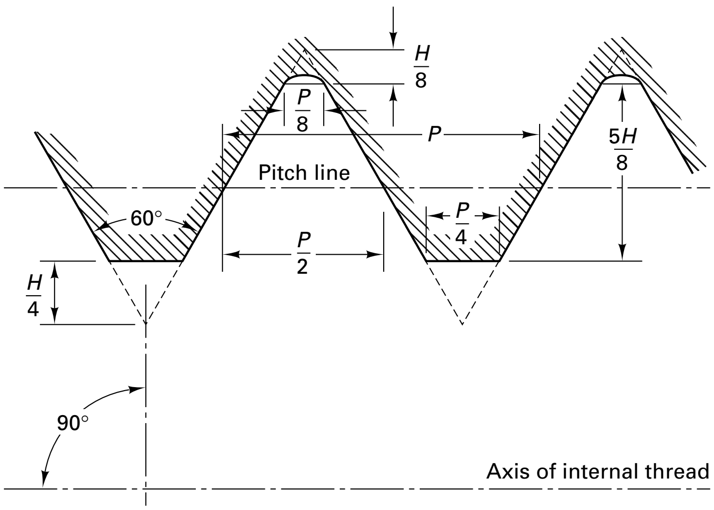

(c) Metric ISO/R68-1969

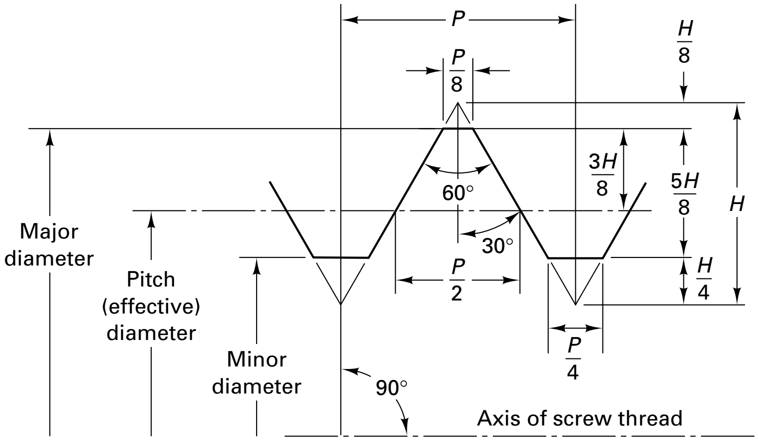

D = Major diameter of thread of nut } Normal diameter
d = Major diameter of screw } Normal diameter
D_1 = Minor diameter of thread of nut
d_1 = Minor diameter of screw
D_2 = Pitch diameter of thread of nut
d_2 = Pitch diameter of screw
H = Height of the complete theoretical thread profile
H_1 = Engagement
P = Pitch

$$H = \frac{\sqrt{3}}{2}P$$

FIGURE 29-2 Basic profiles of Unified and American screw threads: (a) external, (b) internal, and (c) metric.

Types of Screw Threads

1. *Coarse-thread series* (UNC and NC). For general use where not subjected to vibration.
2. *Fine-thread series* (UNF and NF). For most automotive and aircraft work.
3. *Extra-fine-thread series* (UNEF and NEF). For use with thin-walled material or where a maximum number of threads are required in a given length.
4. *Eight-thread series* (8UN and 8N). Eight threads per inch for all diameters from 1 to 6 in. Used primarily for bolts on pipe flanges and cylinder-head studs where an initial tension must be set up to resist steam or air pressures.
5. *Twelve-thread series* (12UN and 12N). Twelve threads per inch for diameters from $\frac{1}{2}$ through 6 in. Not used extensively.
6. *Sixteen-thread series* (16UN and 16N). Sixteen threads per inch for diameters from $\frac{3}{4}$ through 6 in. Used for a wide variety of applications that require a fine thread.
7. *American Acme thread.* This thread and the following three are used primarily in transmitting power and motion.

American Acme thread

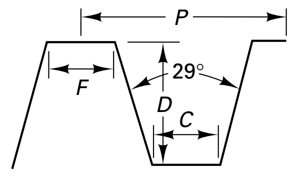

Min. depth $D = 0.5 \times P$

Width $F = 0.3707 \times P$

Width $C = F - 0.0052$

8. *Buttress thread.*

Buttress thread

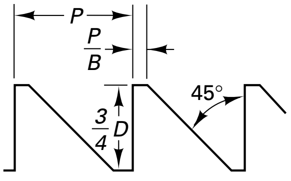

Depth $D = 0.750 \times P$
Width of flat
$= 0.125 \times P$

Flank angle = 45° in plane of axis

9. *Square thread.*

Square thread

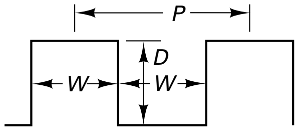

Depth $D = 0.5 \times P$
W for screw $= 0.5 \times P$

W for thread groove in nut $= 0.5 \times P$ plus 0.001 to 0.002″ clearance

10. *29° Worm thread.*

29° Worm thread

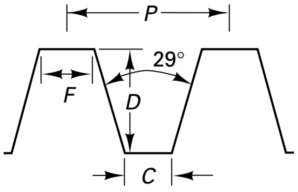

Depth $D = 0.6866 \times P$
Depth $F = 0.355 \times P$
Depth $C = 0.310 \times P$

Angle = 29° in plane of axis

11. *American, standard pipe thread.* This thread is the standard tapered thread used on pipe joints in this country. The taper on all pipe threads is $\frac{3}{4}$ in./ft.

American standard pipe thread

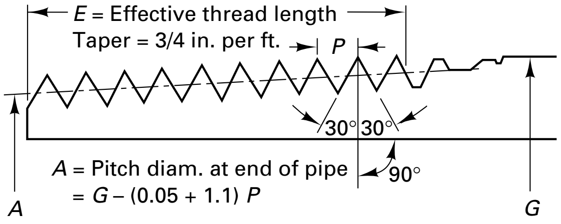

FIGURE 29-3 Types of screw threads.

pitches. When a coarse thread is designated, it is not necessary to spell out the pitch. For example, a coarse 10-mm outside diameter (OD) thread is called out as “M 12.” This thread has a pitch of 1.75 mm, but the pitch may be omitted from the call-out. A fine 12-mm OD thread is available. It has a 1.25-mm pitch and must be designated “M12 x 1.25” an extra-fine 12-mm OD thread having 0.75 mm-pitch would receive the designation “M 12 x 0.75.”

The symbol “x” is not employed as a multiplication symbol in metric practice; rather, it is used to relate these two attributes of the threads. The full description of a thread fastener obviously includes information beyond the thread specification. Head type, length, length of thread, design of end, thread runout, heat treatment, applied finishes, and other data may be needed to fully specify a bolt besides the designation of the thread. The “x” should not be used to separate any of the other characteristics.

Here is another example of an ISO thread designation:

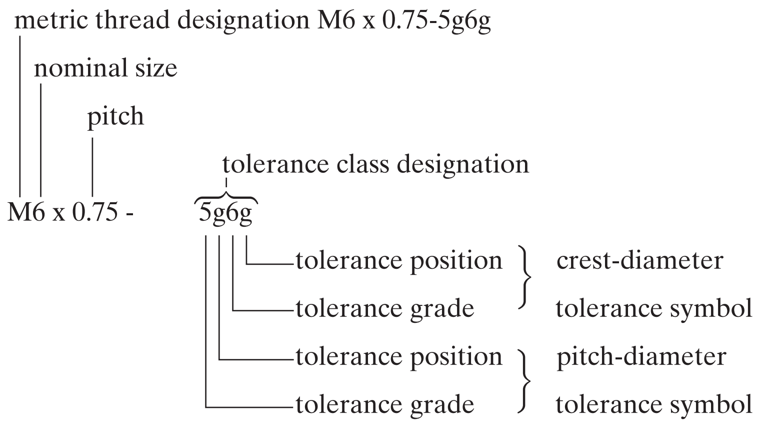

In the ISO system, tolerances are applied to “positions” and “grades.” Tolerance positions denote the limits of pitch and crest diameters, using “e” (large), “g” (small), and “H” (no allowance) for internal threads. The grade is expressed by numerals 3 through 9. Grade 6 is roughly equivalent to U.S. grades 2A and B, medium-quality, general-purpose threads. Below 6 is fine quality and/or short engagement. Above 6 is coarse quality and/or long length of engagement.

In the Unified system, screw threads are designated by symbols as follows:

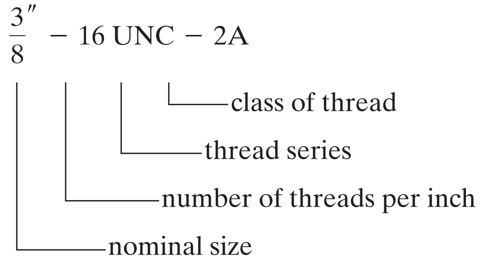

This type of designation applies to right-hand threads. For left-hand threads, the letters LH are added after the class of thread symbol.

In the Unified system, manufacturing tolerances are specified by three classes. Class 1 is for ordnance and other special applications. Class 2 threads are the normal production grade, and Class 3 threads have minimum tolerances where tight fits are required. The letters A and B are added after the class numerals to indicate external and internal threads, respectively.

The availability of fasteners, particularly nuts, containing plastic inserts to make them self-locking and thus able to resist loosening due to vibration, and the use of special coatings that serve the same purpose, have resulted in less use of finer-thread-series fasteners in mass production. Coarser-thread fasteners are easier to assemble and less subject to cross-threading (binding).

29.2 THREAD MAKING

Three basic methods are used to produce threads: *cutting*, *rolling*, and *casting*. Although both external and internal threads can be cast, relatively few are made in this manner, primarily in connection with die casting, investment casting, or the molding of plastics. Today, by far the largest number of threads are made by rolling. Both external and internal threads can be made by rolling, but the material must be ductile. Because rolling is a less flexible process than thread cutting, it is restricted essentially to standardized and simple parts. Consequently, large numbers of external and internal threads still are made by cutting processes, including grinding and tapping.

External Thread Cutting Methods	Internal Thread Cutting Methods
Threading on an engine lathe	Threading (on an engine lathe or NC lathe)
Threading on an NC lathe	With a tap and holder (manual NC, machine, semiautomatic, or automatic)
With a die held in a stock (manual)	With a collapsible tap (turret lathe, screw machine, or special threading machine)
With an automatic die (turret lathe or screw machine) or NC lathe	By milling
By milling	
By grinding	

CUTTING THREADS ON A LATHE

Lathes provided the first method for cutting threads by machine. Although most threads are now produced by other methods, lathes still provide the most versatile and fundamentally simple method. Consequently, they often are used for cutting threads on special workpieces where the configuration or nonstandard size does not permit them to be made by less costly methods.

There are two basic requirements for thread cutting on a lathe. First, an accurately shaped and properly mounted tool is needed because thread cutting is a form-cutting operation. The resulting thread profile is determined by the shape of the tool and its position relative to the workpiece. Second, the tool must move longitudinally in a specific relationship to the rotation of the workpiece, because this determines the *lead* of the thread. This requirement is met through the use of the *lead screw* and the *split nut*, which provide positive motion of the carriage relative to the rotation of the spindle.

To cut a thread, it is also essential that a constant positional relationship be maintained among the workpiece, the cutting tool, and the lead screw. If this is not done, the tool will not be positioned correctly in the thread space on successive cuts. Correct relationship is obtained by means of a *threading dial* (Figure 29-4), which is driven directly by the lead screw through a worm gear. Because the workpiece and the lead screw are directly connected, the threading dial provides a means for establishing the desired positional relationship between the workpiece and the cutting tool. The threading dial is graduated into an even number of major and half divisions. If the feed mechanism is engaged in accordance with the following rules, correct positioning of the tool will result:

1. *For even-number threads:* at any line on the dial
2. *For odd-number threads:* at any numbered line on the dial
3. *For threads involving $\frac{1}{2}$ numbers:* at any odd-numbered line on the dial
4. *For $\frac{1}{4}$ or $\frac{1}{8}$ threads:* return to the original starting line on the dial

To start cutting a thread, the tool usually is fed inward until it just scratches the work, and the cross-slide dial reading is then noted or set at zero. The split nut is engaged and the tool permitted to run over the desired thread length. When the tool reaches the end of the thread, it is quickly withdrawn by means of the cross-slide control. The split nut is then disengaged and the carriage returned to the starting position, where the tool is clear of the workpiece. At this point the future thread will be indicated by a fine scratch line. This permits the operator to check the thread lead by means of a scale or thread gage to assure that all settings have been made correctly.

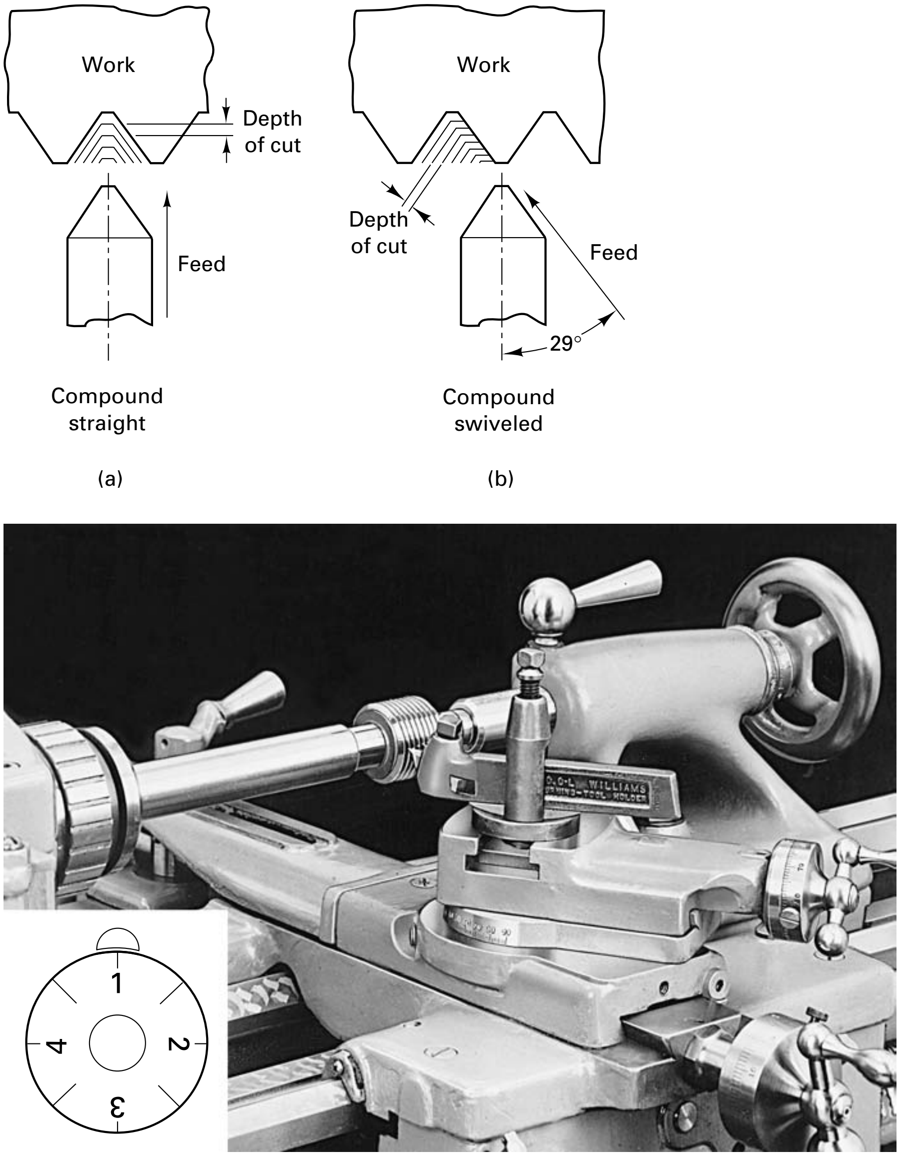

FIGURE 29-4 Cutting a screw thread on a lathe, showing the method of supporting the work and the relationship of the tool to the work with the compound swiveled. Inset shows face of threading dial.

Next, the tool is returned to its initial zero depth position by returning the cross slide to the zero setting. By using the compound rest, the tool can be moved inward the proper depth for the first cut. A depth of 0.010 to 0.025 in. is usually used for the first cut and smaller amounts on each successive cut, until the final cut is made with a depth of only 0.001 to 0.003 in. to produce a good finish. When the thread has been cut nearly to its full depth, it is checked for size by means of a mating nut or thread gage. Cutting is continued until a proper fit is obtained.

Figure 29-4 illustrates two methods of feeding the tool into the work. If the tool is fed radially, cutting takes place simultaneously on both sides of the tool. With this true form-cutting procedure, no rake should be ground on the tool, and the top of the tool must be horizontal and be set exactly in line with the axis of rotation of the work. Otherwise, the resulting thread profile will not be correct. An obvious disadvantage of this method is that the absence of side and back rake results in poor cutting (except on cast iron or brass).The surface finish on steel will usually be poor. Consequently, the second method commonly is used,with the compound swivelled 20°. The cutting then occurs primarily on the left-hand edge of the tool, and some side rake can be provided.

Proper speed ratio between the spindle and the lead screw is set by means of the gear-change box. Modern industrial lathes have ranges of ratios available so that nearly all standard threads can be cut merely by setting the proper levers on the quick-change gear box.

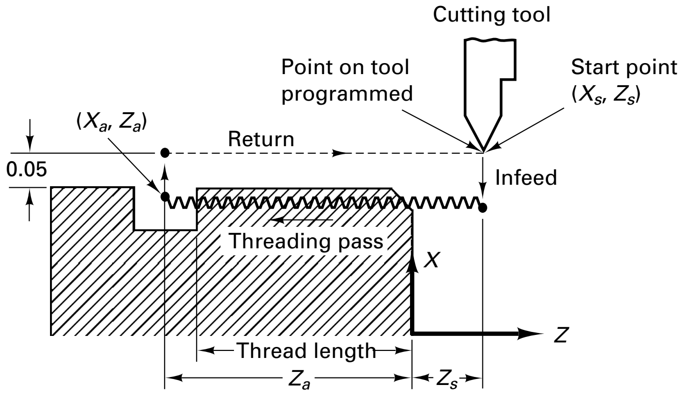

FIGURE 29-5 Canned subroutines called G codes are used on CNC lathes to produce threads. See Chapter 26 for CNC discussion.

X_a	Specifies the absolute X coordinate of the tool after axial infeed.
$G32$	Initiates the single-pass threading cycle.
Z_a	Specifies the absolute Z coordinate of the tool after the threading pass.
Fn	n specifies the feed rate
X_s Z_s	Specifies the absolute X and Z coordinates of the start point.

Cutting screw threads on a lathe is a slow, repetitious process that requires considerable operator skill. The cutting speeds usually employed are from one-third to one-half of regular speeds to enable the operator to have time to manipulate the controls and to ensure better cutting. The cost per part can be high, which explains why other methods are used whenever possible.

CUTTING THREADS ON A CNC LATHE

Computer numerical control (CNC) lathes and turning centers can be programmed to machine straight, tapered, or scroll threads. Threads machined using the same type of special tool have the thread shape shown in Figure 29-4. The tool is positioned at a specific starting distance from the end of the work (Figure 29-5). This distance will vary from machine to machine. Its value can be found in the machine's programming manual. The CNC software will have a set of preprogrammed machining routines (called G codes) specifically for threading. Beginning at the start point, the tool accelerates to the feed rate required to cut the threads. The tool creates the thread shape by repeatedly following the same path as axial infeed is applied. For standard V-threads, the infeed can be applied along a 0° or 29° angle. The depth of cut for the first pass is the largest. The cutting depth is then decreased for each successive pass until the required thread depth is achieved. A final finishing pass is then made with the tool set at the thread depth.

CUTTING THREADS WITH DIES

Straight and tapered external threads up to about $1\frac{1}{2}$ in. in diameter can be manually cut quickly by means of threading dies (Figure 29-6a). Basically, these dies are similar to hardened, threaded nuts with multiple cutting edges. The cutting edges at the starting end

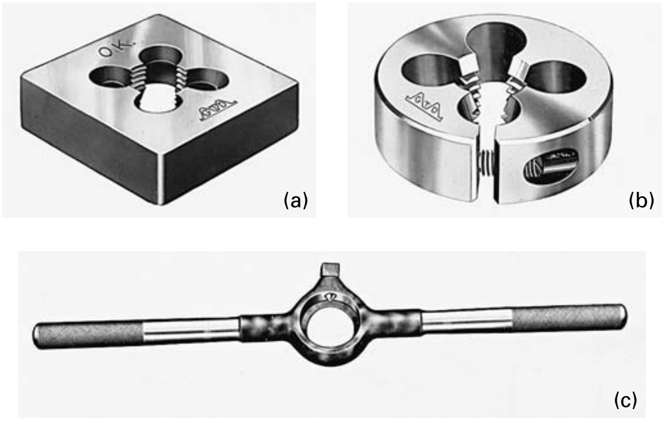

FIGURE 29-6 (a) Solid threading die; (b) solid-adjustable threading die; (c) threading-die stock for round die (die removed). *(Courtesy of TRW-Greenfield Tap & Die.)*

are beveled to aid in starting the dies on the workpiece. As a consequence, a few threads at the inner end of the workpiece are not cut to full depth. Such threading dies are made of carbon or high-speed tool steel.

Solid-type dies are seldom used in manufacturing because they have no provision for compensating for wear. The solid-adjustable type (Figure 29-6b) is split and can be adjusted over a small range by means of a screw to compensate for wear or to provide a variation in the fit of the resulting screw thread. These types of threading dies are usually held in a *stock* for hand rotation. A suitable lubricant is desirable to produce a smoother thread and to prolong the life of the die, since there is extensive friction during the cutting process.

SELF-OPENING DIE HEADS

A major disadvantage of solid-type threading dies is that they must be unscrewed from the workpiece to remove them. They are therefore not suitable for use on high-speed, production-type machines, and *self-opening die heads* are used instead on turret lathes, screw machines, numerically controlled (NC) lathes, and special threading machines for cutting external threads.

There are three types of self-opening die heads, all having four sets of adjustable, multiple-point cutters that can be removed for sharpening or for interchanging for different thread sizes. This permits one head to be used for a range of thread sizes (see Figure 29-7). The cutters can be positioned radially or tangentially, resulting in less tool flank contact and friction rubbing. In some self-opening die heads, the cutters are circular, with an interruption in the circular form to provide an easily sharpened cutting face. The cutters are mounted on the holder at an angle equal to the helix angle of the thread.

As the name implies, the cutters in self-opening die heads are arranged to open automatically when the thread has been cut to the desired length, thereby permitting the die head to be quickly withdrawn from the workpiece. On die heads used on turret lathes, the operator must usually reset the cutters in the closed position before making the next thread. The die heads used on screw machines and automatic threading machines are provided with a mechanism that automatically closes the cutters after the heads are withdrawn.

Cutting threads by means of self-opening die heads is frequently called *thread chasing*. However, some people apply this term to other methods of thread cutting, even to cutting a thread in a lathe.

■ 29.3 INTERNAL THREAD CUTTING–TAPPING

The cutting of an internal thread by means of a multiple-point tool is called *thread tapping*, and the tool is called a *tap*. A hole of diameter slightly larger than the minor diameter of the thread must already exist, made by drilling/reaming, boring, or die casting. For small holes, solid *hand taps* (Figure 29-8) are usually used. The flutes create cutting edges on the thread profile and provide space for the chips and the passage of cutting fluid. Such taps are made of either carbon or high-speed steel and are now routinely coated with TiN. The flutes can be either straight, helical, or spiral.

Hand taps (Figure 29-8) have square shanks and are usually made in sets of three. The *taper tap* has a tapered end that will enter the hole a sufficient distance to help align the tap. In addition, the threads increase gradually to full depth, and therefore this type of tap requires less torque to use. However, only a through-hole can be threaded completely with a taper tap because it cuts to full depth only behind the tapered portion. A blind hole can be threaded to the bottom using three types of taps in succession. After the taper tap has the thread started in proper alignment, a *plug tap*, which has only a few tapered threads to provide gradual cutting of the threads to depth, is used to cut the threads as deep into the hole as its shape will permit. A *bottoming tap*, having no tapered threads, is used to finish the few remaining threads at the bottom of the hole to full depth. Obviously, producing threads to the full depth of a blind hole is time-consuming, and it also frequently results in broken taps and defective workpieces. Such configurations usually can be avoided if designers will give reasonable thought to the matter.

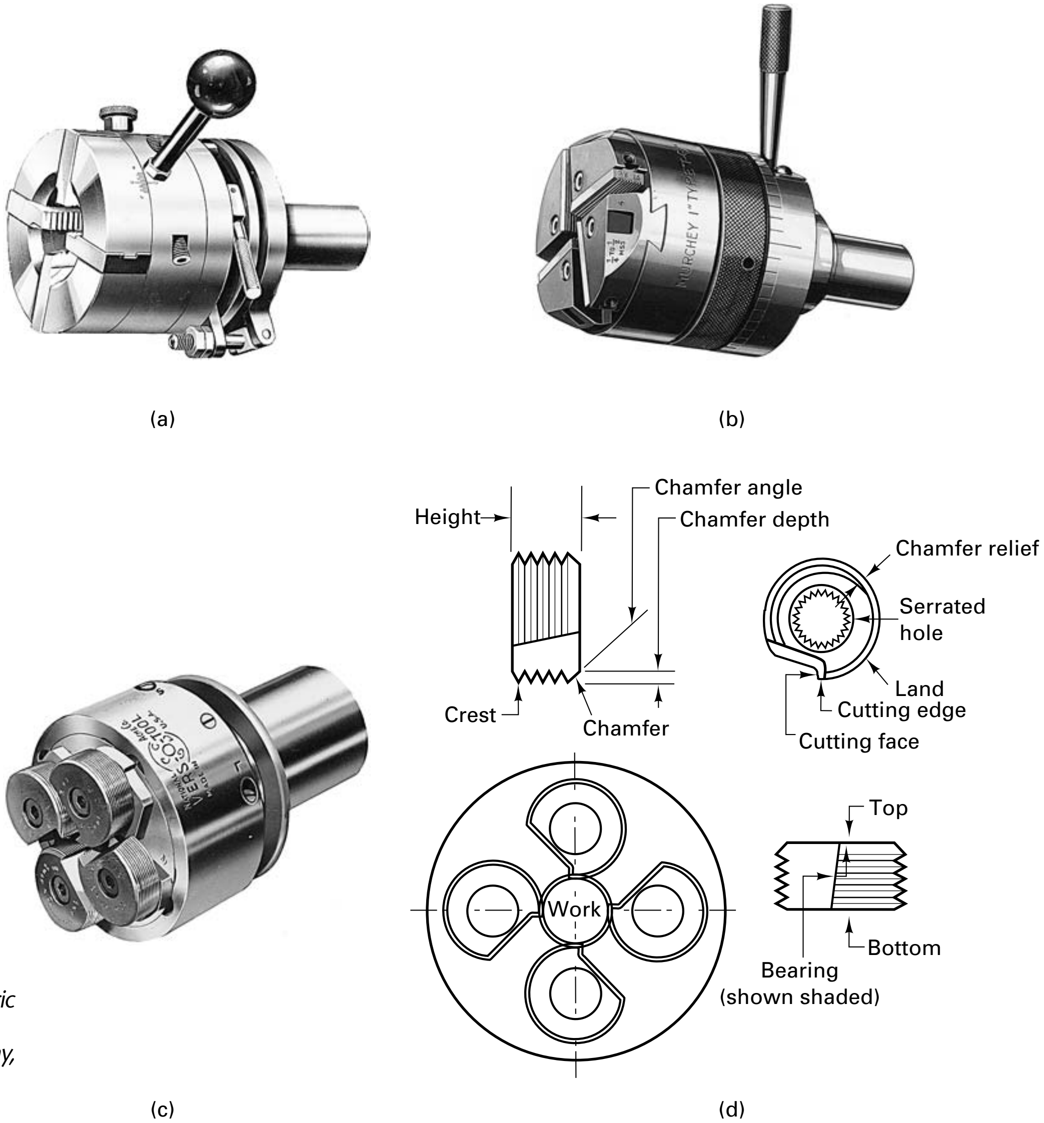

FIGURE 29-7 Self-opening die heads, with (a) radial cutter, (b) tangential cutters, (c) circular cutters, and (d) terminology of circular chasers and their relation to the work. *(Courtesy of Geometric Tool Company, Warner & Sawsey Company, National Acme Company, and TRW-Greenfield Tap & Die, respectively.)*

Taps operate under very severe conditions because of the heavy friction (high torque) involved and the difficulty of chip removal. Also, taps are relatively fragile. *Spiral-fluted taps* (Figure 29-9) provide better removal of chips from a hole, particularly in tapping materials that produce long, curling chips. They are also helpful in tapping holes where the cutting action is interrupted by slots or keyways. The *spiral point* cuts the thread with a shearing action that pushes the chips ahead of the tap so that they do not interfere with the cutting action and the flow of cutting fluid into the hole.

COLLAPSING TAPS

Collapsing taps are similar to self-opening die heads in that the cutting elements collapse inward automatically when the thread is completed. This permits withdrawing the tap from the workpiece without the necessity of unscrewing it from the thread. They can either be self-setting, for use on automatic machines, or require manual setting for each cycle. Figure 29-10 shows some of the types available.

HOLE PREPARATION

Drilling is the most common method of preparing holes for tapping, and when close control over hole size is required, reaming may also be necessary. The drill size determines the final thread contour and the drilling torque. Unless otherwise specified, the tap drill size for most materials should produce approximately 75% thread, that is, 75% of full thread depth.

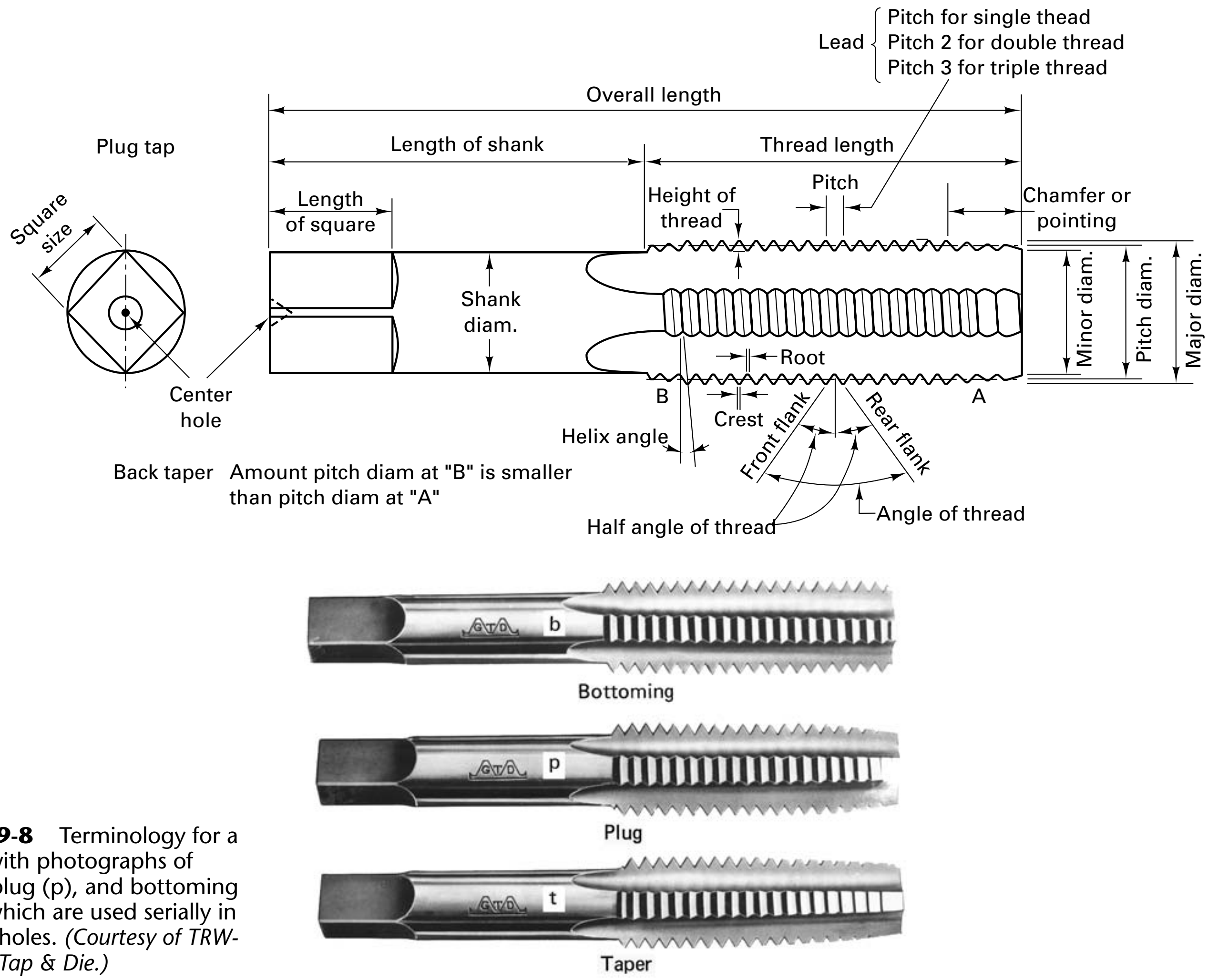

FIGURE 29-8 Terminology for a plug tap with photographs of taper (t), plug (p), and bottoming (b) taps, which are used serially in threading holes. *(Courtesy of TRW-Greenfield Tap & Die.)*

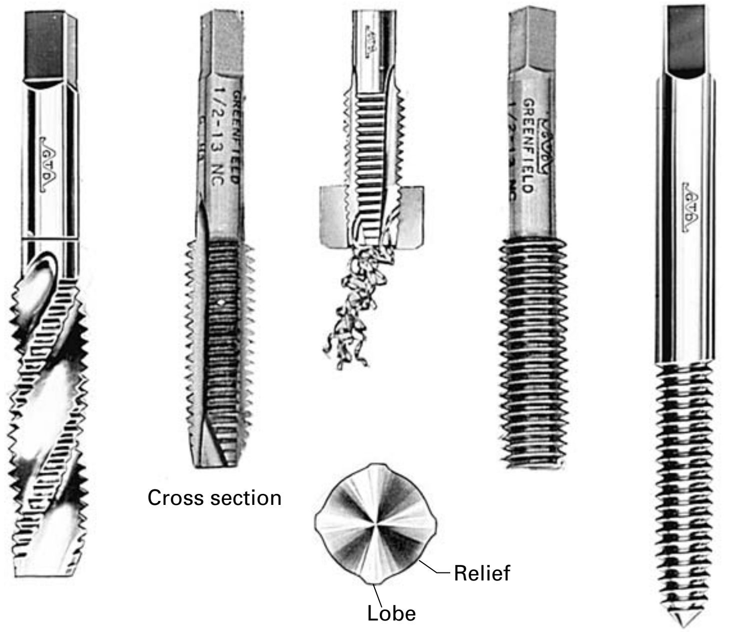

FIGURE 29-9 (Left to right) Spiral-fluted tap; spiral-point tap; spiral-point tap cutting chips; fluteless bottoming tap and fluteless plug tap for cold-forming internal threads; cross section of fluteless forming tap. *(Courtesy of TRW-Greenfield Tap & Die.)*

Solid adjustable ALT collapsible 2LLS receding collapsible

LL receding collapsible ELT collapsible CBLM receding collapsible

FIGURE 29-10 Solid-adjustable and collapsible taps. *(Courtesy of Teledyne Landis Machine.)*

TAPPING IN MACHINE TOOLS

Solid taps also are used in tapping operations on machine tools, such as lathes, drill presses, and special tapping machines. In tapping on a drill press, a tapping attachment is often used. These devices rotate the tap slowly when the drill press spindle is fed downward against the work. When the tapping is completed and the spindle raised, the tap is automatically driven in the reverse direction at a higher speed to reduce the time required to back the tap out of the hole. Some modern machine tools provide for extremely fast spindle reversal for backing taps out of holes.

When solid taps are used on a screw machine or turret, the tap is prevented from turning while it is being fed into the work. As the tap reaches the end of the hole, the tap is free to rotate with the work. The work is then reversed and the tap, again prevented from rotating, is backed out of the hole.

The machine should have adequate power, rigidity, speed and feed ranges, cutting fluid supply, and positive drive action. Chucks, tap holders, and collets should be checked regularly for signs of wear or damage. Accurate alignment of the tap holder, machine spindle, and workpiece is vital to avoid broken taps or bell-mouthed, tapered, or oversized holes.

TAPPING CUTTING TIME

The equation to calculate the cutting time for tapping is (approximately)

$$T_m = \frac{Ln}{N} = \frac{\pi DLn}{12V} + A_L + A_R \tag{29-1}$$

where

N = spindle rpm
T_m = cutting time (min)
D = tap diameter (in.)
L = depth of tapped hole or length of cut (in.)
N = number of threads per inch (tpi)(feed rate)
V = cutting speed (sfpm)
A_L = allowance to start the tap (min)
A_R = allowance to withdraw the tap (min)

SPECIAL THREADING AND TAPPING MACHINES

Special machines are available for production threading and tapping. Threading machines usually have one or more spindles on which a self-opening die head is mounted, with suitable means for clamping and feeding the workpiece. Special tapping machines using self-collapsing taps substituted for the threading dies are also available. More commonly, tapping machines resemble drill presses, modified to provide spindle feeds both upward and downward, with the speed and feed more rapid on the upward motion.

COMMON TAPPING PROBLEMS

Tap overloading is often caused by poor lubrication, lands that are too wide, chips packed in the flutes, or tap wear. Surface roughness in the threads has many causes. A negative grind on the heel will prevent the tap from tearing the threads when backing out.

When a tap loses speed or needs more power, it generally indicates that the tap is dull (or improperly ground) or the chips are packed in flutes (loaded).The flutes may be too shallow or the lands too deep. When tapping soft ductile metals, loading can usually be overcome by polishing the tap before usage.

Improper hole size due to drill wear increases the percentage of threads being cut. Dull tools can also produce a rough finish or workharden the hole surface and cause the tap to dull more quickly. Check to see that the axis of the hole and tap are aligned. If the tap cuts when backing out, check to see if the hole is oversize.

TAPPING HIGH-STRENGTH MATERIALS

High-strength, thermal-resistant materials, sometimes called “exotics,” cause special problems in tapping. A variety of materials are classified as exotics: stainless steel, precipitation-hardened stainless steel, high-alloy steels, iron-based superalloys, titanium, Inconcel, Hastelloy, Monel, and Waspalloy. Their most important attribute is their high strength-to-weight ratio.

Each material presents different problems to efficient tapping, but they all share certain similarities. Toughness and general abrasiveness top the list. It is also difficult to impart a good surface finish to exotics; heat tends to localize in the shear zone, and exotics tend to workharden and grab the tool.

A tap’s chamfer and first full thread do virtually all the cutting. The remaining ground threads serve merely as chasers. Because of this, taps to thread exotics are increasingly manufactured with short threads and reduced necks. They diminish problems caused by material closure and provide more space for coolant and chip ejection.

When tapping exotics, the largest tap core diameter possible should be applied. Cutting 75 or 65% threads places less stress on the taps, lengthening tool life and reducing breakage. To cut threads in exotic alloys successfully, taps must combine geometries specifically tailored for those materials and be made of premium tool steels subjected to precisely controlled heat-treatment processes.

Stainless steel is known to workharden and to have slow heat-dissipation characteristics; stainless steel requires a tap geometry with a positive 6° to 9° rake, preventing workhardening and reducing torque. Grinding an appropriate eccentric thread and back-taper relief onto the tap will reduce friction. A surface treatment promotes lubricity. That is, the tool should be made from high-vanadium, high-cobalt tool steel and have a surface treatment so that coolant adheres to it. Stainless steel generates long chips and requires a tap with a 38° helix angle and adequate flute depth to promote chip evacuation. Proper hook and radial relief guarantee accurate thread-hole size and long tool life.

When tapping a titanium alloy, the material’s tendency to concentrate heat in a small contact area must be considered. Concentrated heat often leads to excessive cutting-edge wear. Titanium generates average-to-short chips, is abrasive, and is prone to chip welding and high friction. These characteristics degrade tap performance and shorten tool life.

Taps for threading titanium are constructed of premium tool steel, nitrided for hardness. Titanium nitride (TiN) coatings cannot be used because they react chemically with the workpiece material, causing rapid tap failure. For tapping through-holes, a 3° to 5° rake and short thread design with high eccentric relief will promote efficient chip evacuation.

Nickel-based Inconel, Monel, Waspalloy, and Hastelloy present severe tapping problems. Among their machining characteristics are toughness, workhardening, heat retention, and built-up-edge (BUE). Taps designed to thread these materials need tremendous stability and a strong cross-sectional construction. The most popular tap materials for nickel alloys are high-vanadium, high-cobalt tool steel or powdered metal (PM) tool steel. Tapping blind holes in these alloys requires a 3° to 5° rake to shear and deflect the cutting forces downward toward the tap's root, its strongest area. A 26° helix angle promotes chip evacuation, and a nitride or TiN coating reduces friction and tool wear. Because of nickel alloys' toughness, taps to cut them should have the longest taper possible. This allows the cutting edges to progressively gain thread height before the first full thread begins its cut, distributing the load over a wider area. Spiral-pointed, straight-flute taps have a four- to five-thread taper. For tapping blind holes, the first two or three threads—more if possible—should be tapered.

CUTTING FLUID FOR TAPPING

Cutting fluids should be kept as clean as possible and should be supplied in copious quantities to reduce heat and friction and to aid in chip removal. Long tap life has been reported to result from routing high-pressure coolants through the tap to flush out the chips and cool the cutting edges. Recommended cutting fluids are listed in Table 29-1.

■ 29.4 THREAD MILLING

Highly accurate threads, particularly in larger sizes, are often form milled. Either a single- or a multiple-form cutter may be used. A single-form cutter having a single annular row of teeth is tilted at an angle equal to the helix angle of the thread and is fed inward radially to full depth while the work is stationary. The workpiece then is rotated slowly, and the cutter simultaneously is moved longitudinally, parallel with the axis of the work (or vice versa), by means of a lead screw, until the thread is completed. The thread can be completed in a single cut, or roughing and finish cuts can be used. This process is used primarily for large-lead or multiple-lead threads.

Some threads can be milled more quickly by using a multiple-form cutter having multiple rows of teeth set perpendicular to the cutter axis (the rows having no lead). The cutter must be slightly longer than the thread to be cut. It is set parallel with the axis of the workpiece and fed inward to full-thread depth while the work is stationary. The work then is rotated slowly for a little over one revolution, and the rotating cutter is simultaneously moved longitudinally with respect to the workpiece (or vice versa) according to

TABLE 29-1 Cutting Fluids for Tapping (HSS Tools)

Work Material	Cutting Fluid
Aluminum	Kerosene and lard oil; kerosene and light-base oil
Brass	Soluble oil or light-base oil
Naval brass	Mineral oil with lard or light-base oil
Manganese bronze	Mineral oil with lard or light-base oil
Phosphor bronze	Mineral oil with lard or light-base oil
Copper	Mineral oil with lard or light-base oil
Iron, cast malleable	Dry or soluble oil
	Soluble oil or sulfur-base oil
Magnesium	Light-base oil diluted with kerosene
Monel metal	Sulfur-base oil
Steels:	
Up to 0.25 carbon	Sulfur-base or soluble oil
Free machining	Sulfur-base or soluble oil
0.30–0.60 carbon, annealed	Chlorinated sulfur-base oil
0.30–0.60 carbon, heat treated	Sulfur-base oil
Tool, high-carbon, HSS	Chlorinated sulfur-base oil
Stainless	Chlorinated sulfur-base oil
Titanium	Chlorinated sulfur-base oil
Zinc die castings	Kerosene and lard oil

the thread lead. When the work has revolved one revolution, the thread is complete. This process cannot be used on threads having a helix angle greater than about 3°, because clearance between the sides of the threads and the cutter depends on the cutter diameter's being substantially less than that of the workpiece. Thus, although the process is rapid, its use is restricted to threads of substantial diameter and not more than about 2 in. long.

As shown in Figure 29-11, advances in CNC computer controls have led to thread milling on three-axis machines. Today's CNC can helically interpolate the axial feed controlling the thread pitch with circular feed controlling the circumference of the thread.

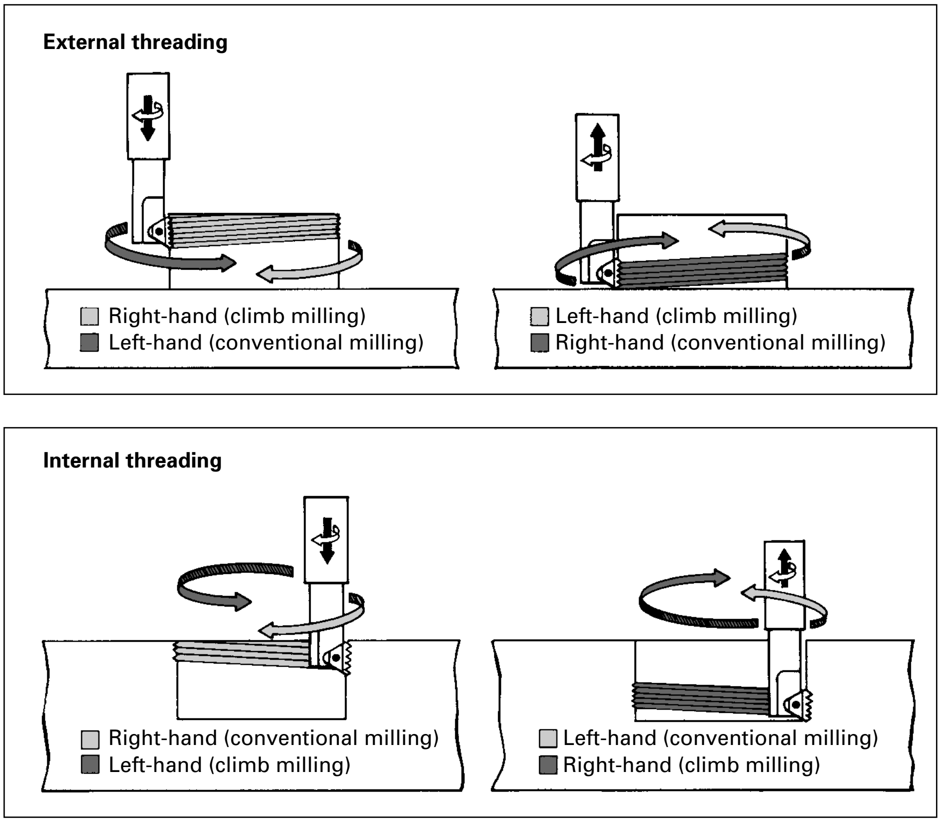

Thread milling on machining centers with multitooth indexable-carbide-insert cutters was introduced about twenty years ago. The cutter can produce a finished thread in one helical pass.

FIGURE 29-11 Thread milling on a three-axis NC machine can produce a complete thread in a single feed revolution. *(Fred Mason, American Machinist, November, 1988.)*

The cutter has teeth shaped like the desired thread form. The cutter rotates at high speeds while its axis slowly moves around the part in a planetary arc just over 360°. The cutter advances axially a distance equal to one pitch to generate the helical path. Thread milling has advantages in diameters over 1.5 in., including better surface finish and concentricity and the ability to produce right- or left-hand threads with the same tool. Thrilling (drilling plus threading) produces threaded holes by combining short hole drilling with thread milling using a combination tool with a drill point and a thread mill body. The details of the process are shown in Figure 29-12 and can be done on any CNC machining center. Compared to tapping, the process eliminates two tools, two tool holders, and two tool change cycles as the single tool combines the drill ream and tap functions into one tool. Threaded-hole depths are limited to about three hole diameters.

■ 29.5 THREAD GRINDING

Grinding can produce very accurate threads, and it also permits threads to be produced in hardened materials. Three basic methods are used. *Center-type grinding with axial feed* is the most common method, being similar to cutting a thread on a lathe. A shaped grinding wheel replaces the single-point tool. Usually, a single-ribbed grinding wheel is employed, but multiple-ribbed wheels are used occasionally. The grinding wheels are shaped by special diamond dressers or by crush dressing and must be inclined to the helix angle of the thread. Wheel speeds are in the high range. Several passes are usually required to complete the thread.

Center-type infeed thread grinding is similar to multiple-form milling in that a multiple-ribbed wheel, as wide as the length of the desired thread, is used. The wheel is fed inward radially to full thread depth, and the thread blank is then turned through about $1^1/_2$ turns as the grinding wheel is fed axially a little more than the width of one thread. *Centerless thread grinding* is used for making headless setscrews. The blanks are hopper fed to the regulating wheel, which causes them to traverse the grinding wheel face, from which they emerge in completed form. Production rates of 60 to 70 screws of $^1/_2$–in. length per minute are possible.

■ 29.6 THREAD ROLLING

Thread rolling is used to produce threads in substantial quantities. This is a cold-forming process operation in which the threads are formed by rolling a thread blank between hardened dies that cause the metal to flow radially into the desired shape. Because no metal is removed in the form of chips, less material is required, resulting

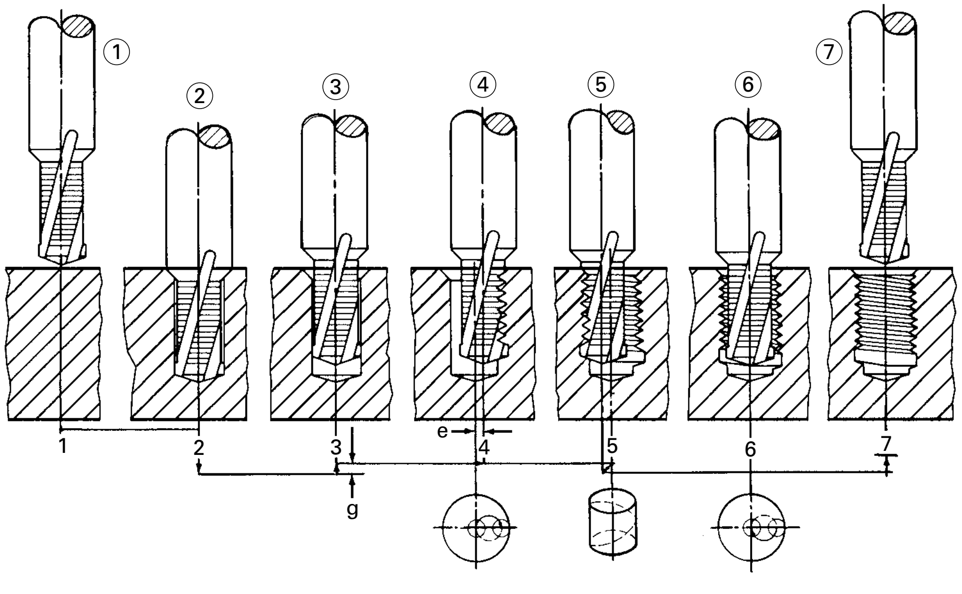

FIGURE 29-12 The process of high-speed thrilling (drilling plus threading) a hole includes (1) approach, (2) drill plus chamfer, (3) retract one thread pitch, (4) radially ramp to the major thread diameter, (5) thread-mill with helical interpolation, (6) return the tool to the centerline of the hole, and (7) retract from the finished hole. At 20,000 rpm, a hole can be thrilled in aluminum in less than two seconds. *(Fred Mason, American Machinist, November, 1988.)*

in substantial savings. In addition, because of cold working, the threads have greater strength than cut threads, and a smoother, harder, and more wear-resistant surface is obtained. In addition, the process is fast, with production rates of one per second being common. The quality of cold-rolled products is consistently good. Chipless operations are cleaner and there is a savings in material (15% to 20% savings in blank stock weight is typical).

Thread rolling is done by four basic methods. The simplest of these employs one fixed and one movable flat rolling die (Figure 29-13). After the blank is placed in position on the stationary die, movement of the moving die causes the blank to be rolled between the two dies and the metal in the blank is displaced to form the threads. As the blank rolls, it moves across the die parallel with its longitudinal axis. Prior to the end of the stroke of the moving die, the blank rolls off the end of the stationary die, its thread being completed.

One obvious characteristic of a rolled thread is that its major diameter always is greater than the diameter of the blank. When an accurate class of fit is desired, the diameter of the blank is made about 0.002 in. larger than the thread-pitch diameter. If it is desired to have the body of a bolt larger than the outside diameter of the rolled thread, the blank for the thread is made smaller than the body.

Thread rolling can be done with cylindrical dies. Figure 29-13 illustrates the three-roll method commonly employed on turret lathes and screw machines. Two variations are used. In one, the rolls are retracted while the blank is placed in position. The rolls then move inward radially, while rotating, to form the thread. More commonly the three rolls are contained in a self-opening die head similar to the conventional type used for cutting external threads. The die head is fed onto the blank longitudinally and forms the thread progressively as the blank rotates. With this procedure, as in the case of cut threads, the innermost $1^1/_2$ to 2 threads are not formed to full depth because of the progressive action of the rollers.

The two-roll method is commonly employed for automatically producing large quantities of externally threaded parts up to 6 in. in diameter and 20 in. in length. The planetary-type machine is for mass production of rolled threads on diameters up to 1 in. Not only is thread rolling very economical, the threads are excellent as to form and strength. The cold working contributes to increased strength, particularly at the critical root areas. There is less likelihood of surface defects (produced by machining), which can act as stress raisers.

Large numbers of threads are rolled on thin, tubular products. In this case external and internal rolls are used. The threads on electric lamp bases and sockets are examples of this type of thread.

CHIPLESS TAPPING

Unfortunately, most internal threads cannot be made by rolling; there is insufficient space within the hole to permit the required rolls to be arranged and supported, and the required forces are too high. However, many internal threads, up to about $1^1/_2$ in. in diameter, are coldformed in holes in ductile metals by means of *fluteless taps*. Such a tap and its special cross section are shown in Figure 29-9. The forming action is essentially the same as in rolling external threads. Because of the forming involved and the high friction, the torque required is about double that for cutting taps. Also, the hole diameter must be controlled carefully to obtain full thread depth without excessive torque. However, fluteless taps produce somewhat better accuracy than cutting taps, and tap life is often greater than that of high-speed-steel (HSS) machine taps. A lubricating fluid should be used, water-soluble oils being quite effective. Fluteless taps are especially suitable for forming threads in dead-end holes because no chips are produced. They come in both plug and bottoming types.

MACHINING VERSUS ROLLING THREADS

Threads are machined or cut when full thread depth is needed (more than one pass necessary) for short production runs, when the blanks are not very accurate, when proximity to the shoulder in end threading is needed, for tapered threads, or when the workpiece material is not adaptable for rolling.

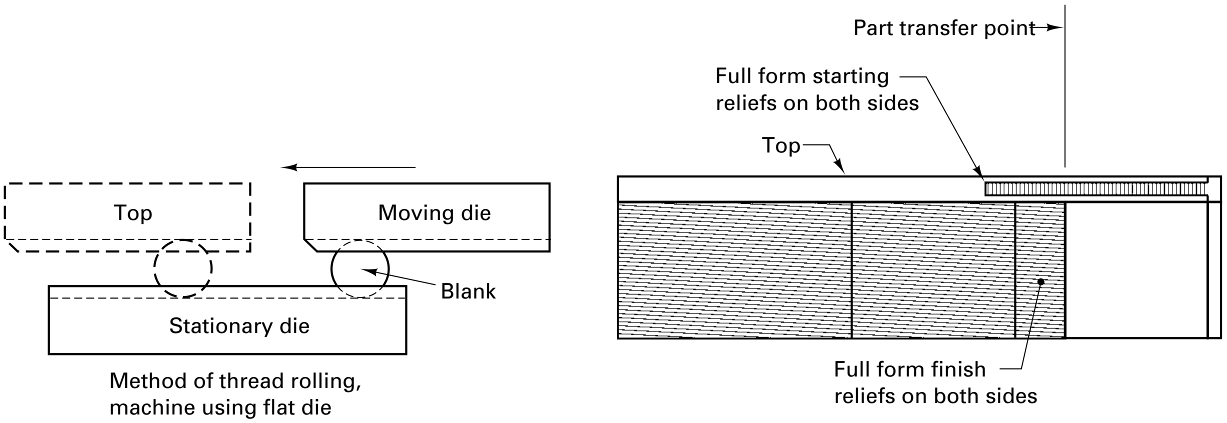

(a) Reciprocating flat die

(b) Stationary die design (top view)

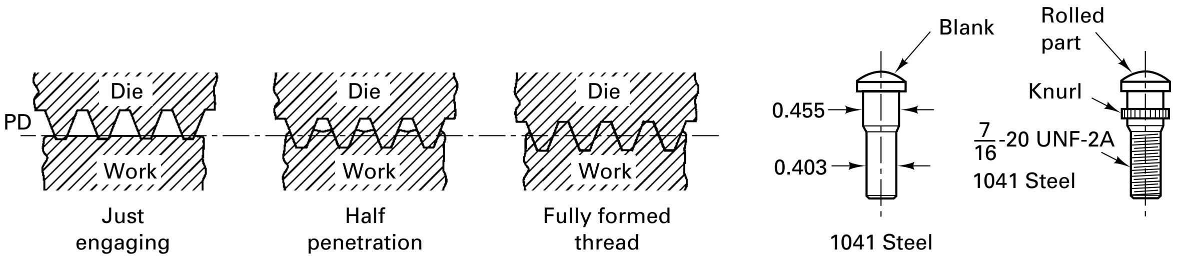

(c) Action of die forming thread

(d) Blank and finished part (on rt.) at 100 per min

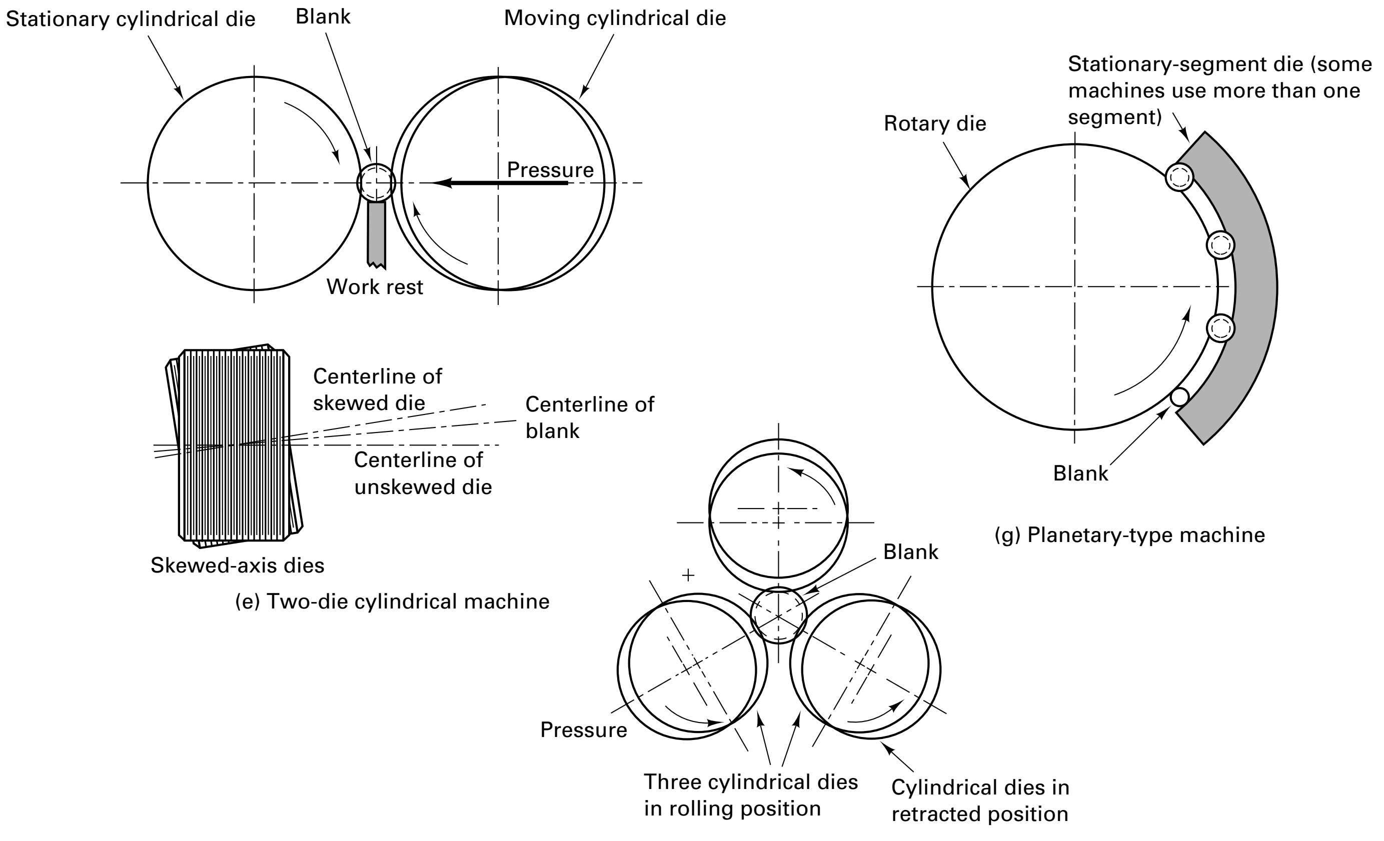

(e) Two-die cylindrical machine

(g) Planetary-type machine

(f) Three-die cylindrical machine

FIGURE 29-13 Roll forming threads using flat die thread rolling process shown in (a) and (b). The threads forming action is shown in (c) and the product in (d). Three variations of cylindrical rolling are shown in (e), (f), and (g).

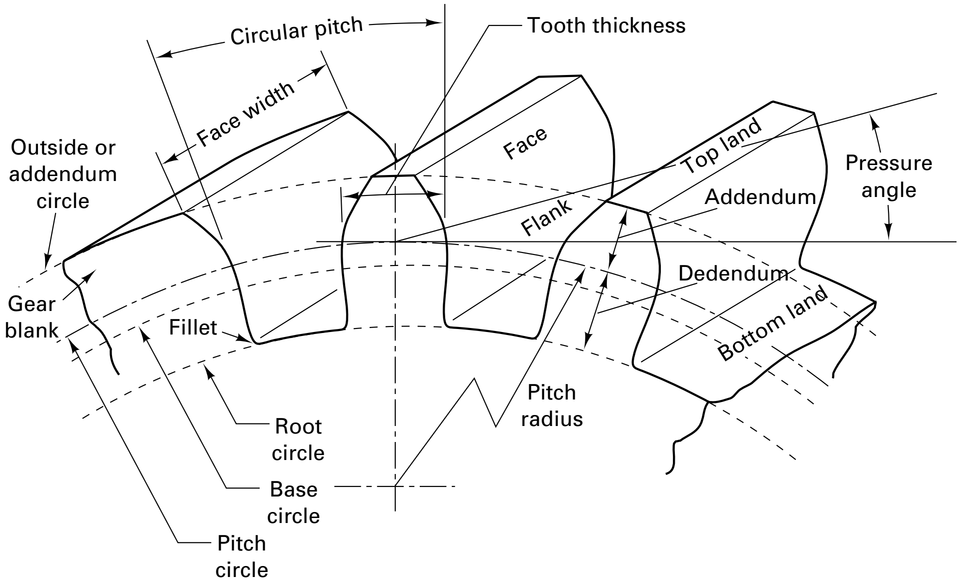

FIGURE 29-14 Gear-tooth nomenclature.

29.7 GEAR MAKING

As with threads, we need to have an introductory understanding of the product before we can understand the process.

GEAR THEORY AND TERMINOLOGY

Basically, gears are modifications of wheels, with *gear teeth* added to prevent slipping and to ensure that their relative motions are constant. However, it should be noted that the relative surface velocities of the wheels (and shafts) are determined by the diameters of the wheels. Although wooden teeth or pegs were attached to disks to make gears in ancient times, the teeth of modern gears are produced by machining or forming teeth on the outer portion of the wheel. The *pitch circle* (Figures 29-14 and 29-15) corresponds to the diameter of the wheel. Thus the angular velocity of a gear is determined by the diameter of this imaginary pitch circle. All design calculations relating to gear performance are based on the pitch-circle diameter or, more simply, the *pitch diameter* (PD).

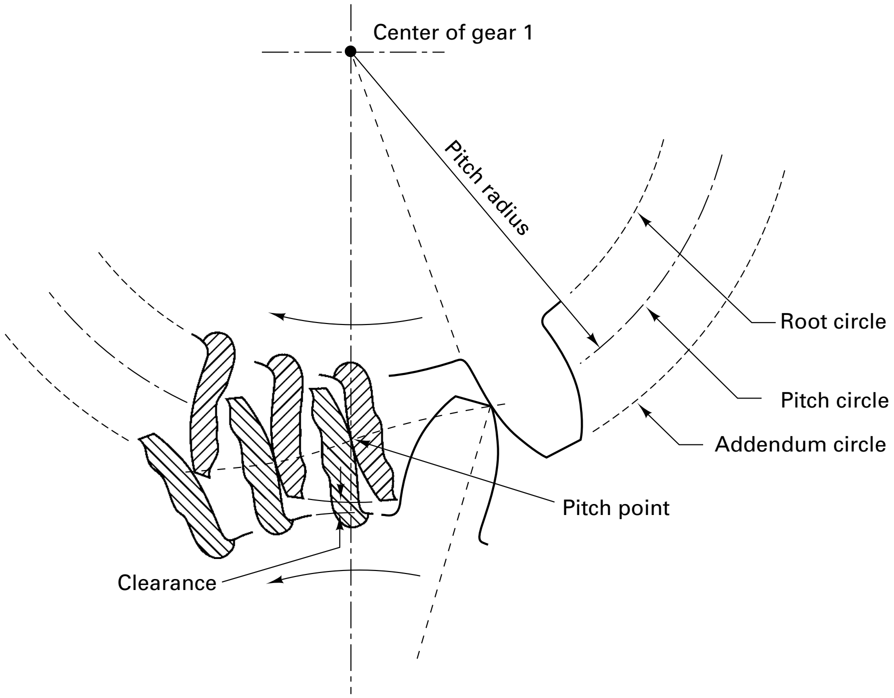

FIGURE 29-15 Tangent pitch circles between two gears produce a pitch point.

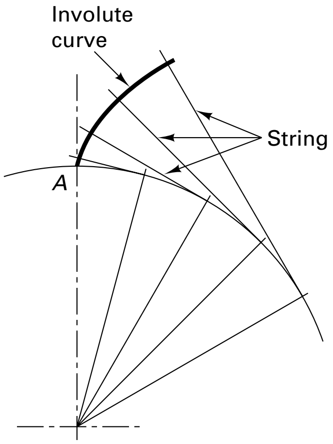

FIGURE 29-16 Method of generating an involute curve by unwinding a string from a cylinder.

For two gears to operate properly, their pitch circles must be tangential to each other. The point at which the two pitch circles are tangent, at which they intersect the centerline connecting their centers of rotation, is called the *pitch point*. The common normal at the point of contact of mating teeth must pass through the pitch point. This condition is illustrated in Figure 29-15.

To provide uniform pressure and motion and to minimize friction and wear, gears are designed to have rolling motion between mating teeth rather than sliding motion. To achieve this condition, most gears utilize a tooth form that is based on an *involute curve*. This is the curve that is generated by a *point* on a straight line when the line rolls around a *base circle*. A somewhat simpler method of developing an involute curve is that shown in Figure 29-16. By unwinding a tautly held string from a point on the base circle, point A, an involute curve is generated.

There are three other reasons for using the involute form for gear teeth. First, such a tooth form provides the desired pure rolling action. Second, even if a pair of involute gears is operated with the distance between the centers slightly too large or too small, the common normal at the point of contact between mating teeth will always pass through the pitch point. Obviously, the theoretical pitch circles in such cases will be increased or decreased slightly. Third, the *line of action* or *path of contact*—that is, the locus of the points of contact of mating teeth—is a straight line that passes through the pitch point and is tangent to the base circles of the two gears.

Cutting an involute shape in gear blanks can be done by simple form cutting (i.e., milling the shape into the workpiece) or by generating. Generating involves relative motion between the workpiece and the cutting tool. True involute tooth form can be produced by a cutting tool that has straight-sided teeth. This permits a very accurate involute tooth profile to be obtained through the use of a simple and easily made cutting tool. The straight-sided teeth are given a rolling motion relative to the workpiece to create the curved gear-tooth face, that is, the involute shape.

The basic size of gear teeth may be expressed in two ways. The common practice, especially in the United States and England, is to express the dimensions as a function of the *diametral pitch* (DP). DP *is the number of teeth (N) per unit of pitch diameter* (PD); thus (PD) = N/PD. Dimensionally, DP involves inches in the English system and millimeters in the SI system, and it is a measure of tooth size. Metric gears use the module system *(M)*, defined as *the pitch diameter divided by the number of teeth*, or $M =$ PD/N. It thus is the reciprocal of diametral pitch and is expressed in millimeters. Any two gears having the same diametral pitch or module will mesh properly if they are mounted so as to have the correct distances and relationship. The important tooth elements can be specified in terms of the diametral pitch or the module and are as follows:

1. *Addendum:* the radial distance from the pitch circle to the outside diameter.

$$addendum = \frac{1}{DP}\, inches$$

2. *Dedendum:* the radial distance from the pitch circle to the root circle. It is equal to the addendum plus the *clearance*, which is provided to prevent the outer corner of a tooth from touching against the bottom of the tooth space.
3. *Circular pitch:* the distance between corresponding points of adjacent teeth, measured along the pitch circle:

$$\pi/\text{diametral pitch}$$

4. *Tooth thickness:* the thickness of a tooth, measured along the pitch circle. When tooth thickness and the corresponding *tooth space* are equal, no *backlash* exists in a pair of mating gears.
5. *Face width:* the length of the gear teeth in an axial plane.
6. *Tooth face:* the mating surface between the pitch circle and the addendum circle.
7. *Tooth flank:* the mating surface between the pitch circle and the root circle.
8. *Pressure angle:* the angle between a tangent to the tooth profile and a line perpendicular to the pitch surface.

Four shapes of involute gear teeth are used in the United States:

1. $14\frac{1}{2}^\circ$ pressure angle, full depth (used most frequently)
2. $14\frac{1}{2}^\circ$ pressure angle, composite (seldom used)
3. 20° pressure angle, full depth (seldom used)
4. 20° pressure angle, stub tooth (second most common)

In the $14\frac{1}{2}^\circ$ full-depth system, the tooth profile outside the base circle is an involute curve. Inward from the base circle, the profile is a straight radial line that is joined with the bottom land by a small fillet. With this system, the teeth of the basic rack have straight sides. The composite system and the 20° full-depth system provide somewhat stronger teeth. However, with the 20° full-depth system considerable undercutting occurs in the dedendum area; therefore, stub teeth often are used. The addendum is shortened by 20%, thus permitting the dedendum to be shortened a similar amount. This results in very strong teeth without undercutting. Table 29-2 gives the formulas for computing the dimensions of gear teeth in the $14^1/_2^\circ$ full-depth and 20° stub-tooth systems.

PHYSICAL REQUIREMENTS OF GEARS

A consideration of gear theory leads to five requirements that must be met in order for gears to operate satisfactorily:

1. The actual tooth profile must be the same as the theoretical profile.
2. Tooth spacing must be uniform and correct.
3. The *actual* and theoretical pitch circles must be coincident and be concentric with the axis of rotation of the gear.
4. The face and flank surfaces must be smooth and sufficiently hard to resist wear and prevent noisy operation.
5. Adequate shafts and bearings must be provided so that desired center-to-center distances are retained under operational loads.

The first four of these requirements are determined by the material selection and manufacturing process. The various methods of manufacture that are used represent attempts to meet these requirements to varying degrees with minimum cost, and their effectiveness must be measured in terms of the extent to which the resulting gears embody these requirements.

Before looking at the ways to manufacture gears, let's look at some examples of gears.

TABLE 29-2 Formula for Calculating the Standard Dimensions for Involute Gear Teeth

	$14^1/_2^\circ$ Full Depth	20°, Stub Tooth
Pitch diameter (PD)	$\frac{N}{\text{DP}}$	$\frac{N}{\text{DP}}$
Addendum	$\frac{1}{\text{DP}}$	$\frac{0.8}{\text{DP}}$
Dedendum	$\frac{1.157}{\text{DP}}$	$\frac{1}{\text{DP}}$
Outside diameter	$\frac{N+2}{\text{DP}}$	$\frac{N+1.6}{\text{DP}}$
Clearance	$\frac{0.157}{\text{DP}}$	$\frac{0.2}{\text{DP}}$
Tooth thickness	$\frac{1.508}{\text{DP}}$	$\frac{1.508}{\text{DP}}$

DP = Number of teeth (N) per unit of pitch diameter (PD).

29.8 GEAR TYPES

The more common types of gears are shown in Figure 29-17. *Spur gears* have straight teeth and are used to connect parallel shafts. They are the most easily made and the cheapest of all types.

The teeth on *helical gears* lie along a helix, the angle of the helix being the angle between the helix and a pitch cylinder element parallel with the gear shaft. Helical gears can connect either parallel or nonparallel nonintersecting shafts. Such gears are stronger and quieter than spur gears because the contact between mating teeth increases more gradually and more teeth are in contact at a given time. Although they usually are slightly more expensive to make than spur gears, they can be manufactured in several ways and are produced in large numbers.

Helical gears have one disadvantage. When they are in use, a side thrust is created that must be absorbed in the bearings. *Herringbone gears* neutralize this side thrust by having, in effect, two helical-gear halves, one having a right-hand and the other a left-hand helix. The *continuous* herringbone type is rather difficult to machine but is very strong. A modified herringbone type is made by machining a groove, or gap, around the gear blank where the two sets of teeth would come together. This provides a runout space for the cutting tool in making each set of teeth.

Different types of gears

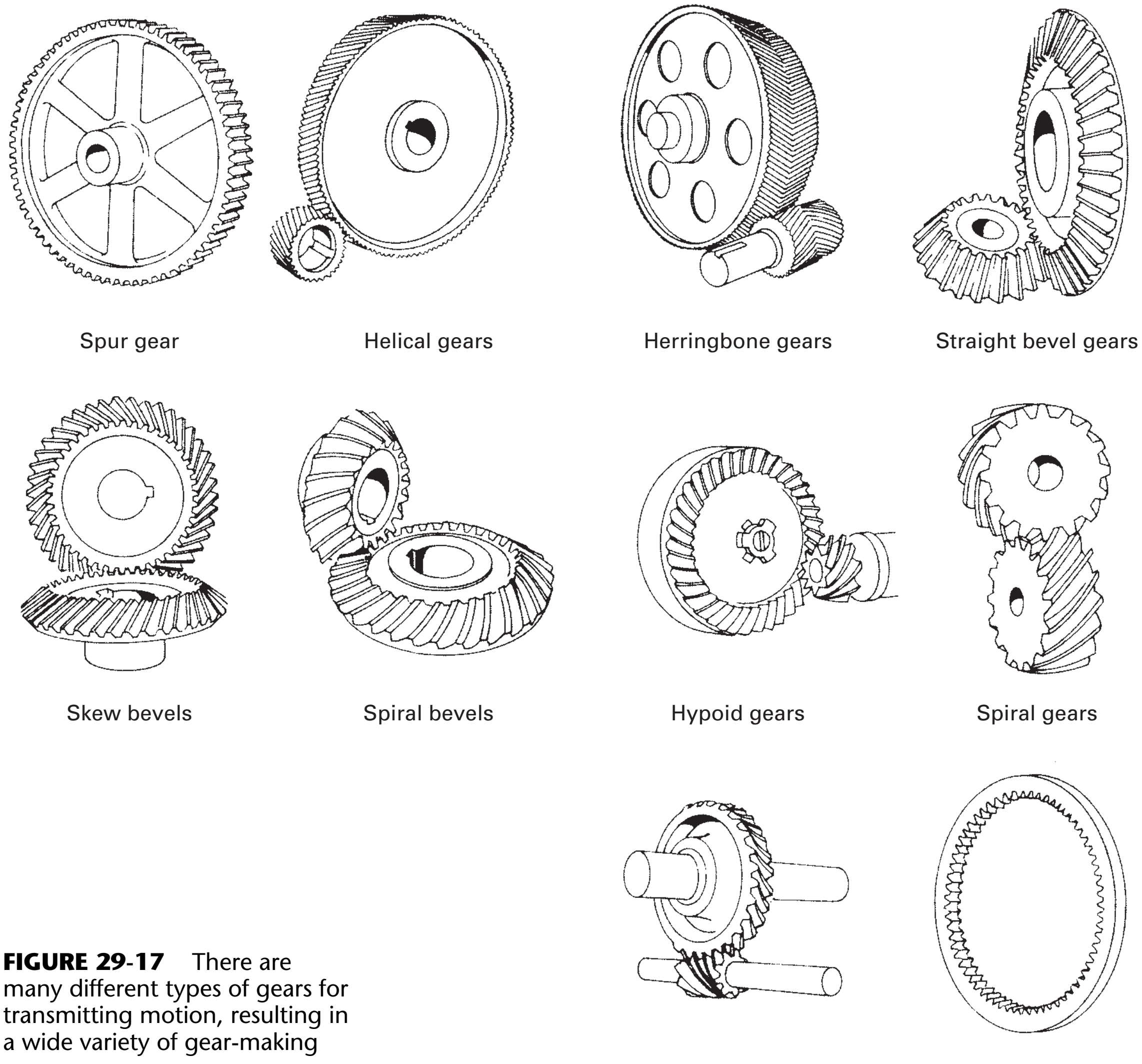

Spur gear

Helical gears

Herringbone gears

Straight bevel gears

Skew bevels

Spiral bevels

Hypoid gears

Spiral gears

Worm gears

Internal gear

FIGURE 29-17 There are many different types of gears for transmitting motion, resulting in a wide variety of gear-making processes.

A *rack* is a gear with infinite radius, having teeth that lie on a straight line on a plane. The teeth may be normal to the axis of the rack or helical so as to mate with spur or helical gears, respectively.

A *worm* is similar to a screw. It may have one or more threads, the multiple-thread type being very common. Worms usually are used in conjunction with a *worm gear*. High gear ratios are easily obtainable with this combination. The axes of the worm and worm gear are nonintersecting and are usually at right angles. If the worm has a small helix angle, it cannot be driven by the mating worm gear. This principle is frequently employed to obtain nonreversible drives. Worm gears are usually made with the top land concave to permit greater area of contact between the worm and the gear. A similar effect can be achieved by using a *conical worm*, in which the helical teeth are cut on a double-conical blank, thus producing a worm that has an hourglass shape.

Bevel gears, teeth on a cone, are used to transmit motion between intersecting shafts. The teeth are cut on the surface of a truncated cone. Several types of bevel gears are made, the types varying as to whether the teeth are straight or curved and whether the axes of the mating gears intersect. On *straight-tooth* bevel gears the teeth are straight, and if extended all would pass through a common apex. *Spiral-tooth* bevel gears have teeth that are segments of spirals. Like helical gears, this design provides tooth overlap so that more teeth are engaged at a given time and the engagement is progressive. *Hypoid* bevel gears also have a curved-tooth shape but are designed to operate with nonintersecting axes. Rear-drive automobiles used hypoid gears in the rear axle so that the drive-shaft axis can be below the axis of the axle and thus permit a lower floor height. Z*erol* bevel gears have teeth that are circular arcs, providing somewhat stronger teeth than can be obtained in a comparable straight-tooth gear. They are not used extensively. When a pair of bevel gears are the same size and have their shafts at right angles, they are termed *miter gears*.

A *crown gear* is a special form of bevel gear having a 180° cone apex angle. In effect, it is a disk with the teeth on the side of the disk. It may also be thought of as a rack that has been bent into a circle so that its teeth lie in a plane. The teeth may be straight or curved. On straight-tooth crown gears the teeth are radial. Crown gears are seldom used, but they have the important quality that they will mesh properly with a bevel gear of any cone angle, provided that the bevel gear has the same tooth form and diametral pitch. This important principle is incorporated in the design and operation of two very important types of gear-generating machines that will be discussed later.

Most gears are of the external type, the teeth forming the outer periphery of the gear. Internal gears have the teeth on the inside of a solid ring, pointing toward the center of the gear.

29.9 GEAR MANUFACTURING

Whether produced in large or small quantities, in cells, or in job shop batches, the sequence of processes for gear manufacturing requires four sets of operations. See Figure 29-18.

1. Blanking (turning)
2. Gear cutting (hobbing and shaving)
3. Heat treatment
4. Grinding

Blanking refers to the initial forming or machining operations that produce a semifinished part ready for gear cutting, starting from a piece of raw material. Turning on chuckers or lathes, facing and centering of shafts, milling, and sometimes grinding fall into this category of operations. Good-quality blanks are essential in precision gear manufacturing.

Hobbing, shaping, and shaving machines are the most frequently used machines for gear cutting, producing gears for automotive, truck, agricultural, and construction equipment. Other processes used in industrial gear production include broaching, rolling, grinding, milling, and shaving. The process selected depends on finding a cost-effective application based on quality specification, production volumes, and economic conditions.

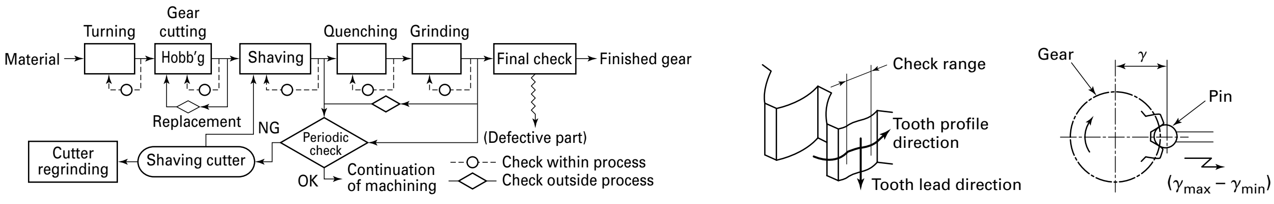

(a) Manufacturing process

Tooth-face measurement

Tooth runout

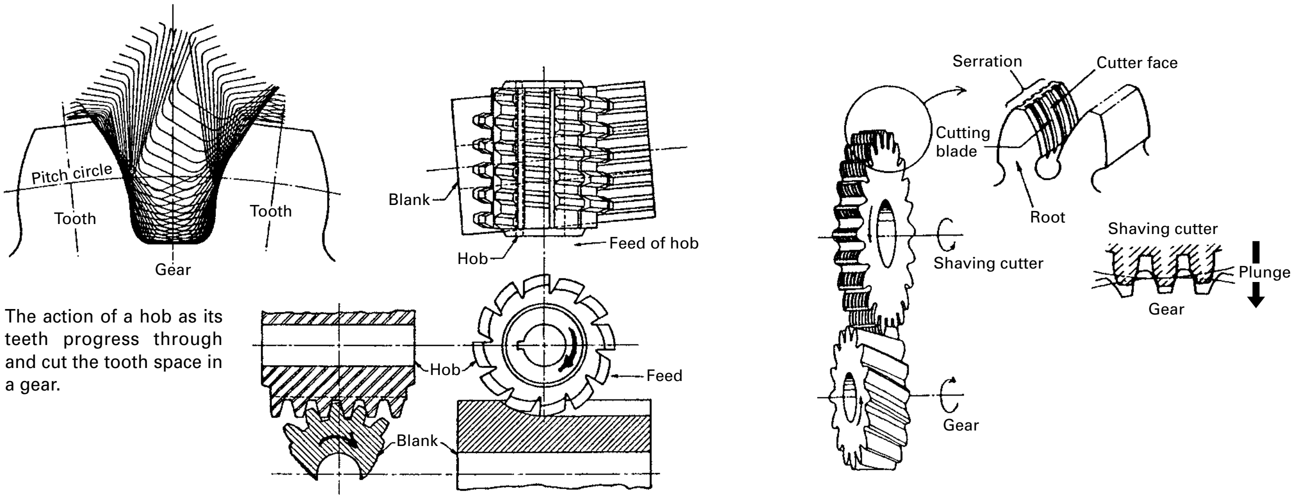

The action of a hob as its teeth progress through and cut the tooth space in a gear.

Relationship of the hob and the gear blank in machining a spur gear

Shaving cutter and gear

(b) Hobbing

(c) Shaving

FIGURE 29-18 The typical gear-making process (for very accurate gears) involves both hobbing and shaving followed by grinding after heat treating.

The gear-cutting or -machining operations can be divided into operations executed prior to heat treatment, when the material is still soft and easily machinable, and after heat treatment, performed on parts that have acquired high hardness and strength.

Heat treatment gives the material the strength and durability to withstand high loads and wear but results in a reduction in dimensional and geometrical accuracy. The metallurgical transformations that occur during hardening, quenching, and tempering cause a general quality deterioration in the gears. Therefore, precision grinding operations are used on external and internal bearing diameters, critical length dimensions, and fine surface finishes after heat treatment. Cylindrical grinders, angle-head grinders, internal grinders, and surface grinders are commonly used.

Gears are made in very large numbers by cold-roll forming; in addition, significant quantities are made by extrusion, by blanking, by casting, and some by powder metallurgy and by a forging process. However, it is only by machining that all types of gears can be made in all sizes, and although roll-formed gears can be made with accuracy sufficient for most applications, even for automobile transmissions, machining still is unsurpassed for gears that must have very high accuracy. Also, roll forming can be used only on ductile metals.

■ 29.10 MACHINING OF GEARS

FORM MILLING

Form cutting or *form milling* on a horizontal milling machine is illustrated in Figure 29-19. The multiple-tooth form cutter has the same form as the *space* between adjacent teeth. The tool is fed radially toward the center of the gear blank to the desired tooth depth, then across the tooth face to obtain the required tooth width. When one tooth space has been completed, the tool is withdrawn, the gear blank is indexed using a dividing head, and the next tooth space is cut. In machining gears by the form-cutting process, the form cutter is mounted on the machine arbor, and the gear blank is mounted on a mandrel held between the centers of some type of indexing device. Basically, form cutting is a simple and flexible method of machining gears. The equipment and cutters required are relatively

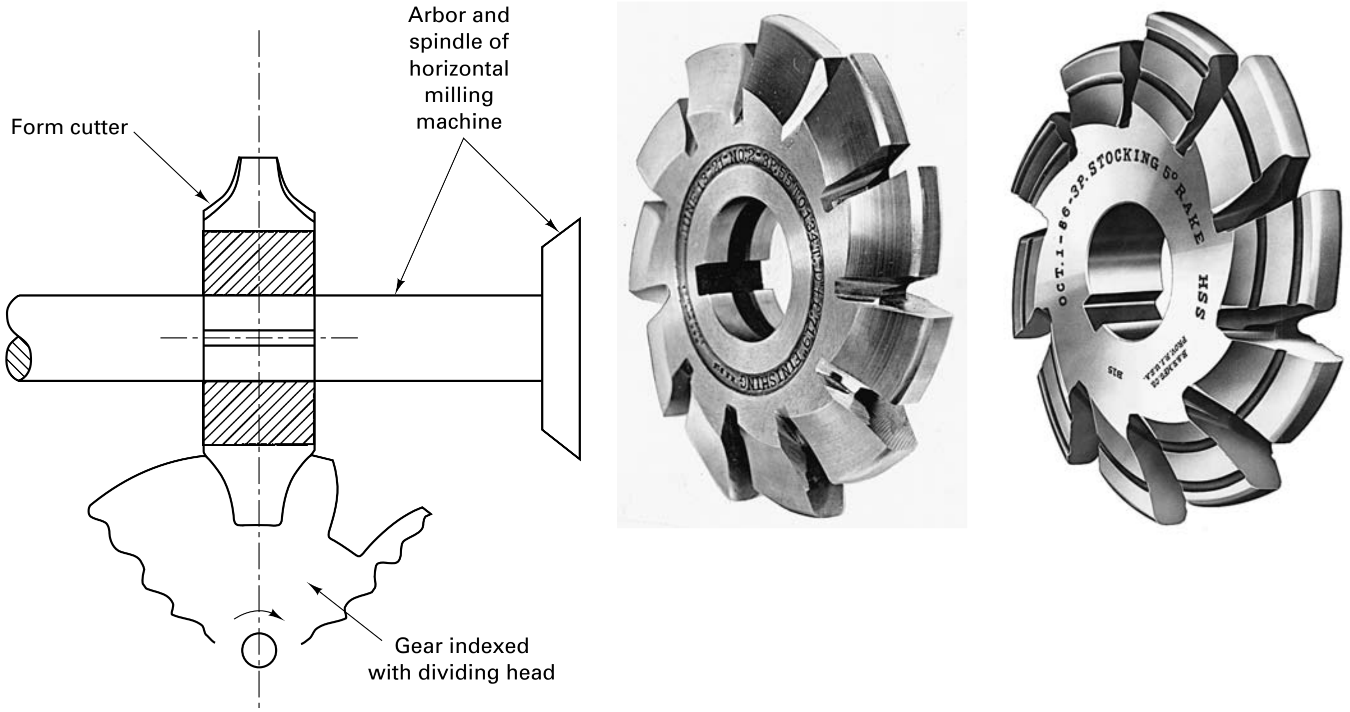

FIGURE 29-19 The basic method of machining a gear using a form cutter (left) to mill out the space between the teeth using the form cutter (middle) or the stocking cutter (right) to machine the gear. *(Courtesy of Brown and Sharpe Manufacturing Company.)*

simple, and standard machine tools (milling machines) are often used. However, in most cases the procedure is quite slow, and considerable care is required on the part of the operator. Therefore, this process is usually employed where only one or a few gears are to be made. When a helical gear is to be cut, the table must be set at an angle equal to the helix angle, and the dividing head is geared to the longitudinal feed screw of the table so that the gear blank will rotate as it moves longitudinally.

Standard cutters are usually employed in form-cutting gears. In the United States, these come in eight sizes for each diametral pitch and will cut gears having any number of teeth. A single cutter will not produce a theoretically perfect tooth profile for all sizes of gears in the range for which it is intended. However, the change in tooth profile over the range covered by each cutter is very slight, and most of the time satisfactory results can be achieved. When greater accuracy is required, half-number cutters can be obtained. Cutters are available for all common diametral pitches and for $14^1/_2°$ and 20° pressure angles. If the amount of metal that must be removed to form a tooth space is large, roughing cuts may be taken with a *stocking cutter*. The stepped sides of the stocking cutter remove most of the metal and leave only a small amount to be removed subsequently by the regular form cutter in a finish cut.

Straight-tooth bevel gears can be form cut on a milling machine, but this is seldom done. Because the tooth profile in bevel gears varies from one end of the tooth to the other, after one cut is taken to form the correct tooth profile at the smaller end, the relationship between the cutter and the blank must be altered. Shaving cuts are then taken on the side of each tooth to form the correct profile throughout the entire tooth length.

Although the form cutting of gears on a milling machine is a flexible process and is suitable for gears that are not to be operated at high speeds or that need not operate with extreme quietness, the process is slow and requires skilled labor. Semiautomatic machines are available for making gears by the form-cutting process. The procedure utilized is essentially the same as on a milling machine, except that, after setup, the various operations are completed automatically. Gears made on such machines are no more accurate than those produced on a milling machine, but the possibility of error is less, and they are much cheaper because of reduced labor requirements. For large quantities, however, form cutting is not used.

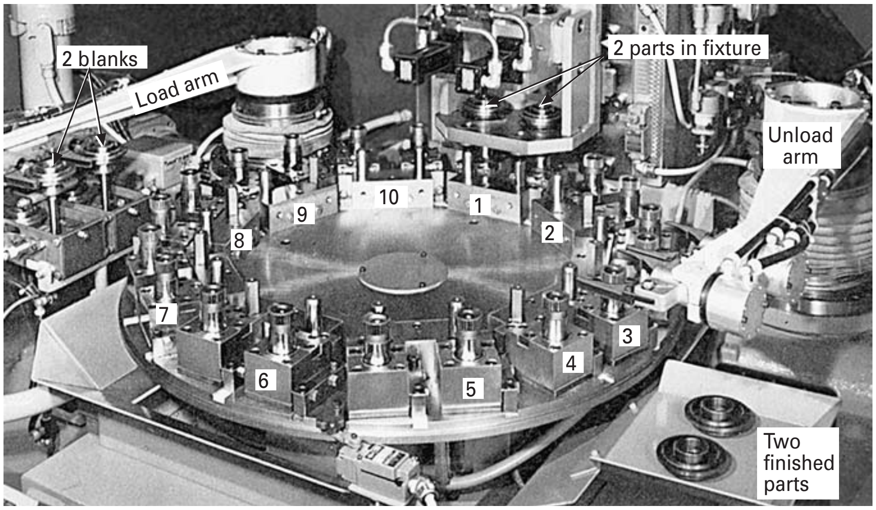

FIGURE 29-20 Blind gear spline broaching machine for producing internal gears. The machine has automated pick-and-place arms for load/unload. *(Courtesy of Apex Broach and Machine Company.)*

BROACHING

Broaching is another way to form cut teeth. All the tooth spaces are cut simultaneously, and the tooth is formed progressively. The circular table in Figure 29-20 holds 10 sets of progressive tooling. The table rotates, moving one set of tooling at a time under two workpieces. The arms load and unload a set of parts every 15 seconds, so the cycle time is very quick. Excellent gears can be made by *broaching*. However, a separate broach must be provided for each size of gear. The tooling tends to be expensive, restricting this method to large volumes.

GEAR GENERATING

Most high-quality gears that are made by machining are made by the *generating process*. This process is based on the principle that any two involute gears, or any gear and a rack, of the same diametral pitch will mesh together properly. Utilizing this principle, one of the gears (or the rack) is made into a cutter by proper sharpening. It can be used to cut into a mating gear blank and thus generate teeth on the blank. The two principal methods for gear generating are *shaping* and *hobbing*.

SHAPING

To carry out the shaping process, the cutter and the gear blank must be attached rigidly to their respective shafts, and the two shafts must be interconnected by suitable gearing so that the cutter and the blank rotate positively with respect to each other and have the same pitch-line velocities. To start cutting the gear, the cutter is reciprocated vertically and is fed radially into the blank between successive strokes. When the desired tooth depth has been obtained, the cutter and blank are then slightly indexed after each cutting stroke. The resulting generating action is indicated schematically in Figure 29-21a and shown in the cutting of an actual gear tooth in Figure 29-21b. Figure 29-22 shows a machine called a gear shaper. *Gear shapers* generate gears by a reciprocating tool motion. The gear blank is mounted on the rotating table (or vertical spindle) and the cutter on the end of a vertical, reciprocating spindle. The spindle and the table are connected by means of gears so that the cutter and gear blank revolve with the same pitch-line velocity. Cutting occurs on the downstroke (sometimes on the upstroke). At the end of each cutting stroke, the spindle carrying the blank retracts slightly to provide clearance between work and tool on the return stroke.

The conventional cutter for gear shaping is made from high-speed steel, which can be coated to improve wear life with a superhard layer of titanium nitride (TiN) using the physical vapor deposition (PVD) process. Recently, new throwaway disk-shaped insert tools have been developed for gear shaping, eliminating regrinding and recoating operations on the conventional tools. Regrinding the conventional cutter requires two adjustments (resetting operations) on the machine tool. Because the throwaway blades are all sized the same, machine resetting after cutting tool changeover is eliminated.

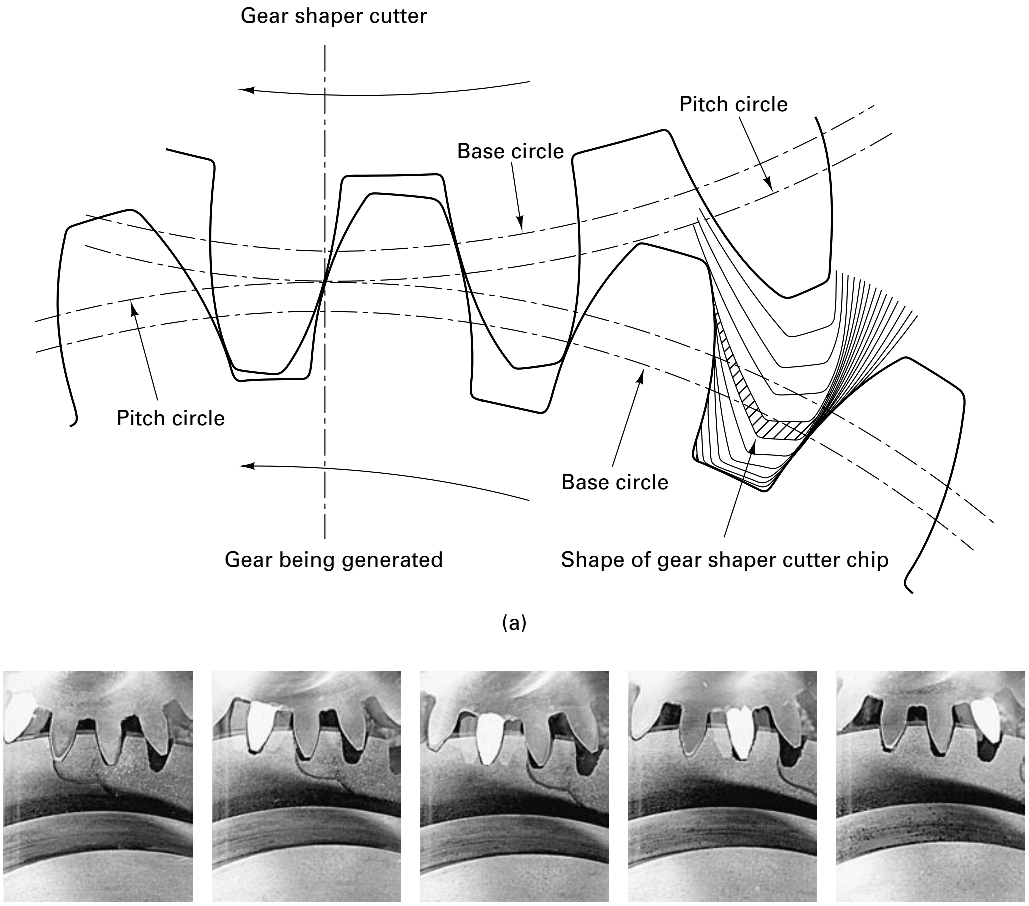

(a)

(b) (c) (d) (e) (f)

FIGURE 29-21 (Top) Generating action of a Fellows gear shaper cutter. (Bottom) Series of photographs showing various stages in generating one tooth in a gear by means of a gear shaper, action taking place from right to left, corresponding to the diagram above. One tooth of the cutter was painted white. *(Courtesy of Fellows Gear Shaper Company.)*

Either straight- or helical-tooth gears can be cut on gear shapers. To cut helical teeth, both the cutter and the blank are given an oscillating rotational motion during each stroke of the cutter, turning in one direction during the cutting stroke and in the opposite direction during the return stroke. Because the cutting stroke can be adjusted to end at any desired point, gear shapers are particularly useful for cutting cluster gears. Some machines can be equipped with two cutters simultaneously to cut two gears, often of different diameters. Gear shapers can also be adapted for cutting internal gears.

Special types of gear shapers have been developed for mass-production purposes. The *rotary gear shaper* is essentially 10 shaper units mounted on a rotating base and having a single drive mechanism. Nine gears are cut simultaneously while a finished gear is removed and a new blank is put in place on the tenth unit. *Planetary gear shapers* holding six gear blanks move in planetary motion about a large, central gear cutter. The cutter has no teeth in one portion to provide a space where the gear can be removed and a new blank placed on the empty spindle.

CNC gear shapers are now available with hydromechanical stroking systems that produce a uniform cutting velocity during the cutting portion of the downstroke. These machines can operate at 500 to 1700 rpm and use TiN-coated cutters to enhance tool life. *Vertical shapers* for gear generating have a vertical ram and a round table that can be rotated in a horizontal plane by either manual or power feed. These machine tools are sometimes called *slotters*. Usually, the ram is pivoted near the top so that it can be swung outward from the column through an arc of about 10°.

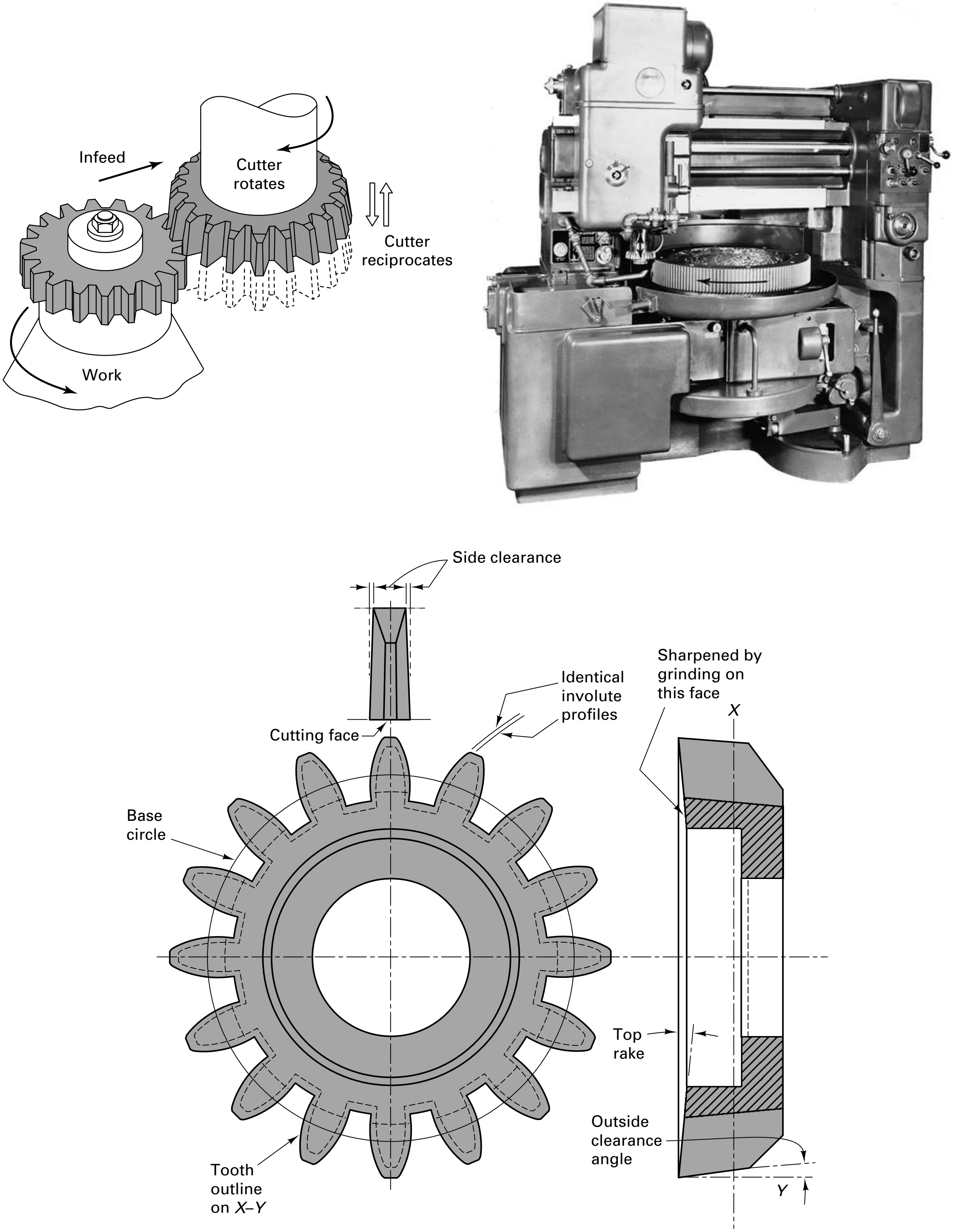

FIGURE 29-22 This machine tool is a gear shaper. The blank is rotating while the cutter is reciprocating vertically, as shown in the inset. The tool is very complex and is shown in detail below. *(Courtesy Fellows Gear Shaper Company.)*

Because one circular and two straight-line motions and feeds are available, vertical shapers are very versatile tools and thus find considerable use in one-of-a-kind manufacturing. Not only can vertical and inclined flat surfaces be machined, but external and internal cylindrical surfaces can be generated by circular feeding of the table between strokes. This may be cheaper than turning or boring for very small lot sizes. A vertical shaper can be used for generating gears or machining curved surfaces, interior surfaces, and arcs by using a stationary tool and rotating the workpiece. A *keyseater* is a special type of vertical shaper designed and used exclusively for machining keyways on the inside of wheel and gear hubs. For machining continuous herringbone gears, a *Sykes gear-generating machine* is used.

HOBBING

Involute gear teeth could be generated by a cutter that has the form of a rack. Such a cutter would be simple to make but has two major disadvantages. First, the cutter (or the blank) would have to reciprocate, with cutting occurring only during one stroke direction. Second, because the rack would have to move longitudinally as the blank rotated, the rack would need to be very long (or the gear very small) or the two would not be in mesh after a few teeth were cut. A *hob* overcomes the preceding two difficulties. As shown in Figure 29-23, a hob can be thought of, basically, as one long rack tooth that has been wrapped around a cylinder in the form of a helix and fluted at intervals to provide a number of cutting edges. Relief is provided behind each of the teeth. The cross section of each tooth, normal to the helix, is the same as that of a rack tooth. (A hob can also be thought of as a gashed worm gear.)

The action of a *hobbing* machine cutting a spur gear is illustrated in Figure 29-23. To cut a spur gear, the axis of the hob must be set off from the normal to the rotational axis of the blank by the helix angle of the hob. In cutting helical gears, the hob must be set over an additional amount equal to the helix angle of the gear. The cutting of a gear by means of a hob is a continuous action. The hob and the blank are connected by proper gearing so that they rotate in mesh. To start cutting a gear, the rotating hob is fed inward until the proper setting for tooth depth is obtained. The hob is then fed in a direction parallel with the axis of rotation of the blank. As the gear blank rotates, the teeth are generated and the feed of the hob across the face of the blank extends the teeth to the desired tooth-face width.

Hobbing is rapid and economical. More gears are cut by this process than by any other. The process produces excellent gears and can also be used for splines and sprockets. Single-, double-, and triple-thread hobs are used. Multiple-thread types increase the production rate but do not produce accuracy as high as single-thread hobs.

Gear-hobbing machines are made in a wide range of sizes. Machines for cutting accurate large gears are frequently housed in temperature-controlled rooms, and the temperature of the cutting fluid is controlled to avoid dimensional change due to variations in temperature.

COLD-ROLL FORMING

The manufacture of gears by *cold-roll forming* has been highly developed and widely adopted in recent years. Currently, millions of high-quality gears are produced annually by this process; many of the gears in automobile transmissions are made this way. As indicated in Figure 29-24, the process is basically the same as that by which screw threads are roll formed, except that in most cases the teeth cannot be formed in a single rotation of the forming rolls; the rolls are fed inward gradually during several revolutions.

Because of the metal flow that occurs, the top lands of roll-formed teeth are not smooth and perfect in shape; a depressed line between two slight protrusions can often be seen, as shown encircled in Figure 29-24. However, because the top land plays no part in gear-tooth action, if there is sufficient clearance in the mating gear, this causes no difficulty. Where desired, a light turning cut is used to provide a smooth top land and correct addendum diameter.

The hardened forming rolls are very accurately made, and the roll-formed gear teeth usually have excellent accuracy. In addition, because the severe cold working pro-

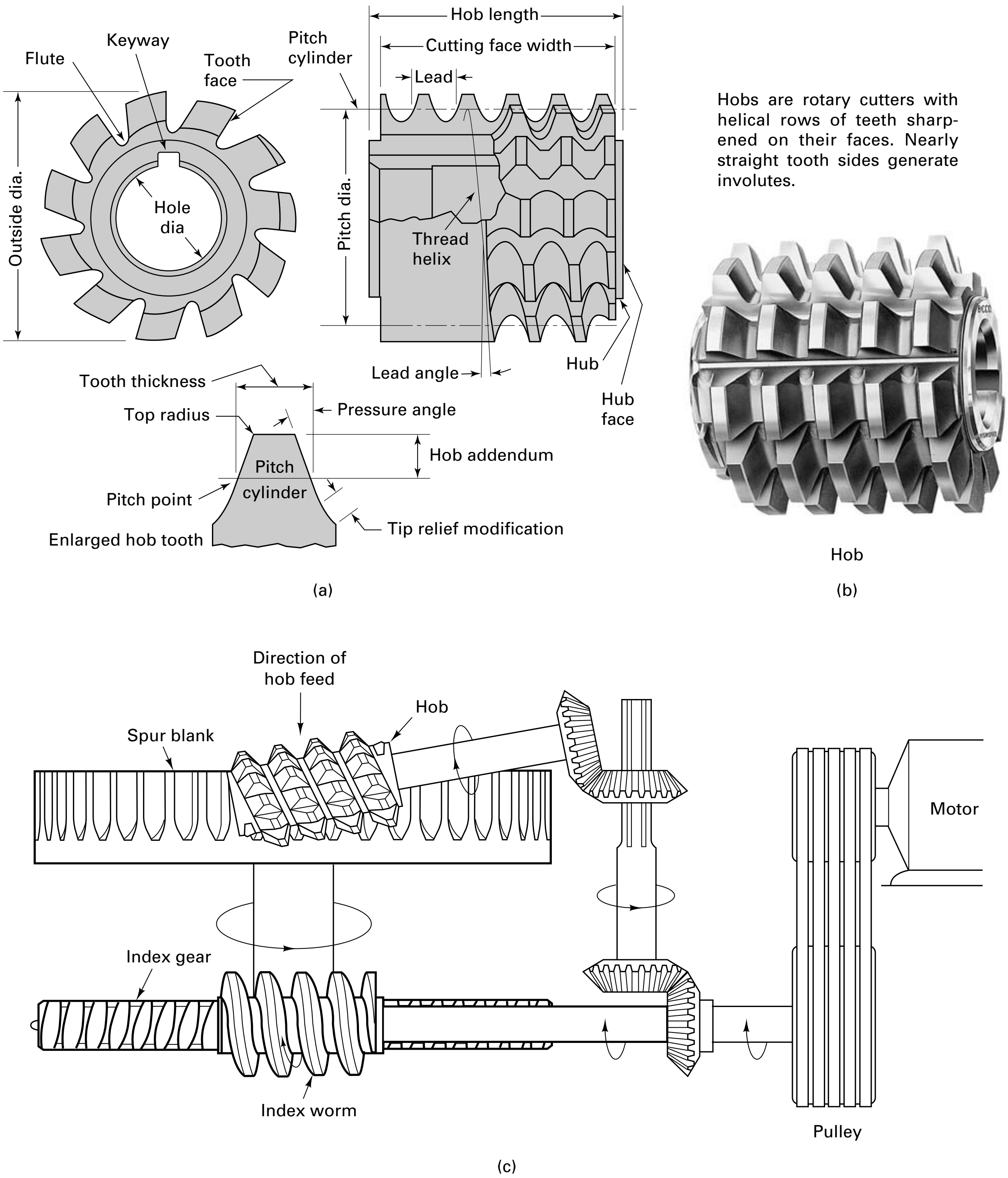

Hobs are rotary cutters with helical rows of teeth sharpened on their faces. Nearly straight tooth sides generate involutes.

(a)

(b)

(c)

FIGURE 29-23 (a) Three views of hob and gear blanks (small spur gear). (b) Hob. (c) Schematic of mechanism of a hobbing machine, shown hobbing a large spur gear.

duces tooth faces that are much smoother and harder than those on the typical machined gear, they seldom require hardening or further finishing, and they have excellent wear characteristics.

The process is rapid (up to 50 times faster than gear machining) and easily mechanized. No chips are made and thus less material is needed. Less skilled labor is required. Small gears are often made by rolling a length of shaft and then slicing off the individual gear blanks. Usually, soft steel is required and 4 to 5 in. in diameter is about the limit, with fewer than six teeth, coarser than 12 diametral pitch, and no pressure angle less than 20°.

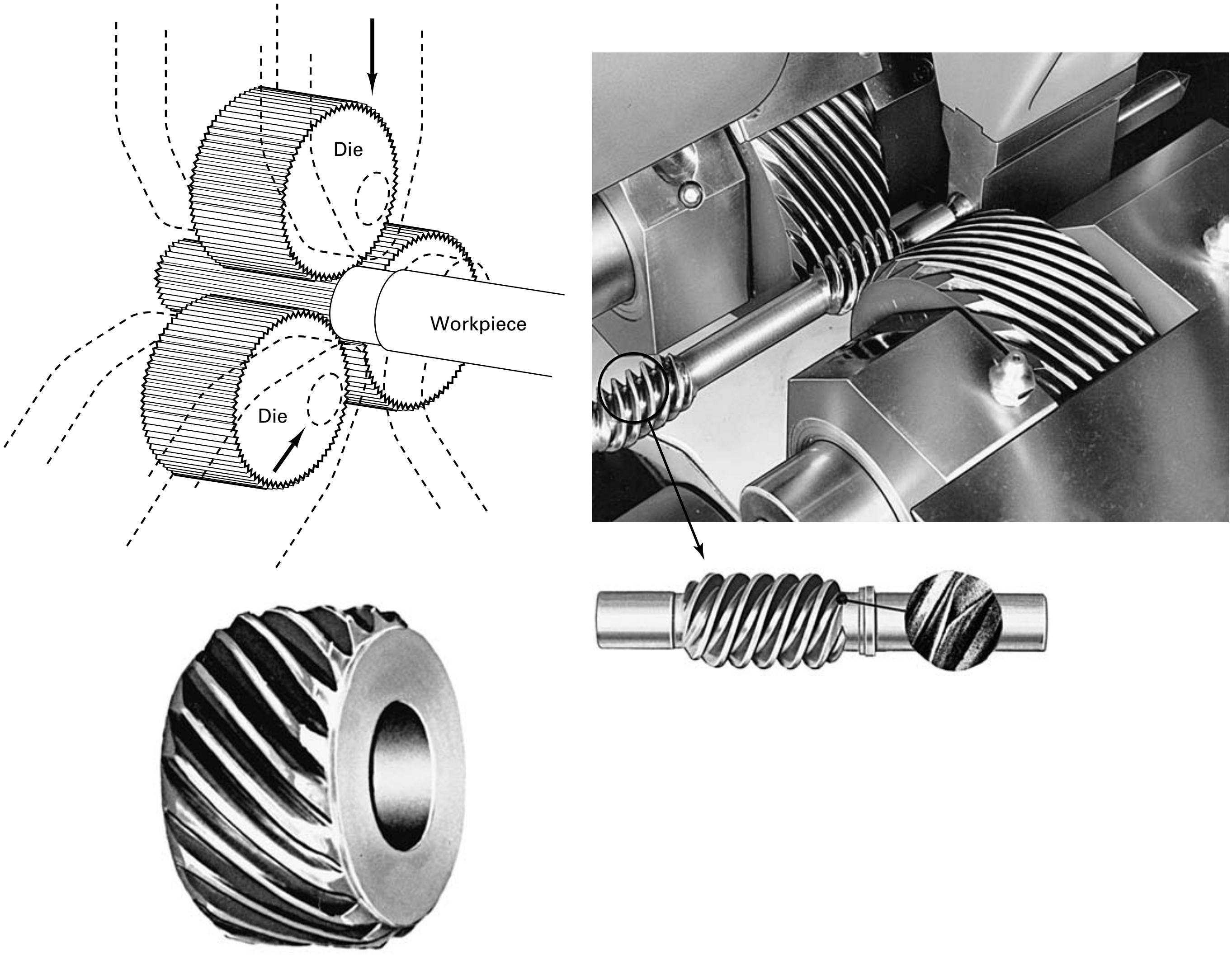

FIGURE 29-24 On the upper left, the method for cold forming gear teeth on a spline using three dies is shown. (Upper right) Worm gear being roll formed by means of two rotating rolling tools with typical worm made by rolling. (Lower left) Gear made by rolling. *(Courtesy of Landis Machine Company.)*

OTHER GEAR-MAKING PROCESSES

Gears can be made by the various casting processes. *Sand-cast gears* have rough surfaces and are not accurate dimensionally. They are used only for services where the gear moves slowly and where noise and inaccuracy of motion can be tolerated. Gears made by *die casting* are more accurate and have fair surface finish. They can be used to transmit light loads at moderate speeds. Gears made by *investment casting* may be accurate and have good surface characteristics. They can be made of strong materials to permit their use in transmitting heavy loads. In many instances, gears that are to be finished by machining are made from cast blanks, and in some larger gears the teeth can be cast to approximate shape to reduce the amount of machining.

Large quantities of gears are produced by *blanking* in a punch press. The thickness of such gears usually does not exceed about $^{1}/_{16}$ in. By shaving the gears after they are blanked, excellent accuracy can be achieved. Such gears are used in clocks, watches, meters, and calculating machines. *Fine blanking* is also used to produce thin, flat gears of good quality.

High-quality gears, both as to dimensional accuracy and surface quality, can be made by the *powder metallurgy process*. Usually, this process is employed only for small sizes, ordinarily less than 1 in. in diameter. However, larger and excellent gears are made by forging powder metallurgy preforms. This results in a product of much greater density and strength than usually can be obtained by ordinary powder metallurgy methods, and the resulting gears give excellent service at reduced cost. Gears made by this process often require little or no finishing.

Large quantities of plastic gears are made by *plastic molding*. The quality of such gears is only fair, and they are suitable only for light loads. Accurate gears suitable for heavy loads are frequently machined out of laminated plastic materials. When such gears are mated with metal gears, they have the quality of reducing noise.

Quite accurate small gears can be made by the *extrusion* process. Typically, long lengths of rod, having the cross section of the desired gear, are extruded. The individual gears are then sawed from this rod. Materials suitable for this process are brass, bronze, aluminum alloys, magnesium alloys, and, occasionally, steel.

Flame machining (oxyacetylene cutting) can be used to produce gears that are to be used for slow-moving applications wherein accuracy is not required.

A few gears are made by the hot-roll-forming process. In this process a cold master gear is pressed into a hot blank as the two are rolled together.

■ 29.11 GEAR FINISHING

To operate efficiently and have satisfactory life, gears must have accurate tooth profiles and the faces of the teeth must be smooth and hard. These qualities are particularly important when gears must operate quietly at high speeds. When they are produced rapidly and economically by most processes except cold-roll forming, the tooth profiles may not be as accurate as desired, and the surfaces are somewhat rough and subject to rapid wear. Also, it is difficult to cut gear teeth in a hardened gear blank, and therefore economy dictates that the gear be cut in a relatively soft blank and subsequently be heat treated to obtain greater hardness. Such heat treatment usually results in some slight distortion and surface roughness. Although most roll-formed gears have sufficiently accurate profiles, and the tooth faces are adequately smooth and frequently have sufficient hardness, this process is feasible only for relatively small gears. Consequently, a large proportion of high-quality gears are given some type of finishing operation after they have received primary machining or after heat treatment. Most of these finishing operations can be done quite economically because only minute amounts of metal are removed and they are fast and often automatic.

Gear shaving is the most commonly used method for finishing spur- and helical-gear teeth prior to hardening. The gear is run, at high speed, in contact with a shaving tool, usually of the type shown in Figure 29-25. Such a tool is a very accurate, hardened, and ground gear that contains a number of peripheral serrations, thus forming a series of sharp cutting edges on each tooth. The gear and shaving cutter are run in mesh with their

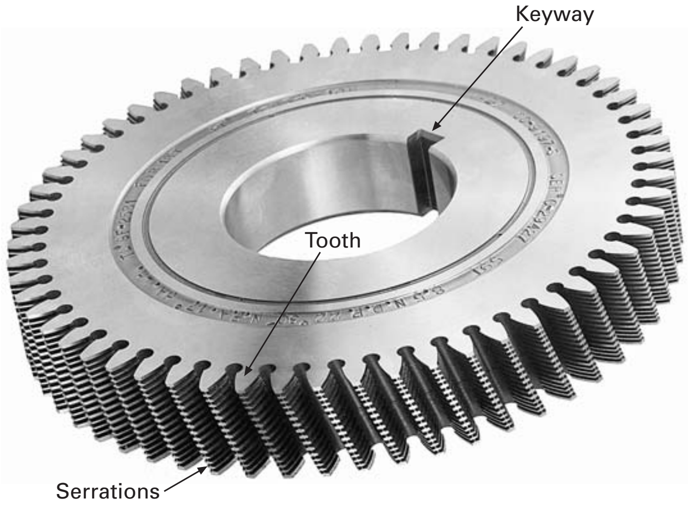

FIGURE 29-25 Rotary gear shaving cutter (see Figures 29-18 and 29-26).

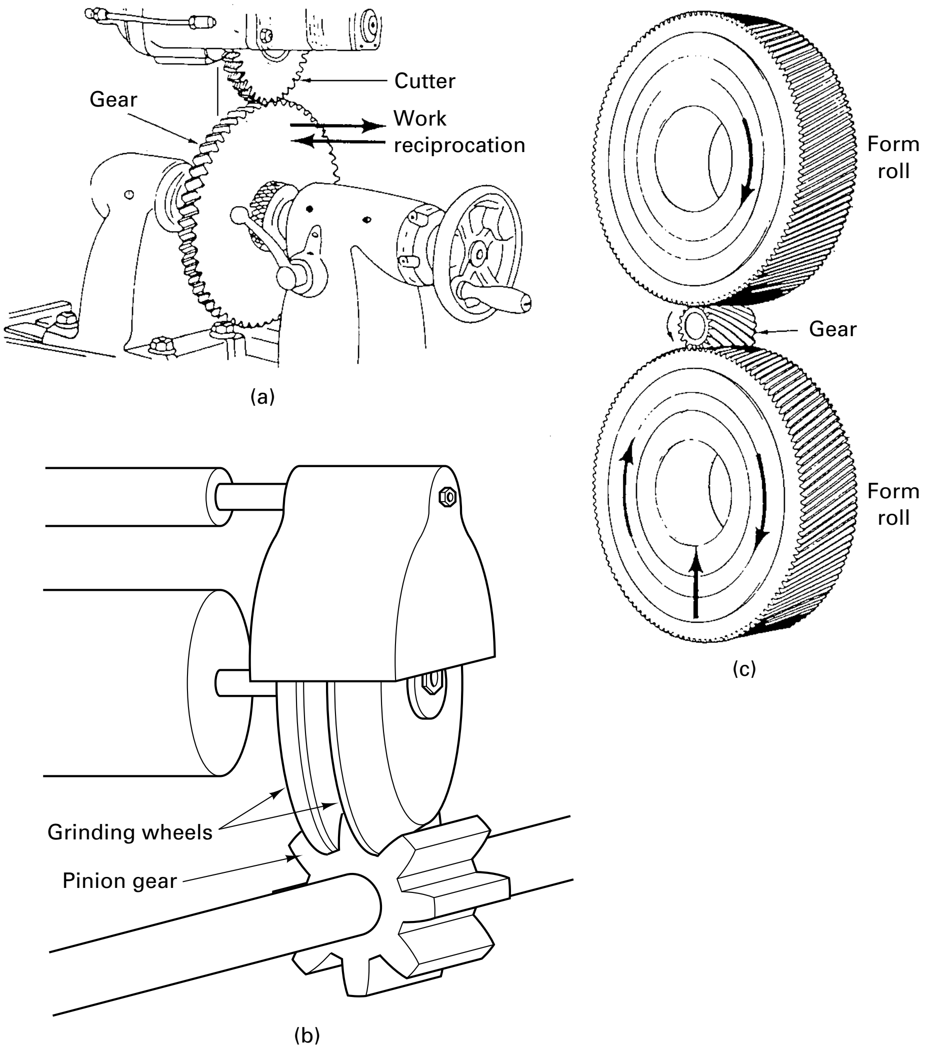

FIGURE 29-26 Three methods for gear finishing are (a) shaving using a special cutter—see Figure 29-25, (b) grinding using form grinding wheels, and (c) using form rolls, that is, roll forming/finishing.

axes crossed at a small angle, usually about 10° (Figure 29-26). As they rotate, the gear is reciprocated longitudinally across the shaving tool (or vice versa). During this action, which usually requires less than one minute, very fine chips are *shaved* from the gear-tooth faces, thus eliminating any high spots and producing a very accurate tooth profile.

Rack shaving cutters are sometimes used for shaving small gears, the cutter reciprocating lengthwise, causing the gear to roll along it, as it is moved sideways across the cutter and fed inward.

Although shaving cutters are costly, they have a relatively long life because only a very small amount of metal is removed, usually 0.001 to 0.004 in. Some gear-shaving machines produce a slight crown on the gear teeth during shaving. Some gears are not hardened prior to shaving, although it is possible to remove very small amounts of metal from hardened gears if they are not too hard. However, modern heat-treating equipment makes it possible to harden gears after shaving without harmful effects, and therefore this practice is followed if possible.

Roll finishing is a cold-forming process that is used to finish helical gears. The unhardened gear is rolled with two hardened, accurately formed rolling dies. The center distance between the dies is reduced to cold work the surfaces and produce highly accurate tooth forms. High points on the unhardened gear are plastically deformed so that a smoother surface and more accurate tooth form are achieved. Because the operation is one of localized cold working, some undesirable effects may accrue, such as localized residual stresses and nonuniform surface characteristics. Surface finishes of 6 to 8 μm have been achieved. If roll finishing is to be used, attention must be paid to the prerolled geometry. Designers should consult the manufacturers of gear-rolling machines for specific recommendations.

Grinding is used to obtain very accurate teeth on hardened gears. Two methods are used. One employs a formed grinding wheel that is trued to the exact form of a tooth by means of diamonds mounted on a special holder and guided by a large template. The other method is involute-generation grinding, which uses straight-sided grinding wheels that simulate one side of a rack tooth. The surface of the gear tooth is ground as the gear rolls (and reciprocates) past the grinding wheels. Grinding produces very accurate gears, but because it is slow and expensive, it is used only on the highest-quality, hardened gears.

Lapping can also be used for finishing hardened gears. The gear to be finished is run in contact with one or more cast iron lapping gears under a flow of very fine abrasive in oil. Because lapping removes only a very small amount of metal, it is usually employed on gears that have previously been shaved and hardened. This combination of processes produces gears that are nearly equal to ground gears in quality, but at considerably lower cost.

29.12 GEAR INSPECTION

As with all manufactured products, gears must be checked to determine whether the resulting product meets the design specifications and requirements. Because of their irregular shape and the number of factors that must be measured, inspection of gears is somewhat difficult. Among the factors to be checked are the linear tooth dimensions such as thickness, spacing, depth, and so on; tooth profile; surface roughness; and noise. Several special devices, most of them automatic or semiautomatic, are used for such inspection.

Gear-tooth vernier calipers can be used to measure the thickness of gear teeth on the pitch circle (Figure 29-27). CNC gear inspection machines (Figure 29-28) can quickly check several factors, including variations in circular pitch, involute profile, lead,

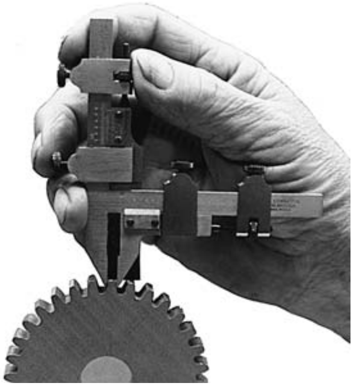

FIGURE 29-27 Using gear-tooth vernier calipers to check the tooth thickness at the pitch circle.

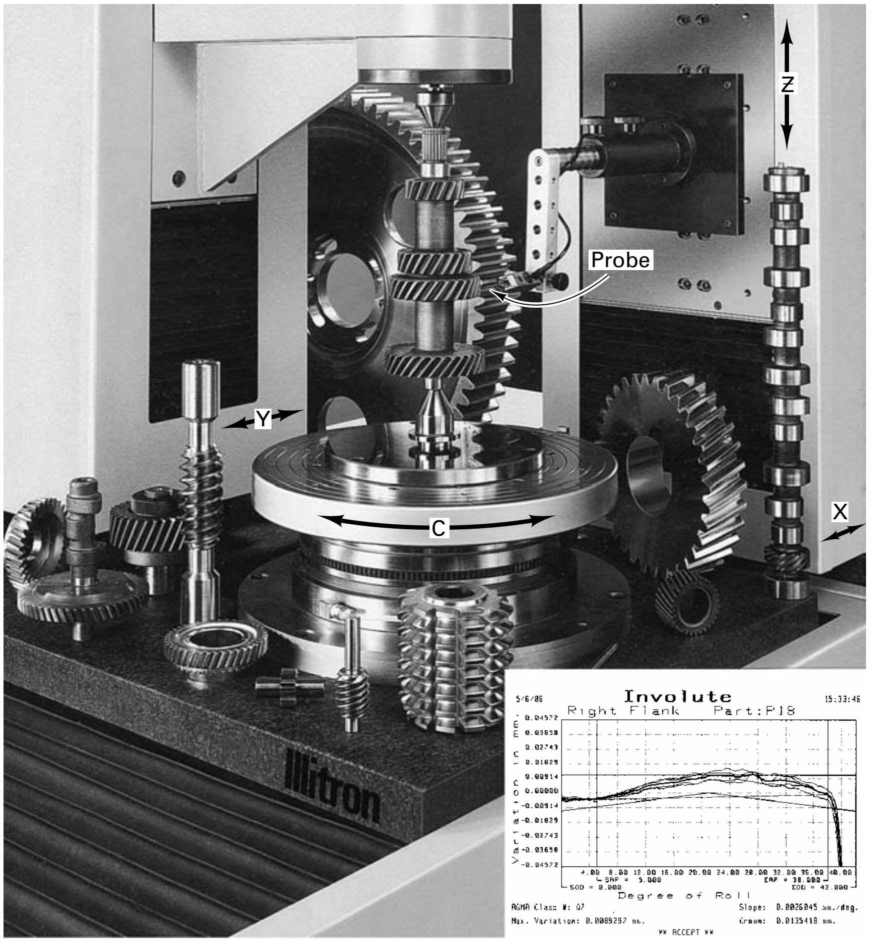

FIGURE 29-28 A CNC gear inspection machine has X, Y, Z motions plus a rotary table.

tooth spacing, and variations in pressure angle. The gear is usually mounted between centers. The probe is moved to the gear through X, Y, and Z translations. The gear is rotated between measurements. The inset in Figure 29-28 shows a typical display for an involute profile.

Because noise level is important in many applications, not only from the viewpoint of noise pollution but also as an indicator of probable gear life, special equipment for noise measurement is quite widely used, sometimes integrated into mass-production assembly lines.

■ Key Words

addendum
bevel gear
blanking
bottoming tap
broaching
circular pitch
cold-roll forming
collapsible tap
crown gear
dedendum
diametral pitch
fluteless tap
form milling
gear finishing
gear grinding
gear hobbing
gear rolling
gear shaping
gear teeth
herringbone gear
hob
hobbing
involute curve
pitch
pitch circle
pitch diameter
planetary gear
plug tap
self-opening die head
spur gear
taper tap
thread cutting
thread rolling
thread tapping
worm gear

■ Review Questions

1. How does the pitch diameter differ from the major diameter for a standard screw thread?
2. For what types of threads are the pitch and the lead the same?
3. What is the helix angle of a screw thread?
4. Why are pipe threads tapered?
5. What are three basic methods by which external threads are produced?
6. Explain the meaning of $^{1}/_{4}{}''$ -20 UNC-3A.
7. What is meant by the designation M20 x 2.5 6g6g? (What does the “x” mean?)
8. What are two reasons fine-series threads are being used less now than in former years?
9. In cutting a thread on a lathe, how is the pitch controlled?
10. What is the function of a threading dial on a lathe?
11. In Chapter 22, what figure(s) showed a threading dial?
12. What controls the lead of a thread when it is cut by a threading die?
13. What is the basic purpose of a self-opening die head?
14. What is the reason for using a taper tap before a plug tap in tapping a hole?
15. What difficulties are encountered if full threads are specified to the bottom of the dead-end hole?
16. Can a fluteless tap be used for threading a hole in gray cast iron? Why or why not?
17. What provisions should a designer make so that a dead-end hole can be threaded?
18. What is the major advantage of a spiral-point tap?
19. Can a fluteless tap be used for threading to the bottom of a dead-end hole? Why or why not?
20. Is it desirable for a tapping fluid to have lubricating qualities? Why?
21. How does thread milling differ from thread turning?
22. What are the advantages of making threads by grinding?
23. Why has thread rolling become the most commonly used method for making threads?
24. How can you determine whether a thread has been produced by rolling rather than by cutting?
25. Why is the involute form used for gear teeth?
26. What is the diametral pitch of a gear?
27. What is the relationship between the diametral pitch and the module of a gear?
28. On a sketch of a gear, indicate the pitch circle, addendum circle, dedendum circle, and circular pitch.
29. What five requirements must be met for gears to operate satisfactorily? Which of these are determined by the manufacturing process?
30. What are the advantages of helical gears compared with spur gears?
31. What is the principal disadvantage of helical gears?
32. What difficulty would be encountered in hobbing a herringbone gear?
33. What is the only type of machine on which full-herringbone gears can be cut?
34. What modification in design is made to herringbone gears to permit them to be cut by hobbing?
35. Why aren’t more gears made by broaching?
36. What is the most important property of a crown gear?
37. What are three basic processes for machining gears?
38. Which basic gear-machining process is utilized in a Fellows gear shaper?
39. When a helical gear is machined on a milling machine, the table lead screw and the universal dividing head have to be connected by a gear train. Why?
40. Why is a gear-hobbing machine much more productive than a gear shaper?
41. In gear shaping and gear hobbing, the tooth profiles are generated. What does that mean?
42. What are the advantages of cold-roll forming for making gears?

43. Why is cold-roll forming not suitable for making gray cast iron gears?
44. Under what conditions can shaving not be used for finishing gears?
45. What inherent property accrues from cold-roll forming of gears that may result in improved gear life?
46. Can lapping be used to finish cast iron gears?
47. What factors are usually checked in inspecting gears?
48. What are the basic methods for gear finishing?

Problems

1. Calculate the cutting time needed to tap a $^3/_4$-in.-diameter by 2-in.-deep hole using a cutting speed of 30 sfpm. The tap has 10 tpi.
2. The new manufacturing manager has recommended to you that chipless tapping be adopted for tapping holes in the deep, dead-end holes on the 2-cylinder engine blocks that the company makes. Chipless tapping can run at twice the speed of the conventional tapping process, works well on deep holes, and provides better quality and finish with longer tool life. The tapping process is the bottleneck process in machining all the cast iron engine blocks. In addition, 10% of the blocks have to be scrapped due to broken taps. What do you recommend?
3. A hob that has a pitch diameter of 76.2 mm is used to cut a gear having six teeth. If a cutting speed of 27.4 m/min is used, what will be the rpm value of the gear blank?
4. In Figure 29-19 a form-milling operation and cutters are shown. The gear is to be made from 4340 steel, R_c 50 prior to heat treat and final grind. Select the proper speeds and feeds for the job (the cutter is 4 in. in diameter) and compute the cutting time to mill this gear. Would you use up milling versus down milling?
5. A gear-broaching machine of the type shown in Figure 29-20 can do the gear in 15 seconds (about 240 parts per hour). How many additional gears per year are needed to cover the broaching tooling cost if each broach on the machine cost \$250? Do you think the broach tool life is sufficient to handle that number of parts? What about TiN coating the broaches (cost \$10.00 per broach)?
6. Assume that 10,000 spur gears, $1^1/_8$ in. in diameter and 1 in. thick, are to be made of 70-30 brass. What manufacturing method would you consider?
7. If only three gears described in problem 6 were to be made, what process would you select?
8. K.C. Stern, a design engineer for Boeing Commercial Airplane Group, is doing some design work and has a question regarding the hole size that is drilled before tapping internal threads. The book states, “A hole diameter slightly larger than the minor diameter of the thread must already exist, made by drilling/reaming, boring, or die casting.”

   Conventional wisdom would lead one to believe that a hole slightly smaller should exist before tapping threads. The *Machinery’s Handbook* seems to agree with this. Most tap drill sizes listed are smaller than the minimum minor diameter listed for a particular thread size in MIL-S-008879B. K.C. has found at least one exception to this, but the difference was only a couple of thousandths of an inch.

   K.C. consulted local sources on this matter, but no one would commit to the correctness or incorrectness of the book. A number of people are scratching their heads on this one. Your assistance in this matter is greatly appreciated. Should the hole be slightly smaller or slightly larger than the minor diameter of the thread and why?

www.wiley.com/college/degarmo

Chapter 29 CASE STUDY

Bevel Gear for a Riding Lawn Mower

Figure CS 29 is a bevel gear for the transaxle of a heavy duty riding lawn mower. The gear has an outer diameter of 3.50 inches and a maximum thickness of 1/2 inch. At the root of the teeth, the thickness is approximately 3/16 inch. The minimum material properties have been estimated to be a yield strength of 125 ksi and a surface hardness of Rockwell C 25. The maximum operating temperature should be less than 250°F.

Since the mower has a multi speed transmission, the transaxle gearing may be subject to sudden applications of load due to improper engagement of the clutch. The manufacturer has proposed a nonstandard test in which a 10 pound weight is dropped onto the gear from a height of 15 inches. While this does not translate to a Charpy test value, it is clear that impact resistance will be an important property.

The gear will operate in an oil-filled enclosure so corrosion resistance need not be outstanding. A smooth surface finish is desirable (especially on the teeth), and the total production run has been placed between 25,000 and 50,000 units.

1. Based on the size and shape of the product, describe at least three reasonable ways in which the component could be produced. For each method, briefly discuss its relative pros and cons.
2. What type of engineering materials might be able to meet the desired requirements? What would be the pros and cons of each general family?
3. For each of the shape generation methods in part 1, select an appropriate material from the alternatives discussed in part 2. (Note: Casting alloys should be matched for the casting processes, high machinability alloys would be favored for cutting applications, etc.).
4. Which of the above alternatives do you feel would be the "best" solution to the problem? Why? For this system, outline the specific steps that would be necessary to produce the part from reasonable starting material. Include any necessary heat treatments and/or surface treatments.
5. Your supervisor has asked you to evaluate the possibility of producing this part as a near net shape ferrous forging, with forged gear teeth. Investigate this process and determine if it would be a feasible approach. If so, would you recommend that the forging be performed cold, warm, or hot? Would subsequent heat treatment or surface treatment be required? What concerns might be associated with these processes?

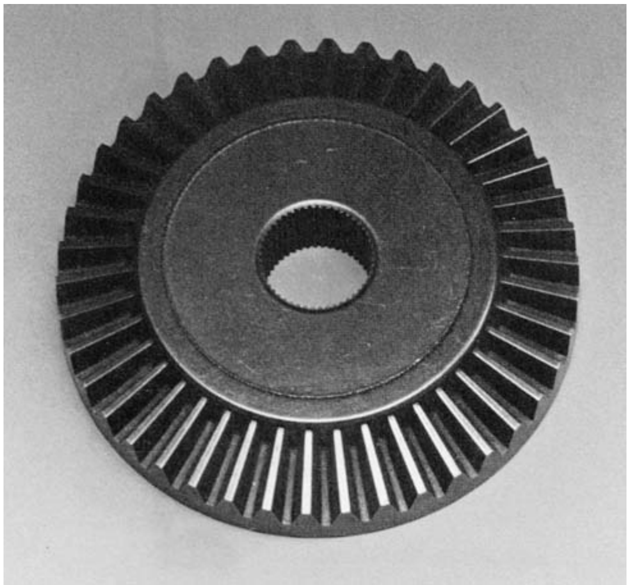

Figure CS 29

CHAPTER 30

FUNDAMENTALS OF JOINING

30.1 INTRODUCTION TO CONSOLIDATION PROCESSES

Large-size products, products with a high degree of shape complexity, or products with a wide variation in required properties are often manufactured as joined assemblies of two or more component pieces. These pieces may be smaller and therefore easier to handle, simpler shapes that are easier to manufacture, or segments that have been made from different materials. Assembly is an important part of the manufacturing process, and a wide variety of *consolidation processes* have been developed to meet the various needs.

Each of the methods has its own distinctive characteristics, strengths, and weaknesses. The metallurgical processes of welding, brazing, and soldering are usually used to join metals and often involve the solidification of molten material. The use of discrete fasteners (such as nuts, bolts, screws, and rivets) requires the creation of aligned holes and produces stress localization. While the holes may affect performance, disassembly and reassembly can often be performed with relative ease. Adhesive bonding has grown with new developments in polymeric materials and is being used extensively in automotive and aircraft production. Any material can be joined to any other material, and low-temperature joining is particularly attractive for composite materials. Production rates are often low, however, because of the time required for the adhesive to develop full strength. Lesser known joining techniques include shrink fits, slots and tabs, and a wide variety of other mechanical methods. From a technical viewpoint, powder metallurgy is another consolidation process, since the end product is built up by the joining of a multitude of individual particles.

Our survey of consolidation processes will begin with a spectrum of techniques known by the generic term of *welding*. Welding is the permanent joining of two materials, usually metals, by *coalescence*, which is induced by a combination of temperature, pressure, and metallurgical conditions. The particular combination of these variables can range from high temperature with no pressure to high pressure with no increase in temperature. Because welding can be accomplished under a wide variety of conditions, a number of different processes have been developed. Welding is the dominant method of joining in manufacturing, and a large fraction of metal products would have to be drastically modified if welding were not available.

Coalescence between two metals requires sufficient proximity and activity between the atoms of the pieces being joined to cause the formation of common crystals. The ideal metallurgical bond, for which there would be no noticeable or detectable interface, would require (1) perfectly smooth, flat, or matching surfaces; (2) surfaces that are clean and free from oxides, absorbed gases, grease, and other contaminants; (3) metals with no internal impurities; and (4) the joining of single crystals with identical crystallographic structure and orientation. These conditions would be difficult to obtain under laboratory conditions and are virtually impossible to achieve in normal production. Consequently, the various joining methods have been designed to overcome or compensate for the common deficiencies.

Surface roughness can be overcome either by force, causing plastic deformation and flattening of the high points, or by melting the two surfaces so that fusion occurs. The various processes also employ different approaches to cleaning the metal surfaces prior to welding and preventing further oxidation or contamination during the joining process. In solid-state welding, contaminated layers are generally removed by mechanical or chemical cleaning prior to welding or by causing sufficient metal flow along the interface so that new surface is created and existing impurities are displaced from the joint. In *fusion welding*, where molten material is produced and high temperatures accelerate the reactions between the metal and its surroundings, contaminants are often removed from the pool of molten metal through the use of fluxing agents. If welding is performed in a vacuum, the contaminants are removed much more easily, and coalescence is easier to achieve. In the vacuum of outer space, mating parts may weld under extremely light loads, even when welding is not intended.

When the process requires heat that is sufficient to induce melting, the structure of the metal may be significantly altered. Even when no melting occurs, the heating and cooling of the welding process can affect the metallurgical structure and quality of both the weld and the adjacent material. Since many of the changes are detrimental, the possible consequences of heating and cooling should be a major consideration when selecting a joining process.

To produce a high-quality weld, we will need (1) a source of satisfactory heat and/or pressure, (2) a means of protecting or cleaning the metals to be joined, and (3) caution to avoid, or compensate for, harmful metallurgical effects. These aspects will be developed in the sections that follow.

30.2 CLASSIFICATION OF WELDING AND THERMAL CUTTING PROCESSES

Wherever possible, this text will utilize the nomenclature of the American Welding Society (AWS). The various welding processes have been classified in the manner presented in Figure 30-1, and letter symbols have been assigned to facilitate process designation. The variety of processes provide multiple ways of achieving coalescence and make it possible to produce effective and economical welds in nearly all metals and combinations of metals. Chapter 31 will present the gas and arc welding processes; Chapter 32 will cover resistance and solid-state welding; and Chapter 33 will present a variety of other processes, including brazing and soldering.

For many years, welding equipment (such as oxyfuel torches and electric arc units) has also been used to cut metal sheets and plates. Developed originally for salvage and repair work, then used for preparing plates for welding, this type of equipment is now widely used to cut sheets and plates into desired shapes for a variety of uses and operations. Laser- and electron-beam equipment can now cut both metals and nonmetals at speeds up to 25 m/min (1000 in./min), with accuracies of up to 0.25 mm (0.01 in.). Figure 30-2 summarizes the commonly used *thermal cutting* processes and provides their AWS designations. Since cutting is often an adaptation of welding, the welding and cutting capabilities will be presented together as the individual processes are discussed.

30.3 SOME COMMON CONCERNS

Many of the problems that are inherent to welding and joining can be avoided by selecting the proper process and considering both general and process-specific characteristics and requirements. Proper design of the joint is extremely critical. Heating, melting, and resolidification can produce drastic changes in the properties of base and

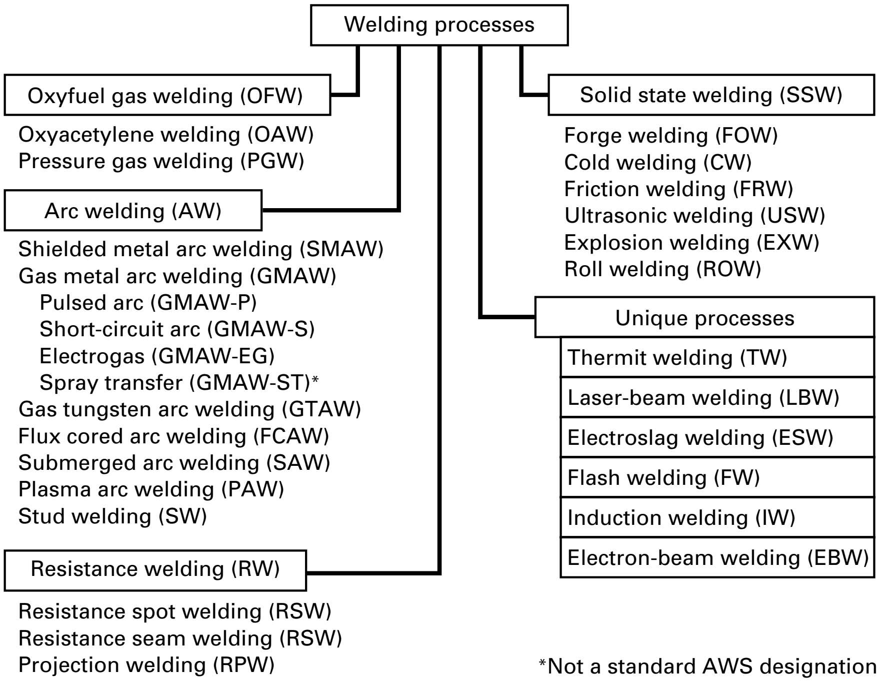

FIGURE 30-1 Classification of common welding processes along with their AWS (American Welding Society) designations.

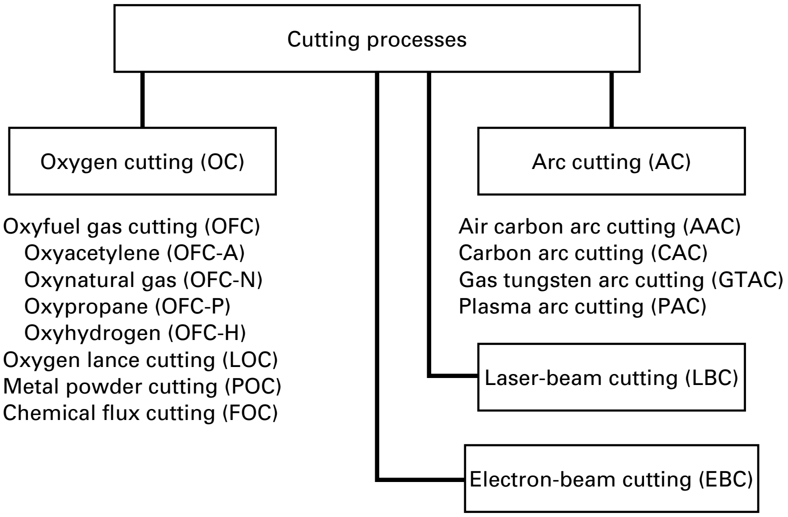

FIGURE 30-2 Classification of thermal cutting processes along with their AWS (American Welding Society) designations.

filler materials. Weld metal properties can also be changed by dilution of the filler by melted base metal, vaporization of various alloy elements, and gas–metal reactions.

Various types of weld defects can also be produced. These include cracks in various forms, cavities (both gas and shrinkage), inclusions (slag, flux, and oxides), *incomplete fusion* between the weld and base metals, *incomplete penetration* (insufficient weld depth), unacceptable weld shape or contour, arc strikes, spatter, undesirable metallurgical changes (aging, grain growth, or transformations), and excessive distortion. Figure 30-3 depicts several of these defects.

■ 30.4 TYPES OF FUSION WELDS AND TYPES OF JOINTS

Figure 30-4 illustrates four basic types of fusion welds. *Bead welds*, or surfacing welds, are made directly onto a flat surface and therefore require no edge preparation. Since the penetration depth is limited, bead welds are used primarily for joining thin sheets of metal, building up surfaces, and depositing hard-facing (wear-resistant) materials.

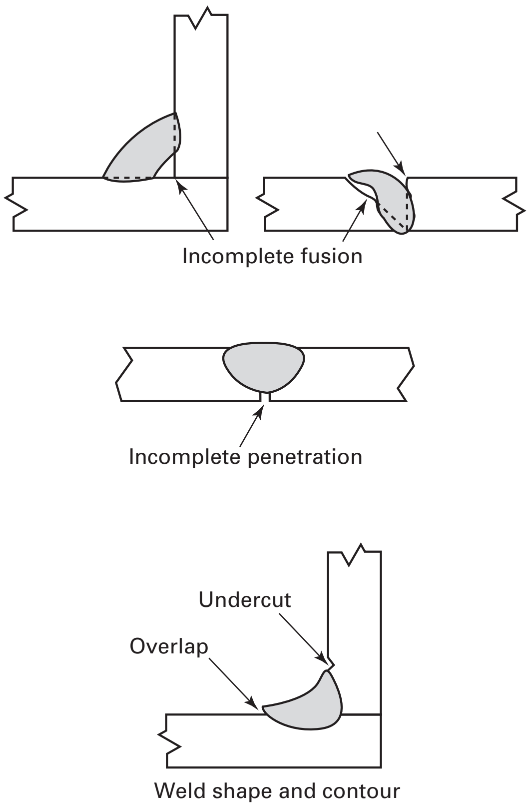

FIGURE 30-3 Some common welding defects.

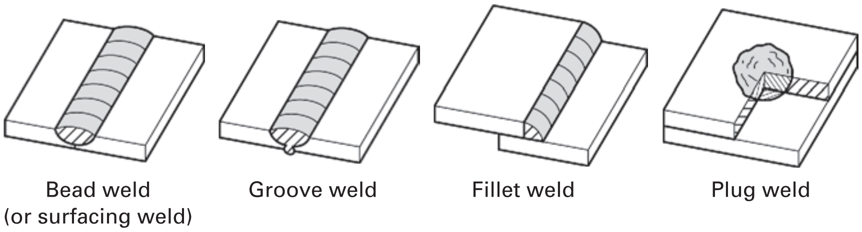

FIGURE 30-4 Four basic types of fusion welds.

Groove welds are used when full-thickness strength is desired on thicker material. Some sort of edge preparation is required to form a groove between the abutting edges. V, double-V (top and bottom), U, and J (one-sided V) configurations are most common and are often produced by oxyacetylene flame cutting. The specific type of groove usually depends upon the thickness of the joint, the welding process to be employed, and the position of the work. The objective is to obtain a sound weld throughout the full thickness with a minimum amount of additional weld metal. If possible, single-pass welding is preferred, but multiple passes may be required, depending upon the thickness of the material and the welding process being used. As shown in Figure 30-5, special consumable *inserts* can be used to ensure proper spacing between the mating edges and good quality in the root pass. These inserts are particularly useful in pipeline welding and other applications where welding must be performed from only one side of the work.

Fillet welds are used for tee, lap, and corner joints and require no special edge preparation. The size of the fillet is measured by the leg of the largest 45° right triangle that can be inscribed within the contour of the weld cross section. This is shown in

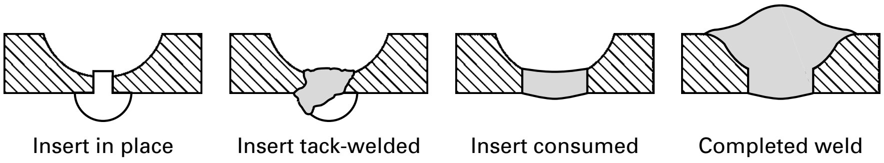

FIGURE 30-5 The use of a consumable backup insert in making a fusion weld. *(Courtesy Arcos Industries, Mount Carmel, PA).*

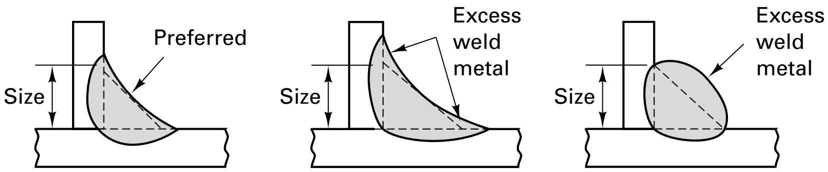

FIGURE 30-6 Preferred shape and the method of measuring the size of fillet welds.

Figure 30-6, which also depicts the proper shape for fillet welds to avoid excess metal deposition and reduce stress concentration.

Plug welds attach one part on top of another and are often used to replace rivets or bolts. A hole is made in the top plate and welding is started at the bottom of this hole.

Figure 30-7 shows five basic types of joints (*joint configurations*) that can be made with the use of bead, groove, and fillet welds, and Figure 30-8 shows some of the methods to construct these joints. In selecting the type of joint to be used, a primary consideration should be the type of loading that will be applied. A large portion of what are erroneously called "welding failures" can more accurately be attributed to inadequate consideration of loading. Cost and accessibility for welding are other important factors when specifying joint design but should be viewed as secondary to loading. Cost is affected by the amount of required edge preparation, the amount of weld metal that must be deposited, the type of equipment that must be used, and the speed and ease with which the welding can be accomplished.

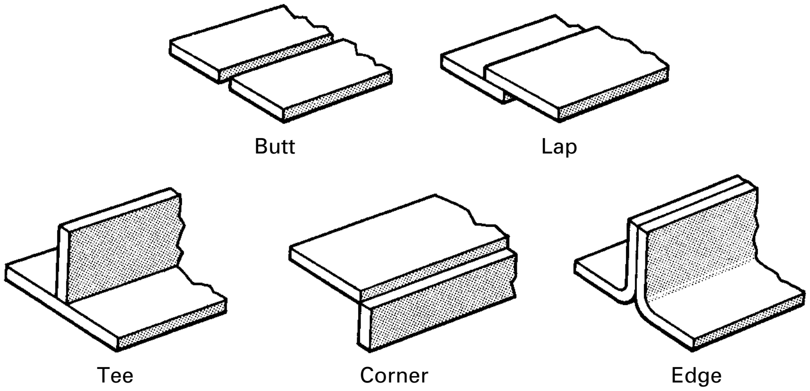

FIGURE 30-7 Five basic joint designs for fusion welding.

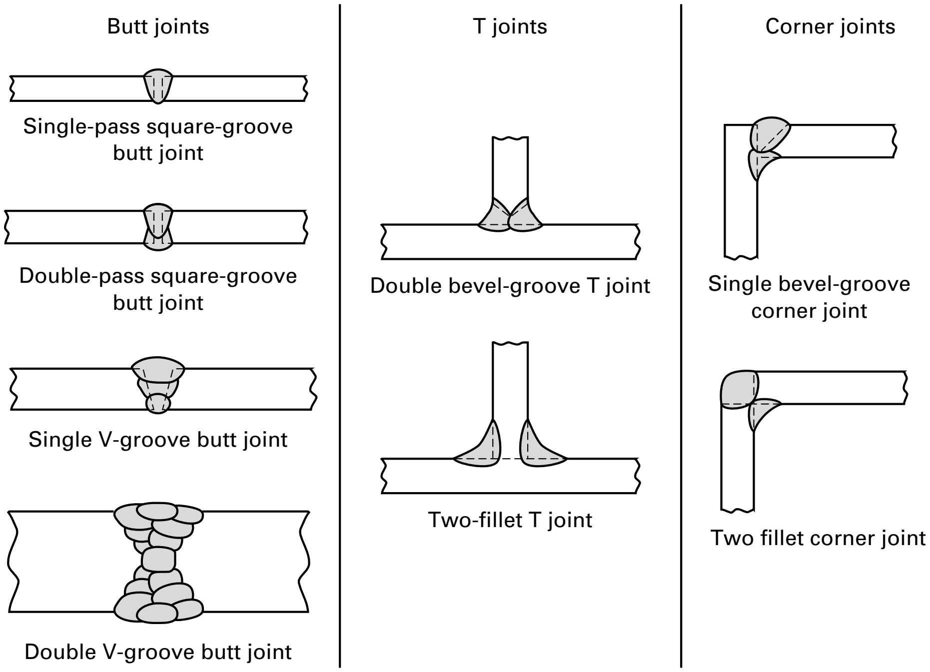

FIGURE 30-8 Various weld procedures used to produce welded joints. *(Courtesy Republic Steel Corporation, Youngstown, OH).*

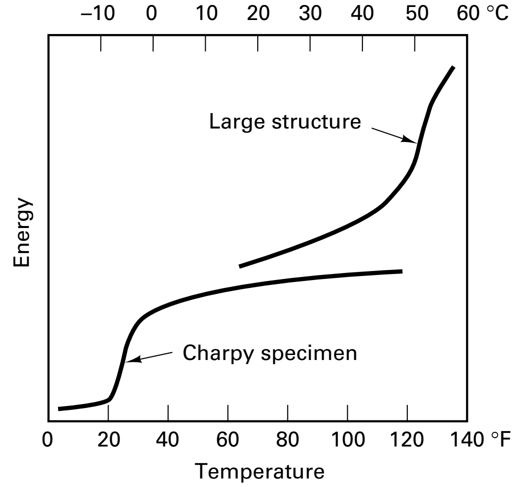

FIGURE 30-9 Effect of size on the transition temperature and energy-absorbing ability of a certain steel. While the larger structure absorbs more energy because of its size, it becomes brittle at a much higher temperature.

30.5 DESIGN CONSIDERATIONS

Welding is a unique process that cannot be directly substituted for other methods of joining without proper consideration of its particular characteristics and requirements. Unfortunately, welding is also easy and convenient, and the considerations of proper design and implementation are often overlooked.

One very important fact is that welding produces *monolithic*, or one-piece, structures. When two pieces are welded together, they become one continuous piece. This can cause significant complications. For example, a crack in one piece of a multipiece structure may not be catastrophic, because it will seldom progress beyond the single piece in which it occurs. However, when a large structure, such as a ship hull, pipeline, storage tank, or pressure vessel, consists of many pieces welded together, a crack that starts in a single plate or weld can propagate for a great distance and cause complete failure. Obviously, this kind of failure is not the fault of the welding process itself but is simply a reflection of the monolithic nature of the product.

It is also important to note that a given material in small pieces may not behave as it does in a larger size. This feature is clearly illustrated in Figure 30-9, which shows the relationship between the energy required to fracture and temperature for the same steel tested as a small Charpy impact specimen (see Chapter 2 and Figure 2-20) and as a large, welded structure. In the form of a small Charpy bar, the material exhibits ductile behavior and good energy absorption at temperatures down to 25°F (4°C). When welded into a large structure, however, brittle behavior is observed at temperatures as high as 110°F (43°C). More than one welded structure has failed because the designer overlooked the effect of size on the notch-ductility of metal.

Another common error is to make welded structures too rigid, thereby restricting their ability to redistribute high stresses and avoid failure. Considerable thought may be required to design structures and joints that provide sufficient flexibility, but the multitude of successful welded structures attests to the fact that such designs are indeed possible.

Accessibility, welding position, component match-up, and the specific nature of a joint are other important considerations in welding design.

30.6 HEAT EFFECTS

WELDING METALLURGY

Heating and cooling are essential and integral components of almost all welding processes and tend to produce metallurgical changes that are often undesirable. In *fusion welding*, the heat is sufficient to melt some of the *base metal*, and this is often followed by a rapid cooling. Thermal effects tend to be most pronounced for this type of welding, but they also exist to a lesser degree in processes where the heating–cooling cycle is less severe. If the thermal effects are properly considered, adverse results can usually be avoided or

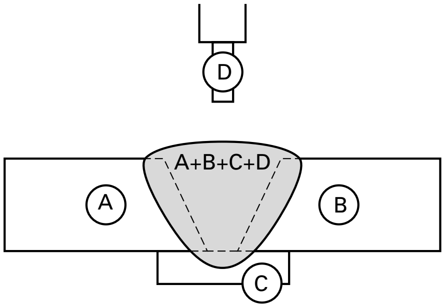

FIGURE 30-10 Schematic of a butt weld between a plate of metal A and a plate of metal B, with a backing plate of metal C and filler of metal D. The resulting weld nugget becomes a complex alloy of all four metals.

minimized, and excellent service performance can be obtained. If they are overlooked, however, the results can be disastrous.

Because such a wide range of metals are welded and a variety of processes are used, welding metallurgy is an extensive subject, and the material presented here serves only as an introduction. In fusion welding, a pool of molten metal is created, with the molten metal coming from either the parent plate alone (*autogenous welding*) or a mixture of parent and filler material. Figure 30-10 shows a butt weld between plates of material A and material B. A backing strip of material C is used with filler metal of material D. In this situation, the molten pool is actually a complex alloy of all four materials. The molten material is held in place by a metal "mold" formed by the surrounding solids. Since the molten pool is usually small compared to the surrounding metal, fusion welding can often be viewed as *a small metal casting in a large metal mold*. The resultant structure and its properties can be best understood by first analyzing the casting and then considering the effects of the associated heat on the adjacent base material.

Figure 30-11 shows a typical microstructure produced by a fusion weld. In the center of the weld is a region composed of metal that has solidified from the molten state. The material in this *weld pool*, or *fusion zone*, is actually a mixture of parent metal and electrode or filler metal, with the ratio depending upon the particular process, the type of joint, and the edge preparation. Figure 30-12 compares two butt-weld designs, where the weld pool in the upper design would contain a large percentage of base metal and the weld pool in the lower design would be largely filler material. The metal in the fusion zone is cast material with a microstructure reflecting the cooling rate of the weld. This region cannot be expected to have the same properties and characteristics as the wrought material being welded, since their processing histories and resulting structures

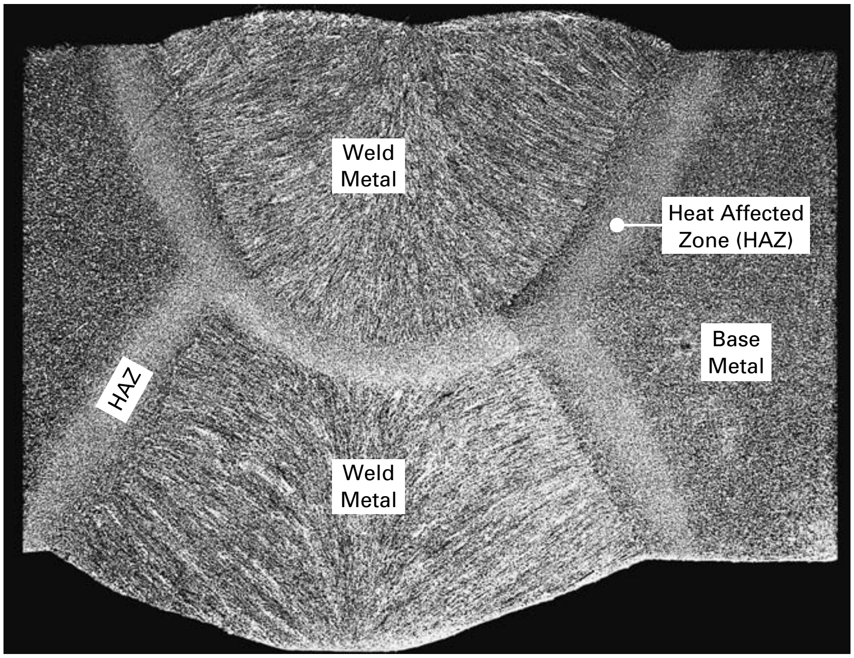

FIGURE 30-11 Grain structure and various zones in a fusion weld.

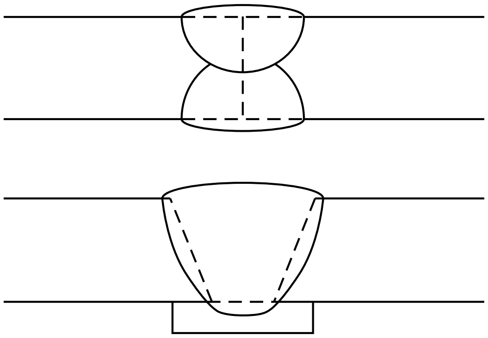

FIGURE 30-12 Comparison of two butt-weld designs. In the top weld, a large percentage of the weld pool is base metal. In the bottom weld, most of the weld pool is filler metal.

are usually different. Adequate mechanical properties, therefore, can only be achieved by selecting filler rods or electrodes, which have properties *in their as-deposited condition* that equal or exceed those of the wrought parent metal. It is not uncommon, therefore, for the filler metal to have a different chemistry from the metal being welded. The grain structure in the fusion zone may be fine or coarse, equiaxed or dendritic, depending upon the type and volume of weld metal and the rate of cooling, but most electrode and filler rod compositions tend to produce fine, equiaxed grains. The matching or exceeding of base metal strength, in the as-solidified condition, is the basis for several AWS specifications for electrodes and filler rods.

The pool of molten metal created by fusion welding is prone to all of the problems and defects associated with metal casting, such as gas porosity, inclusions, blowholes, cracks, and shrinkage. Since the amount of molten metal is usually small compared to the total mass of the workpiece, rapid solidification and rapid cooling of the solidified metal are quite common. Associated with these conditions may be the entrapment of dissolved gases, chemical segregation, grain size variation, grain shape problems, and orientation effects.

Adjacent to the fusion zone, and wholly within the base material, is the ever-present and generally undesirable *heat-affected zone (HAZ)*. In this region, the parent metal has not melted but has been subjected to elevated temperatures for a brief period of time. Since the temperature and its duration vary widely with location, fusion welding might be more appropriately described as "a metal casting in a metal mold, coupled with an abnormal and widely varying heat treatment." The adjacent metal may experience sufficient heat to bring about structure and property changes, such as phase transformations, recrystallization, grain growth, precipitation or precipitate coarsening, embrittlement, or even cracking. The variation in thermal history can produce a variety of microstructures and a range of properties. In steels, the structures can range from hard, brittle martensite all the way through coarse pearlite and ferrite.

Because of its altered structure, the heat-affected zone may no longer possess the desirable properties of the parent material, and since it was not melted, it cannot assume the properties of the solidified weld metal. Consequently, this is often the weakest area in the as-welded joint. Except where there are obvious defects in the weld deposit, most welding failures originate in the heat-affected zone. This region extends outward from the weld to the location where the base metal has experienced too little heat to be affected or altered by the welding process. Figure 30-13 presents a schematic of a fusion weld in steel, using standard terminology for the various regions and interfaces. Part of the heat-affected zone has been heated above the A_1 transformation temperature and could assume a totally new structure through phase transformation. The lower-temperature portion of the heat-affected zone (peak temperatures below the A_1 value) can experience diffusion-induced changes within the original structure.

Because of the melting, solidification, and exposure to a range of high temperatures, the structure and properties of welds can be extremely complex and varied. Through proper concern, however, associated problems can often be reduced or totally eliminated. Consideration should first be given to the thermal characteristics of the various processes. Table 30-1 classifies some of the more common welding processes with regard to their *rate of heat input*. Processes with low rates of heat input (slow heating) tend to produce large total heat content within the metal, slow cooling rates, large heat-affected zones, and

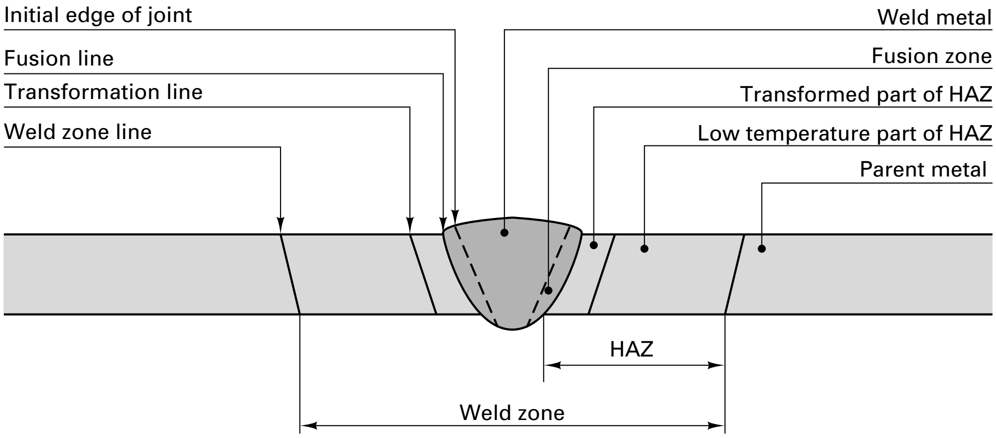

FIGURE 30-13 Schematic of a fusion weld in steel, presenting proper terminology for the various regions and interfaces. Part of the heat-affected zone has been heated above the transformation temperature and will form a new structure upon cooling. The remaining segment of the heat-affected zone experiences heat alteration of the initial structure. *(Courtesy Sandvik AB, Sandviken, Sweden)*

TABLE 30-1 Classification of Common Welding Processes by Rate of Heat Input

Low Rate of Heat Input	High Rate of Heat Input
Oxyfuel welding (OFW)	Plasma arc welding (PAW)
Electroslag welding (ESW)	Electron-beam welding (EBW)
Flash welding (FW)	Laser welding (LBW)
	Spot and seam resistance welding (RW)
	Percussion welding
Moderate Rate of Heat Input	
Shielded metal arc welding (SMAW)	
Flux cored arc welding (FCAW)	
Gas metal arc welding (GMAW)	
Submerged arc welding (SAW)	
Gas tungsten arc welding (GTAW)	

resultant structures with lower strength and hardness, but higher ductility. High-heat-input processes, on the other hand, have low total heats, fast cooling rates, and small heat-affected zones. The size of the heat-affected zone will also increase with increased starting temperature, decreased welding speed, increased thermal conductivity of the base metal, and a decrease in base metal thickness. Weld geometry is also important, with fillet welds producing smaller heat-affected zones than butt welds.

If the as-welded properties are unacceptable, the entire welded assembly might be heat treated after welding. Structure variations can be reduced or eliminated, but the results are restricted to those that can be produced through heat treatment. The structures and properties associated with cold working, for example, could not be achieved. In addition, problems may be encountered in trying to achieve controlled heating and cooling (heat treatment) within the large, complex-shaped structures commonly produced by welding. Moreover, furnaces, quench tanks, and related equipment may not be available to handle the full size of welded assemblies.

An alternative technique to reduce microstructural variation, or the sharpness of that variation, is to *preheat* either the entire base metal or material at least 10 centimeters (4 inches) on either side of the joint just prior to welding. This heating serves to reduce the cooling rate of both the weld deposit and the immediately adjacent metal in the heat-affected zone. The slower cooling produces a softer, more ductile structure and provides more time for the out-diffusion of harmful dissolved hydrogen. The welding stresses are distributed over a larger area, reducing the amount of weld distortion and the possibility of cracking. Preheating is more common with alloy steels and thicker sections, and it is particularly important with the high-thermal-conductivity metals, such as copper and aluminum, where the cooling rate would otherwise be extremely rapid.

If the carbon content of plain carbon steels is greater than about 0.3%, the cooling rates encountered in normal welding may be sufficient to produce hard, untempered martensite, with an accompanying loss of ductility. Since alloy steels possess higher hardenability, the likelihood of martensite formation will be even greater with these materials. Special pre- and postwelding heat cycles (*preheat* and *postheat*) may be required when welding the higher-carbon and alloy steels. For plain-carbon steels, a preheat temperature of 200° to 400°F (100° to 200°C) is usually adequate. Because they can be welded without the need for preheating or postheating, low-carbon, low-alloy steels are extremely attractive for welding applications.

In joining processes where little or no melting occurs, considerable pressure is often applied to the heated metal (as in forge or resistance welding). The weld region experiences deformation, and the resultant structure exhibits the characteristics of a wrought material.

Since steel is the primary metal that is welded, our discussion of metallurgical effects has largely focused on steel. It should be noted, however, that other metals also exhibit heat-related changes in their structure and properties. The exact effects of the heating and cooling associated with welding will depend upon the specific transformations and structural changes that can occur within the materials being joined.

THERMAL EFFECTS IN BRAZING AND SOLDERING

In brazing and soldering, there is no melting of the base metal, but the joint still contains a region of solidified liquid and heat-affected sections within the base material. For these processes, however, another thermal effect may become quite significant. The base and filler metals are usually of radically different chemistries, and the elevated temperatures of joining also promote interdiffusion. Intermetallic phases can form at the interface and alter the properties of the joint. If present in small amounts, they can enhance bonding and provide strength reinforcement. Most *intermetallic compounds*, however, are quite brittle. Too much intermetallic material can result in significant loss of both strength and ductility.

THERMAL-INDUCED RESIDUAL STRESSES

Another effect of heating and cooling is the introduction of *residual stresses*. In welding, these may be of two types and are most pronounced in fusion welding, where the greatest amount of heating occurs. Their effects can be observed in the form of dimensional changes, distortion, and cracking.

Residual welding stresses are the result of restraint to thermal expansion and contraction by the pieces being welded. Consider a rectangular bar of metal that is uniformly heated and cooled. When heated, the material expands and becomes larger in length, width, and thickness. Upon cooling, the material contracts, and each dimension returns to its original value. Now clamp the ends of the bar in a vise so that lengthwise expansion cannot take place and repeat the thermal cycle. Upon heating, all of the expansion is restricted to the width and thickness, but the contraction upon cooling will still occur uniformly. The resulting rectangle will be shorter, thicker, and wider than the original specimen.

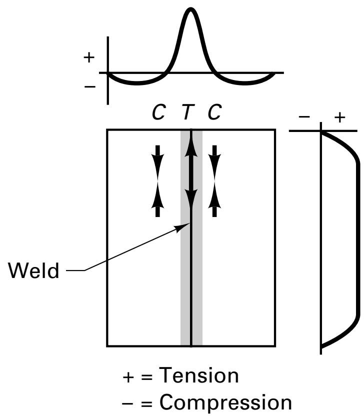

FIGURE 30-14 Schematic of the longitudinal residual stresses in a fusion-welded butt joint.

Now apply these principles to a weld being made between two plates, like that illustrated in Figure 30-14. As the weld is produced, the liquid region conforms to the shape of the "mold," and the adjacent material becomes hot and expands. The molten pool can absorb expansion of the plate perpendicular to the weld line, but expansion along the length of the weld tends to be restrained by the adjacent plate material that is cooler and stronger. This resistance or restraint is often sufficient to induce deformation of the hot, weak, and thermally expanding heat-affected zone, which now becomes thicker instead of longer.

After the weld pool solidifies, both the weld metal and adjacent heat-affected region cool and contract. The surrounding metal now resists this contraction. The weld region wants to contract but is restrained and forced to remain in a "stretched" condition, known as residual tension (region *T*). The cooling weld, in turn, exerts forces that try to squeeze the adjacent material, producing regions of residual compression (regions *C*). While the

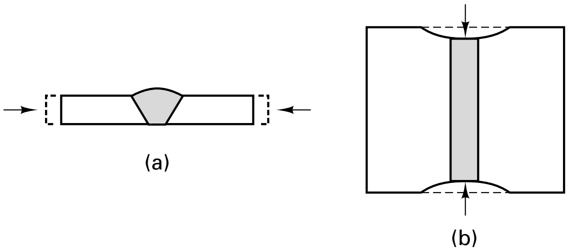

FIGURE 30-15 Shrinkage of a typical butt weld in the transverse (a) and longitudinal (b) directions as the material responds to the induced stresses. Note that restricting transverse motion will place the entire weld in transverse tension.

net force must remain at zero (in keeping with the equilibrium laws of physics and mechanics), the localized tensions and compressions can be substantial. As Figure 30-14 depicts, a high residual tension is observed in the weld metal, which becomes compressive and then returns to zero as one moves away from the weld centerline. The magnitude of the residual tension will be relatively uniform along the weld line, except at the ends, where the stresses can be relieved by a pulling in of the edges.

During cooling, the thermal contractions occur both parallel (longitudinal) and perpendicular (transverse) to the weld line. Lateral movement of the material being welded can often compensate for the transverse contractions. The width of the welded assembly simply becomes less than that of the positioned components at the time of welding. Figure 30-15a depicts this reduction in width, while Figure 30-15b illustrates the longitudinal contractions that generate the complex stresses of Figure 30-14.

Components being joined during fabrication typically have considerable freedom of movement, but welds made on nearly completed structures or repair welds often join components that are somewhat restrained. If the welded plates in Figure 30-15a are restrained from horizontal movement, *additional stresses will be induced*. These residual stresses are known as *reaction stresses*, and they can cause cracking of the hot weld or heat-affected material, or contribute to failure during subsequent use. Their magnitude will be an inverse function of the length between the weld joint and the point of restraint, and can be as high as the yield strength of the parent metal (since yielding would occur to relieve any higher stresses).

EFFECTS OF THERMAL STRESSES

Distortion or warping of the assembly can easily result from the nonuniform temperatures and thermal stresses induced by welding. Figure 30-16 depicts some of the distortions that can occur during various welding configurations. Since the causing conditions

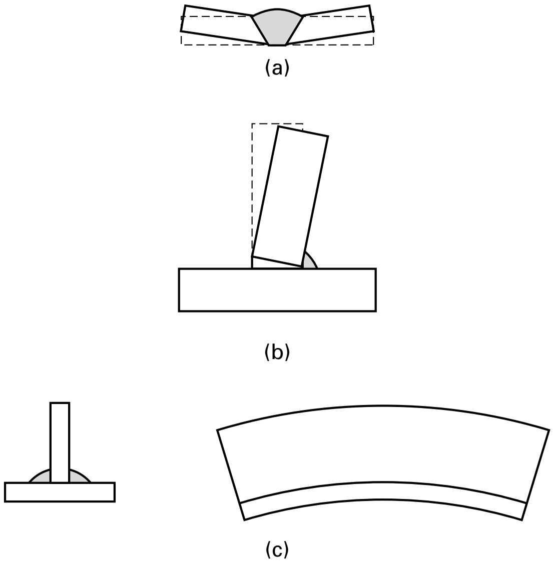

FIGURE 30-16 Distortions or warpage that may occur as a result of welding operations: (a) V-groove butt weld where the top of the joint contracts more than the bottom; (b) one-side fillet weld in a T-joint; (c) two-fillet weld in a T-joint with a high vertical web.

can vary widely, no fixed rules can be provided to assure the absence of warping. The following suggestions can help, however.

Total heat input to the weld should be minimized. Welds should be made with the least amount of weld metal necessary to form the joint. Overwelding is not an asset, since it actually increases residual stresses and distortion. Faster welding speeds reduce the welding time and also reduce the volume of metal that is heated. Welding sequences should be designed to use as few passes as possible, and the base material should be permitted to have a high freedom of movement. When constructing a multiweld assembly, it is beneficial to weld toward the point of greatest freedom, such as from the center to the edge.

The initial components can also be oriented out of position, so that the subsequent distortion will move them to the desired final shape. Another common procedure is to completely restrain the components during welding, thereby forcing some plastic flow in the joint and surrounding material. This procedure is used most effectively on small weldments where the reaction stresses will not be high enough to cause cracking.

Still another procedure is to balance the resulting thermal stresses by depositing the weld metal in a specified pattern, such as short lengths along a joint or on alternating sides of a plate. Warping can also be reduced by the use of *peening*. As the weld-bead surface is hammered with the peening tool or material, the metal is flattened and tries to spread. Being held back by the underlying material, the surface becomes compressed or squeezed. Surface rolling of the weld-bead area can have the same effect. In both processes, the compressive stresses induced by the surface deformation serve to offset the tensile stresses induced by welding.

Residual stresses should not have a harmful effect on the strength of weldments, except in the presence of notches or in very rigid structures where no plastic flow can occur. These two conditions should not exist if the welds have been properly designed and proper workmanship has been employed. Unfortunately, it is easy to inadvertently join heavy sections and produce rigid configurations that will not permit the small amounts of elastic or plastic movement required to reduce highly concentrated stresses. In addition, geometric notches, such as sharp interior corners, are often incorporated into welded structures. Other harmful "notches," such as gas pockets, rough beads, porosity, and arc "strikes," can serve as initiation sites for weld failures. These can generally be avoided by proper welding procedures, good workmanship, and adequate supervision and inspection.

The residual stresses of welding can also cause additional distortion when subsequent machining removes metal and upsets the stress equilibrium. For this reason, welded assemblies that are to undergo subsequent machining are frequently given a *stress-relief* heat treatment prior to that operation.

The reaction stresses that contribute to distortion are more often associated with cracking during or immediately following the welding operation (as the weld is cooling). This cracking is most likely to occur when there is great restraint to the shrinkage that occurs transverse to the direction of welding. When a multipass weld is being made, cracking tends to occur in the early beads where there is insufficient weld metal to withstand the shrinkage stresses. These cracks can be quite serious if they go undetected and are not chipped out and repaired, or melted and resolidified during subsequent passes. Figure 30-17 shows the various forms of cracking that can occur as a result of welding.

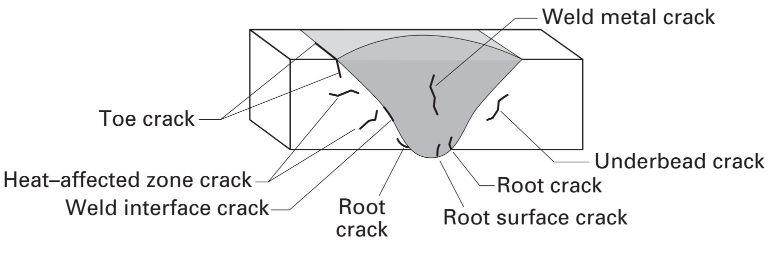

FIGURE 30-17 Various types and locations of cracking that can occur as a result of welding.

To minimize the possibility of fracture, welded joints should be designed to keep restraint to a minimum. The metals and alloys of the structure should be selected with welding in mind (more problems exist with higher-carbon steels, higher-alloy steels, and high-strength materials), and special consideration should be given when welding thicker materials. Crack-prevention efforts can also include maintaining the proper size and shape of the weld bead. While a concave fillet is desirable when machining, a concave weld profile has a greater tendency to crack upon cooling, since contraction actually increases the length of the surface. With a convex profile, the length of the surface will contract simultaneously with the volume, reducing the possibility of surface tension and cracking. Weld beads with high penetration (high depth–width ratio) are also more prone to cracking.

Still other methods to suppress cracking focus on reducing the stresses by making the cooling more uniform or relaxing them by promoting plasticity in the metals being welded. The metals to be welded may be preheated, and additional heat may be applied between the welding passes to retard cooling. Some welding codes also require the inclusion of a thermal stress relief after welding but prior to use. Hydrogen dissolved in the molten weld metal can also induce cracking. Slower welding and cooling will allow any hydrogen to escape, and the use of low-hydrogen electrodes and low-moisture fluxes will reduce the likelihood of hydrogen being present.

30.7 WELDABILITY OR JOINABILITY

It is important to note that not all joining processes are compatible with all engineering materials. While the terms *weldability* or *joinability* imply a reliable measure of a material's ability to be welded or joined, they are actually quite nebulous. One process might produce excellent results when applied to a given material, whereas another might produce a dismal failure. Within a given process, the quality of results may vary greatly with variations in the process parameters, such as electrode material, shielding gases, welding speed, and cooling rate.

Table 30-2 shows the compatibility of the various joining processes with some of the major classes of engineering materials. In each case, the process is classified as recommended (R), commonly performed (C), performed with some difficulty (D), seldom used (S), and not used (N). It should be noted, however, that the classifications are generalizations, and exceptions often exist within both the family of materials (such as the

TABLE 30-2 Weldability or Joinability of Various Engineering Materials[a]

Material	Arc Welding	Oxyacetylene Welding	Electron-Beam Welding	Resistance Welding	Brazing	Soldering	Adhesive Bonding
Cast iron	C	R	N	S	D	N	C
Carbon and low-alloy steel	R	R	C	R	R	D	C
Stainless steel	R	C	C	R	R	C	C
Aluminum and magnesium	C	C	C	C	C	S	R
Copper and copper alloys	C	C	C	C	R	R	C
Nickel and nickel alloys	R	C	C	R	R	C	C
Titanium	C	N	C	C	D	S	C
Lead and zinc	C	C	N	D	N	R	R
Thermoplastics	Heated tool R	Hot gas R	N	Induction C	N	N	C
Thermosets	N	N	N	N	N	N	C
Elastomers	N	N	N	N	N	N	R
Ceramics	N	S	C	N	N	N	R
Dissimilar metals	D	D	C	D	D/C	R	R

[a] C, commonly performed; R, recommended (easily performed with excellent results); D, difficult; N, not used; S, seldom used.

various types of stainless steels) and the types of processes (arc welding here encompasses a large variety of specific processes). Nevertheless, the table can serve as a guideline to assist in process selection.

30.8 SUMMARY

If the potential benefits of welding are to be obtained and harmful side effects are to be avoided, proper consideration should be given to (1) the selection of the process, the process parameters, and the filler material; (2) the design of the joint; and (3) the effects of heating and cooling on both the weld and parent material. Joint design should consider manufacturability, durability, fatigue resistance, corrosion resistance, and safety. Welding metallurgy helps determine the structure and properties across the joint, as well as the need for additional thermal treatments. Further attention may be required to control or minimize residual stresses and distortion.

Parallel considerations apply to brazing and soldering operations, with additional attention to the effects of interdiffusion between the filler and base metals. Flame and arc-cutting operations involve localized heating and cooling, and they also create altered structures in the heat-affected zone. Since many cut products undergo further welding or machining, however, the regions of undesirable structure may not be retained in the final product.

Key Words

autogenous weld
base metal
bead weld (or surfacing weld)
coalescence
consolidation processes
distortion
fillet weld
fusion weld
fusion zone
groove weld
heat-affected zone (HAZ)
incomplete fusion
incomplete penetration
insert
intermetallic compound
joint configuration
monolithic
peening
plug weld
postheat
preheat
rate of heat input
reaction stresses
residual stresses
stress relief
thermal cutting
weld metal (or weld pool)
weldability
welding

Review Questions

1. What types of design features favor manufacture as a joined assembly?
2. What types of manufacturing processes fall under the classification of *consolidation processes*?
3. Define *welding*.
4. What four conditions are required to produce an ideal metallurgical bond?
5. What are some of the ways in which welding processes compensate for the inability to meet the conditions of an ideal bond?
6. What are some possible problems associated with the high temperatures that are commonly used in welding?
7. What are the three primary aspects required to produce a high-quality weld?
8. How are welding processes identified by the American Welding Society?
9. What is thermal cutting?
10. What are some of the common types of weld defects?
11. What are the four basic types of fusion welds?
12. What is the role of an insert in welding?
13. What types of weld joints commonly employ fillet welds?
14. What are the five basic joint types for fusion welding?
15. What are some of the factors that influence the cost of making a weldment?
16. Why is it important to consider welded products as monolithic structures?
17. How does the fracture resistance and temperature sensitivity of a steel vary with changes in material thickness?
18. How might excessive rigidity actually be a liability in a welded structure?
19. What is autogenous welding?
20. In what way is the weld-pool segment of a fusion weld like a small metal casting?
21. Why is it possible for the fusion zone to have a chemistry that is different from that of the filler metal?
22. Why is it not uncommon for the selected filler metal to have a chemical composition that is different from the material being welded?
23. What are some of the defects or problems that can occur in the molten metal region of a fusion weld?
24. Why can the resulting material properties vary widely within welding heat-affected zones?
25. What are some of the structure and property modifications that can occur in welding heat-affected zones?
26. Why do most welding failures occur in the heat-affected zone?
27. What are some of the characteristics and consequences of welding with processes that have low rates of heat input?
28. What are some of the difficulties or limitations encountered in heat treating large, complex welded structures?
29. What is the purpose of pre- and postheating in welding operations?

30. What heat-related metallurgical effects may produce adverse results when brazing or soldering?
31. What are some of the undesirable consequences of residual stresses?
32. What is the cause of reaction-type residual stresses?
33. How are reaction stresses affected by the distance between the weld and the point of fixed constraint?
34. What are some of the techniques that can reduce the amount of distortion in a welded structure?
35. Under what conditions might residual stresses have a harmful effect on load-bearing abilities?
36. Why might a welded structure warp if the structure is machined after welding?
37. What are some of the techniques that can be employed to reduce the likelihood of cracking in a welded structure?°
38. Why are the terms *weldability* and *joinability* somewhat nebulous?

Problems

1. Through the 1940s the hulls of oceangoing freighters were constructed by riveting plates of steel together. When the defense efforts of World War II demanded accelerated production of freighters to supply U.S. troops overseas, construction of the hulls was converted to welding. The resulting Liberty Ships proved quite successful but also drew considerable attention when minor or moderate impacts (usually under low-temperature conditions) produced cracks of lengths sufficient to scuttle the ship, often up to 50 feet or more. Since the material was essentially the same and the only significant process change had been the conversion from riveting to welding, the welding process was blamed for the failures.
   a. Is this a fair assessment?
   b. What do you think may have contributed to the problem?
   c. What evidence might you want to gather to support your beliefs?
2. Two pieces of AISI 1025 steel are being shielded-metal arc welded with E6012 electrodes. Some difficulty is being experienced with cracking in the weld beads and in the heat-affected zones. What possible corrective measures might you suggest?
3. Figure 30-A schematically depicts the design of a go-cart frame with cross bars and seat support. The assembly is to be constructed from hot-rolled, low-carbon, box-channel material with miter, butt, and fillet welds at the 12 numbered joints. Due to the solidification shrinkage and subsequent thermal contraction of the joint material, the welds are best made when one or more of the sections are unrestrained. If the structure is too rigid at the time of welding, the associated dimensional changes are restricted, causing the generation of residual stresses that can lead to distortion, cracking, or tears.
   a. Consider the 12 welds in the proposed structure and recommend a welding sequence that would minimize the possibility of hot tears and cracks due to the welding of a restrained joint.
   b. Your company is developing a computer-assisted design program. Suggest one or more rules that may be programmed to aid in the selection of an acceptable weld sequence.

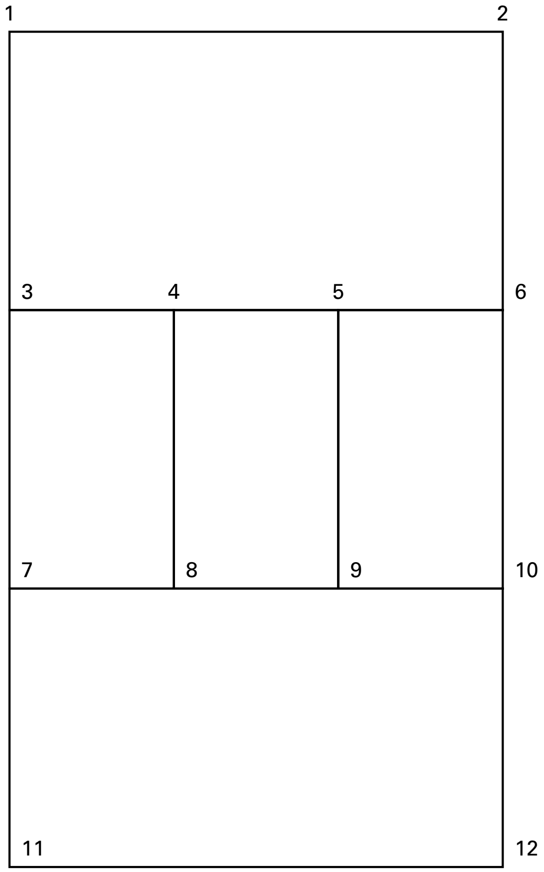

FIGURE 30-A

CHAPTER 31

GAS FLAME AND ARC PROCESSES

31.1 OXYFUEL-GAS WELDING

OXYFUEL-GAS WELDING PROCESSES

Oxyfuel-gas welding (OFW) refers to a group of welding processes that use the flame produced by the combustion of a fuel gas and oxygen as the source of heat. It was the development of a practical *torch* to burn acetylene and oxygen, shortly after 1900, that brought welding out of the blacksmith's shop, demonstrated its potential, and started its development as a manufacturing process. Other processes have largely replaced gas-flame welding in large-scale manufacturing, but the process is still popular for small-scale and repair operations because of its portability, versatility (most ferrous and nonferrous metals can be welded), and the low capital investment required. Acetylene is still the principal fuel gas.

The combustion of oxygen and *acetylene* (C_2H_2) by means of a welding torch of the type shown in Figure 31-1 produces a temperature of about 3250°C (5850°F) in a

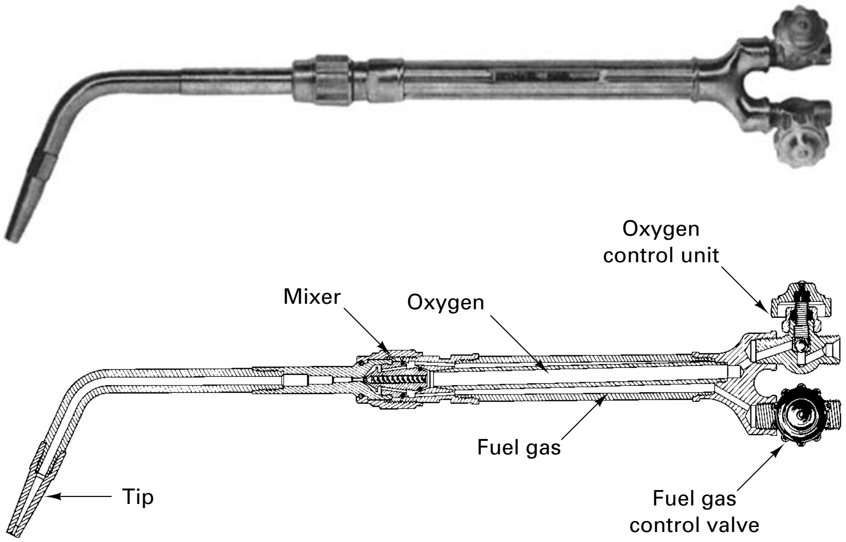

FIGURE 31-1 Typical oxyacetylene welding torch and cross-sectional schematic. *(Courtesy of Victor Equipment Company, Denton, TX)*

two-stage reaction. In the first stage, the supplied oxygen and acetylene react to produce carbon monoxide and hydrogen:

$$C_2H_2 + O_2 \rightarrow 2CO + H_2 + \text{heat}$$

This reaction occurs near the tip of the torch and generates intense heat. The second stage of the reaction involves the combustion of the CO and H_2 and occurs just beyond the first combustion zone. The specific reactions of the second stage are:

$$2CO + O_2 \rightarrow 2CO_2 + \text{heat}$$

$$H_2 + \frac{1}{2}O_2 \rightarrow H_2O + \text{heat}$$

The oxygen for these secondary reactions is generally obtained from the surrounding atmosphere.

The two-stage combustion process produces a flame having two distinct regions. As shown in Figure 31-2, the maximum temperature occurs near the end of the inner cone, where the first stage of combustion is complete. Most welding should be performed with the torch positioned so that this point of maximum temperature is just above the metal being welded. The outer envelope of the flame serves to preheat the metal and, at the same time, provides shielding from oxidation, since oxygen from the surrounding air is consumed in the secondary combustion.

Three different types of flames can be obtained by varying the oxygen–acetylene (or oxygen–fuel gas) ratio. If the ratio is between 1:1 and 1.15:1, all reactions are carried to completion and a *neutral flame* is produced. Most welding is done with a neutral flame, since it will have the least chemical effect on the heated metal.

A higher ratio, such as 1.5:1, produces an *oxidizing flame*, which is hotter than the neutral flame (about 3600°C or 6000°F) but similar in appearance. Such flames are used when welding copper and copper alloys but are generally considered harmful when

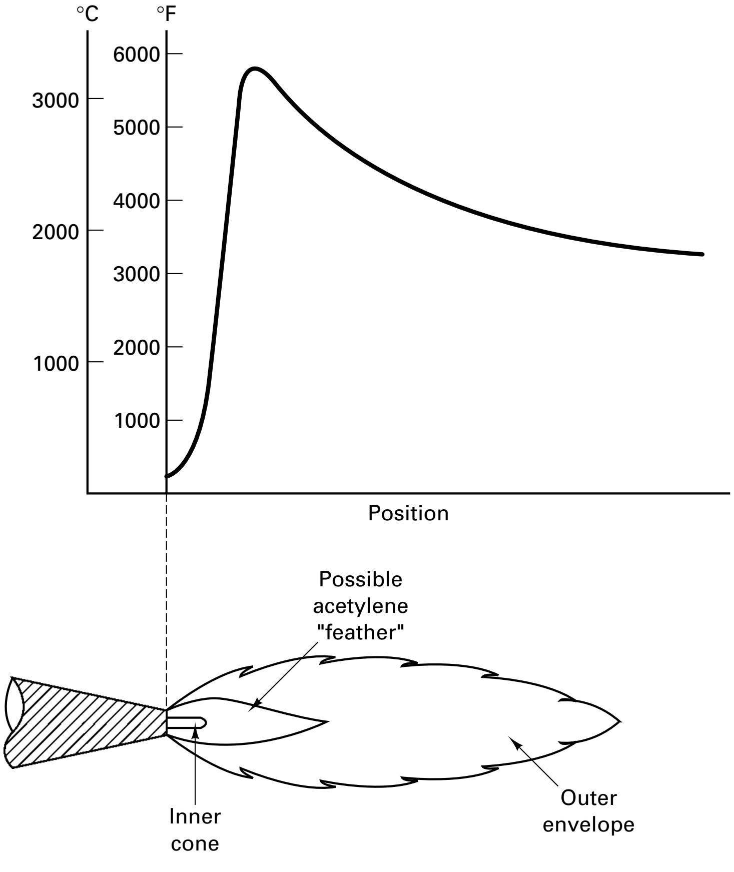

FIGURE 31-2 Typical oxyacetylene flame and the associated temperature distribution.

welding steel because the excess oxygen reacts with the carbon in the steel, lowering the carbon in the region around the weld.

Excess fuel, on the other hand, produces a *carburizing flame*. The excess fuel decomposes to carbon and hydrogen, and the flame temperature is not as great (about 3050°C or 5500°F). Flames with a slight excess of fuel are reducing flames. No carburization occurs, but the metal is well protected from oxidation. Flames of this type are used in welding Monel (a nickel–copper alloy), high-carbon steels, and some alloy steels, and for applying some types of hard-facing material.

For welding purposes, oxygen is usually supplied from pressurized tanks in a relatively pure form, but, in rare cases, air can also be used. The acetylene is usually obtained in portable storage tanks that hold up to 8.5 m^3 (300 ft^3) at 1.7 MPa (250 psi) pressure. Because acetylene is not safe when stored as a gas at pressures above 0.1 MPa (15 psi), it is usually dissolved in acetone. The storage cylinders are filled with a porous filler. Acetone is absorbed into the voids in the filler material and serves as a medium for dissolving the acetylene.

Alternative fuel gases include propane, propylene, and stabilized methyl acetylene propadiene, best known by the trade name of *MAPP* gas. While flame temperature is slightly lower, these gases can be safely stored in ordinary pressure tanks. Three to four times as much gas can be stored in a given volume, and cost per cubic foot can be less than acetylene. Butane, natural gas, and hydrogen have been used in combination with air or oxygen to weld the low-melting-temperature, nonferrous metals. They are generally not suited to the ferrous metals because the flame atmosphere is oxidizing and the heat output is too low.

The pressures used in gas-flame welding range from 0.006 to 0.1MPa (1 to 15 psi) and are controlled by pressure regulators on each tank. Because mixtures of acetylene and oxygen or air are highly explosive, precautions must be taken to avoid mixing the gases improperly or by accident. All acetylene fittings have left-hand threads, while those for oxygen are equipped with right-hand threads. This prevents improper connections.

The tip size, or orifice diameter of the torch, can be varied to control the shape of the inner cone and the flow rate of the gases. Larger tips permit greater flow of gases, resulting in greater heat input without the higher gas velocities that might blow the molten metal from the weld puddle. Larger torch tips are used for the welding of thicker metal.

USES, ADVANTAGES, AND LIMITATIONS

Almost all oxyfuel-gas welding is *fusion welding*. The metals to be joined are simply melted where a weld is desired and no pressure is required. Because a slight gap often exists between the pieces being joined, *filler metal* can be added in the form of a solid metal wire or rod. Welding rods come in standard sizes, with diameters from 1.5 to 9.5 mm ($^1/_{16}$ to $^3/_8$ in.) and lengths from 0.6 to 0.9 m (24 to 36 in.). They are available in standard grades that provide specified minimum tensile strengths or in compositions that match the base metal. Figure 31-3 shows a schematic of oxyfuel-gas welding using a consumable welding rod.

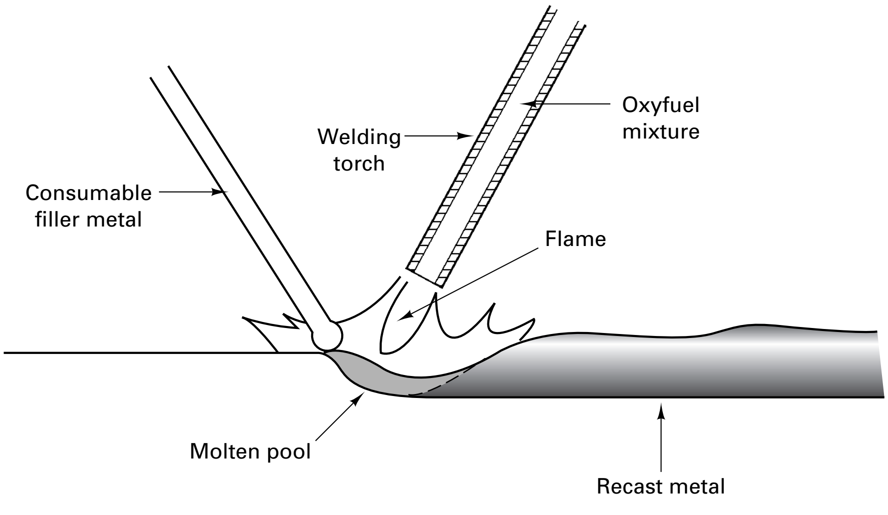

FIGURE 31-3 Oxyfuel-gas welding with a consumable welding rod.

TABLE 31-1 Process Summary: Oxyfuel-Gas Welding (OFW)

Heat source	Fuel gas—oxygen combustion
Protection	Gases produced by combustion
Electrode	None
Material joined	Best for steel and other ferrous metals
Rate of heat input	Low
Weld profile (Depth/Width)	$^1/_3$
Max. penetration	3 mm
Assets	Cheap, simple equipment, portable, versatile
Limitations	Large HAZ, slow

To promote the formation of a better bond, *fluxes* may be used to clean the surfaces and remove contaminating oxide. In addition, the gaseous shield produced by vaporizing flux can prevent further oxidation during the welding process, and the slag produced by solidifying flux can protect the weld pool as it cools. Flux can be added as a powder, the welding rod can be dipped in a flux paste, or the rods can be precoated.

The OFW processes can produce good-quality welds if proper caution is exercised. Welding can be performed in all positions, the temperature of the work can be easily controlled, and the puddle is visible to the welder. However, exposure of the heated and molten metal to the various gases in the flame and atmosphere makes it difficult to prevent contamination. Since the heat source is not concentrated, heating is rather slow. A large volume of metal is heated, and distortion is likely to occur. The thickness of the material being joined is usually less than 6.5 mm ($^1/_4$ in.). Thus, in production applications, the flame-welding processes have largely been replaced by arc welding. Nevertheless, flame welding is still quite common in field work, in maintenance and repairs, and in fabricating small quantities of specialized products.

Oxyfuel equipment is quite portable, relatively inexpensive, and extremely versatile.

A single set of equipment can be used for welding, brazing, and soldering, and as a heat source for bending, forming, straightening, and hardening. With the modifications to be discussed shortly, it can also perform flame cutting. Table 31-1 summarizes some of the key features of oxyfuel-gas welding. Table 31-2 shows its compatibility with some common engineering materials.

PRESSURE GAS WELDING

Pressure gas welding (PGW) is a process that uses equipment similar to the oxyfuel-gas process to produce butt joints between the ends of objects such as pipe and railroad rail. The ends are heated with a gas flame to a temperature below the melting point,

TABLE 31-2 Engineering Materials and Their Compatibility with Oxyfuel Welding

Material	Oxyfuel Welding Recommendation
Cast iron	Recommended with cast iron filler rods; braze welding recommended if there are no corrosion objections
Carbon and low-alloy steels	Recommended for low-carbon and low-alloy steels, using rods of the same material; more difficult for higher carbon
Stainless steel	Common for thinner material; more difficult for thicker
Aluminum and magnesium	Common for aluminum thinner than 1 in.; difficult for magnesium alloys
Copper and copper alloys	Common for most alloys; more difficult for some types of bronzes
Nickel and nickel alloys	Common for nickel, Monels, and Inconels
Titanium	Not recommended
Lead and zinc	Recommended
Thermoplastics, thermosets, and elastomers	Hot-gas welding used for thermoplastics, not used with thermosets and elastomers
Ceramics and glass	Seldom used with ceramics, but common with glass
Dissimilar metals	Difficult; best if melting points are within 50°F; concern for galvanic corrosion
Metals to nonmetals	Not recommended
Dissimilar nonmetals	Difficult

and the soft metal is then forced together under pressure. Pressure gas welding, therefore, is actually a form of solid-state welding where the gas flame simply softens the metal and coalescence is produced by pressure.

31.2 OXYGEN TORCH CUTTING

PROCESSES

Oxyfuel-gas cutting (OFC), commonly called flame cutting, is the most common *thermal cutting* process. In some cases the metal is merely melted by the flame of the oxyfuel-gas torch and is blown away to form a gap, or *kerf*, as illustrated in Figure 31-4. When ferrous metal is cut, however, the process becomes one where the iron actually burns (or oxidizes) at high temperatures according to one or more of the following reactions:

$$Fe + O \rightarrow FeO + \text{heat}$$

$$3Fe + 2O_2 \rightarrow Fe_3O_4 + \text{heat}$$

$$4Fe + 3O_2 \rightarrow 2Fe_2O_3 + \text{heat}$$

Because these reactions do not occur until the metal is above 815°C (1500°F), the oxyfuel flame is first used to raise the metal to the temperature where burning can be initiated. Then a stream of pure oxygen is added to the torch (or the oxygen content of the oxyfuel mixture is increased) to oxidize the iron. The liquid iron oxide and any unoxidized molten iron are then expelled from the joint by the kinetic energy of the oxygen-gas stream. Because of the low rate of heat input and the need for preheating ahead of the cut, oxyfuel cutting produces a relatively large heat-affected zone and associated distortion compared to competing techniques. Therefore, the process is best used where the edge finish or tolerance is not critical and the edge material will either be subsequently welded or removed by machining. Cutting speeds are relatively slow, but the low cost of both the required equipment and its operation make the process attractive for many applications.

Theoretically, the heat supplied by the oxidation will be sufficient to keep the cut progressing, but additional heat is often necessary to compensate for losses to the atmosphere and the surrounding metal. If the workpiece is already hot from other processing, such as solidification or hot working, no supplemental heating is required and a supply of oxygen through a small pipe is all that is needed to initiate and continue a cut. This is known as *oxygen lance cutting* (OLC). A workpiece temperature of about 1200°C (2200°F) is required to sustain continuous cutting.

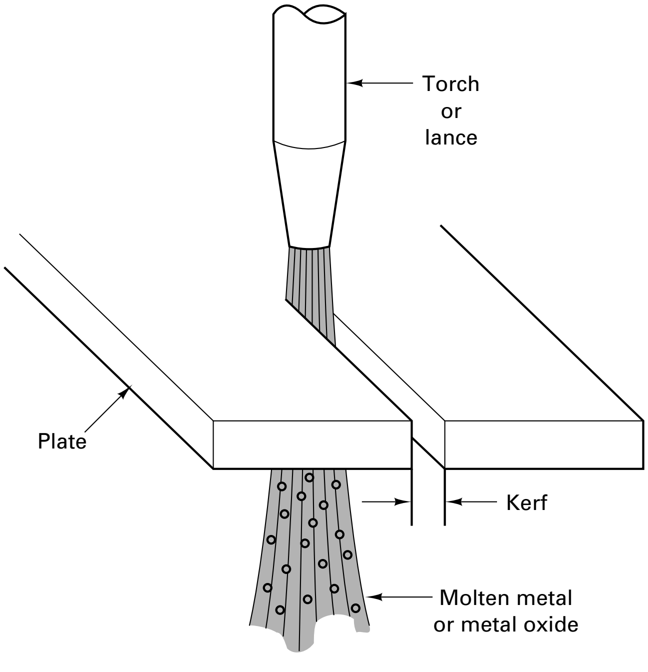

FIGURE 31-4 Flame cutting of a metal plate.

Oxyfuel-gas cutting works best on metals that oxidize readily but do not have high thermal conductivities. Carbon and low-alloy steels can be readily cut in thicknesses from 5 mm to in excess of 75 cm (30 in.). Stainless steels contain oxidation-resistant ingredients and are difficult to cut, as are aluminum and copper alloys.

FUEL GASES FOR OXYFUEL-GAS CUTTING

Acetylene is by far the most common fuel used in oxyfuel-gas cutting, and the process is often referred to as *oxyacetylene cutting* (OFC-A). Figure 31-5 shows a typical cutting torch. The tip contains a circular array of small holes through which the oxygen–acetylene mixture is supplied to form the heating flame. A larger hole in the center supplies a stream of oxygen and is controlled by a lever valve. The rapid flow of the cutting oxygen not only oxidizes the hot metal but also blows the formed oxides from the cut.

If the torch is adjusted and manipulated properly, it is possible to produce a relatively smooth cut. Cut quality, however, depends upon careful selection of the process variables, including preheat conditions, oxygen flow rate, and cutting speed. Oxygen purities over 99.5% are required for the most efficient cutting. If the purity drops to 98.5%, cutting speed will be reduced by 15%, oxygen consumption will increase by 25%, and the quality of the cut will diminish.

Cutting torches can be manipulated manually. However, when the process is applied to manufacturing, the desired path is usually controlled by mechanical or programmable means. Specialized equipment has been designed to produce straight cuts in flat stock and square-cut ends on pipe. The marriage of computer numerically controlled (CNC) machines and cutting torches has also proven to be quite popular. This approach, along with the use of robot-mounted torches, provides great flexibility along with good precision and control.

Fuel gases other than acetylene can also be used for oxyfuel-gas cutting, the most common being natural gas (OFC-N) and propane (OFC-P). While their flame temperatures are lower than that of acetylene, their use is generally a matter of economics and gas availability. For certain special work, hydrogen can also be used (OFC-H).

STACK CUTTING

When a modest number of duplicate parts are to be cut from thin sheet, but not enough to justify the cost of a blanking die, stack cutting may be the answer. The sheets should be flat, smooth, and free of scale, and they should be clamped together tightly so that there are no intervening gaps that could interrupt uniform oxidation or permit slag or

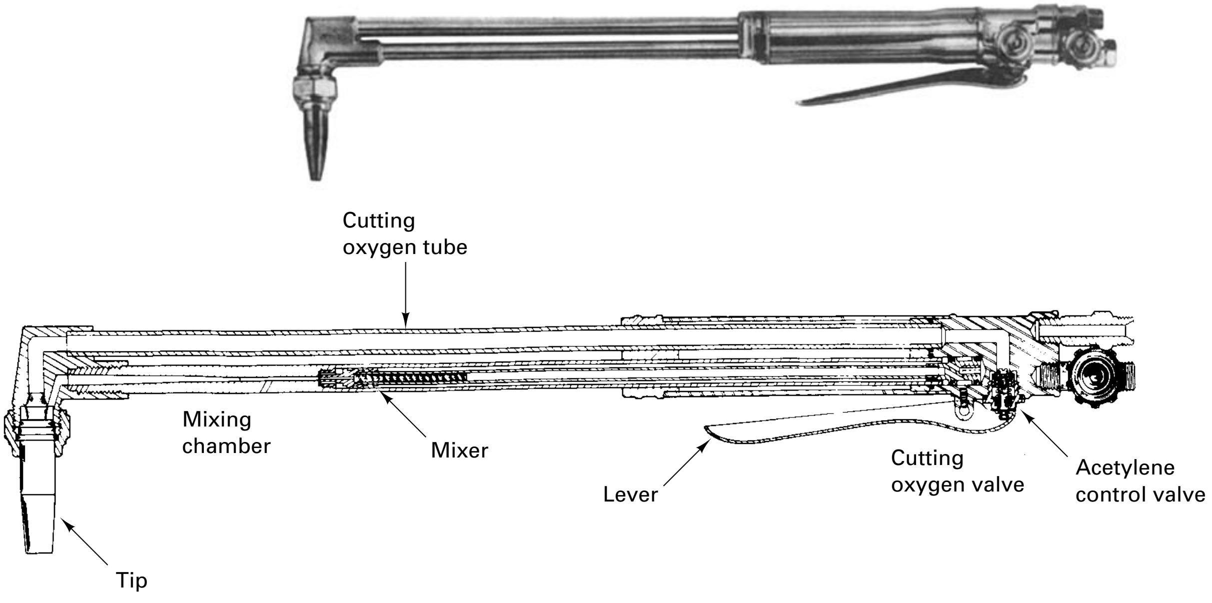

FIGURE 31-5 Oxyacetylene cutting torch and cross-sectional schematic. *(Courtesy of Victor Equipment Company, Denton, TX)*

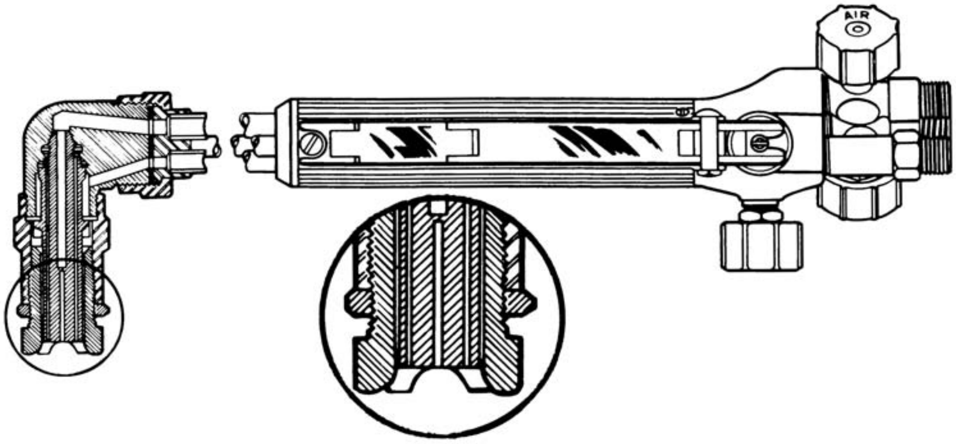

FIGURE 31-6 Underwater cutting torch. Note the extra set of gas openings in the nozzle to permit the flow of compressed air and the extra control valve. *(Courtesy of Bastian-Blessing Company, Chicago, IL)*

molten metal to be entrapped. Obviously, stack cutting will produce a less accurate cut than could be achieved by using a blanking die.

METAL POWDER CUTTING, CHEMICAL FLUX CUTTING, AND OTHER THERMAL METHODS

When cutting hard-to-cut materials, modified torch techniques may be required. Metal powder cutting (POC) injects iron or aluminum powder into the flame to raise its cutting temperature. Chemical flux cutting (FOC) adds a fine stream of special flux to the cutting oxygen to increase the fluidity of the high-melting-point oxides. Both of these methods, however, have largely been replaced by plasma arc cutting (PAC), which is discussed as an extension of plasma arc welding, to be presented later in this chapter. Laser- and electron-beam cutting will be presented with their welding parallels in a future chapter.

UNDERWATER TORCH CUTTING

The thermal cutting of materials underwater presents a special challenge. A specially designed torch, like the one shown in Figure 31-6, is used to cut steel. An auxiliary skirt surrounds the main tip, and an additional set of gas passages conducts a flow of compressed air that provides secondary oxygen for the oxyacetylene flame and expels water from the zone where the burning of metal occurs. The torch is either ignited in the usual manner before descent or by an electric spark device after being submerged. Acetylene gas is used for depths up to about 7.5 m (25 ft). For greater depths, hydrogen is used, since the environmental pressure is too great for the safe use of acetylene.

■ 31.3 FLAME STRAIGHTENING

Flame straightening uses controlled, localized *upsetting* as a means of straightening warped or buckled material. Figure 31-7 illustrates the theory of the process. If a straight piece of metal is heated in a localized area, such as the shaded area of the upper diagram, the metal on side *b* will be upset (i.e., plastically deformed) as it softens and tries to expand against the cooler restraining metal. When the upset portion cools, it will con-

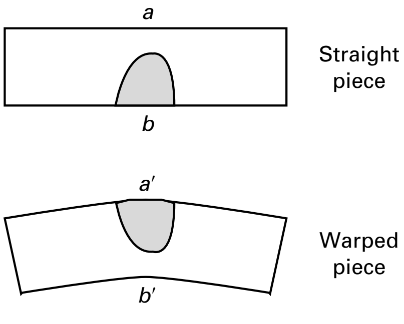

FIGURE 31-7 Schematic illustrating the theory of flame straightening.

tract, and the resulting piece will be shorter on side *b*, forcing it to bend to the shape in the lower diagram.

If the starting material is bent or warped, as in the lower segment of Figure 31-7, the upper surface can be heated. Upsetting and subsequent thermal contraction will shorten the upper surface at *a′*, bringing the plate back to a straight or flat configuration. This type of procedure can be used to restore structures that have been bent in an accident, such as automobile frames.

A similar process can be used to flatten metal plates that have become dished. Localized spots about 50 mm (2 in.) in diameter are quickly heated to the upsetting temperature while the surrounding metal remains cool. Cool water is then sprayed onto the plate, and the contraction of the upset spot brings the buckle into an improved degree of flatness. To remove large buckles, the process may have to be repeated at several spots within the buckled area.

Several cautions should be noted. When straightening steel, consideration should be given to the possible phase transformations that could occur during the heating and cooling. Since rapid cooling is used and martensite may form, a subsequent tempering operation may be required. In addition, one should also consider the residual stresses that are induced and their effect on subsequent cracking, stress–corrosion cracking, and other modes of failure. The effects of phase transformations and residual stresses have been discussed more fully in Chapter 31.

Also, flame straightening should not be attempted with thin material. For the process to work, the metal adjacent to the heated area must have sufficient rigidity to induce upsetting. If the material is too thin, localized heating and cooling will simply transfer the buckle from one area to another.

■ 31.4 ARC WELDING

With the development of commercial electricity in the late nineteenth century, it was soon recognized that an *arc* between two electrodes was a concentrated heat source that could produce temperatures approaching 4000°C (7000°F). As early as 1881, various attempts were made to use an arc as the heat source for fusion welding. A carbon rod was selected as one *electrode* and the metal workpiece became the other. Figure 31-8 depicts the basic electrical circuit. If needed, *filler metal* was provided by a metallic wire or rod that was independently fed into the arc. As the process developed, the filler metal replaced the carbon rod as the upper electrode. The metal wire not only carried the welding current but, as it melted in the arc, it also supplied the necessary filler.

The results of these early efforts were extremely uncertain. Because of the instability of the arc, a great amount of skill was required to maintain it, and contamination of the weld resulted from the exposure of hot metal to the atmosphere. There was little or no understanding of the metallurgical effects and requirements of arc welding. Consequently, while the great potential was recognized, very little use was made of the process until after World War I. Shielded metal electrodes were developed around 1920. These electrodes enhanced the stability of the arc by shielding it from the atmosphere and provided a fluxing action to the molten pool. The major problems of arc welding were overcome, and the process began to expand rapidly.

All *arc-welding* processes employ the basic circuit depicted in Figure 31-8. Welding currents vary from 1 to 4000 amps, with the range from 100 to 1000 being most typical.

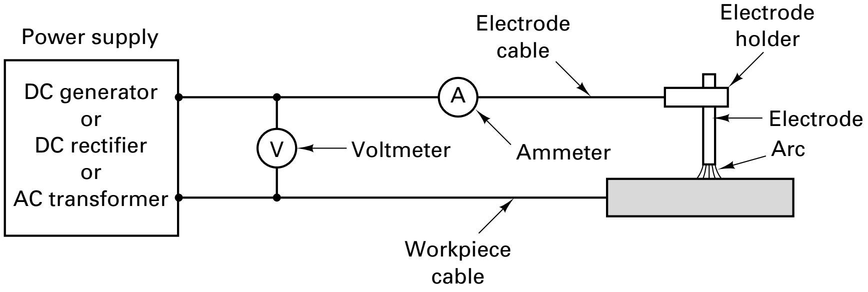

FIGURE 31-8 The basic electrical circuit for arc welding.

Voltages are generally in the range of 20 to 50 volts. If direct current is used and the electrode is made negative, the condition is known as straight polarity (SPDC) or *DCEN*, for direct-current electrode-negative. Electrons are attracted to the positive workpiece, while ionized atoms in the arc column are accelerated toward the negative electrode. Since the ions are far more massive than the electrons, the heat of the arc is more concentrated at the electrode. DCEN processes are characterized by fast melting of the electrode (high metal deposition rates) and a shallow molten pool on the workpiece (weld penetration). If the work is made negative and the electrode positive, the condition is known as reverse polarity (RPDC) or *DCEP*, for direct-current electrode-positive. The positive ions impinge on the workpiece, breaking up any oxide films and giving deeper penetration. The metal deposition rate is lower, however. Sinusoidal *alternating current* provides a 50–50 average of the above two modes and is a popular alternative to the dc conditions. *Variable polarity* power supplies also alternate between DCEP and DCEN conditions, but they use rectangular waveforms to vary the fraction of time in each mode as well as the frequency of switching. Weld characteristics can now be varied over a continuous range between DCEN and DCEP conditions.

In one group of arc-welding processes, the electrode is consumed (*consumable-electrode processes*) and thus supplies the metal needed to fill the joint. Consumable electrodes have a melting temperature below the temperature of the arc. Small droplets are melted from the end of the electrode and pass to the workpiece. The size of these droplets varies greatly, and the transfer mechanism depends on the type of electrode, welding current, and other process parameters. Figure 31-9 depicts metal transfer by the globular, spray, and short-circuit transfer modes. As the electrode melts, the arc length and the electrical resistance of the arc path will vary. To maintain a stable arc and satisfactory welding conditions, the electrode must be moved toward the work at a controlled rate. Manual arc welding is almost always performed with shielded (covered) electrodes. Continuous bare-metal wire can be used as the electrode in automatic or semiautomatic arc welding, but this is always in conjunction with some form of shielding and arc-stabilizing medium and automatic feed control devices that maintain the proper arc length.

The second group of arc-welding processes employs a tungsten electrode, which is not consumed by the arc, except by relatively slow vaporization. In these *nonconsumable-electrode processes*, a separate metal wire is required to supply the filler metal.

Because of the wide variety of processes available, arc welding has become a widely used means of joining material. Each process and application, however, requires the selection or specification of the welding voltage, welding current, arc polarity (straight polarity, reversed polarity, or alternating), arc length, welding speed (how fast the electrode is moved across the workpiece), arc atmosphere, electrode or filler material, and flux. Filler materials must be selected to match the base metal with respect to properties and/or alloy content (chemistry). For many of the processes, the quality of the weld also depends on the skill of the operator. Automation and robotics are reducing this dependence, but the selection and training of welding personnel are still of great importance.

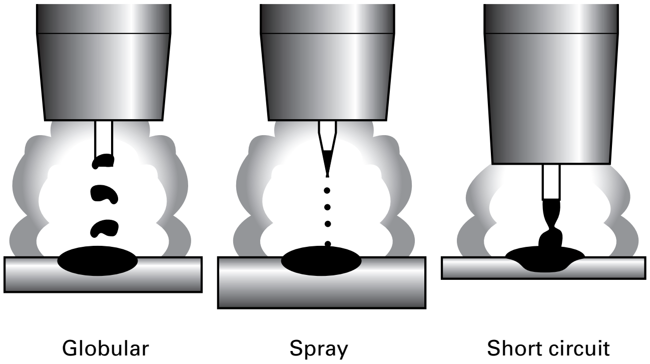

FIGURE 31-9 Three modes of metal transfer during arc welding. *(Courtesy of Republic Steel Corporation, Youngstown, OH)*

31.5 CONSUMABLE-ELECTRODE ARC WELDING

Four processes make up the bulk of consumable-electrode arc welding:

1. Shielded metal arc welding (SMAW)
2. Flux-cored arc welding (FCAW)
3. Gas metal arc welding (GMAW)
4. Submerged arc welding (SAW)

These processes all have a medium rate of heat input and produce a fusion zone whose depth is approximately equal to its width. Because the fusion zone is composed of metal from both of the pieces being joined, plus melted filler (i.e., electrode), the electrode must be of the same material as that being welded; the processes cannot be used to join dissimilar metals or ceramics.

SHIELDED METAL ARC WELDING

Shielded metal arc welding (SMAW), also called *stick welding* or covered-electrode welding, is among the most widely used welding processes because of its versatility and because it requires only low-cost equipment. The key to the process is a finite-length electrode that consists of metal wire, usually from 1.5 to 6.5 mm in diameter and 20 to 45 cm in length. Surrounding the wire is a bonded coating containing chemical components that add a number of desirable characteristics, including all or many of the following:

1. Vaporize to provide a protective atmosphere (a gas shield around the arc and pool of molten metal).
2. Provide ionizing elements to help stabilize the arc, reduce weld metal spatter, and increase efficiency of deposition.
3. Act as a *flux* to deoxidize and remove impurities from the molten metal.
4. Provide a protective *slag* coating to accumulate impurities, prevent oxidation, and slow the cooling of the weld metal.
5. Add alloying elements.
6. Add additional filler metal.
7. Affect arc *penetration* (the depth of melting in the workpiece).
8. Influence the shape of the weld bead.

The coated electrodes are classified by the tensile strength of the deposited weld metal, the welding position in which they may be used, the preferred type of current and polarity (if direct current), and the type of coating. A four- or five-digit system of designation has been adopted by the American Welding Society (AWS) and is presented in Figure 31-10. As an example, type E7016 is a low-alloy steel electrode that will provide a deposit with a minimum tensile strength of 70,000 psi (485 MPa) in the non-stress-relieved condition; it can be used in all positions, with either alternating or reverse-polarity direct current; and it has a low-hydrogen plus potassium coating. To assist in identification, all electrodes are marked with colors in accordance with a standard established by the National Electrical Manufacturers Association. Electrode selection consists of determining the electrode coating, coating thickness, electrode composition, and electrode diameter. The current type and polarity are matched to the electrode.

A variety of electrode coatings have been developed. The cellulose and titania (rutile) coatings contain: SiO_2; TiO_2; small amounts of FeO, MgO, and Na_2O; and volatile matter. Upon decomposition, the volatile matter may release hydrogen, which can dissolve in the weld metal and lead to embrittlement or cracking in the joint. Low-hydrogen electrodes are available with compositions designed to provide shielding without the emission of hydrogen. Since many of the electrode coatings can absorb moisture, and this is another source of undesirable hydrogen, the coated electrodes are often baked just prior to use.

To initiate a weld, the operator briefly touches the tip of the electrode to the workpiece and quickly raises it to a distance that will maintain a stable arc. The intense heat quickly melts the tip of the electrode wire, the coating, and portions of the adjacent base

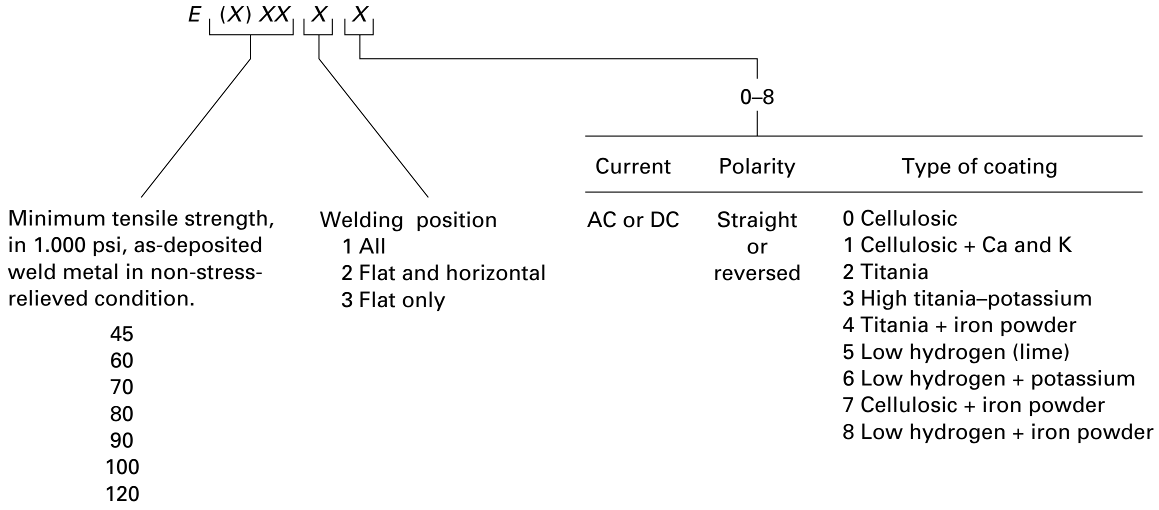

FIGURE 31-10 Designation system for arc-welding electrodes.

metal. As part of the electrode coating melts and vaporizes, it forms a protective atmosphere of CO, CO_2, and other gases that stabilizes the arc and protects the molten and hot metal from contamination. Other coating components surround the metal droplets with a layer of liquid flux and slag. The fluxing constituents unite with any impurities in the molten metal and float them to the surface to be entrapped in the slag coating that forms over the weld. The slag coating then protects the cooling metal from oxidation and slows down the cooling rate to prevent the formation of hard, brittle structures. The glassy slag is easily chipped from the weld when it has cooled. Figure 31-11 illustrates the shielded metal arc welding process, and Figure 31-12 provides a schematic of metal deposition from a shielded electrode.

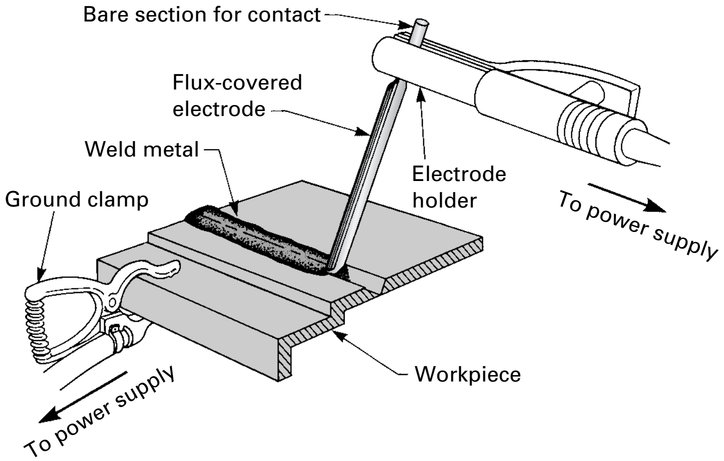

FIGURE 31-11 A shielded metal arc welding (SMAW) system.

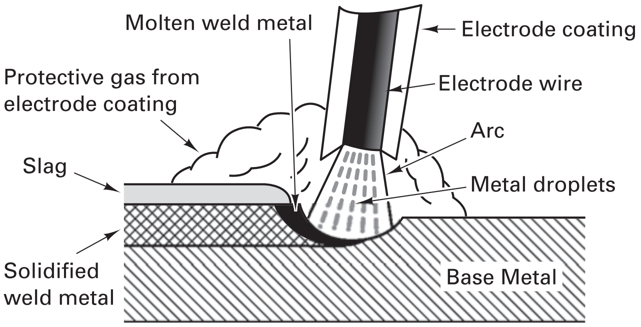

FIGURE 31-12 Schematic diagram of shielded metal arc welding (SMAW). *(Courtesy of American Iron and Steel Institute, Washington, DC.)*

Iron powder can be added to the electrode coating to significantly increase the amount of weld metal that can be deposited with a given size electrode wire and current. Alloy elements can also be incorporated into the coating to adjust the chemistry of the weld.

Special contact or drag electrodes utilize coatings that are designed to melt more slowly than the filler wire. If these electrodes are tracked along the surface of the work, the faster-melting center wire will be recessed by the proper length to maintain a stable arc.

Since electrical contact must be maintained with the center wire, SMAW electrodes are finite-length "sticks." Length is limited since the current must be supplied near the arc, or the electrode will tend to overheat (by electrical resistance heating) and ruin the coating. Overheating also restricts the weld currents to values below 300 amps (generally about 40 amps per millimeter of electrode diameter). As a result, the arc temperatures are somewhat low, and penetration is generally less than 5 mm ($^3/_{16}$ in.). Welding of material thicker than 5 mm will require multiple passes, and the slag coating must be removed between each pass.

The shielded metal arc process is best used for welding ferrous metals; carbon steels, alloy steels, stainless steels, and cast irons can all be welded. Welds can be made in all positions. DCEP conditions are used to obtain the deepest possible penetration, with alternate modes being employed when welding a thin sheet. The mode of metal transfer is either globular or short circuit.

Shielded metal arc welding is a simple, inexpensive, and versatile process, requiring only a power supply, power cables, an electrode holder, and a small variety of electrodes. The equipment is portable and can even be powered by gasoline or diesel generators. Therefore, it is a popular process in job shops and is used extensively in repair operations. The electrode provides and regulates its own flux, and there is less sensitivity to wind and drafts than in the gas-shielded processes. Welds can be made in all positions. Unfortunately, the process is discontinuous, produces shallow welds, and requires slag removal after each welding pass. Table 31-3 presents a process summary for shielded metal arc welding.

FLUX-CORED ARC WELDING

Flux-cored arc welding (FCAW) overcomes some of the limitations of the shielded metal arc process by moving the powdered flux to the interior of a continuous tubular electrode (Figure 31-13). When the arc is established, the vaporizing flux again produces a protective atmosphere and also forms a slag layer over the weld pool that will require subsequent removal. Alloy additions (metal powders) can be blended into the flux to create a wide variety of filler metal chemistries. Compared to the stick electrodes of the shielded metal arc process, the flux-cored electrode is both continuous and less bulky, since binders are no longer required to hold the flux in place.

The continuous electrode is fed automatically through a welding gun, with electrical contact being maintained through the bare-metal exterior of the wire at a position near the exit of the gun. Overheating of the electrode is no longer a problem, and welding

TABLE 31-3 Process Summary: Shielded Metal Arc Welding (SMAW)

Heat source	Electric arc
Protection	Slag from flux and gas from vaporized coating material
Electrode	Discontinuous, consumable
Material joined	Best for steel
Rate of heat input	Medium
Weld profile (D/W)	1
Current	<300 amps
Max. penetration	3–6 mm
Assets	Cheap, simple equipment
Limitations	Discontinuous, shallow welds; requires slag removal

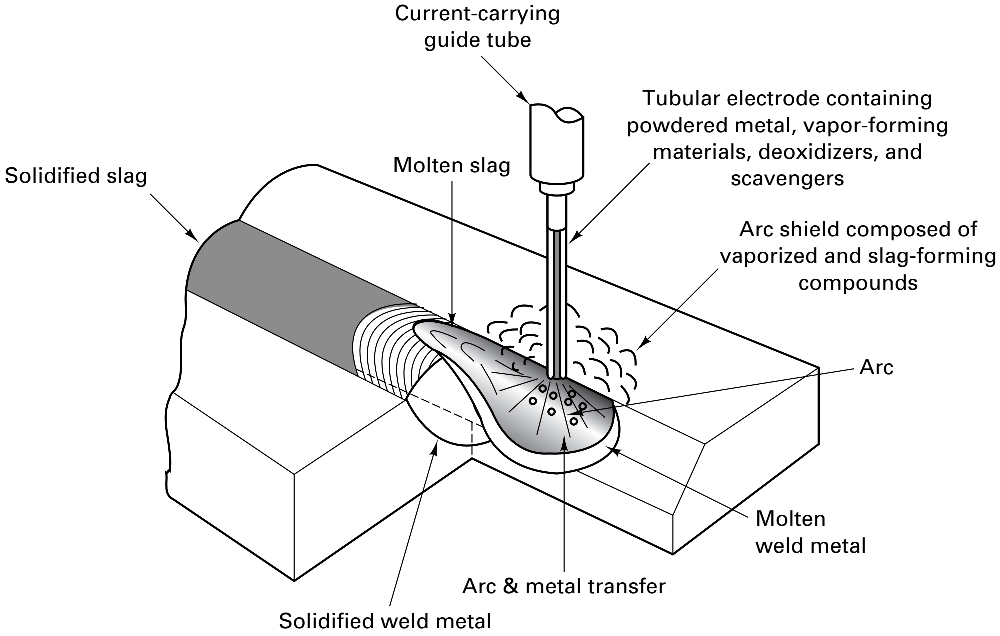

FIGURE 31-13 The flux-cored arc welding (FCAW) process. *(Courtesy of The American Welding Society, New York.)*

currents can be increased to about 500 A. The higher heat input increases penetration depth to about 1 cm ($^3/_8$ in.). The process is best used for welding steels, and welds can be made in all positions. Direct-current electrode-positive (DCEP) conditions are almost always used for the enhanced penetration. High deposition rates are possible, but the equipment cost is greater than that of SMAW because of the need for a controlled wire feeder and more costly power supply. Good ventilation is required to remove the fumes generated by the vaporizing flux.

In the basic flux-cored arc welding process, the shielding gas is provided by the vaporization of flux components. Better protection and cleaner welds can be produced by combining the flux with a flow of externally supplied shielding gas, such as CO_2.

Table 31-4 presents a process summary of flux-cored arc welding.

GAS METAL ARC WELDING

If the supplemental shielding gas flowing through the torch (described above) becomes the primary protection for the arc and molten metal, there is no longer a need for the volatilizing flux. The consumable electrode can now become a continuous, solid, uncoated metal wire or a continuous hollow tube with powdered alloy additions in the center, known as a metal-cored electrode. The resulting process, shown in Figure 31-14, was formerly called metal inert-gas, or MIG, welding and is now known as *gas metal arc welding (GMAW)*. The arc is still maintained between the workpiece and the automatically fed bare-wire electrode, which continues to provide the necessary filler metal.

TABLE 31-4 Process Summary: Flux-Cored Arc Welding (FCAW)

Heat source	Electric arc
Protection	Slag and gas from flux (optional secondary gas shield)
Electrode	Continuous, consumable
Material joined	Best for steel
Rate of heat input	Medium
Weld profile (D/W)	1
Current	<500 amps
Max. penetration	6–10 mm
Assets	Continuous electrode
Limitations	Requires slag removal

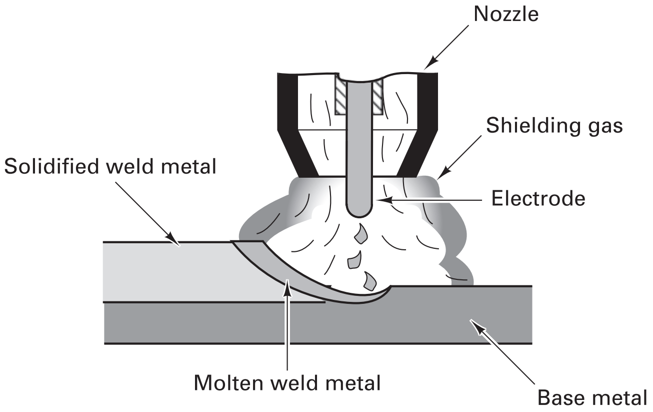

FIGURE 31-14 Schematic diagram of gas metal arc welding (GMAW). *(Courtesy of American Iron and Steel Institute, Washington, DC.)*

Electrode diameters range from 0.6 to 6.4 mm. The welding current, penetration depth, and process cost are all similar to the flux-cored process.

Because shielding is provided by the flow of gas, and fluxing and slag-forming agents are no longer required, the gas metal arc process can be applied to all metals. Argon, helium, and mixtures of the two are the primary shielding gases. When welding steel, some O_2 or CO_2 is usually added to improve the arc stability and reduce weld spatter. The cheaper CO_2 can also be used alone when welding steel, provided that a deoxidizing electrode wire is employed. Nitrogen and hydrogen may also be added to modify arc characteristics. Since these shielding gases only provide protection and do not remove existing contamination, starting cleanliness is critical to the production of a good weld.

The specific shielding gases can have considerable effect on the stability of the arc, the metal transfer from the electrode to the work, and also the heat transfer behavior, penetration, and tendency for undercutting (weld pool extending laterally beneath the surface of the base metal). Helium produces the hottest arc and deepest penetration. Argon is intermediate, and CO_2 yields the lowest arc temperatures and shallowest penetrations. Since argon is heavier than air, it tends to blanket the weld area, enabling the use of low gas flow rates. The lighter-than-air helium generally requires higher flow rates than either argon or carbon dioxide.

Electronic controls can be used to alter the welding current, enabling further control of the metal transfer mechanism, shown previously in Figure 31-9. *Short-circuit transfer* (GMAW-S) is promoted by the lowest currents and voltages (14 to 21 volts) and the use of CO_2 shield gas. The advancing electrode makes direct contact with the weld pool, and the short circuit causes a rapid rise in current. Big molten globs form on the tip of the electrode and then separate, forming a gap between the electrode and workpiece. This gap reinitiates a brief period of arcing, but the rate of electrode advancement exceeds the rate of melting in the arc, and another short circuit occurs. The power conditions oscillate between arcing and short circuiting at a rate of 20 to 200 cycles per second. Short-circuit transfer is preferred when joining thin materials and can be used in all welding positions, but it suffers from a high degree of spatter.

If the voltage and amperage are increased, the mode becomes one of *globular transfer*. The electrode melts from the heat of the arc, and metal drops form, with a diameter approximately equal to that of the electrode wire. Gravity and electromagnetic forces then transfer the drops to the workpiece at a rate of several per second. Since gravity plays a role in metal transfer, there is a definite limitation on the positions of welding. With even higher currents and voltages (25 to 32 volts and about 200 amps), argon gas shielding, and DCEP conditions, *spray transfer* (GMAW-ST) occurs. Small droplets emerge from a pointed electrode at a rate of hundreds per second. Because of their small size and the greater electromagnetic effects, the droplets are easily propelled across the arc in any direction, irrespective of the effects of gravity. Spray transfer is accompanied by deep penetration and low spatter. The biggest problem with out-of-position welding may be keeping the rather large molten weld pool in place until it solidifies.

Pulsed spray transfer (GMAW-P) was invented in the 1960s to overcome some of the limitations of conventional spray transfer. In this mode, a low welding current is first used to create a molten globule on the end of the filler wire. A burst of high current then "explodes" the globule and transfers the metal across the arc in the form of a spray. By alternating low and high currents at a rate of 60 to 600 times per second, the filler metal is transferred in a succession of rapid bursts, similar to the emissions of a rapidly squeezed aerosol atomizer. With the pulsed form of deposition, there is less heat input to the weld, and the weld temperatures are reduced. Thinner material can be welded, distortion is reduced, workpiece discoloration is minimized, heat-sensitive parts can be welded, high-conductivity metals can be joined, electrode life is extended, electrode cooling techniques may not be required, and fine microstructures are produced in the weld pool. Welds can be made in all positions, and the use of pulsed power lowers spattering and improves the safety of the process. The high speed of the process is attractive for productivity, and the energy or power required to produce a weld is lower than with other methods (reduced cost). Controls can be adjusted to alter the shape of the weld pool and vary the penetration.

In general, the gas metal arc process is fast and economical and currently accounts for over half of all weld metal deposition. There is no frequent change of electrodes as with the shielded metal arc process. No flux is required, and no slag forms over the weld. Thus, multiple-pass welds can be made without the need for intermediate cleaning. The process can be readily automated, and the lightweight, compact welding unit lends itself to robotic manipulation. A direct-current electrode-positive (DCEP) arc is generally used because of its deep penetration, spray transfer, and the ability to produce smooth welds with good profile. Process variables include type of current, current magnitude, shielding gas, electrode diameter, electrode composition, electrode stickout (extension beyond the gun), welding speed, welding voltage, and arc length. Table 31-5 provides a process summary for gas metal arc welding.

In a process modification known as advanced gas metal arc welding (AGMAW), a second power source is used to preheat the filler wire before it emerges from the welding torch. Less arc heating is needed to produce a weld, so less base metal is melted, producing less dilution of the filler metal and less penetration.

Another recent modification is the use of flat electrode wire, typically having a rectangular cross section of about 4 mm by 0.5 mm. By having a larger surface area participating in the arc, deposition rate is similar to a two-wire feed with only a single-wire delivery system. The arc is also asymmetric. Orienting the wire perpendicular to the weld seam produces a wide, shallow weld pool, suitable for bridging gaps and often eliminating the need to weave during deposition. A narrower, deeper weld pool results when the wire is parallel to the weld. Varying the angle between parallel and perpendicular generates a spectrum of weld-pool geometries.

SUBMERGED ARC WELDING

No shielding gas is used in the *submerged arc welding (SAW)* process, depicted in Figure 31-15. Instead, a thick layer of granular flux is deposited just ahead of a solid bare-wire consumable electrode, and the arc is maintained beneath the blanket of flux with only a few small flames being visible. A portion of the flux melts and acts to remove impurities from the rather large pool of molten metal, while the unmelted excess provides additional

TABLE 31-5 Process Summary: Gas Metal Arc Welding (GMAW)

Heat source	Electric arc
Protection	Externally supplied shielding gas
Electrode	Continuous, consumable
Material joined	All common metals
Rate of heat input	Medium
Weld profile (D/W)	1
Current	<500 amps
Max. penetration	6–10 mm
Assets	No slag to remove
Limitations	More costly equipment than SMAW or FCAW

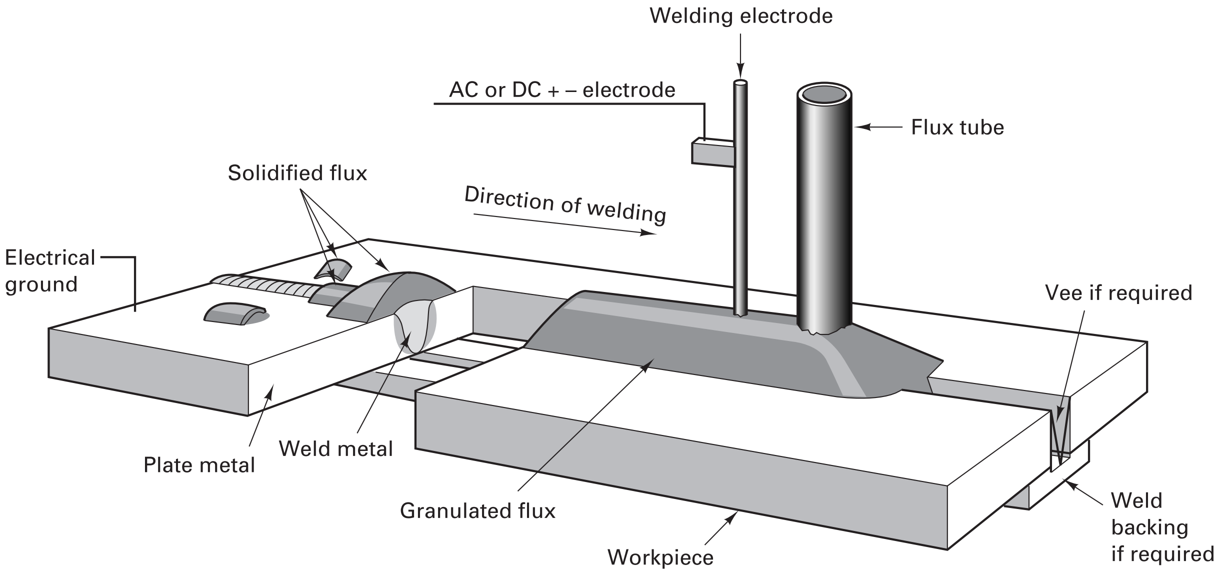

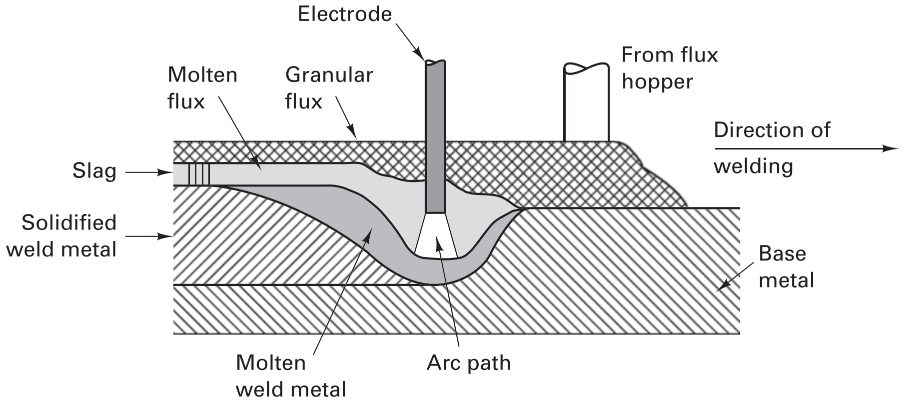

FIGURE 31-15 (Top) Basic features of submerged arc welding (SAW). *(Courtesy of Linde Division, Union Carbide Corporation, Houston, TX)* (Bottom) Cutaway schematic of submerged arc welding. *(Courtesy of American Iron and Steel Institute, Washington, DC.)*

shielding. The molten flux solidifies into a glasslike covering over the weld. This layer, along with the flux that is not melted, provides good thermal insulation. The slow cooling of the weld metal helps to produce soft, ductile welds. Upon further cooling, the solidified flux cracks loose from the weld (due to the differential thermal contraction) and is easily removed. The unmelted granular flux is recovered by a vacuum system and reused.

Submerged arc welding is most suitable for making flat-butt or fillet welds in low-carbon steels (0.3% carbon). With some preheat and postheat precautions, medium-carbon and alloy steels and some cast irons, stainless steels, copper alloys, and nickel alloys can also be welded. The process is not recommended for high-carbon steels, tool steels, aluminum, magnesium, titanium, lead, or zinc. The reasons for this incompatibility are somewhat varied, including the unavailability of suitable fluxes, reactivity at high temperatures, and low sublimation temperatures.

Because the arc is totally submerged, high welding currents can be used (600 to 2000 A). High welding speeds, high deposition rates, deep penetration, and high cleanliness (due to the flux action) are all characteristic of submerged arc welding. A welding speed of 0.75 m/min in 2.5-cm-thick steel plate is typical. Single-pass welds can be made with penetrations up to 2.5 cm (1.0 in.), and greater thicknesses can be joined by multiple passes. Because the metal is deposited in fewer passes than with alternative processes, there is less possibility of entrapped slag or voids, and weld quality is further enhanced. For even higher deposition rates, multiple electrode wires can be employed.

Limitations to the process include the need for extensive flux handling, possible contamination of the flux by moisture (leading to porosity in the weld), the large volume of slag that must be removed, and shrinkage problems due to the large weld pool. The high heat inputs can produce large grain size structures, and the slow cooling rate

TABLE 31-6 Process Summary: Submerged Arc Welding (SAW)

Heat source	Electric arc
Protection	Granular flux provides slag and an isolation blanket
Electrode	Continuous, consumable
Material joined	Best for steel
Rate of heat input	Medium
Weld profile (D/W)	1
Current	<1000 amps
Max. penetration	25 mm
Assets	High-quality welds, high deposition rates
Limitations	Requires slag removal, difficult for overhead and out-of-position welding, joints often require backing plates

may enable segregation and possible hydrogen or hot cracking. Welding is restricted to the horizontal position, since the flux and slag are held in place by gravity. In addition, chemical control is quite important, since the electrode material often contributes over 70% of the molten weld region.

The electrodes are generally classified by composition and are available in diameters ranging from 1 to 10 mm (0.045 to $^3/_8$ in.). The larger electrodes can carry higher currents and enable more rapid deposition, but penetration is shallower. The welding of alloy steels can be performed in several ways: solid wire electrodes of the desired alloy, plain-carbon electrodes with the alloy additions being incorporated into the flux, or tubular metal electrodes with the alloy additions in the hollow core. Various fluxes are also available and are selected for compatibility with the weld metal. All are designed to have low melting temperatures, good fluidity, and brittleness after cooling.

In a modification of the submerged arc process known as *bulk welding*, iron powder is first deposited into the joint (ahead of the flux) as a means of increasing deposition rate. A single weld pass can then produce enough filler metal to be equivalent to seven or eight conventional submerged arc passes.

Table 31-6 provides a summary of the submerged arc welding process.

STUD WELDING

Stud welding (SW) is an arc-welding process used to attach studs, screws, pins, or other fasteners to a metal surface. A special gun is used, such as the one shown in Figure 31-16. The inserted stud acts as an electrode, and a DC arc is established between the end of

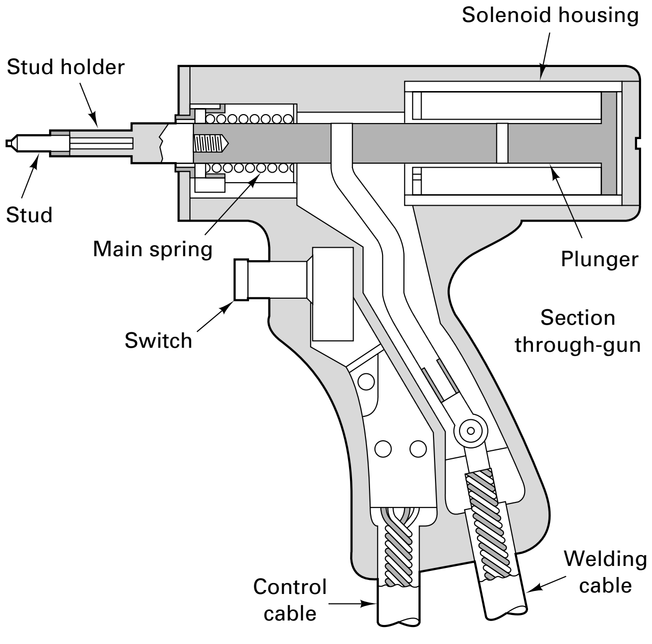

FIGURE 31-16 Diagram of a stud welding gun. *(Courtesy of American Machinist.)*

FIGURE 31-17 (Left) Types of studs used for stud welding. (Center) Stud and ceramic ferrule. (Right) Stud after welding and a section through a welded stud. *(Courtesy of Nelson Stud Welding Co, Elyria, OH)*

the stud and the workpiece. After a small amount of metal is melted, the two pieces are brought together under light pressure and allowed to solidify. Automatic equipment controls the arc, its duration, and the application of pressure to the stud.

Figure 31-17 shows some of the wide variety of studs that are specially made for this process. Many contain a recessed end that is filled with flux. A ceramic ferrule, such as the one shown in the center photo of Figure 31-17, may be placed over the end of the stud before it is positioned in the gun. During the arc, the ferrule serves to concentrate the heat and isolate the hot metal from the atmosphere. It also confines the molten or softened metal and shapes it around the base of the stud, as shown in the photo on the right of Figure 31-17. After the weld has cooled, the brittle ceramic is broken free and removed. Since burn-off or melting reduces the length of the stud, the original dimensions should be selected to compensate.

Stud welding requires almost no skill on the part of the operator. Once the stud and ferrule are placed in the gun and the gun positioned on the work, all the operator has to do is pull the trigger. The cycle is executed automatically and takes less than one second. Thus the process is well suited to manufacturing and can be used to eliminate the drilling and tapping of many special holes. Production-type stud welders can produce over 1000 welds per hour.

■ 31.6 NONCONSUMABLE-ELECTRODE ARC WELDING

GAS TUNGSTEN ARC WELDING

Gas tungsten arc welding (GTAW) was formerly known as tungsten inert-gas (TIG) welding, or Heliarc welding when helium was the shielding gas. A nonconsumable tungsten electrode provides the arc but not the filler metal. Inert gas (argon, helium, or a mixture of them) flows through the electrode holder to provide a protective shield around the electrode, the arc, the pool of molten metal, and the adjacent heated areas. (*Note:* CO_2 cannot be used in this process since it provides inadequate protection for the hot tungsten electrode.) While argon is the most widely used gas, and produces a smoother, more stable arc, helium may be added to increase the heat input (higher welding speeds and deeper penetration). Helium alone may be preferred for overhead welding since it is lighter than air and flows upward.

The composition, diameter, length, and tip geometry (balled, pointed, or truncated cone) of the tungsten or tungsten-alloy electrode are selected based on the material being welded, the thickness of the material, and the type of current being used. The

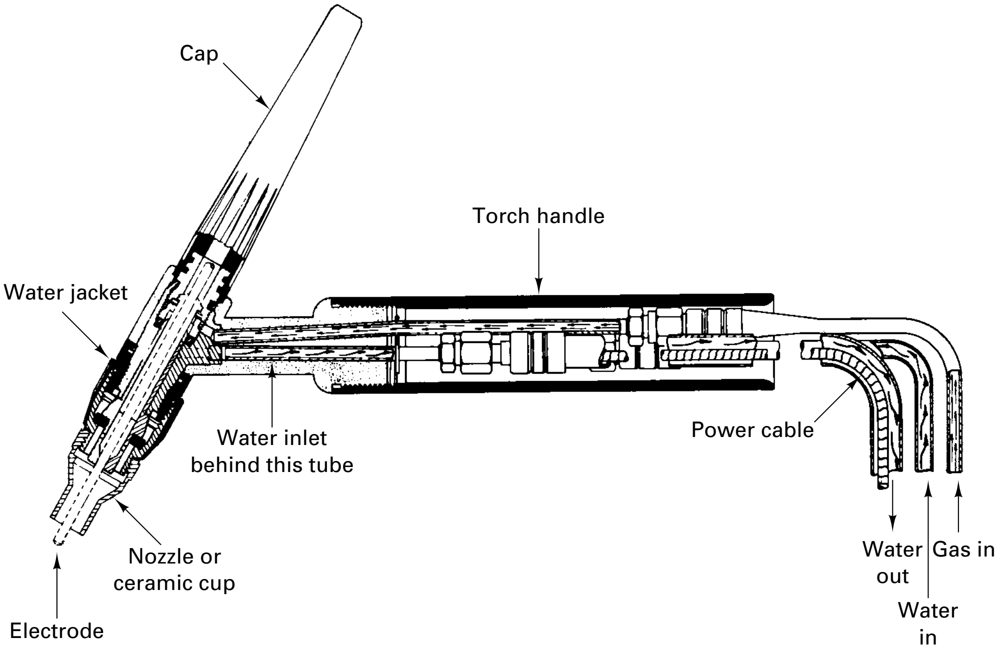

FIGURE 31-18 Welding torch used in nonconsumable-electrode, gas tungsten arc welding (GTAW), showing feed lines for power, cooling water, and inert-gas flow. *(Courtesy of Linde Division, Union Carbide Corporation, Houston, TX)*

tungsten is often alloyed with thorium oxide, zirconium oxide, cerium oxide, or lanthanum oxide to provide better current-carrying and electron-emission characteristics and longer electrode life. Since tungsten is not consumed at the temperatures of the arc, the arc length remains constant, and the arc is very stable and easy to maintain. Figure 31-18 shows a typical GTAW torch with cables and passages for gas flow, power, and cooling water.

In applications where there is a close fit between the pieces being joined, no filler metal may be needed. When filler metal is required, it is usually supplied as a separate rod, about a meter (3 ft) long and in various diameters, as illustrated in Figure 31-19. The filler metal is generally selected to match the chemistry and/or tensile strength of the metal being welded. When high deposition rates are desired, a separate resistance heating circuit can be provided to preheat the filler wire. As shown in Figure 31-20, the deposition rate of heated wire can be several times that of a cold wire. By oscillating the filler wire from side to side while making a weld pass, the deposition rate can be further increased. The hot-wire process is not practical when welding copper or aluminum, however, because it is difficult to preheat the low-resistivity filler wire.

With skilled operators, gas tungsten arc welding can produce high-quality welds that are very clean and scarcely visible. Since no flux is employed, no special cleaning or slag removal is required. However, the surfaces to be welded must be clean and free

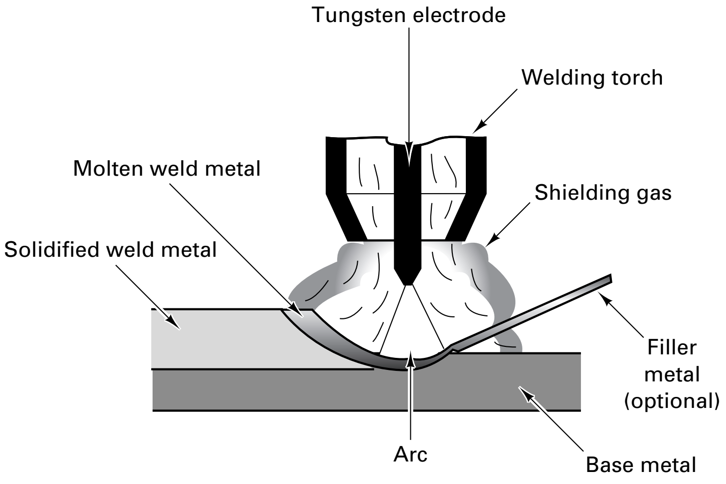

FIGURE 31-19 Diagram of gas tungsten arc welding (GTAW). *(Courtesy of American Iron and Steel Institute, Washington, DC.)*

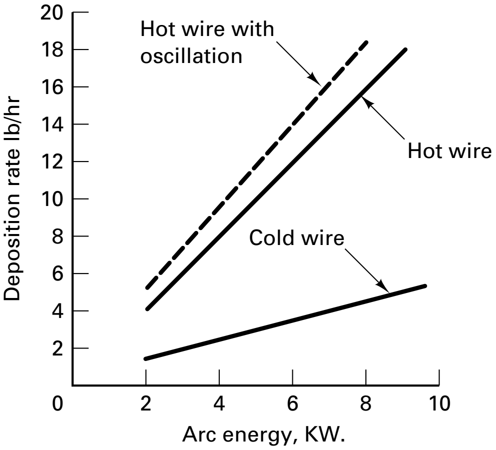

FIGURE 31-20 Comparison of the metal deposition rates in GTAW with cold, hot, and oscillating-hot filler wire. (*Courtesy of* Welding Journal.)

of oil, grease, paint, and rust, because the inert gas does not provide any cleaning or fluxing action. It is also important to control the arc length throughout the process. Since the arc is somewhat bell-shaped, decreasing the standoff distance will decrease the melt and heat-affected widths on the workpiece. However, if the hot tungsten electrode comes into contact with the workpiece or molten pool, it will contaminate the electrode.

All metals and alloys can be welded by this process, and the use of inert gas makes it particularly attractive for the reactive metals, such as aluminum, magnesium, and titanium, as well as the high-temperature refractory metals. Maximum penetration is obtained with direct-current electrode-negative (DCEN) conditions, although alternating current may be specified to break up surface oxides (as when welding aluminum). DCEP or reverse-polarity conditions are used only when welding thin pieces where shallow penetrations are desired. Weld currents should be kept low, since this mode tends to melt the tungsten electrode. Weld voltage is typically 20 to 40 volts, and weld current varies from less than 125 amps for DCEP to 1000 amps for DCEN. A high-frequency, high-voltage, alternating current is often superimposed on the regular AC or DC welding current to make it easier to start and maintain the arc. The pulsed arc gas tungsten arc welding (GTAW-P) modification offers all of the advantages previously cited for pulsed gas metal arc welding, including the ability to weld thinner materials due to the lower heat input and lower temperatures.

GTAW costs more than SMAW and is slower than GMAW. However, it produces a high-quality weld in a very wide range of thicknesses, positions, and geometries. The process has a medium rate of heat input, and the welds have a depth that is approximately equal to the width. The materials being welded are generally thinner than 6.5 mm ($^1/_4$ in.). Table 31-7 provides a process summary.

TABLE 31-7 Process Summary: Gas Tungsten Arc Welding (GTAW)

Heat source	Electric arc
Protection	Externally supplied shielding gas
Electrode	Nonconsumable
Material joined	All common metals
Rate of heat input	Medium
Weld profile (D/W)	1
Current	<500 amps
Max. penetration	3 mm
Assets	High-quality welds, no slag to be removed
Limitations	Slower than consumable electrode GMAW

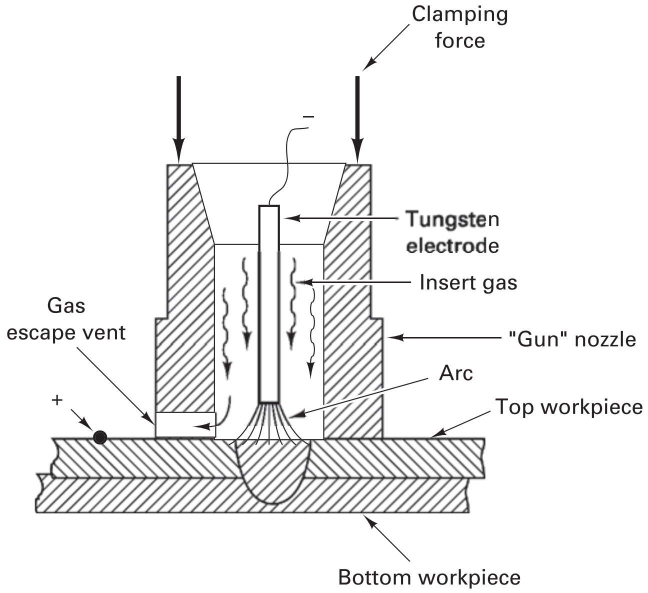

FIGURE 31-21 Process schematic of spot welding by the inert-gas-shielded tungsten arc process.

GAS TUNGSTEN ARC SPOT WELDING

A variation of gas tungsten arc welding can be used to produce *spot welds* between two pieces of metal where access is limited to one side of the joint or where thin sheet is being attached to heavier material. The basic procedure is illustrated in Figures 31-21 and 31-22. A modified tungsten inert-gas gun is used with a vented nozzle on the end. The nozzle is pressed firmly against the material, holding the pieces in reasonably good contact. (The workpieces must be sufficiently rigid to sustain the contact pressure.) Inert gas, usually argon or helium, flows through the nozzle to provide a shielding atmosphere. Automatic controls then advance the electrode to initiate the arc and retract it to the correct distance for stabilized arcing. The duration of arcing is timed automatically to produce an acceptable spot weld. The depth and size of the weld nugget are controlled by the amperage, time, and type of shielding gas.

In arc spot welding, the weld nugget begins to form at the surface where the gun makes contact. This is in contrast to the more standard resistance spot-welding methods, where the weld nugget forms at the interface between the two members. Each technique has its characteristic advantages and disadvantages.

FIGURE 31-22 Making a spot weld by the inert-gas-shielded tungsten arc process. *(Courtesy of Air Reduction Company Inc., New York, NY)*

PLASMA ARC WELDING

In *plasma arc welding (PAW)* the arc is maintained between a nonconsumable electrode and either the welding gun (*nontransferred arc*) or the workpiece (*transferred arc*), as illustrated in Figure 31-23. The nonconsumable tungsten electrode is set back within the "torch" in such a way as to force the arc to pass through or be contained within a small-diameter nozzle. An inert gas (usually argon) is forced through this constricted arc, where it is heated to a high temperature and forms a hot, fast-moving *plasma*. The emerging gas then transfers its heat to the workpiece and melts the metal. This flow is called the *orifice gas*. A second flow of inert gas surrounds the plasma column and provides shielding to the weld pool. When filler metal is needed, it is provided by an external feed.

Figure 31-24 presents a comparison of the nonconstricted arc of the GTAW process and the constricted arc of plasma arc welding, and shows the differences in temperature distribution. Plasma arc welding is characterized by a high rate of heat input and temperatures on the order of 16,500°C (30,000°F). This in turn offers fast welding speeds, narrow welds with deep penetration (a depth-to-width ratio of about 3), a narrow heat-affected zone, reduced distortion, and a process that is insensitive to variations in arc length since the plasma column is cylindrical. Welds can be made in all positions, and nearly all metals and alloys can be welded.

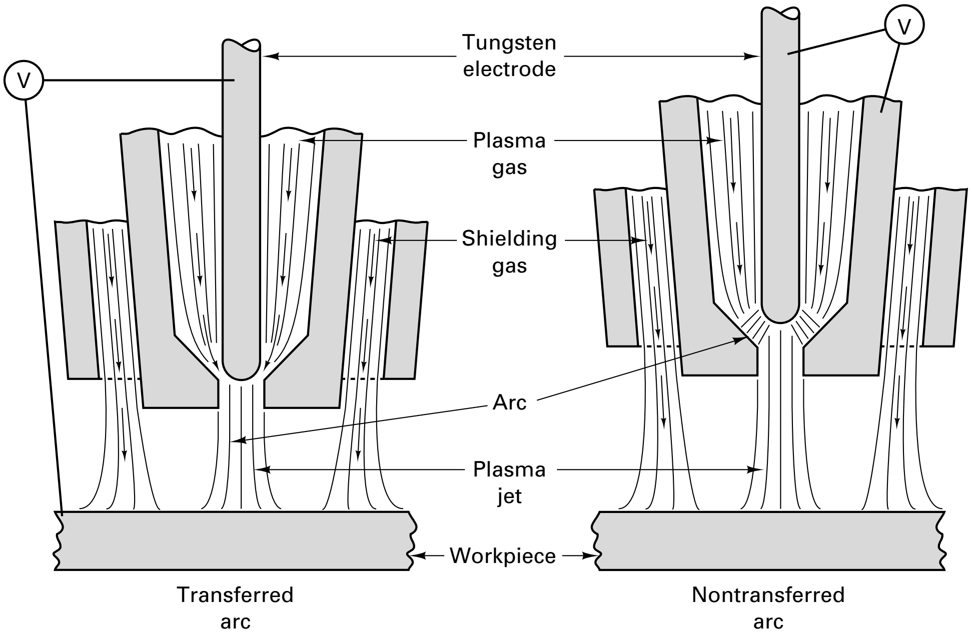

FIGURE 31-23 Two types of plasma arc torches. (Left) Transferred arc; (right) nontransferred arc.

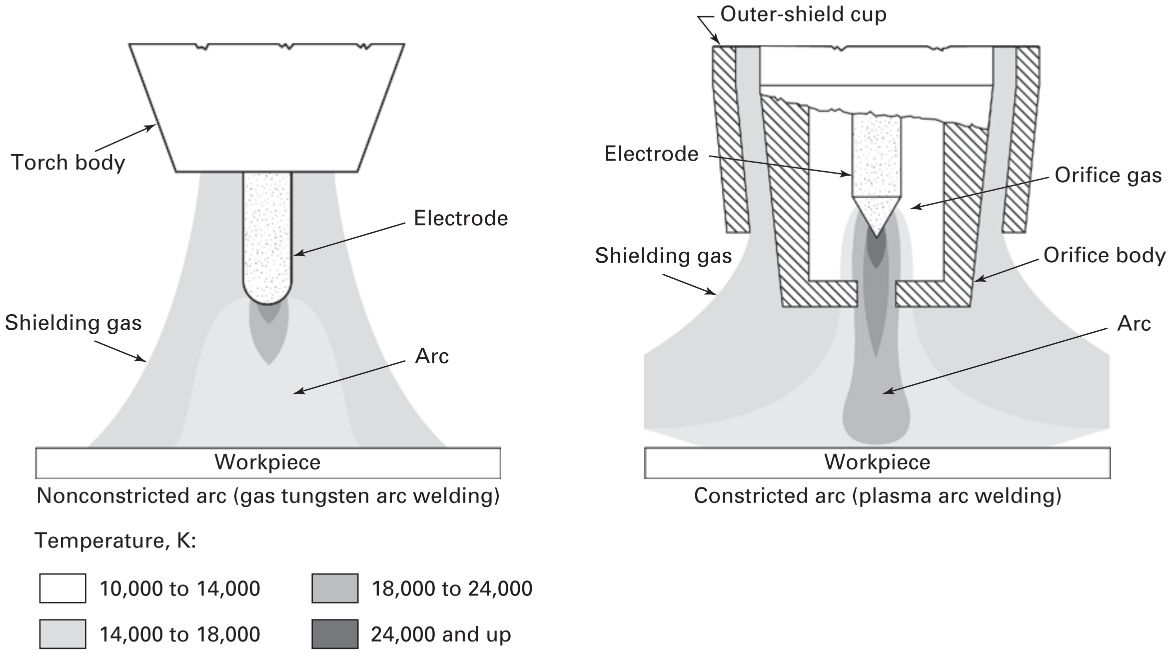

FIGURE 31-24 Comparison of the nonconstricted arc of gas tungsten arc welding and the constricted arc of the plasma arc process. Note the level and distribution of temperature. *(Courtesy ASM International, Materials Park, OH.)*

With a low-pressure plasma and currents between 20 and 100 amps, the metal simply melts and flows into the joint. At higher pressures and currents in excess of 100 amps, a "keyhole" effect occurs in which the plasma gas creates a hole completely through the sheet (up to 20 mm thick) that is surrounded by molten metal. As the torch is moved, liquid metal flows to fill the keyhole. If the gas pressure is increased even further, the molten metal is expelled from the region and the process becomes one of plasma cutting, which is discussed later in this chapter.

Many plasma torches employ a small, nontransferred arc within the torch to heat the orifice gas and ionize it. The ionized gas then forms a good conductive path for the main transferred arc. This dual-arc technique permits instant ignition of a low-current

TABLE 31-8 Process Summary: Plasma Arc Welding (PAW)

Heat source	Plasma arc
Protection	Externally supplied shielding gas
Electrode	Nonconsumable
Material joined	All common metals
Rate of heat input	High
Weld profile (D/W)	3
Current	<500 amps
Max. penetration	12–18 mm
Assets	Can have long arc length
Limitations	High initial equipment cost, large torches may limit accessibility

arc, which is more stable than that of an ordinary plasma torch. Separate DC power supplies are used for the pilot and main arcs. Microplasma, or needle arc, torches can operate with very low currents (0.1 to 20 A) and still produce stable arcs. They are quite useful for welding very thin sheet.

Table 31-8 provides a process summary for plasma arc welding.

31.7 WELDING EQUIPMENT

POWER SOURCES FOR ARC WELDING

Arc welding requires large electrical currents, often in the range of 100 to 1000 amps. The voltage is usually between 20 and 50 volts. Both DC and AC *power supplies* are available and generally employ the "drooping-voltage" characteristics shown in Figure 31-25. These characteristics are designed to minimize changes in welding current as the welding voltage fluctuates within anticipated limits.

In the past, most direct current units were gasoline- or diesel-powered motor-generator sets, and these are still used when welding is to be performed in remote locations. Most welding today, however, uses solid-state transformer-rectifier machines, such as the one shown in Figure 31-26. Operating on a three-phase electrical line, these machines can usually provide both AC and DC output.

If only AC welding is to be performed, relatively simple transformer-type power supplies can be used. These are usually single-phase devices with low power factors. When multiple machines are to be operated, as in a production shop, they are often connected to the various phases of a three-phase supply to help balance the load.

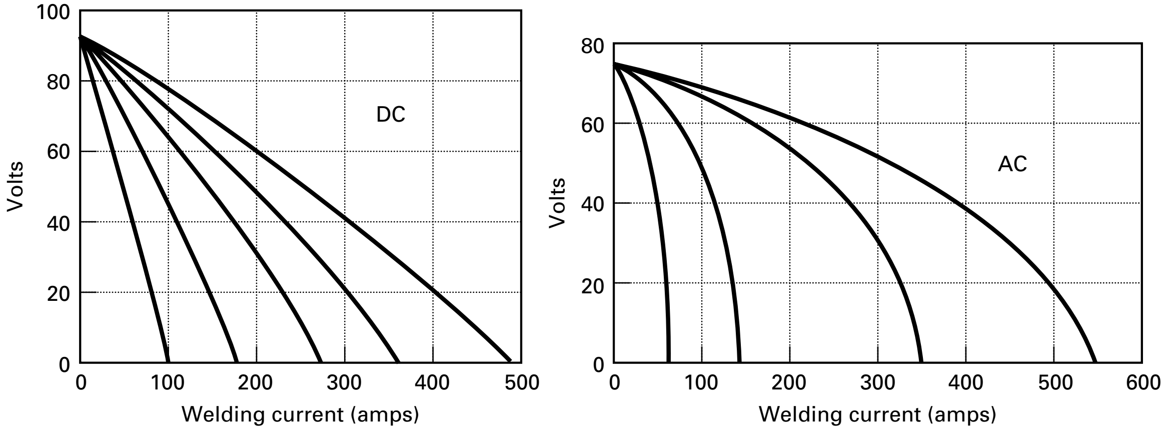

FIGURE 31-25 Drooping-voltage characteristics of typical arc-welding power supplies. (Left) Direct current; (right) alternating current.

FIGURE 31-26 Rectifier-type AC and DC welding power supply. *(Courtesy of Lincoln Electric Company, Cleveland, OH)*

Inverter-based power supplies, introduced in the 1980s, provide great flexibility. Through solid-state electronics, these AC machines can quickly modify the shape and frequency of the pulse waveform or momentarily change the power output. The square-wave technology currently being employed provides improved arc starts and more stable arcs. The percent of time in electrode negative or electrode positive can be adjusted, and output frequency can be varied from 20 to 250 Hz. Through feedback and logic control, the power supply can actually adjust to compensate for changes in a number of process variables.

JIGS, POSITIONERS, AND ROBOTS

Jigs or fixtures (also called *positioners*) are frequently used to hold the work in production welding. By positioning and manipulating the workpiece, the welding operations can often be performed in a more favorable orientation. Parts can also be mounted on numerically controlled (NC) tables that position them with respect to the welding tool.

Industrial robots have replaced humans for many welding applications. They can operate in hostile environments and are capable of producing high-quality welds in a repetitive mode.

31.8 ARC CUTTING

While oxygen torch cutting has been discussed earlier in this chapter, and laser cutting will be covered in a future chapter, there are a number of arc-cutting methods. Virtually all metals can be cut by some form of electric arc. In these processes the material is melted by the intense heat of the arc and then permitted, or forced, to flow away from the region of the slit or notch (*kerf*). Most of the techniques are simply adaptations of the arc-welding procedures discussed in this chapter. Each has its inherent characteristics and capabilities, including tolerance, thickness capability, kerf width, edge squareness, size of the heat-affected zone, and cost. Selection depends upon factors such as tolerance requirements, the subsequent processes that will be performed on the cut part, and the end use of the product.

CARBON ARC AND SHIELDED METAL ARC CUTTING

The carbon arc cutting (CAC) and shielded metal arc cutting (SMAC) methods use the arc from a carbon or shielded metal arc electrode to melt the metal, which is then removed from the cut by gravity or the force of the arc itself. These processes are generally limited to small shops, garages, and homes, where there is limited investment in equipment.

AIR CARBON ARC CUTTING

In air carbon arc cutting, the arc is again maintained between a carbon electrode and the workpiece, but high-velocity jets of air are directed at the molten metal from holes in the electrode holder. While there is some oxidation, the primary function of the air is to blow the molten material from the cut. Air carbon arc cutting is particularly effective for cutting cast iron and preparing steel plates for welding. Speeds up to 0.6 m/min are possible, but the process is quite noisy, and hot metal particles tend to be blown over a substantial area.

OXYGEN ARC CUTTING

In oxygen arc cutting (AOC), an electric arc and a stream of oxygen are combined to make the cut. The electrode is a coated ferrous-metal tube. The coated metal serves to establish a stable arc, while oxygen flows through the bore and is directed on the area of incandescence. With easily oxidized metals, such as steel, the arc preheats the base metal, which then reacts with oxygen, becomes liquefied, and is expelled by the oxygen stream.

GAS METAL ARC CUTTING

If the wire feed rate and other variables of gas metal arc welding (GMAW) are adjusted so that the electrode penetrates completely through the workpiece, cutting rather than welding will occur, and the process becomes gas metal arc cutting (GMAC). The wire feed rate controls the quality of the cut, and the voltage determines the width of the slit or kerf.

GAS TUNGSTEN ARC CUTTING

Gas tungsten arc cutting (GTAC) employs the same basic circuit and shielding gas as used in gas tungsten arc welding, with a high-velocity jet of gas added to expel the molten metal.

PLASMA ARC CUTTING

The torches used in plasma arc cutting (PAC) produce the highest temperatures available from any practical source. With the nontransferred type of torch, the arc column is completely within the nozzle, and a temperature of about 16,500°C (30,000°F) is obtained. With the transfer-type torch, the arc is maintained between the electrode and the workpiece, and temperatures can be as high as 33,000°C (60,000°F). Ionized gases flowing at these temperatures and near supersonic speeds are capable of cutting virtually any electrically conductive material simply by melting it and blowing it away from the cut.

Early efforts to employ this technique showed that the speed, versatility, and operating cost were far superior to those of the oxyfuel cutting methods. However, the early systems could not constrict the arc sufficiently to produce the quality of cut needed to meet the demands of manufacturing. Therefore, plasma arc cutting was generally limited to those materials that could not be cut by the oxidation type of cutting

FIGURE 31-27 Cutting sheet metal with a plasma torch. *(Courtesy of GTE Sylvania, Danvers, MA)*

techniques. In the 1970s radial impingement of water on the arc was found to produce the desired constriction. It provides an intense, highly focused source of heat, and water-injected torches can now cut virtually any metal in any position. Magnetic fields have also been used to constrict the arc and can produce high-quality cuts without the need for water impingement.

Compared to oxyfuel cutting, plasma cutting is more economical (cost per cut is a fraction of oxyfuel), more versatile (can cut all metals as easily as mild steel), and much faster (typically, five to eight times faster than oxyfuel). Cutting speeds up to 7.5 m/min have been obtained in 6-mm-thick aluminum and up to 2.5 m/min in 12.5-mm-thick steel. The combination of the extremely high temperatures and jetlike action of the plasma produces narrow kerfs and remarkably smooth surfaces, nearly as smooth as can be obtained by sawing. Plasma-cut surfaces are often within 2° of vertical, and surface oxidation is nearly eliminated by the cooling effect of the water spray. In addition, the heat-affected zone in the metal is only one-third to one-fourth as large as that produced by oxyfuel cutting, and a preheat cycle is not required in the cutting of steel. Heat-related distortion is extremely small.

Transferred-arc torches are usually used for cutting metals, while the nontransferred type are employed with the low-conductivity nonmetals. Ordinary air or inexpensive nitrogen can be used as the plasma gas for the cutting of all types of metal. Oxygen plasma systems were introduced in the 1980s and are used on carbon and low-alloy steel products with thicknesses ranging from 2 to 32 mm (up to $1^1/_4$ in.). When cutting thick sections (greater than 12 mm), an argon–hydrogen mixture may be preferred to provide a deeper-penetrating arc. A secondary flow of shielding gas (nitrogen, air, or carbon dioxide) may be used to help cool the torch, blow the molten metal away, shield the arc, and prevent oxidation of the cut surface. The arc-constricting water flow can also serve as a shielding medium.

During the 1990s *high-density*, or *precision plasma*, systems began to appear. Various designs are used to restrict the orifice (i.e., superconstrict the plasma), producing vertical edges (less than 1° taper), close tolerances ($^1/_3$ that of conventional), and dross-free plasma cutting of thin materials. The lower-amperage torches (10 to 100 amps) are limited to cutting carbon and low-alloy steels less than 16 mm ($^5/_8$ in.) thick and higher-performance metals (such as stainless and high-strength steels, nickel alloys, titanium, and aluminum) less than 12 mm ($^1/_2$ in.) thick. In addition, the cutting speeds are slower than conventional plasma cutting, but there is no reduction in the size of the heat-affected zone. *Pulsed plasma arc cutting*, another recent development, can reduce heat input to the workpiece while producing kerfs that are 50% narrower and cleaner edges on the cuts.

Combining a plasma torch with CNC manipulation can provide fast, clean, and accurate cutting, like that shown in Figure 31-27. In this process, the cutting table may be placed underwater as a means of reducing noise, air pollution, dust, and arc glare (dyes are placed in the water). Plasma arc torches can also be incorporated into punch presses to provide a manufacturing machine with outstanding flexibility in producing cut and punched products from a variety of materials.

Plasma arc cutting is also suitable for robot application. A single robot system can be used for both cutting and welding of intricate shapes and contours. Water constriction of the manipulated arc is a problem, however, making it important to select the right process parameters and type of gas for the particular application.

Table 31-9 compares the features of oxyfuel cutting, plasma arc cutting, and laser cutting.

31.9 METALLURGICAL AND HEAT EFFECTS IN THERMAL CUTTING

When used for cutting, the flame and arc processes expose materials to high localized temperatures and can produce harmful metallurgical effects. If the cut edges will be subsequently welded, or if they will be removed by machining, there is little cause for concern. When the edges are retained in the finished product, consideration should be given to the effects of cutting heat and their interaction with the applied loads. In some cases, additional steps may be required to avoid or overcome harmful consequences.

TABLE 31-9 Cutting Process Comparison: Oxyfuel, Plasma Arc, and Laser

Feature	Oxyfuel Cutting	Plasma Arc Cutting	Laser Cutting
Preferred materials	Carbon steel and titanium	All electrically conductive metals	Metal, plastic, wood, textiles
Quality of cut	Average	Similar to oxyfuel Almost as good as laser on thin material	Good quality—best for plate material less than $^{1}/_{2}$-inch thick
Thickness range			
1. Steel	3/16 inch to unlimited	26 ga. to 3 inch	Foil to 1 inch
2. Stainless	not used	26 ga. to 5 inch	20 ga. to $^{3}/_{4}$ inch
3. Aluminum	not used	22 ga. to 6 inch	20 ga. to $^{3}/_{4}$ inch
Cutting speed or time	Long preheat is required	Fast cutting	Slower than plasma, but faster than oxyfuel

For carbon steels with less than 0.25% carbon, thermal cutting does not produce serious metallurgical effects. However, in steels of higher carbon content, the metallurgical changes can be quite significant, and preheating and/or postheating may be required. For alloy steels, additional consideration should be given to the effects of the various alloy elements.

Because of the low rate of heat input, oxyacetylene cutting will produce a rather large *heat-affected zone*. The arc-cutting methods produce intermediate effects that are quite similar to those of arc welding. Plasma arc cutting is so rapid, and the heat is so localized, that the original properties of a metal are only modified within 1.5 mm of the cut.

All of the thermal cutting processes produce some *residual stresses*, with the cut surface generally in tension. Except in the case of thin sheet, warping should not occur. However, if subsequent machining removes only a portion of the cut surface, or does not penetrate to a sufficient depth, the resulting imbalance in residual stresses can induce distortion. It may be necessary to remove all cut surfaces to a substantial depth to ensure good dimensional stability.

Thermal cutting can also introduce geometrical features into the edge. All flame- or arc-cut edges are rough to varying degrees and thus contain notches that can act as stress raisers and reduce the endurance or fracture strength. If cut edges are to be subjected to high or repeated tensile stresses, the cut surfaces and the heat-affected zone should be removed by machining or at least subjected to a stress-relief heat treatment.

■ Key Words

acetylene
alternating current
arc
arc cutting
arc welding
bulk welding
carburizing flame
consumable-electrode process
DCEN
DCEP
electrode
filler metal
flame straightening
flux
flux-cored arc welding
fusion welding
gas metal arc welding
gas tungsten arc welding
globular transfer
heat-affected zone
jig
kerf
MAPP
neutral flame
nonconsumable-electrode process
nontransferred arc
orifice gas
oxidizing flame
oxyfuel-gas cutting
oxyfuel-gas welding
oxygen lance cutting
penetration
plasma
plasma arc welding
positioner
power supply
pulsed arc
pulsed spray transfer
residual stresses
reverse polarity
shielded metal arc welding
short-circuit transfer
slag
spot weld
spray transfer
stack cutting
straight polarity
stud welding
submerged arc welding
thermal cutting
torch
transferred arc
upsetting
variable polarity

■ Review Questions

1. Why does an oxyfuel-gas welding torch usually have a flame with two distinct regions?
2. What is the location of the maximum temperature in an oxyacetylene flame?
3. What function or functions are performed by the outer zone of the welding flame?
4. What three types of flames can be produced by varying the oxygen–fuel ratio?
5. Which type of oxyfuel flame is most commonly used?
6. What are some of the attractive features of MAPP gas?
7. Why might a welder want to change the tip size (or orifice diameter) in an oxyacetylene torch?
8. What is filler metal, and why might it be needed to produce a joint?
9. What is the role of a welding flux?
10. Oxyfuel-gas welding has a low rate of heat input. What are some of the adverse features that result from the slow rate of heating?
11. What are some of the more attractive features of the oxyfuel-gas process?
12. How does pressure gas welding differ from the oxyfuel-gas process?
13. In what way does the torch cutting of ferrous metals differ from cutting nonoxidizing metals?
14. Why might it be possible to use only an oxygen lance to cut hot steel strands as they emerge from a continuous casting operation?
15. How does an oxyacetylene cutting torch differ from an oxyacetylene welding torch?
16. What are some of the ways in which cutting torches can be manipulated?
17. What modification must be incorporated into a cutting torch to permit it to cut metal underwater?
18. If a curved plate is to be straightened by flame straightening, should the heat be applied to the longer or shorter surface of the arc? Why?
19. Why does the flame-straightening process not work for thin sheets of metal?
20. What sorts of problems plagued early attempts to develop arc welding?
21. What are the three basic types of current and polarity that are used in arc welding?
22. What is the difference between a consumable and nonconsumable electrode? For which processes does a filler metal have to be added by a separate mechanism?
23. What are the three types of metal transfer that can occur during arc welding?
24. What are some of the process variables that must be specified when setting up an arc-welding process?
25. What are the four primary consumable electrode arc-welding processes?
26. What are some general properties of the consumable-electrode arc-welding processes?
27. What are some of the functions of the electrode coatings used in shielded metal arc welding?
28. How are welding electrodes commonly classified, and what information does the designation usually provide?
29. Why are shielded metal arc electrodes often baked just prior to welding?
30. What is the function of the slag coating that forms over a shielded metal arc weld?
31. What benefit can be obtained by placing iron powder in the coating of shielded metal arc electrodes that will be used to weld ferrous metals?
32. Why are shielded metal arc electrodes generally limited in length, forcing the process to be one of intermittent operation?
33. Why is the shielded metal arc-welding process limited to low welding currents and shallow penetration?
34. What are some of the attractive features of the shielded metal arc-welding process?
35. What is the advantage of placing the flux in the center of an electrode (flux-cored arc welding) as opposed to a coating on the outside (shielded metal arc welding)?
36. What feature enables the welding current in FCAW to be higher than in SMAW?
37. What are some of the advantages of gas metal arc welding compared to the shielded metal arc process?
38. Describe the relative performance of argon, helium, and carbon dioxide gases in creating a high-temperature arc and promoting weld penetration.
39. Which of the metal transfer mechanisms is most used in arc welding?
40. Describe the metal transfer that occurs during pulsed arc gas metal arc welding.
41. What are some of the benefits that can be obtained by the reduced heating of the pulsed arc process?
42. What are some of the primary process variables in the gas metal arc-welding process?
43. What benefits can be gained by using a rectangular cross-section electrode wire as opposed to a round one?
44. What are some of the functions of the flux in submerged arc welding?
45. What are some of the attractive features of submerged arc welding? Major limitations?
46. What is the primary goal or objective in bulk welding?
47. What is the primary objective of stud welding?
48. What is the function of the ceramic ferrule placed over the end of the stud in stud welding?
49. What is the current (or proper) designation for MIG welding? TIG welding? Heliarc welding?
50. What types of shielding gases are used in the gas tungsten arc process?
51. What can be done to increase the rate of filler metal deposition during gas tungsten arc welding?
52. What are some of the attractive features of gas tungsten arc welding?
53. How are the spot welds produced by gas tungsten arc spot welding different from those made by conventional resistance spot welding?
54. How is the heating of the workpiece during plasma arc welding different from the heating in other arc-welding techniques?
55. What are the two different gas flows in plasma arc welding?
56. What are some of the attractive features of plasma arc welding?
57. What is the primary difference between plasma arc welding and plasma arc cutting?
58. What are the attractive features or benefits of an inverter-based power supply?
59. What is the kerf in thermal cutting operations?
60. What is the purpose of the oxygen in oxygen arc cutting?

61. Why is plasma arc cutting an attractive way of cutting high-melting-point materials?
62. What techniques can be used to constrict the arc in plasma arc cutting, producing a narrower, more controlled cut?
63. Compared to oxyfuel cutting, what are some of the attractive features of the plasma technique?
64. Describe the relative size of the heat-affected zone for the various cutting processes: oxyfuel, arc, and plasma.
65. Why might the residual stresses induced during cutting operations be objectionable?
66. Why might it be wise to machine away the thermally cut edge and heat-affected zone of metal that will be used as a stressed machine part?

www.wiley.com/college/degarmo

Chapter 31 CASE STUDY

Bicycle Frame Construction and Repair

As a new employee in a bicycle shop, you learn that customers will frequently seek advice regarding various types of bicycle repair. Bent or broken frames appear to be a common problem, and you learn that inexpensive bicycles generally have frames made from welded low-carbon steel tubing. This material can be heated to straighten and is easily repair welded using a wide variety of welding techniques. As you move to the more costly lightweight or high-performance models, you learn that repair is generally not quite as simple.

a. In one case, the frame of a high-quality, lightweight bicycle had been fabricated from aluminum-alloy tubing, with joints made by adhesive bonding of the tubes to connectors that incorporate either internal lugs or external sleeves. When the frame fractured near one of the joints, the owner contacted a local auto body shop and requested that a repair be made using conventional gas tungsten arc welding. The welder was familiar with the welding of aluminum, and the repair seemed to be of good quality. Shortly thereafter, however, the frame broke again. This time the fracture was adjacent to the repair weld and the characteristics of the break were different. While the first fracture was somewhat brittle in nature, the second appeared to be more ductile, with evidence of metal flow prior to fracture. Since the second fracture occurred in the tube material, not the weld itself, the welder felt that the failure was not related to the attempted repair and that the material in the tubing must be defective.
   1. If the material had been cold-drawn aluminum tubing (i.e., strain hardened), explain what may have occurred during the repair. What is the probable cause of the second fracture? Was the weld in any way defective? Was the second failure related to the welding repair?
   2. If the tubing had been strengthened by an age-hardening heat treatment, could the same results have occurred? Explain.
   3. Is there a better means of repairing the original fracture? What would have been your recommendation?

b. Titanium offers the strength of heat-treated steel at approximately half of the weight. Magnesium, while not as strong as steel or aluminum, is the lightest-weight engineering metal. Would these materials be appropriate for bicycle frame construction? If so, how would they be assembled?

c. If the bicycle frame deflects, motion of the cyclist and related energy are wasted. Therefore, a rigid frame is quite desirable. Beryllium is an extremely rigid, lightweight metal. Could it be used as a material for bicycle frames? How would you fabricate the tubing and assemble the frame?

d. Composite materials can be used to produce tailored sets of properties. Fiber-reinforced composites can have extremely high rigidity in the direction of fiber orientation, coupled with extremely light weight. If you were to assemble a composite frame using fiber-reinforced tubing, such as graphite fiber-reinforced epoxy, how would you join the assembly?

e. Premium-quality racing bikes (such as Tour De France models) have used one-piece carbon-fiber composite frames (i.e. no joints at all!). What is the benefit of such a design?

CHAPTER 32

RESISTANCE AND SOLID-STATE WELDING PROCESSES

32.1 INTRODUCTION

As indicated in the lists of Figures 30-1 and 30-2, there are a number of welding and cutting processes that utilize heat sources other than oxyfuel flames and electric arcs, and some use no heat source at all. We begin this chapter with a group of processes that use electrical resistance heating to form the joint. A second group of processes, known as solid-state welding processes, create joints without any melting of the workpiece or filler material.

32.2 THEORY OF RESISTANCE WELDING

In *resistance welding*, heat and pressure are combined to induce coalescence. *Electrodes* are placed in contact with the material, and electrical resistance heating is used to raise the temperature of the workpieces and the interface between them. The same electrodes that supply the current also apply the pressure, which is usually varied throughout the weld cycle. A certain amount of pressure is applied initially to hold the workpieces in contact and thereby control the electrical resistance at the interface. When the proper temperature has been attained, the pressure is increased to induce coalescence. Because pressure is utilized, coalescence occurs at a lower temperature than that required for oxyfuel gas or arc welding. In fact, melting of the base metal does not occur in many resistance-welding operations. Resistance-welding processes might well be considered as a form of solid-state welding, although they are not officially classified as such by the American Welding Society.

In some resistance-welding processes, additional pressure is applied immediately after coalescence to provide a certain amount of forging action. Accompanying the deformation is a certain amount of grain refinement. Additional heating can also be employed after welding to provide tempering and/or stress relief.

The required temperature can often be attained, and coalescence can be achieved, in a few seconds or less. Resistance welding, therefore, is a very rapid and economical process, extremely well suited to automated manufacturing. No filler metal is required, and the tight contact maintained between the workpieces excludes air and eliminates the need for fluxes or shielding gases.

HEATING

The heat for resistance welding is obtained by passing a large electrical current through the workpieces for a short period of time. The amount of heat input can be determined by the basic relationship:

$$H = I^2Rt$$

where:

H = total heat input in joules

I = current in amperes

R = electrical resistance of the circuit in ohms

t = length of time during which current is flowing in seconds

It is important to note that the workpieces actually form part of the electrical circuit, as illustrated in Figure 32-1, and that the total resistance between the electrodes consists of three distinct components:

1. The bulk resistance of the electrodes and workpieces—the upper electrode, upper workpiece, lower workpiece and lower electrode
2. The contact resistance between the electrodes and the workpieces—between the upper electrode and upper workpiece and the lower electrode and lower workpiece
3. The resistance between the surfaces to be joined, known as the *faying surfaces*

Since the maximum amount of heat is generated at the point of maximum resistance, it is desirable to have this be the location where the weld is to be made. Therefore, it is essential to keep components 1 and 2 as low as possible with respect to resistance 3. The bulk resistance of the electrodes is always quite low, and that of the workpieces is determined by the type and thickness of the metal being joined. Because of the large areas involved and the relatively high electrical conductivity of most metals, the workpiece resistances are usually much less than the contact or interface values. Resistance 2 (the resistance between the electrodes and workpieces) can be minimized by using electrode materials that are excellent electrical conductors and by controlling the size and shape of the electrodes and the applied pressure. Any change in the pressure between the electrodes and workpieces, however, also affects the contact between the faying surfaces. Therefore, only limited control of the electrode-to-work resistance can be obtained by pressure variation.

The final resistance, that between the faying surfaces, is a function of (1) the quality (surface finish or roughness) of the surfaces; (2) the presence of nonconductive scale, dirt, or other contaminants; (3) the pressure; and (4) the contact area. These factors must all be controlled if uniform resistance welds are to be produced.

As indicated in Figure 32-2, the objective of resistance welding is to bring both of the faying surfaces to the proper temperature, while simultaneously keeping the remaining material and the electrodes relatively cool. Water cooling is usually used to keep the electrode temperature low and thereby extend their useful life.

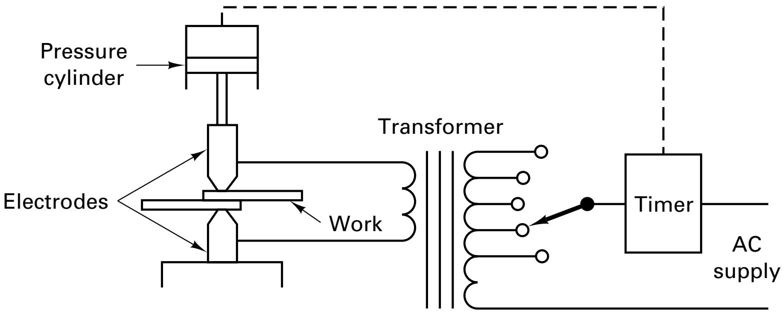

FIGURE 32-1 The basic resistance welding circuit.

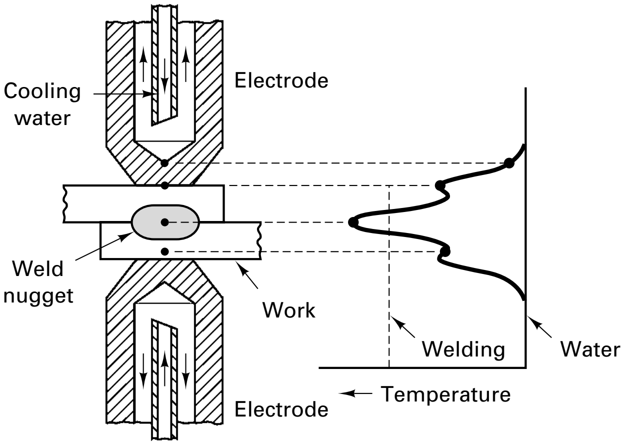

FIGURE 32-2 The desired temperature distribution across the electrodes and workpieces during resistance welding.

PRESSURE

Because the applied pressure promotes a forging action, resistance welds can be produced at lower temperatures than welds made by other processes. Controlling both the magnitude and timing of the pressure, however, is very important. If too little pressure is used, the contact resistance will be high and surface burning or pitting of the electrodes may result. If excessive pressure is applied, molten or softened metal may be expelled from between the faying surfaces or the electrodes may indent the softened workpiece. Ideally, moderate pressure should be applied to hold the workpieces in place and establish proper resistance at the interface prior to and during the passage of the welding current. The pressure should then be increased considerably just as the proper welding temperature is attained. This completes the coalescence and forges the weld to produce a fine-grained structure.

On small, foot-operated machines, only a single spring-controlled pressure is used. On larger, production-type welders, the pressure is generally applied through controllable air or hydraulic cylinders.

CURRENT AND CURRENT CONTROL

While surface conditions and pressure are important variables, the temperature achieved during resistance welding is primarily determined by the magnitude and duration of the welding current. The various resistances change as current flows and the material heats. The bulk resistances of metal increase as temperature rises, and the contact resistances decrease as the metal softens and pressure improves the contact. Since the best conditions are the initial ones, high currents and short time intervals are generally preferred. The weld location can attain the desired temperature while minimizing the amount of heat generated in or dissipated to the adjacent material.

In production-type welders, the magnitude, duration, and timing of both current and pressure can be programmed to follow specified cycles. Figure 32-3 shows a relatively simple cycle for a resistance weld that includes both forging and postheating operations.

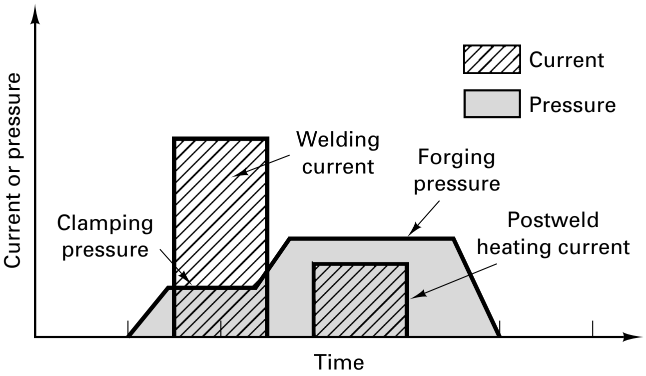

FIGURE 32-3 A typical current and pressure cycle for resistance welding. This cycle includes forging and postheating operations.

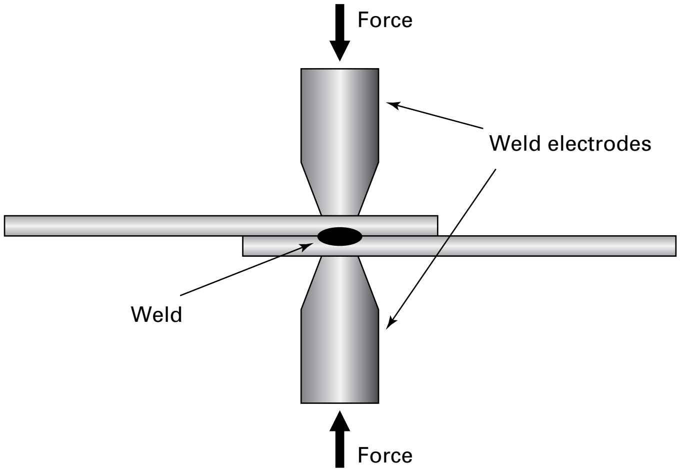

FIGURE 32-4 The arrangement of the electrodes and workpieces in resistance spot welding.

The quality of the final weld, therefore, often depends more on the development of a proper schedule and the subsequent setup, adjustment, and maintenance of equipment than it does on operator skill.

POWER SUPPLY

Since the overall resistance in the welding circuits can be quite low, high currents are generally required to produce a resistance weld. Power transformers convert the high-voltage, low-current line power to the high-current (up to 100,000 amps), low-voltage (0.5 to 10 volts) power required for welding. Smaller machines may utilize single-phase circuitry, but the larger units generally operate on three-phase power. Many resistance welders use DC welding current, obtained through solid-state rectification of the three-phase power. These machines reduce the current demand per phase, give a balanced load, and produce excellent welds.

32.3 RESISTANCE WELDING PROCESSES

RESISTANCE SPOT WELDING

Resistance spot welding (RSW) is the simplest and most widely used form of resistance welding, providing a fast, economical means of joining overlapped materials that will not require subsequent disassembly. Even with all of the advances in technology, resistance spot welding is still the dominant method for joining sheet material, and the average steel-bodied automobile contains between 2000 and 5000 spot welds. Figure 32-4 presents a schematic of the process. Overlapped metal sheets are positioned between water-cooled electrodes, which have reduced areas at the tips to produce welds that are usually from 1.5 to 13 mm ($^1/_{16}$ to $^1/_2$ in.) in diameter. The electrodes close on the work, and the controlled cycle of pressure and current is applied to produce a weld at the metal interface. The electrodes are then opened, and the work is removed.

A satisfactory spot weld, like the one shown in Figure 32-5, consists of a *nugget* of coalesced metal formed between the faying surfaces. There should be little indentation

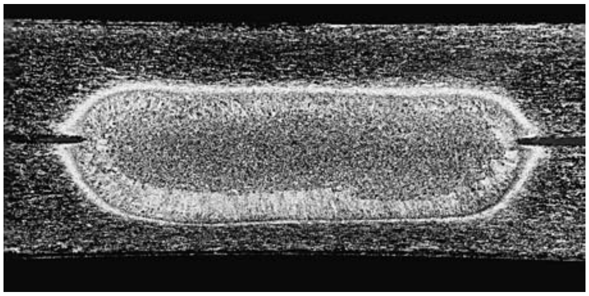

FIGURE 32-5 A spot-weld nugget between two sheets of 1.3-mm (0.05-in.) aluminum alloy. The nugget is not symmetrical because the radius of the upper electrode is greater than that of the lower electrode. *(Courtesy Lockheed Martin Corporation, Bethesda, MD.)*

FIGURE 32-6 Tear test of a satisfactory spot weld, showing how failure occurs outside of the weld.

of the metal under the electrodes. As shown in Figure 32-6, the strength of the weld should be such that in a tensile or tear test, the weld will remain intact while failure occurs in the heat-affected zone surrounding the nugget. Sound spot welds can be obtained with excellent consistency if proper current density and timing, electrode shape, electrode pressure, and surface conditions are maintained,

Spot-Welding Equipment. A variety of spot-welding equipment is available to meet the needs of production operations. For light-production work where complex current–pressure cycles are not required, a simple *rocker-arm machine* is often used. The lower electrode arm is stationary, while the upper electrode, mounted on a pivot arm, is brought down into contact with the work by means of a spring-loaded foot pedal. Rocker-arm machines are available with throat depths up to about 1.2 m (48 in.) and transformer capacities up to 50 kVa. They are used primarily on steel.

Larger spot welders, and those used at high production rates, are generally of the press type, as shown in Figure 32-7. On these machines, the movable electrode is controlled by an air or hydraulic cylinder, and complex pressure cycles can be programmed. Capacities up to 500 kVa with a 1.5-m (60-in.) throat depth are quite common. Special-purpose press-type welders can employ multiple welding heads to make up to 200 simultaneous spot welds in less than 60 seconds.

Quite often, the desired products are too large to be manipulated and positioned on a welding machine. Portable spot-welding guns have been instrumental in extending the process to such applications. The guns are connected to a stationary power supply and control unit by flexible air hoses, electrical cables, and water-cooling lines. They can be used in a manual fashion or installed on industrial robots where programmed positioning enables quality spot welds to be produced in a highly automated fashion. Robotic spot welding is currently the most common means of joining sheet metal components in the automotive industry.

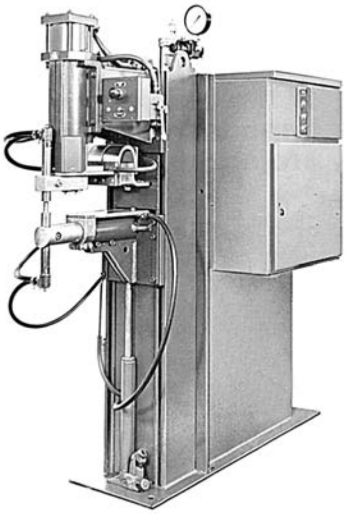

FIGURE 32-7 Single-phase, air-operated, press-type resistance welder with microprocessor control. *(Courtesy Sciaky Inc., Chicago, IL.)*

Electronic advances in the late 1980s enabled the welding transformer to be integrated into the welding gun. By transforming the power immediately adjacent to the area of use, the small integral transformer guns, or *transguns*, offer reduced power losses and enhanced process efficiency. However, if accurate positioning is required in an articulated system like an industrial robot, the added weight of the integral transformer may become a disadvantage. Servomotors have also been incorporated into a variety of spot-welding machines to control the electrode positioning, speed of closure, level of applied torque or pressure, and rate at which the load is applied.

Electrodes. Resistance spot-welding electrodes must conduct the welding current to the work, set the current density at the weld location, apply force, and help dissipate heat during the noncurrent portions of the welding cycle. Electrical and thermal conductivity properties are important considerations for electrode selection. Hot compressive strength must be sufficient to resist electrode deformation during the application of pressure. In addition, the electrode should not melt under welding conditions and should be of a composition that does not alloy with the material being welded—a

TABLE 32-1 Metal Combinations That Can Be Spot Welded

Metal	Aluminum	Brass	Copper	Galvanized Iron	Iron (Wrought)	Monel	Nichrome	Nickel	Nickel Silver	Steel	Tin Plate	Zinc
Aluminum	x										x	x
Brass		x	x	x	x	x	x	x	x	x	x	x
Copper		x	x	x	x	x	x	x	x	x	x	x
Galvanized Iron		x	x	x	x	x	x	x	x	x	x	
Iron (Wrought)		x	x	x	x	x	x	x	x	x	x	
Monel		x	x	x	x	x	x	x	x	x	x	
Nichrome		x	x	x	x	x	x	x	x	x	x	
Nickel		x	x	x	x	x	x	x	x	x	x	
Nickel Silver		x	x	x	x	x	x	x	x	x	x	
Steel		x	x	x	x	x	x	x	x	x	x	
Tin Plate	x	x	x	x	x	x	x	x	x	x		
Zinc	x	x	x									x

phenomenon that promotes sticking or galling and electrode wear. The Resistance Welder Manufacturers Association (RWMA) has standardized various electrode geometries and has approved a variety of electrode materials, including copper-base alloys, refractory metals, and refractory–metal composites.

Spot-Weldable Metals and Geometries. While steel is clearly the most common metal that is spot welded, one of the greatest advantages of the process is that virtually all of the commercial metals can be joined, and most of them can be joined to each other. In only a few cases do the welds tend to be brittle. Table 32-1 shows some of the many combinations of metals that can be successfully spot welded.

While spot welding is primarily used to join wrought sheet material, other forms of metal can also be welded. Sheets can be attached to rolled shapes and steel castings, as well as some types of nonferrous die castings. Most metals require no special preparation, except to be sure that the surface is free of corrosion and is not badly pitted. For best results, aluminum and magnesium should be cleaned immediately prior to welding by some form of mechanical or chemical technique. Metals that have high electrical conductivity require clean surfaces to ensure that the electrode-to-metal resistance is low enough for adequate temperature to be developed within the metal itself. Silver and copper are especially difficult to weld because of their high thermal conductivity. Higher welding currents coupled with water cooling of the surrounding material may be required if adequate welding temperatures are to be obtained.

When the two pieces being joined are of the same thickness, the practical limit for spot welding is about 3 mm ($^{1}/_{8}$ in.) for each sheet. Sheets of differing thickness can also be joined, and thin pieces can be attached to material that is considerably thicker than 3 mm. When metals of different thickness or different conductivity are to be welded, however, a larger electrode or one with higher conductivity is often used against the thicker or higher-resistance material to ensure that both workpieces will be brought to the desired temperature in a simultaneous fashion.

RESISTANCE SEAM WELDING

Resistance seam welds (RSEW) can be made by two distinctly different processes. In the first process, sheet metal segments are joined to produce gas- or liquid-tight vessels, such as gas tanks, mufflers, and simple heat exchangers. The weld is made between overlapping sheets of metal, and the seam is simply a series of overlapping spot welds, like

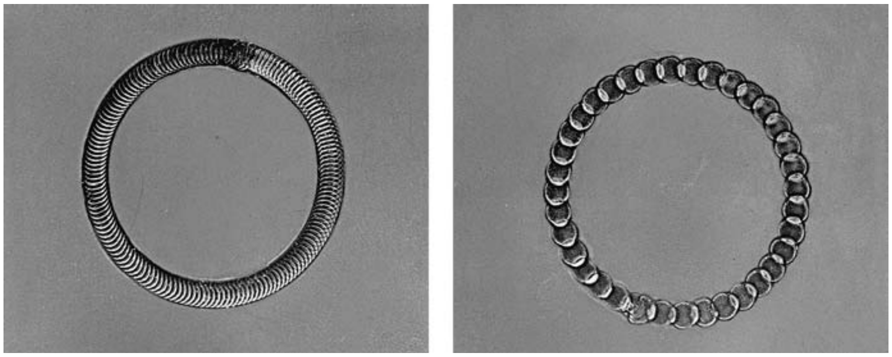

FIGURE 32-8 Seam welds made with overlapping spots of varied spacing. *(Courtesy Taylor-Winfield Corporation, Brookfield, OH.)*

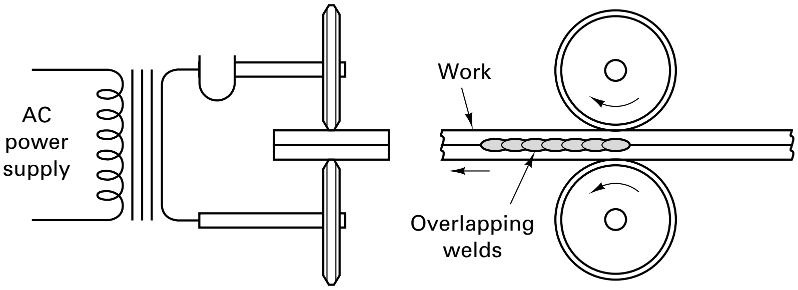

FIGURE 32-9 Schematic representation of the seam-welding process.

those shown in Figure 32-8. The basic equipment is the same as for spot welding, except that the electrodes now assume the form of rotating disks, like those shown schematically in Figure 32-9. As the metal passes between the electrodes, timed pulses of current form the overlapping welds. The timing of the welds and the movement of the work are controlled to ensure that the welds overlap and the workpieces do not get too hot. The welding current is usually a bit higher than in conventional spot welding (to compensate for the short circuit of the adjacent weld), and the workpiece is often cooled by a flow of air or water. In a variation of the process, a continuous current is passed through the rotating electrodes to produce a continuous seam. This form of seam welding is best suited for thin materials, but metals up to 6 mm ($^1/_4$ in.) can be joined. A typical welding speed is about 2 m/min for thin sheet.

The second type of resistance seam welding, known as *resistance butt welding*, is used to produce butt welds between thicker metal plates. The electrical resistance of the abutting metals is still used to generate heat, but high-frequency current (up to 450 kHz) is now employed to restrict the flow of current to the surfaces to be joined and their immediate surroundings. (*Note:* This is similar to the results obtained in the parallel process of high-frequency induction heating.) When the abutting surfaces attain the desired temperature, they are pressed together to form a weld.

Resistance butt welding is used extensively in the manufacture of pipes and tubes, as illustrated in Figure 32-10, but the process is also used to construct simple structural shapes from sections of plate. Material from 0.1 mm (0.004 in.) to more than 20 mm ($^3/_4$ in.) in thickness can be welded at speeds up to 80 m/min (250 fpm). The combination of high-frequency current and high welding speed produces a very narrow heat-affected zone. Almost any type or combination of metal can be welded, including difficult dissimilar metals and the high-conductivity metals, such as aluminum and copper.

PROJECTION WELDING

In a mass-production operation, conventional spot welding is plagued by two significant limitations. Because the small electrodes provide both the high currents and the required pressure, the electrodes generally require frequent attention to maintain their geometry. In addition, the process is designed to produce only one spot weld at a time. When increased strength is required, multiple welds are often needed, and this means

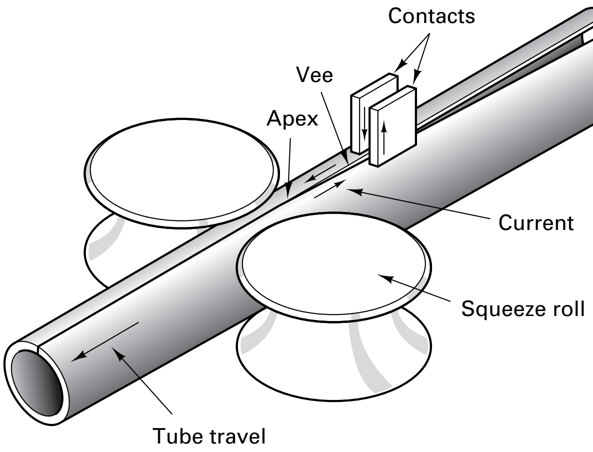

FIGURE 32-10 Using high-frequency AC current to produce a resistance seam weld in butt-welded tubing. Arrows from the contacts indicate the path of the high-frequency current.

multiple operations. *Projection welding* (RPW) provides a means of overcoming these limitations.

Figure 32-11 illustrates the principle of projection welding. A dimple is *embossed* into one of the workpieces at the location where a weld is desired. The two workpieces are then placed between large-area electrodes in a press machine, and pressure and current are applied as in spot welding. Since the current must flow through the points of contact (i.e., the dimples), the heating is concentrated where the weld is desired. As the metal heats and becomes plastic, the pressure causes the dimple to flatten and form a weld.

Because the projections are press formed into the sheet, they can often be produced during previous blanking and forming operations with virtually no additional cost. Moreover, the dimples or projections can be made in almost any shape—round, oval, or circular ring-shaped—to produce welds of shapes that optimize a given design. It is important, however, that the shape be such that the weld will form outward from the center of the projection. Since the heat tends to develop in the piece with the projections, it is best to incorporate them into the heavier of the two pieces to be joined or the metal with the higher conductivity.

Multiple dimples can be incorporated into a sheet, enabling multiple welds to be produced at one time. The number of projections is limited only by the ability of the machine to provide the required current and pressure and the need to uniformly distribute both. If more than three projections are to be made at one time, however, the height of all projections should be uniform to ensure uniform contact and heating.

An attractive feature of projection welding is the fact that it does not require special equipment. Conventional spot-welding machines can be converted to projection welding simply by changing the size and shape of the electrodes. In addition, projection welding leaves no indentation mark on the exterior surfaces, a definite advantage over spot welding when good surface appearance is required.

In a variation of the process, projection welding can also be used to attach bolts and nuts to other metal parts. Contact is made at a projection that has been machined or forged onto the bolt or nut. Current is applied, and the pieces are pressed together to form a weld.

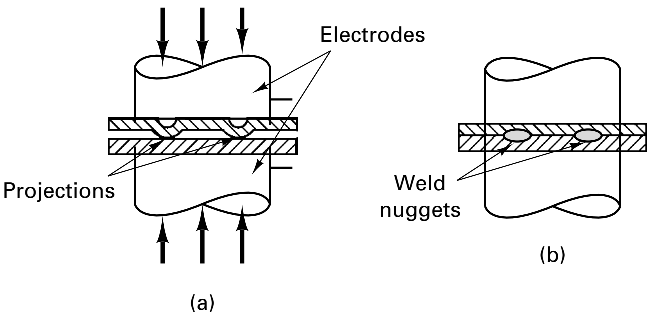

FIGURE 32-11 Principle of projection welding (a) prior to application of current and pressure and (b) after formation of the welds.

32.4 ADVANTAGES AND LIMITATIONS OF RESISTANCE WELDING

The resistance-welding processes have a number of distinct advantages that account for their wide use, particularly in mass-production operations:

1. They are very rapid.
2. The equipment can often be fully automated.
3. They conserve material, since no filler metal, shielding gases, or flux is required.
4. There is minimal distortion of the parts being joined.
5. Skilled operators are not required.
6. Dissimilar metals can be easily joined.
7. A high degree of reliability and reproducibility can be achieved.

The primary limitations of resistance welding include:

1. The equipment has a high initial cost.
2. There are limitations to the thickness of material that can be joined (generally less than 6 mm or $^1/_4$ inch) and the type of joints that can be made (mostly *lap joints*). Lap joints tend to add weight and material.
3. Access to both sides of the joint is usually required to apply the proper electrode force or pressure.
4. Skilled maintenance personnel are required to service the control equipment.
5. For some materials, the surfaces must receive special preparation prior to welding.

The resistance-welding processes are among the most common techniques for high-volume joining. The rapid heat inputs, short welding times, and rapid quenching by both the base metal and the electrodes can produce extremely high cooling rates in and around the weld. While these conditions can be quite attractive for most nonferrous metals, untempered martensite can form in steels containing more than 0.15% carbon. For these materials, some form of postweld heating is generally required to eliminate possible brittleness.

Table 32-2 provides a process summary for resistance welding.

32.5 SOLID-STATE WELDING PROCESSES

FORGE WELDING

Being the most ancient of the welding processes, *forge welding* (FOW) has both historical and practical value, as it helps us to understand how and why the modern welding practices were developed. The armor makers of ancient times occupied positions of prominence in their society, largely because of their ability to join pieces of metal into single, strong products. The village blacksmith was a more recent master of forge welding. With his hammer and anvil, coupled with skill and training, he could create a wide variety of useful shapes from metal.

TABLE 32-2 Process Summary: Resistance Welding (RW)

Heat source	Electrical resistance heating with high current
Protection	None; isolation of weld site is adequate
Material joined	All common metals (steel, aluminum, and copper)
Rate of heat input	High
Weld profile (D/W)	Does not apply
Maximum penetration	Does not apply
Assets	High speed; Small HAZ; no flux, filler metal, or shielding gas required; adaptable to mass production
Limitations	Equipment is more expensive than arc welding; welds are weaker than arc welds; requires access to both sides of a joint

Using a charcoal forge, the blacksmith heated the pieces to be welded to a practical forging temperature and then prepared the ends by hammering so that they could be properly fitted together. The ends were then reheated and dipped into a borax flux. Heating was continued until the blacksmith judged (by color) that the workpieces were at the proper temperature for welding. They were then withdrawn from the heat and either struck on the anvil or hit by the hammer to remove any loose scale or impurities. The ends to be joined were then overlapped on the anvil and hammered to the degree necessary to produce an acceptable weld.

As the two pieces reduce in thickness, they spread in width, resulting in the creation of new, fresh, uncontaminated metal surface. As these surfaces are being created, the hammer blows also provide the necessary pressure to produce instant coalescence. Thus, by the correct combination of heat and deformation, a competent blacksmith could produce joints that might be every bit as strong as the original metal. However, because of the crudeness of the heat source, the uncertainty of temperature, and the difficulty in maintaining metal cleanliness, a great amount of skill was required and the results were highly variable.

FORGE-SEAM WELDING

Although forge welding has largely been replaced by other joining methods, a large amount of *forge-seam welding* is still used in the manufacture of pipe. As previously presented in Chapter 17, a heated strip of steel is first formed into a cylinder, and the edges are simply pressed together in either a lap or a butt configuration. Welding is the result of pressure and deformation when the metal is pulled through a conical welding bell or passed between welding rolls.

COLD WELDING

Cold welding is a variation of forge welding that uses no heating but produces metallurgical bonds by means of room-temperature plastic deformation. The surfaces to be joined are first cleaned and placed in contact. They are then subjected to high localized pressure, sufficient to cause about 30 to 50% cold work. While some heating will occur due to the severe deformation, the primary factor in producing coalescence is the high pressure acting on newly formed surface material. The cold-welding process is generally confined to the joining of small parts made from soft, ductile metal, such as the electrical connections shown in Figure 32-12.

ROLL WELDING OR ROLL BONDING

In the *roll-welding* or *roll-bonding* (ROW) process, two or more sheets or plates of metal are joined by passing them simultaneously through a rolling mill. As the materials are reduced in thickness, the length and/or width must increase to compensate. The newly

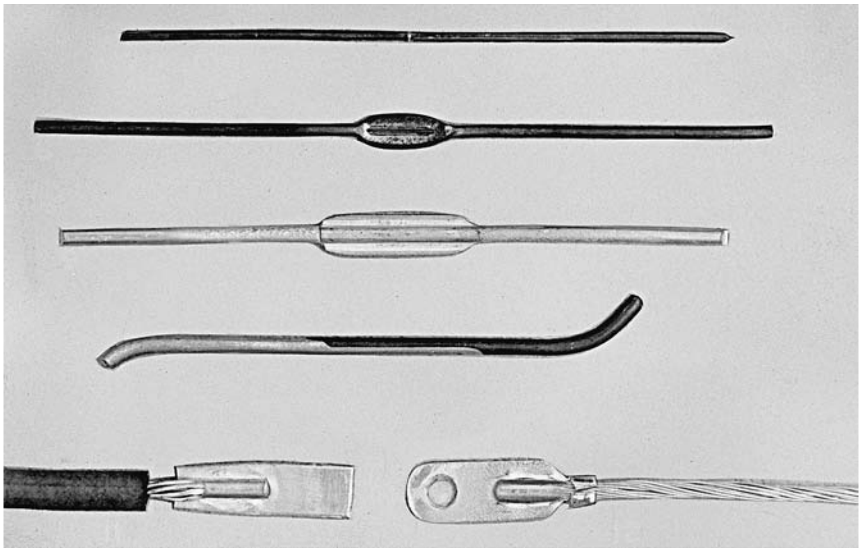

FIGURE 32-12 Small parts joined by cold welding. *(Courtesy of Koldweld Corporation, Willoughby, OH.)*

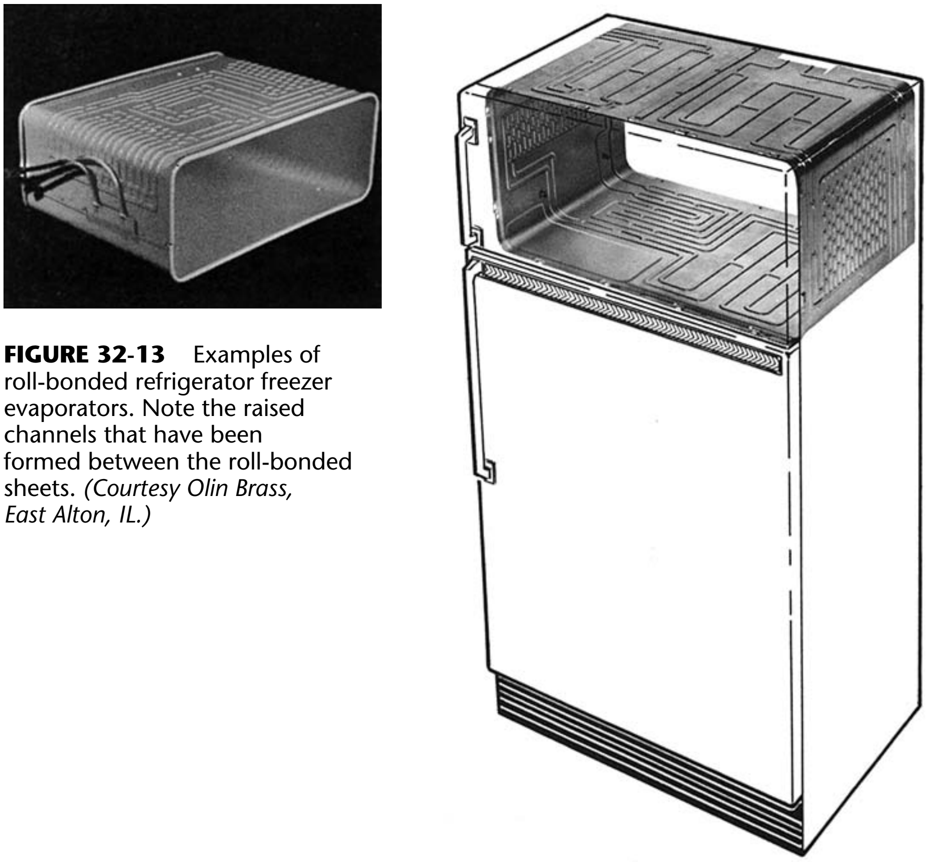

FIGURE 32-13 Examples of roll-bonded refrigerator freezer evaporators. Note the raised channels that have been formed between the roll-bonded sheets. *(Courtesy Olin Brass, East Alton, IL.)*

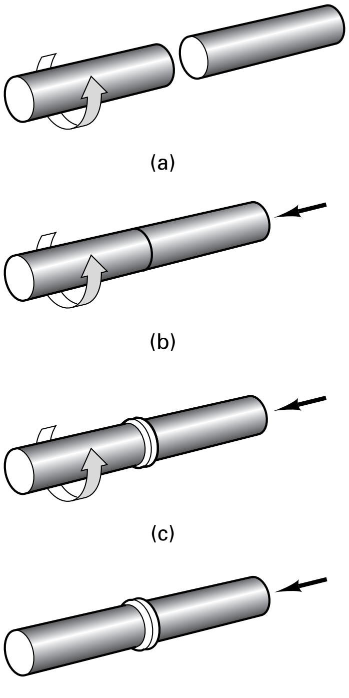

FIGURE 32-14 Sequence for making a friction weld. (a) Components with square surfaces are inserted into a machine where one part is rotated and the other is held stationary. (b) The components are pushed together with a low axial pressure to clean and prepare the surfaces. (c) The pressure is increased, causing an increase in temperature, softening, and possibly some melting. (d) Rotation is stopped and the pressure is increased rapidly, creating a forged joint with external flash.

created uncontaminated interfaces are pressed together by the rolls and coalescence is produced. Roll bonding can be performed either hot or cold and can be used to join either similar or dissimilar metals (such as the Alclad aluminums—a skin of high-corrosion-resistance aluminum over a core of high-strength aluminum—or conventional steel with a stainless steel cladding). The resulting bond can be quite strong, as evidenced by the roll-bonded "sandwich" material used in the production of various U.S. coins.

By precoating select portions of one interface surface with a material that prevents bonding, the roll-bonding process can be used to produce sheets that have both bonded and nonbonded areas. Subsequent heating in an oven or furnace can cause the no-bond coating to volatilize. The resulting pressure expands the no-bond regions, producing flow paths for gases or liquids. A common example of this technique is in the manufacture of refrigerator freezer panels, like those shown in Figure 32-13, where inexpensive sheet metal is used to produce structural panels that also serve to conduct the coolant.

FRICTION WELDING AND INERTIA WELDING

In *friction welding* (FRW) the heat required to produce the joint is generated by friction heating at the interface. The components to be joined are first prepared to have smooth, square-cut surfaces. As shown in Figure 32-14, one piece is then held stationary while the other is mounted in a motor-driven chuck or collet and rotated against the first piece at high speed. A low contact pressure may be applied initially to permit cleaning of the surfaces by a burnishing action. The pressure is then increased, and contact friction quickly generates enough heat to soften both components and raise the abutting surfaces to the welding temperature. As soon as this temperature is reached, rotation is stopped and the pressure is further increased to complete the weld. The softened metal is squeezed out to the edges of the joint, forming a *flash*, which can be removed by subsequent machining. Clean, uncontaminated material is left on the interface, and the force creates a "forged" structure in the joint. Friction welding has been used to join steel bars up to 20 cm (8 in.) in diameter and tubes of even larger diameter. The process is also ideal for welding dissimilar metals with very different melting temperatures and physical

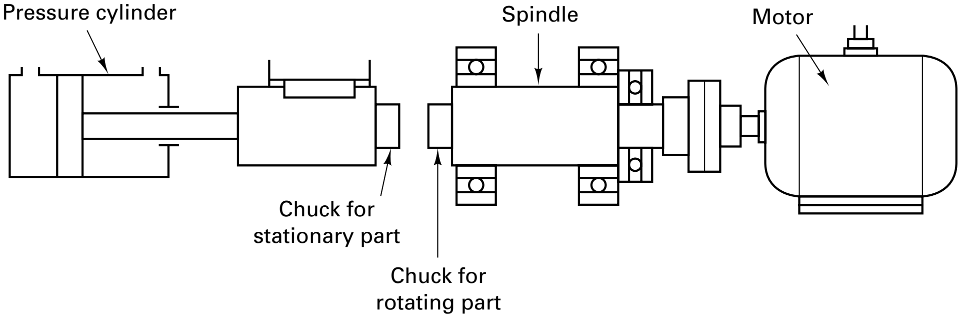

FIGURE 32-15 Schematic diagram of the equipment used for friction welding. *(Courtesy of* Materials Engineering.*)*

properties, such as copper to aluminum, titanium to copper, and nickel alloys to steel. Figure 32-15 shows a schematic of the equipment required for friction welding.

Inertia welding is a modification of friction welding where the moving piece is attached to a rotating flywheel (Figure 32-16). The flywheel is brought to a specified rotational speed, storing a predetermined amount of kinetic energy, and is then separated from the driving motor. The rotating and stationary components are then pressed together, and the kinetic energy of the flywheel is converted into frictional heat at the interface between the two pieces. The weld is formed when the flywheel stops its motion and the pieces remain pressed together. Since the conditions of inertia welding are easily duplicated, welds of extremely consistent quality can be produced and the process can be readily automated.

With inertia welding, the time required to form a weld can be very short, often on the order of several seconds. Because of the high rate of heat input and the limited time for heat to flow away from the joint, both the weld and heat-affected zones are usually very narrow. Oxides and other surface impurities tend to be displaced radially into the upset *flash*, which is generally removed after welding. Because virtually all of the energy is converted to heat, the process is very efficient. No material is melted, so joints can be formed with a wide variety of metals or combinations of metals, including some not normally considered compatible, such as aluminum to steel. Graphite-bearing cast irons, free-machining metals, and some bearing materials must be excluded, since the graphite, lead, or free-machining additive smears across the surface, reducing the friction heating and preventing good solid-state bonding. One, or preferably both, of the components must be sufficiently ductile (when hot) to permit deformation during the forging stage. Grain size tends to be refined during the hot deformation, so the strength of the weld is about the same as that of the base metal. In addition, the friction processes are environmentally attractive since no smoke, fumes, or gases are generated, and no fluxes are required.

Because of the rotational motion, both of the above processes require that one of the components have rotational symmetry. They are used primarily to join round bars or tubes of the same size or connect bars or tubes to flat surfaces. By using linear, orbital, or angular reciprocating motions, friction welding can be extend to noncircular shapes, such as square and rectangular bars. Figure 32-17 shows some typical friction-welded parts.

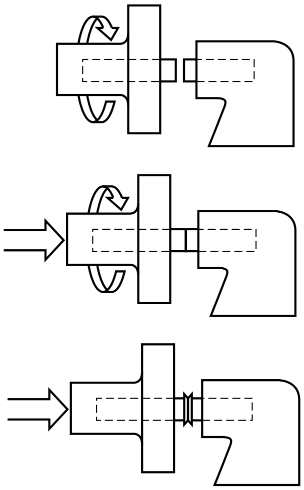

FIGURE 32-16 Schematic representation of the various steps in inertia welding. The rotating part is now attached to a large flywheel.

FRICTION-STIR WELDING

A relatively new process, first performed by the Welding Institute of Great Britain in 1991, *friction-stir welding* (FSW) has matured rapidly and currently offers significant benefits compared to conventional methods. As illustrated in Figure 32-18, a nonconsumable welding tool (containing a shoulder and protruding cylindrical or tapered probe or pin) is rotated at several hundred revolutions per minute. It is then lowered into the interface between pieces of rigidly clamped material, and frictional heat is generated along the top surface (under the rotating shoulder) and along the surfaces of the rotating probe. After a period of time for heating and softening, the tool is driven along the material interface. As the probe traverses, a plasticized region is continually created. This softened material is swept along the periphery of the pin, flows to the back of the advancing probe, and coalesces to form a solid-state bond. The most common application is the formation of butt welds, usually between plates of the lower-melting-point metals (both wrought and cast alloys) or thermoplastic polymers.

FIGURE 32-17 Some typical friction-welded parts. (Top) Impeller made by joining a chrome–moly steel shaft to a nickel–steel casting. (Center) Stud plate with two mild steel studs joined to a square plate. (Bottom) Tube component where a turned segment is joined to medium-carbon steel tubing. *(Courtesy of Newcor Bay City, Division of Newcor, Inc., Royal Oak, MI.)*

Weld quality is excellent. The extensive plastic deformation creates a refined grain structure with no entrapped oxides or gas porosity. As a result, the strength, ductility, fatigue life, and toughness of the resulting weld are all quite good. Welds in aircraft aluminum are 30 to 50% stronger than those formed by arc welding. Since no material is melted, both wrought and cast alloys can be joined, and they can be joined to each other. No filler material or shielding gas is required, and the process is environmentally friendly (no fumes, weld spatter, or arc glare). Because of the high energy efficiency, total heat input and associated distortion and shrinkage are all low. Joint preparation is minimal, and surface oxides need not be removed. Welding can be performed in any position and requires access to only one side of the plate. Gaps up to 10% of the material thickness can be accommodated with no reduction in weld quality or performance. Weld speed, however, is slower than in most fusion processes.

As shown in Figure 32-18, the key process variables include probe geometry (diameter, depth, and profile), shoulder diameter, rotation speed, downward force, travel speed, and possible tilt to the tool.

Friction-stir welding has been used to weld nearly all of the wrought aluminum alloys, including some that are classified as "unweldable" by fusion processes. Aluminum plates up to 65 mm ($2^{1}/_{2}$ in.) thick have been successfully welded from a single side, and aluminum up to 75 mm (3 in.) thick has been welded by a two-sided process. Copper, lead, magnesium, titanium, and zinc have all been successfully welded, along with thin steel plate and some combinations of dissimilar materials.

As an indication of process capability, the Eclipse 500, a six-passenger, short-hop air taxi, built by Eclipse Aviation of Albuquerque, New Mexico, contains over 135 meters (5300 inches) of friction-stir welds on the aluminum fuselage and wing panel assemblies, eliminating over 60% of the usual rivets. Various thermoplastics, including polyethylene, polypropylene, nylon, polycarbonate, and ABS, have also been successfully welded, with several exhibiting as-welded strengths exceeding 95% of the tensile strength of the base material.

In an extension known as *friction-stir processing*, the thermomechanical features of friction-stir are used for purposes other than creating a joint. By tracking the stir tool through the material with overlapping passes, ultrafine grain size ($<10\ \mu$m) can be produced that enables superplastic forming at comparatively high strain rates. While superplasticity is usually limited to thin sheets, thicker material can now be made superplastic, and by stirring only selected locations, large parts can be made from less expensive conventional materials, with enhanced formability in only the needed locations. In other applications, key surfaces of large castings can be enhanced by the passage of the probe. The cast structure, with possible microporosity and segregation, is replaced by a fine, homogeneous, wrought microstructure. Strength, ductility, corrosion resistance, and fatigue resistance are all improved. Fusion welds can be stirred to replace the cast structure with a fine, worked structure, removing any weld defects and enhancing properties. Reinforcement particles can be stirred into a material to create a

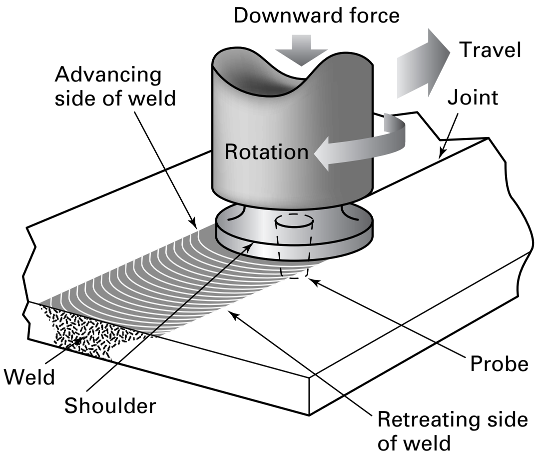

FIGURE 32-18 Schematic of the friction-stir welding process. The rotating probe generates frictional heat, while the shoulder provides additional friction heating and prevents expulsion of the softened material from the joint. (*Note*: To provide additional forging action and confine the softened material, the tool may be tilted so the trailing edge is lower than the leading segment.)

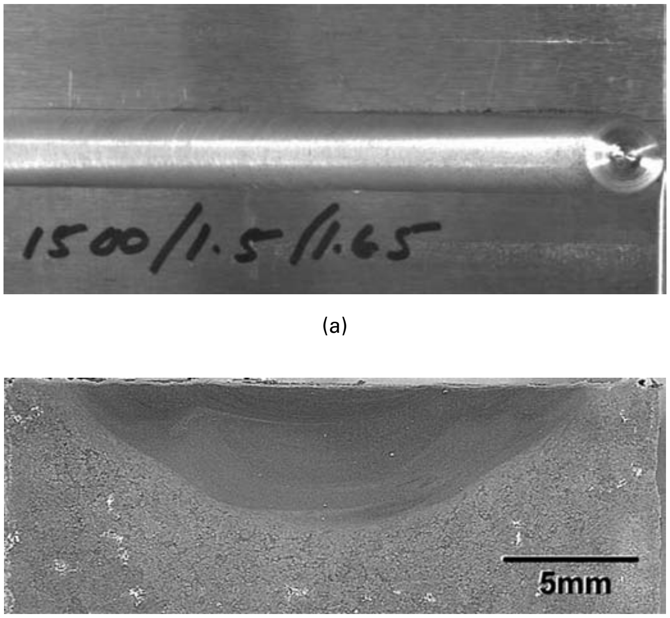

(a)

(b)

FIGURE 32-19 (a) Top surface of a friction-stir weld joining 1.5-mm- and 1.65-mm-thick aluminum sheets with 1500-rpm pin rotation. The welding tool has traversed left-to-right and has retracted at the right of the photo. (b) Metallurgical cross section through an alloy 356 aluminum casting that has been modified by friction-stir processing.

particle-reinforced composite surface on a standard alloy substrate. Powder products of unique composition can be brought to full density with attractive strength and ductility. In a modification known as friction-stir channeling, a slight upward helix is incorporated onto the surface of the rotating probe. As the probe rotates, material is displaced upward, creating a continuous subsurface channel, such as those used for conveying cooling water.

One of the photos in Figure 32-19 shows a friction-stir weld in aluminum plate, viewed from the top. The other shows the structural changes induced by a friction-stir pass through an aluminum-alloy casting. Note the significant refinement in structure. Table 32-3 summarizes some of the attractive features of the friction-stir process.

TABLE 32-3 Attractive Features of Friction-Stir Welding

Metallurgical benefits:

- Excellent weld quality
- Applicable to a wide range of materials, including some "nonweldable" by fusion methods
- Solid-state process
- Low distortion of the workpiece
- High joint strength
- No loss of alloy elements
- Fine microstructure
- No cracking

Environmental benefits:

- No shielding gas is required
- No surface cleaning is required
- No solvent degreasing is used
- No fumes, gases, or smoke is produced
- Postweld finishing is often unnecessary
- No arc glare or reflected laser beams

Energy benefits:

- Welds produced with far less energy than in other processes
- Enables weight reduction in aircraft, automobiles, and ships

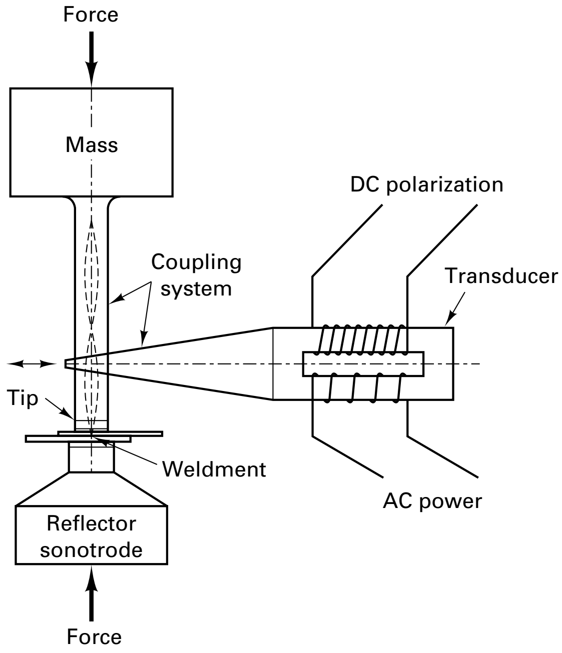

FIGURE 32-20 Diagram of the equipment used in ultrasonic welding.

ULTRASONIC WELDING

In *ultrasonic welding* (USW), coalescence is produced by the localized application of high-frequency (10,000 to 200,000 Hz) shear vibrations to surfaces that are held together under rather light normal pressure. Although there is some heating at the faying surfaces, the interface temperature rarely exceeds one-half of the melting point of the material (on an absolute-temperature scale). Instead, it appears that the rapid reversals of stress along the contact interface break up and disperse the oxide films and surface contaminants, allowing the clean metal surfaces to coalesce into a high-strength bond.

Figure 32-20 depicts the basic components of the ultrasonic welding process. The ultrasonic transducer is essentially the same as that employed in ultrasonic machining. It is coupled to a force-application system that contains a welding tip on one end, either stationary for spot welds or rotating for seams. The pieces to be welded are placed between this tip and a reflecting anvil, thereby concentrating the vibratory energy.

Ultrasonic welding is restricted to the lap joint welding of thin materials—sheet, foil, and wire—or the attaching of thin sheets to heavier structural members. The maximum thickness is about 2.5 mm (0.1 in.) for aluminum and 1.0 mm (0.04 in.) for harder metals. As indicated in Table 32-4, the process is particularly attractive because of the number of metals and combinations of dissimilar metals that can be joined. It is even possible to bond metals to nonmetals, such as aluminum to ceramics or glass. Because the temperatures are low and no arcing or current flow is involved, the process is often preferred for heat-sensitive electronic components. Intermetallic compounds seldom form, and there is no contamination of the weld or surrounding area. The equipment is simple and reliable, and only moderate skill is required of the operator. Surface preparation is less than for most competing processes (such as resistance welding), and less energy is needed to produce a weld. Typical applications include joining the dissimilar metals in bimetallics, making microcircuit electrical contacts, welding refractory or reactive metals, bonding ultra-thin metal, and encapsulating explosives or chemicals.

Ultrasonic welding has also been used to produce spot and seam welds on thin plastics and to seal foil or plastic envelopes and pouches. Compared to joining methods that employ solvents or adhesives, the ultrasonic method is considerably faster and results in products with cleaner surfaces.

DIFFUSION WELDING

Diffusion welding (DFW) or *diffusion bonding* occurs when properly prepared surfaces are maintained in contact under sufficient pressure and time at elevated temperature.

TABLE 32-4 Metal Combinations Weldable by Ultrasonic Welding

Metal	Aluminum	Copper	Germanium	Gold	Molybdenum	Nickel	Platinum	Silicon	Steel	Zirconium
Aluminum	x	x	x	x	x	x	x	x	x	x
Copper		x		x		x	x		x	x
Germanium			x	x		x	x	x		
Gold				x		x	x	x		
Molybdenum					x	x			x	x
Nickel						x	x		x	x
Platinum							x		x	
Silicon										
Steel									x	x
Zirconium										x

In contrast to the deformation-welding methods, plastic flow is limited and the principal bonding mechanism is atomic diffusion. A well-prepared interface can be viewed as a planar grain boundary with intervening voids and impurities. Under low pressure and elevated temperature, atomic diffusion will provide the necessary void shrinkage and grain boundary migration to form a metallurgical bond.

The quality of a diffusion weld depends on the surface condition of the materials, temperature, time at temperature, pressure, and the possible use of intermediate material layers, which can either promote diffusion or prevent the formation of undesirable intermetallic compounds. Some intermediate layers are designed to melt and form a temporary liquid that significantly accelerates the rate of atom movement.

Diffusion bonding is frequently used to join dissimilar metals and composite materials. Furnaces with inert or protective atmospheres can be used to produce high-quality joints with the reactive metals, such as titanium, beryllium, and zirconium, and the high-temperature refractory metals. Since the bonding process is quite slow, multiple parts are generally loaded into a furnace or the application is restricted to low-volume production.

EXPLOSIVE WELDING

Explosive welding (EXW) is used primarily to bond sheets of corrosion-resistant metal to heavier plates of base metal (a cladding operation), particularly when large areas are involved. As shown in Figure 32-21, the bottom sheet or plate is positioned on a rigid base or anvil, and the top sheet is inclined to it with a small open angle between the surfaces to be joined. An explosive material, usually in the form of a sheet, is placed on top of the

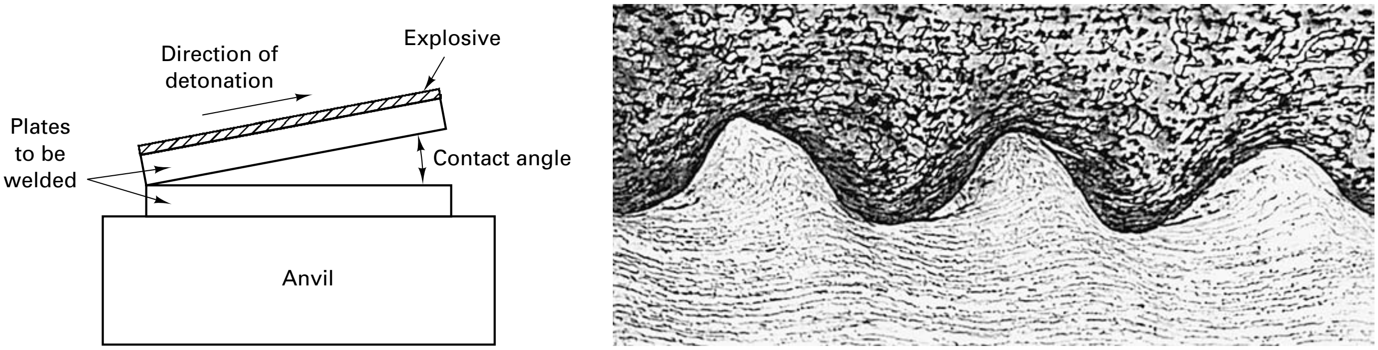

FIGURE 32-21 (Left) Schematic of the explosive welding process. (Right) Explosive weld between mild steel and stainless steel, showing the characteristic wavy interface.

two layers of metal and detonated in a progressive fashion, beginning where the surfaces touch. A compressive stress wave, on the order of thousands of megapascals (hundreds of thousands of pounds per square inch), sweeps across the surface of the plates. Surface films are liquefied or scarfed off the metals and are jetted out of the interface. The clean metal surfaces are then thrust together under high contact pressure. The result is a low-temperature weld with an interface configuration consisting of a series of interlocking ripples. Since the bond strength is quite high, explosively clad plates can be subjected to a wide variety of subsequent processing, including further reduction in thickness by rolling. Because it is a solid-state welding process, numerous combinations of dissimilar metals can be joined.

Key Words

butt welding
cold welding
diffusion bonding
electrodes
embossed
explosive welding
faying surfaces
flash
forge welding
forge-seam welding
friction welding
friction-stir processing
friction-stir welding
inertia welding
lap joint
nugget
projection welding
resistance welding
resistance seam welding
resistance spot welding
rocker-arm machine
roll bonding
solid-state welding
spot-welding gun
transgun
ultrasonic welding

Review Questions

1. What are the two primary functions of the electrodes in resistance welding?
2. What are the two major roles of the applied pressure in resistance welding?
3. Why might resistance welding be considered as a form of solid-state welding?
4. Why is there no need for fluxes or shielding gases in resistance welding?
5. Based on the heat input equation, which term is most significant in providing heat—current, resistance, or time?
6. What are the three components that contribute to the total resistance between the electrodes?
7. What measures can be taken to reduce the resistance between the electrodes and the workpieces?
8. What are the possible consequences of too little pressure during the resistance-welding cycle? Too much pressure?
9. What is the ideal sequence for pressure application during resistance welding?
10. Why do the resistance-welding conditions become less favorable as the material heats and softens?
11. What magnitude of current may be used to produce resistance welds?
12. What is the simplest and most widely used form of resistance welding?
13. What is the typical size of a spot-weld nugget?
14. What are the two basic types of stationary spot-welding machines?
15. What is the major advantage of spot-welding guns?
16. What are some of the properties that must be possessed by resistance-welding electrodes?
17. What is the most common metal that is spot welded?
18. What is the practical limit of the thicknesses of material that can be readily spot welded?
19. What design features can be altered to permit the joining of different thicknesses or different conductivity metals?
20. What are the two methods used to produce resistance seam welds?
21. What two limitations of spot welding can be overcome by using the projection approach?
22. What limits the number of projection welds that can be formed in a single operation?
23. What are some of the attractive features of resistance welding when viewed from a manufacturing standpoint?
24. What are some of the primary limitations to the use of resistance welding?
25. What type of metallurgical problem might be encountered when spot welding medium- or high-carbon steels?
26. What were some of the limitations that made the forge welds of a blacksmith somewhat variable in terms of quality?
27. What features promote coalescence in cold welding?
28. Describe how the roll-bonding process can be used to fabricate products that contain pressure-tight, fluid-flow channels that once required the use of metal tubing.
29. How is inertia welding similar to friction welding? Different from friction welding?
30. How are surface impurities removed in the friction- and inertia-welding processes?
31. What are some of the geometric limitations of friction and inertia welding?
32. How does friction-stir welding differ from friction welding?
33. What are some of the attractive features of friction-stir welding?
34. What types of material or property modifications can be induced through friction-stir processing?
35. How do ultrasonic vibrations produce a weld?
36. What are some of the geometric limitations of ultrasonic welding?
37. What are some of the attractive features of ultrasonic welding?
38. What are the conditions necessary to produce high-quality diffusion welds?
39. How are surface contaminants removed during explosive welding?
40. If the interface of a weld is viewed in cross section, what is the distinctive geometric feature of an explosive weld?

Problems

1. Many advanced engineering products, as well as composite materials, require the joining of dissimilar materials. Select several of the processes discussed in this chapter and investigate the capability of the process to join dissimilar materials and the associated limitations.
2. Friction-stir processing is an interesting extension of friction-stir welding. Can you identify other examples of where a welding or joining process is currently being used for purposes other than those for which it was initially developed?

www.wiley.com/college/degarmo

Chapter 32 CASE STUDY

Field Repair to a Power Transformer

Electric power transformers do not operate at 100% efficiency and generally incorporate some means of cooling in their design. Large transformers are often submerged in oil-filled reservoirs, where the volume of oil provides a noncorrosive heat sink. In addition, it is not uncommon for additional features, such as horizontal cooling fins, to be added to the design to aid in dissipating heat from the reservoir.

The figure shows the exterior of a large transformer that has been installed in a rural, somewhat remote location. The reservoir housing has been constructed by welding low-carbon steel plates 9 and 12 mm ($\frac{3}{8}$ and $\frac{1}{2}$ in.) thick. While the transformer was in use, a service vehicle accidentally backed into the cooling-fin assembly, producing cracks in several of the fillet areas and a resulting loss of oil. Overheating occurred, and a repair is now necessary. Because of the size of the transformer, some form of on-site repair is preferred. It is your job to determine the procedure and make the necessary arrangements.

1. Consider the full spectrum of welding processes and identify candidates that might be appropriate for this task.
2. For each of the candidate processes, identify its primary advantages and limitations.
3. Which of the candidate processes would you recommend? Why?
4. Describe the procedure that you would outline for such a repair. Are there any special concerns or precautions?

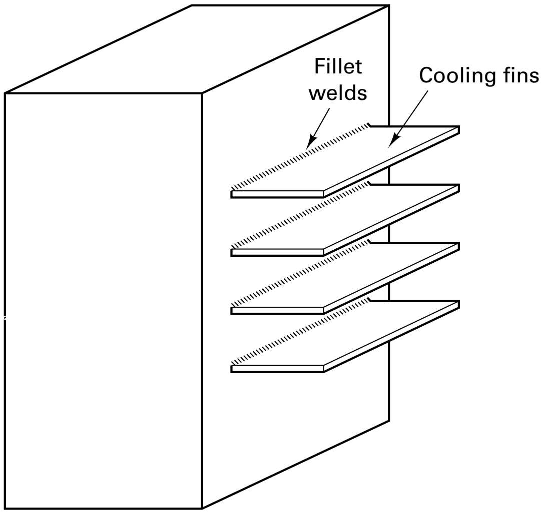

CHAPTER 33

OTHER WELDING PROCESSES, BRAZING AND SOLDERING

33.1 INTRODUCTION

We have already surveyed gas-flame and arc welding (Chapter 31), as well as resistance and solid-state joining processes (Chapter 32). Other processes within the realm of welding include some that are quite old (thermit welding) and others that are among the newest in manufacturing (laser and electron beam). These and several others will be presented here, along with a brief section devoted to the application of welding and welding-related processes to surfacing and thermal spray coating.

There are also many joining or assembly operations where welding may not be the best choice. Perhaps the heat of welding is objectionable, the materials possess poor weldability, welding is too expensive, or the joint involves thin or dissimilar materials. In such cases low-temperature joining methods may be preferred. These include brazing, soldering, adhesive bonding, and the use of mechanical fasteners. Brazing and soldering will be explored in this chapter, while adhesive bonding and mechanical fasteners are deferred to Chapter 34.

33.2 OTHER WELDING AND CUTTING PROCESSES

THERMIT WELDING

Thermit welding (TW) is an extremely old process in which superheated molten metal and slag are produced from an exothermic chemical reaction between a metal oxide and a metallic reducing agent. The name *thermit* usually refers to a mechanical mixture of about one part (by weight) finely divided aluminum and three parts iron oxide, plus possible alloy additions. When this mixture is ignited by a magnesium fuse (the ignition temperature is about 1150°C or 2100°F), it reacts according to the following chemical equation:

$$8Al + 3Fe_3O_4 \rightarrow 9Fe + 4Al_2O_3 + \text{heat}$$

The temperature rises to over 2750°C (5000°F) in about 30 seconds, superheating the molten iron, which then flows by gravity into a prepared joint, providing both heat and filler metal. Runners and risers must be provided, as in a casting, to channel the molten metal and compensate for solidification shrinkage.

Steels and cast irons can be welded using the process described above. Copper, brass, and bronze can be joined using a starting mixture of copper oxide and aluminum. Nickel, chromium, and manganese oxides have also been used in the thermit welding of more exotic metals.

Thermit welding has been replaced by alternative methods to a large degree. Nevertheless, it is still effective and can be used to produce economical, high-quality welds in thick sections of material, particularly in remote locations or where more sophisticated welding equipment is not available. One such application is the field repair of large steel castings that have broken or cracked.

ELECTROSLAG WELDING

Electroslag welding (ESW), depicted in Figure 33-1, is a very effective process for welding thick sections of steel plate. There is no arc involved (except to start the weld), so the process is entirely different from submerged arc welding, and the electrical resistance of the metal being welded plays no part in producing the heat. Instead, heat is derived from the passage of electrical current through a pool of electrically conductive liquid slag. Resistance heating raises the temperature of the slag to around 1750°C (3200°F). The molten slag then melts the edges of the pieces that are being joined, as well as continuously fed solid or flux-cored electrodes. Multiple electrodes are often used to provide an adequate supply of filler metal and maintain the molten pool. Under normal operating conditions, there is a 65-mm (2.5-in.)-deep layer of molten slag, which serves to protect and cleanse the underlying 12- to 20-mm ($^1/_2$ to $^3/_4$ in.)-deep pool of molten metal. These liquids are confined to the gap by means of sliding, water-cooled *molding plates* that are usually made of copper. As the weld metal solidifies at the bottom of the pool, the molding plates move upward at a rate that is typically between 12 and 40 mm/min ($^1/_2$ to $1^1/_2$ in./min).

Since a vertical joint provides the easiest geometry for maintaining a deep slag bath, the process is used most frequently in this configuration. Circumferential joints can also be produced in large pipe by using special curved slag-holder plates and rotating the pipe to maintain the welding area in a vertical position.

Because large amounts of weld metal and heat can be supplied, electroslag welding is the best of all the welding processes for making welds in thick plates. The thickness

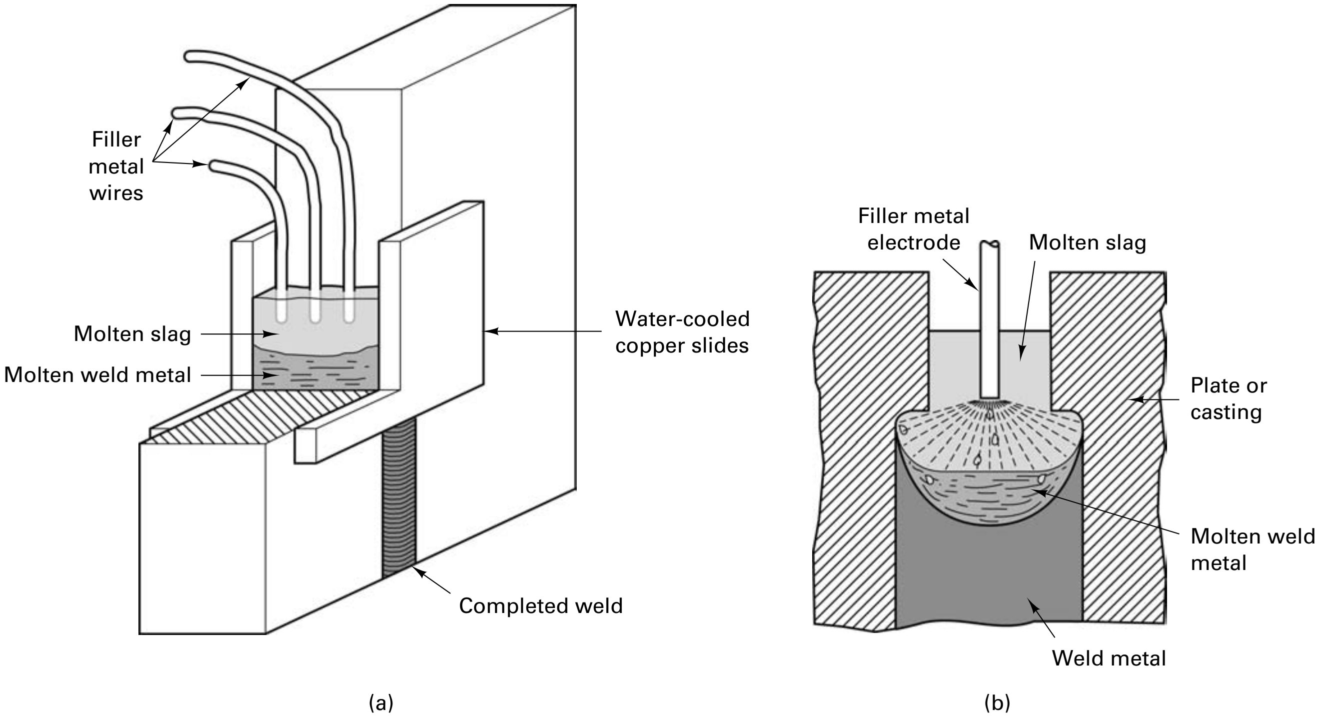

FIGURE 33-1 (a) Arrangement of equipment and workpieces for making a vertical weld by the electroslag process. (b) Cross section of an electroslag weld, looking through the water-cooled copper slide.

of the plates can vary from 12 to 900 mm ($^1/_2$ to 38 in.), and the length of the weld (amount of vertical travel) is almost unlimited. Edge preparation is minimal, requiring only squared edges separated by 25 to 35 mm. Applications have included building construction, shipbuilding, machine manufacture, heavy-pressure vessels, and the joining of large castings and forgings.

Solidification control is vitally important to obtaining a good electroslag weld, since slow cooling tends to produce a coarse grain structure. Cracking tendencies can be suppressed by adjusting the current, voltage, slag depth, number of electrodes, and electrode extension to produce a wide, shallow pool of molten metal. A large heat-affected zone and extensive grain growth are common features of the process. While these are undesirable metallurgical features, the long thermal cycle does serve to minimize residual stresses, distortion, and cracking in the heat-affected zone. Subsequent heat treatment of the welded structure may be necessary, however, if good fracture resistance is required.

ELECTRON-BEAM WELDING

In the *electron-beam welding* (EBW) process, the metal to be welded is heated by the impingement of a beam of high-velocity electrons. Originally developed for obtaining ultra-high-purity welds in reactive and refractory metals, the unique qualities of the process have led to a much wider range of applications.

Figure 33-2 presents the electron optical system. An electric current heats a tungsten filament to about 2200°C (4000°F), causing it to emit a stream of electrons by thermal emission. By means of a control grid, accelerating voltage, and focusing coils, these electrons are collected into a concentrated beam, accelerated, and directed to a focused

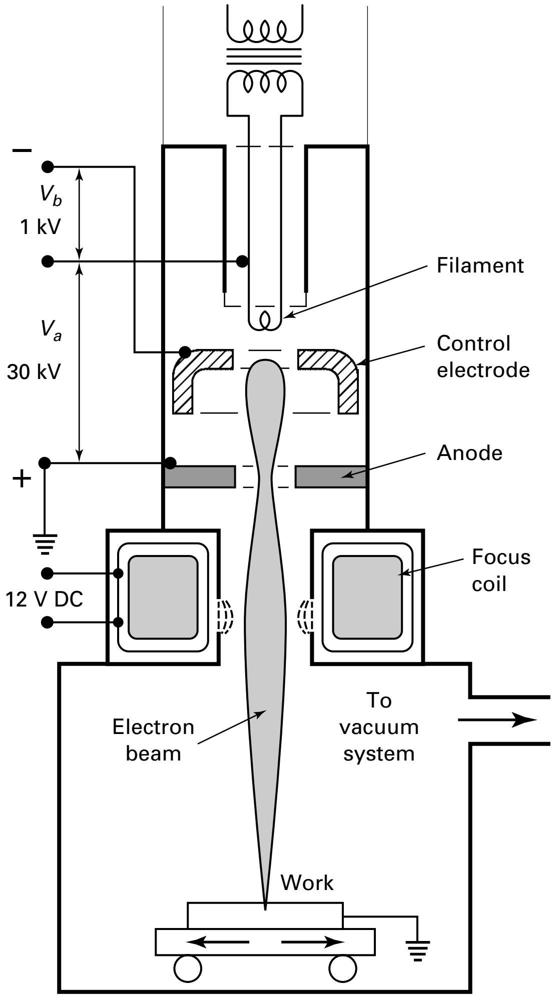

FIGURE 33-2 Schematic diagram of the electron-beam welding process.

spot between 0.8 and 3.2 mm. ($^1/_{32}$ to $^1/_8$ in.) in diameter. Since electrons accelerated at 150 kV achieve speeds nearly $^2/_3$ the speed of light, the electron beam is concentrated energy, capable of producing temperatures in excess of 1 million degrees Celsius when its kinetic energy is converted to heat. Since the beam is composed of charged particles, it can be positioned and moved by electromagnetic lenses. Unfortunately, the electrons cannot travel well through air. To be effective as a welding heat source, the beam must be generated and focused in a very high vacuum, typically at pressures of 0.01 Pa (1×10^{-4} mm Hg) or less.

In many operations, the workpiece must also be enclosed in the high-vacuum chamber, with provision for positioning and manipulation. The vacuum then ensures degasification and decontamination of the molten weld metal, and welds of very high quality are obtained. The size of the vacuum chamber, however, tends to impose serious limitations on the size of the workpiece that can be accommodated, and the need to break and reestablish the high vacuum as pieces are inserted and removed places a considerable restriction on productivity. As a consequence, electron-beam welding machines have been developed that operate at pressures considerably higher than those required for beam generation. Some permit the workpiece to remain outside the vacuum chamber, with the beam emerging through a small orifice in the vacuum chamber to strike an adjacent surface. High-capacity vacuum pumps are required to compensate for the leakage through the orifice. While these machines offer more production freedom, they do produce shallower, wider welds since the beam loses energy and diffuses as the pressure increases.

In general, two distinct ranges of accelerating voltage are employed in electron-beam welding. High-voltage equipment operates between 60 and 150 kV and produces a smaller spot size and greater penetration than does the lower-voltage type, which uses from 10 to 50 kV. Because of their high electron velocities, the high-voltage units emit considerable quantities of harmful X-rays and thus require expensive shielding and indirect viewing systems for observing the work. The X-rays produced by the low-voltage machines are sufficiently soft that the walls of the vacuum chamber absorb them, and the parts can be viewed directly through viewing ports.

Almost any metal can be welded by the electron-beam process, including those that are difficult to weld by other methods, such as zirconium, beryllium, and tungsten. Dissimilar metals, including those with extremely different melting points, can also be readily welded, since the intense beam will melt both metals simultaneously. Electron-beam welds typically exhibit a narrow profile and remarkable penetrations like those shown in Figure 33-3. The high power and heat concentrations can produce fusion zones with depth-to-width ratios up to 25:1. This is coupled with low total heat input, low distortion, and a very narrow heat-affected zone. Heat-sensitive materials can often be welded without damage to the base metal. Deep welds can be made in a single pass. High welding speeds are common; no shielding gas, flux, or filler metal is required; the process can be performed in all positions; and preheat or postheat is generally unnecessary.

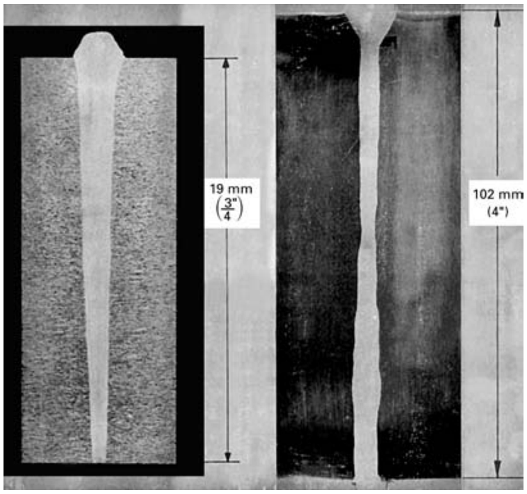

FIGURE 33-3 (Left to right) Electron-beam welds in 19-mm-thick 7079 aluminum and 102-mm-thick stainless steel. *(Courtesy of Hamilton Standard Division of United Technologies Corporation, Hartford, CT.)*

TABLE 33-1 Process Summary: Electron-Beam Welding (EBW)

Heat source	High-energy electron beam
Protection	Vacuum
Electrode	None
Material joined	All common metals
Rate of heat input	High
Weld Profile (D/W)	20
Maximum penetration	175 mm (7 in.)
Assets	High precision; high quality; deep and narrow welds; small HAZ, low distortion; fast welding speed; beam is easily positioned and deflected; no filler metal, flux, or shielding gas required
Limitations	Beam and target must be within a vacuum; very expensive equipment; work piece size is limited by the vacuum chamber; significant edge preparation and alignment required; requires safety protection from X-ray and visible radiation

On the negative side, the equipment is quite expensive, and extensive joint preparation is required. Because of the deep and narrow weld profile, joints must be straight and precisely aligned over the entire length of the weld. Machining and fixturing tolerances are often quite demanding. The vacuum requirements tend to limit production rate, and the size of the vacuum chamber may restrict the size of the workpiece that can be welded.

The electron-beam process is best employed where welds of extremely high quality are required or where other processes will not produce the desired results. Electron-beam welds often exhibit joint strength 15 to 25% greater than arc welds in the same material. The unique capabilities have resulted in its routine use in a number of applications, particularly in the automotive and aerospace industries. Table 33-1 provides a process summary for electron-beam welding.

LASER-BEAM WELDING

Laser beams can be used as a heat source for welding, hole making, cutting, cladding, and heat treating a wide variety of engineering metals. When used for *laser-beam welding* (LBW), the beam of coherent light can be focused to a diameter of 0.1 to 1.0 mm, providing a power density in excess of 10^6 watts/mm^2. The high-intensity beam can be used to simply melt the material at the joint, but more often, it produces a very narrow column of vaporized metal (a "keyhole") with a surrounding liquid pool. As the beam traverses, the liquid flows into the joint to produce a weld with a depth-to-width ratio generally greater than 5:1. Because of the narrow weld-pool geometry, high travel speed of the beam (typically several meters per minute), and low total heat input, the molten metal solidifies quickly, producing a very thin heat-affected zone and little thermal distortion. Finishing costs are quite low. Since welds require only one-side access, many different joint configurations are possible.

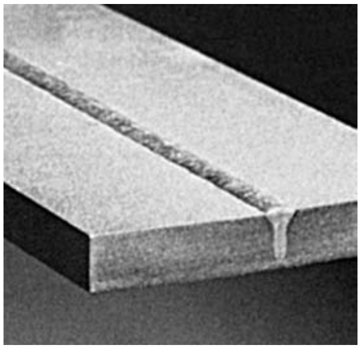

FIGURE 33-4 Laser butt weld of 3-mm (0.125-in.) stainless steel, made at 1.5 m/min with a 1250-watt laser. *(Courtesy of Coherent, Inc., Santa Clara, CA.)*

Laser-beam welding is most effective for simple fusion welds without filler metal (*autogenous welds*), but careful joint preparation is required to produce the narrow gap and necessary level of cleanliness. Filler metal can be added if the gap is excessive, and a low-velocity flow of inert gas (generally helium or argon) may be used to protect the weld pool from oxidation. Figure 33-4 shows a typical laser-beam weld, and Table 33-2 provides a process summary for laser-beam welding.

As shown in Figure 33-5, laser-beam welding and electron-beam welding both offer some of the highest power densities of the welding processes. The well-collimated beam of intense laser energy can produce deep penetration welds that are similar to electron-beam welds, but the laser-beam technique offers several distinct advantages:

1. The beam can be transmitted through air (i.e., a vacuum environment is not required). There is no physical contact between the welding equipment and the workpiece. The originating laser can be a considerable distance removed.

TABLE 33-2 Process Summary: Laser-Beam Welding (LBW)

Heat source	Laser light
Protection	None, or externally supplied gas
Electrode	None
Material joined	All common metals
Rate of heat input	High
Weld profile (D/W)	5
Maximum penetration	25 mm (1 in.)
Assets	High heat-transfer efficiency; can weld any location that is light-accessible; small HAZ; low distortion; can accurately focus the beam with light optics; high welding speed
Limitations	Possible problems with reflectivity of some metals; good positioning and fit-up required

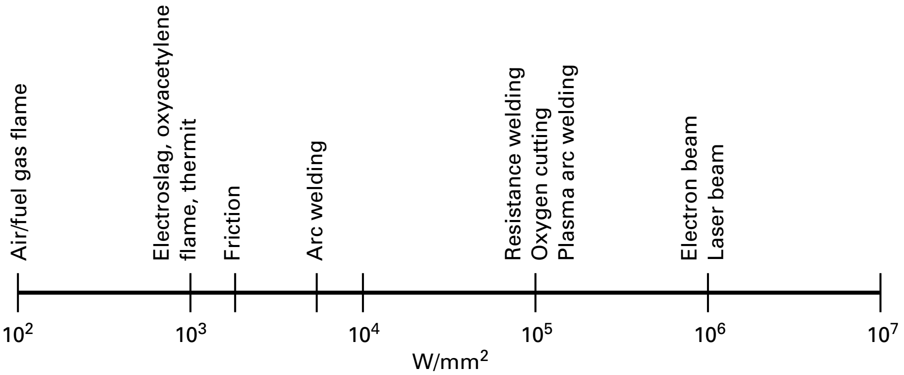

FIGURE 33-5 Comparison of the power densities of various welding processes. The high power densities of the electron-beam and laser-beam welding processes enable the production of deep, narrow welds with small heat-affected zones. Welds can be made quickly and at high travel speeds.

2. No harmful X-rays are generated.
3. The laser beam can be easily shaped, directed, and focused with both transmission and reflective optics (lenses and mirrors), and some beams can be transmitted through fiber-optic cables.
4. The only restriction on weld location is optical accessibility. Welds can be made in difficult-to-reach places, and materials can be joined within transparent containers, such as inside a vacuum tube.

A laser-welding system consists of an industrial laser, a means of guiding and focusing the beam, and a means of positioning and manipulating the parts to be welded. The traditional equipment for laser welding is a CO_2 laser with a power output range of 1.5 to 10 kW (or even higher). Because CO_2 lasers emit light with a far-infrared wavelength, they require mirror systems or special optical materials to focus and position the beam. They can be used to weld steel up to 25 mm (1 in.) thick at speeds ranging from 1 to 20 m/min. Nd:YAG (neodymium: yttrium–aluminum–garnet) lasers are more limited in power and capability but operate in a near-infrared wavelength that can utilize conventional glass lenses or delivery by flexible fiber-optic cable (as much as 3000 W of energy can be transmitted up to 150 m through a 0.6-mm-diameter fiber!).

The industrial lasers also lend themselves to automation and robotic manipulation. A single Nd:YAG laser with a fiber-optic system can distribute its beam to multiple workstations in either a simultaneous or time-sharing fashion, and the individual stations can be as much as 100 m (300 ft) from the laser. By using fiber-optic cables, laser energy can be piped directly to the end of a robot arm. This eliminates the need to mount and maneuver a heavy, bulky laser and, by reducing weight, enhances the speed and accuracy of both positioning and manipulation. Cutting, drilling, welding, and heat treating can all be performed with the same unit, and multiple axes of motion can provide a high degree of mobility and accessibility.

The equipment cost for a CO_2 or Nd:YAG laser-beam welding system is quite high, but this cost can be somewhat offset by the faster welding speeds, the ability to weld without filler metal, and low distortion, which enables a reduction in postweld straightening and machining. Caution should be used with such equipment, however, since reflected or scattered laser beams can be quite dangerous, even at great distances from the welding site. Eye protection is a must.

Because laser welds do not significantly reduce sheet metal formability, they have been used to produce tailored blanks for the production of sheet products. Different types of steel or different thicknesses can be joined to produce single-piece products with different properties at different locations. Laser welding has made great progress in the welding of aluminum alloys and has replaced gas tungsten arc welding or riveting in a number of applications.

With a sharply focused beam and short exposure times, laser welds can be very small and have a low total heat input, often on the order of 0.1 to 10 joules. These conditions are ideal for use in the electronics industry, and laser welding is frequently used to connect lead wires to small electronic components. Lap, butt, tee, and cross-wire configurations can all be used. It is even possible to weld wires without removing the polyurethane insulation. The laser simply evaporates the insulation and completes the weld with the internal wire.

Lasers have also been used in *hybrid processes* that combine laser welding with arc welding (GMAW, GTAW, or PAW), with both operating in one process zone and producing one weld pool. These hybrids combine the deep penetration, low distortion, and high-welding-speed features of laser welding with the wider pool, gap-bridging capability of arc welding. The resulting weld pool is wide and shallow at the surface, transitioning to deep and narrow. In addition to the unique and flexible weld-pool geometry, another benefit is the enhanced arc stabilization provided by the material that the laser evaporates. Laser power can be reduced from that required for lasers operating alone, and welds can be made faster than with just the arc-welding processes. The shielding gas from the arc-welding process protects the entire weld pool.

LASER-BEAM CUTTING

Cutting small holes, narrow slots, and closely spaced patterns in a variety of materials, or producing small quantities of complex-contoured sheet or plate, is another widely used application of industrial lasers. *Laser-beam cutting* (LBC) begins by “drilling” a hole through the material and then moving the beam along a programmed path. As shown in Figure 33-6, the intense heat from the laser is used to melt and/or evaporate the material being cut. A stream of *assist gas* blows the molten metal through the cut, cools the workpiece, minimizes the heat-affected zone, and may participate in a combustion reaction with the material being cut.

Oxygen is the usual gas for cutting mild steel. The laser heats the metal to a temperature where the iron and oxygen combine in an exothermic reaction. The molten iron and iron oxide have a low viscosity and are easily blown away by the flow of assist gas. In this exothermic cutting process, the assist gas actually contributes additional heat. High cutting speeds are possible, the speed being limited by the rate of material burning. Nitrogen is used with stainless steel and aluminum, and, because of its high reactivity, titanium requires an inert gas, such as argon. Inert gases or air are used when cutting nonmetallics. The latter processes are ones of endothermic cutting, since the gas actually absorbs energy as it is heated. Cutting speed is set by the rate at which the laser can melt and/or vaporize material. Exothermic cutting produces an oxidized edge, while endothermic cutting (or clean cutting) results in oxide-free surfaces.

Clean, accurate, square-edged cuts are characteristic of the laser cutting process, and the *kerf* (typically as small as 0.25 mm) and heat-affected zone are narrower than with any other thermal cutting process. No postcut finishing is required in many applications, even though the process does produce a thin recast surface. Figure 33-7 shows the edge of carbon steel that is 6 mm (0.25 in.) thick, laser cut at 1.8 m/min with a 1250-W laser.

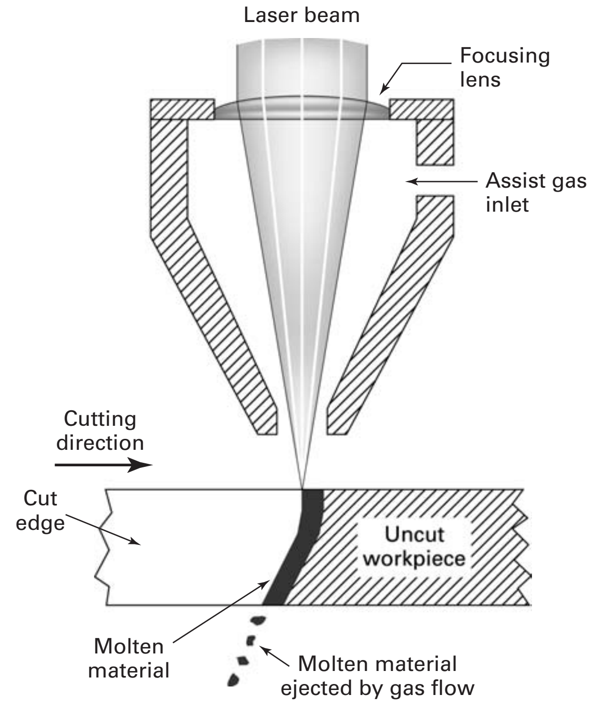

FIGURE 33-6 Schematic of laser-beam cutting. The laser provides the heat, and the flow of assist gas propels the molten droplets from the cut.

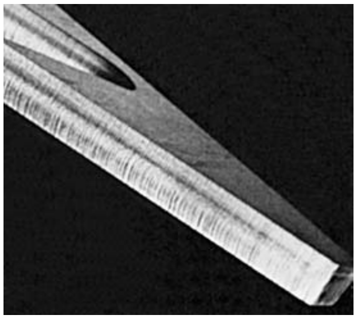

FIGURE 33-7 Surface of 6-mm-thick carbon steel cut with a 1250-watt laser at 1.8 m/min. *(Courtesy of Coherent, Inc., Santa Clara, CA.)*

CO_2 and YAG lasers have been used in both continuous and pulsed modes. While cutting speed depends on the material being cut and its thickness, it is greatest in the continuous mode that is preferred for straight and mildly contoured cuts. The pulsed mode is preferred for thin materials and enables tight corners and intricate details to be cut without excessive burning. Metal plates as well as a variety of nonmetals can be cut in thicknesses up to 30 mm ($1^1/_4$ in.). Cutting temperatures can be in excess of 11,000°C (20,000°F), and cutting speeds as high as 25 m/min have been observed with some nonmetals.

In addition to very common robotic applications, lasers have also been mounted on CNC-type machines or combined with traditional tools, such as punch presses, to produce extremely flexible hybrid equipment. Because no dedicated dies or tooling are required to produce a cut and there is no setup time, the laser is an economical alternative to blanking or nibbling for prototype or short-run products or for materials that are difficult to cut by conventional methods, such as plastics, wood, and composites.

Since lasers can cut a wide variety of metals and nonmetals, laser cutting has become a dominant process in the cutting of composite materials. The more uniform the thermal characteristics of the components, the better the cut and the less thermal damage to the material. Kevlar-reinforced epoxy cuts easiest and gives a narrow heat-affected zone. Glass-reinforced epoxy is more difficult because of the greater thermal differences, and graphite-reinforced epoxy is even worse because of the high dissociation temperature and thermal conductivity of the graphite. By the time the graphite has absorbed sufficient cutting heat, the epoxy matrix will have decomposed to a significant depth. The use of lasers for machining is discussed further in Chapter 27.

LASER SPOT WELDING

Lasers have also been used to produce spot welds in a manner that offers unique advantages when compared to the conventional resistance methods. A small clamping force is applied to ensure contact of the workpieces, and a fine-focused beam then scans the area of the weld. Welding is performed in the keyhole mode, where the laser produces a small hole through the molten puddle. As the beam is moved, molten metal flows into the hole and solidifies, forming a fusion-type nugget.

Laser spot welding can be performed with access to only one side of the joint. It is a noncontact process and produces no indentations. No electrodes are involved, so electrode wear is no longer a production problem. Weld quality is independent of material resistance, surface resistance, and electrode condition, and no water cooling is required. The total heat input is low, so the heat-affected zone is small. Speed of welding and strength of the resulting joint are comparable to resistance spot welds.

FLASH WELDING

Flash welding (FW) is a process used to produce butt welds between similar or dissimilar metals in solid or tubular form. The two pieces of metal are first secured in current-carrying grips and lightly touched together. An electric current may be passed through the joint to provide optional preheat, after which the pieces are withdrawn slightly. An intense flashing arc forms across the gap, which melts the material on both surfaces. The pieces are then forced together under high pressure (on the order of 70 MPa, or 10,000 psi), expelling the liquid and oxides, and upsetting the softened metal. The electric current is turned off, and the force is maintained until solidification is complete. If desired, the upset portion can then be removed by machining. Figure 33-8 shows a schematic of the flash-welding process, including both the equipment setup and the completed weld.

To produce a high-quality weld, it is important that the initial surfaces be flat and parallel so that the flashing is even across the area to be joined. The flashing action must be continued long enough to melt the interface and also soften the adjacent metal. Sufficient plastic deformation must occur during the upsetting to transfer the impurities and contaminants outward into the flash. The equipment required is generally large and expensive, but excellent welds can be made at high production rates.

Percussion welding (PEW) is a similar process, in which a rapid discharge of stored energy produces a brief period of arcing, which is followed by the rapid application of force to expel the molten metal and produce the joint. In percussion welding, the duration of the arc is on the order of 1 to 10 ms. The heat is intense but highly concentrated. Only a small amount of molten metal is produced, little or no upsetting occurs at the joint, and the heat-affected zone is quite small. Application is generally restricted to the butt welding of bar or tubing, where heat damage is a major concern.

Upset welding (UW) is also similar to flash welding, but there is no period of arcing. The equipment and geometries are similar, but the heating is achieved through electrical resistance. The parts are clamped in the machine, pressure is applied, and high current is passed through the joint. When the abutting surfaces have been heated to a suitable forging temperature, the current is stopped and an upsetting force is applied to produce coalescence. The initial conditions of interface flatness, finish, and alignment must create uniform contact if a good-quality weld is to be produced.

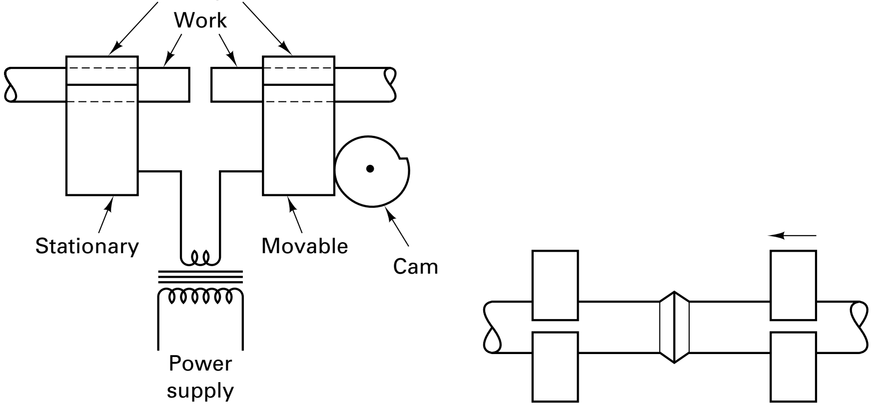

(a)

(b)

FIGURE 33-8 Schematic diagram of the flash-welding process. (a) Equipment and setup; (b) completed weld.

33.3 SURFACE MODIFICATION BY WELDING-RELATED PROCESSES

SURFACING (INCLUDING HARD FACING)

Surfacing or overlaying is the process of depositing a layer of weld metal on the surface or edge of a different-composition base material. The usual objectives are to obtain improved resistance to wear, abrasion, heat, or chemical attack, without having to make the entire piece from an expensive material, one that is difficult to fabricate, or one that would not possess the desired bulk properties. Since the deposited surfaces are generally harder than the base metal, the process is often called *hard facing*. This is not always true, however, for in some cases a softer metal (such as bronze) is applied to a harder base material.

Surfacing Materials. The materials most commonly used for surfacing include (1) carbon and low-alloy steels; (2) high-alloy steels and irons; (3) cobalt-based alloys; (4) nickel-based alloys, such as Monel, Nichrome, and Hastelloy; (5) copper-based alloys; (6) stainless steels; and (7) ceramic and refractory carbides, oxides, borides, silicides, and similar compounds.

Surfacing Methods and Applications. Since some of the base metal melts during the deposition, surfacing is actually a variation of fusion welding and can be performed by nearly all of the gas-flame or arc-welding techniques, including oxyfuel gas, shielded metal arc, gas metal arc, gas tungsten arc, submerged arc, and plasma arc. Arc welding is frequently used for the deposition of high-melting-point alloys. Submerged arc welding is used when large areas are to be surfaced or a large amount of surfacing material is to be applied. The plasma arc process further extends the process capabilities because of its extreme temperatures. To obtain true fusion of the surfacing material, a transferred arc is used and the surfacing material is injected in the form of a powder. If a nontransferred arc is used, only a mechanical bond is produced, and the process becomes a form of *metallizing*. Lasers can also be used in surfacing operations.

THERMAL SPRAY COATING OR METALLIZING

The *thermal spray* processes offer a means of applying a coating of high-performance material (metals, alloys, ceramics, intermetallics, cermets, carbides, or even plastics) to more economical and more easily fabricated base metals. A wire or rod of the coating material is fed into a gas flame or arc, where it melts and becomes atomized by a stream of gas, such as argon, nitrogen, combustion gases, or compressed air. The gas stream propels the 0.01- to 0.05-mm (0.0004- to 0.002-in.)-diameter particles toward the target surface, where they impact ("splat"), cool, and bond. Very little heat is transferred to the substrate, whose peak temperatures generally range from 100 to 250°C (200 to 500°F). As a result, thermal spraying does not induce undesirable metallurgical changes or excessive distortion, and coatings can be applied to thin or delicate targets or to heat-sensitive materials such as plastics. The applied coating can range in thickness from 0.1 to 12 mm (0.004 to 0.5 in.).

Several of the thermal spray processes use adaptations of oxyfuel welding equipment. Figure 33-9 shows a schematic of an oxyacetylene metal spraying gun designed to utilize a solid wire feed. The flame melts the wire and a flow of compressed air disintegrates the molten material and propels it to the workpiece. An alternative type of oxyfuel gun uses material in the form of powder, which is gravity or pressure fed into the flame, where it is melted and carried by the flame gas onto the target. The powder feed permits the deposition of material that would be difficult to fabricate into wire, such as cermets, oxides, and carbides. In addition, the droplet size is controlled by the powder, not by the factors that control atomization.

The lower temperatures and lower particle velocities of the oxyfuel deposition methods result in coatings with high porosity and low cohesive strength. An adaptation of the process known as high-velocity oxyfuel (HVOF) spraying propels the droplets with a supersonic stream of hot gas. Because the particles impact with high kinetic energies, the resulting coating is dense and well bonded.

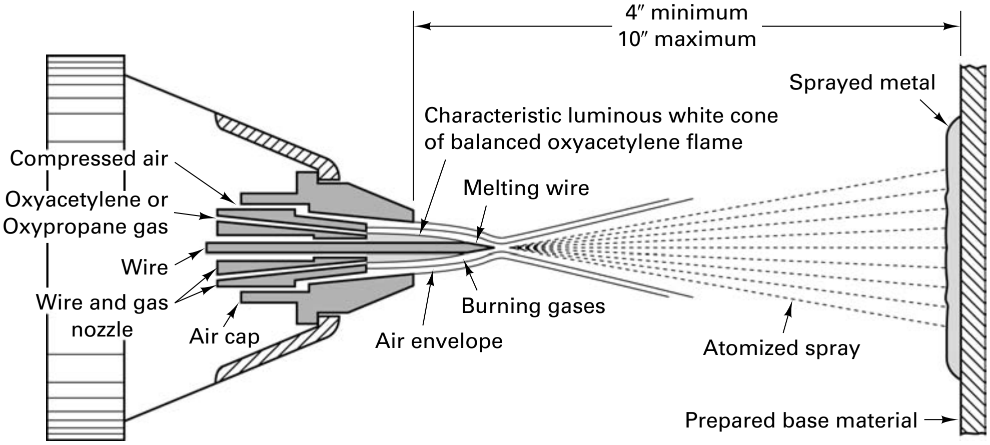

FIGURE 33-9 Schematic diagram of an oxyacetylene metal-spraying gun. *(Courtesy of Sulzer Metco, Winterthur, Switzerland.)*

The simplest of the electric arc methods is wire arc or electric arc spraying. Two oppositely charged electrode wires are fed through a gun, meeting at the tip, where they form an arc. A stream of atomizing gas flows through the gun, stripping off the molten metal to produce a high-velocity spray. Since all of the input energy is used to melt the metal, this process is extremely energy efficient.

Plasma spray metallizing, illustrated in Figure 33-10, is a more sophisticated technique. A plasma-forming gas serves as both the heat source and propelling agent for the coating material, which is usually fed in the form of powder. The molten particles attain high velocity and therefore produce a dense, strongly bonded coating. Since temperatures can reach 16,500°C (30,000°F), plasma spraying can be used to deposit materials with extremely high melting points. Metals, alloys, ceramics, carbides, cermets, intermetallics, and plastic-based powders have all been successfully deposited.

While thermal spraying or *metallizing* is similar to surfacing and is often applied for the same reasons, the coatings are usually thinner and the process is more suitable for irregular surfaces or heat-sensitive substrates. The deposition guns can be either handheld or machine-driven. A standoff distance of 0.15 to 0.25 m (6 to 10 in.) is usually maintained between the spray nozzle and the workpiece. Table 33-3 compares the features of five methods of thermal spray deposition.

Surface Preparation for Metallizing. Unlike surfacing, metallizing does not melt the base metal. Adhesion is entirely mechanical, so it is essential that the base metal be prepared in a way that promotes good mechanical interlocking. The target material must first be clean and free of dirt, moisture, oil, and other contaminants. The surface is then roughened by one of a variety of methods to create minute crevices that can anchor the solidifying particles. Grit blasting with a sharp, abrasive grit is the most common technique, and a surface roughness of 2.5 to 7.5 microns is adequate for most applications.

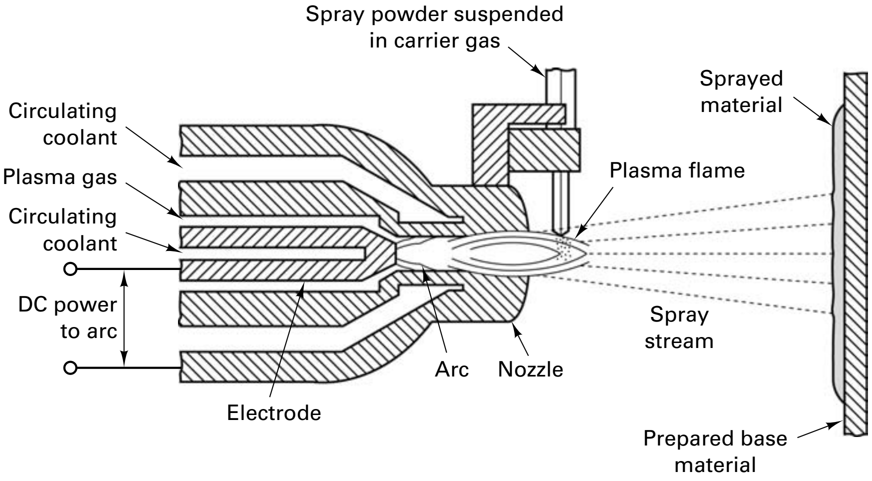

FIGURE 33-10 Diagram of a plasma-arc spray gun. *(Courtesy of Sulzer Metco, Winterthur, Switzerland.)*

TABLE 33-3 Comparison of Five Thermal Spray Deposition Techniques

Method	Heat		Deposited Materials	Particle Impact Velocity (m/sec)	Adhesion Strength	Maximum Spray Rate (kg/hr)
	Source	Temperature (°C)				
Flame spray						
Wire	Oxyfuel	3000	Metals	180	Medium	9
Powder	Oxyfuel	3000	Metals, ceramics, plastics	30	Low	7
High-velocity oxyfuel (HVOF)	Oxyfuel	3100	Metals, carbides	600–1000	Very high	14
Wire arc	DC arc	5500	Metals only	250	High	16
Plasma spray	DC arc	5500 to 16,500	All	250–1200	High to Very high	5-25

Characteristics and Applications of Sprayed Metals. During deposition, the atomized, molten, or semimolten particles mix with air and then cool rapidly upon impact with the base metal. The resultant coatings consist of bonded particles that span a range of size, shape, and degree of melting. Some particles become oxidized and interparticle voids can become entrapped. Compared to conventional wrought material, the coatings are harder, more porous (0.1 to 15% porosity), and more brittle. Thermal spray coatings add little, if any, additional strength to a part, since the strength of the porous coating is usually between one-third and one-half of its normal wrought strength. Applications, therefore, generally look to the coating to provide resistance to heat, wear, erosion, and/or corrosion, or to restore worn parts to original dimensions and specifications. Some typical applications include:

1. *Protective coatings.* Zinc and aluminum are sprayed on iron and steel to provide corrosion resistance—a process that may well extend the lifetime of bridges, buildings, and other infrastructure items. The interior surfaces of power boilers can be coated with high-chromium alloys to extend wall life by providing both heat-resistance and corrosion resistance.
2. *Building up worn surfaces.* Worn parts may be salvaged or their life extended by adding new metal to the depleted regions. The repair and restoration of aircraft engine components is probably the largest single use of thermal spraying.
3. *Hard surfacing.* Although metal spraying should not be compared to hard-facing deposits that are applied by welding techniques, it can be used when thin coatings are considered to be adequate. Typical applications might include automobile cylinder liners and piston rings; thread guides in textile plants; and critical parts within pumps, bearings, and seals.
4. *Applying coatings of expensive metals.* Metal spraying provides a simple method for applying thin coatings of noble metals to surfaces where conventional plating would not be economical.
5. *Electrical properties.* Because metal can be deposited on almost any surface, thermal spraying can be used to apply a conductive surface to an otherwise poor conductor or nonconductor. Copper, aluminum, or silver is frequently sprayed on glass or plastics for this purpose. Conversely, sprayed alumina (Al_2O_3) can be used to impart insulating or dielectric properties.
6. *Reflecting surfaces.* Aluminum, sprayed on the back of glass by a special fusion process, makes an excellent mirror.
7. *Decorative effects.* One of the earliest and still important uses of metal spraying was to obtain decorative effects. Because sprayed metal can be treated in a variety of ways, such as buffed, wire brushed, or left in the as-sprayed condition, it is frequently specified for finishing manufactured products and architectural materials.

8. *Tailored surface characteristics.* Porous coatings of cobalt or titanium alloys, or certain ceramic materials, have been applied to medical implants to help promote adhesion and in-growth of bone and tissue.

33.4 BRAZING

In brazing and soldering, the surfaces to be joined are first cleaned, the components assembled or fixtured, and a low-melting-point nonferrous metal is then melted, drawn into the space between the two solids by capillary action, and allowed to solidify. *Brazing* is the permanent joining of similar or dissimilar metals or ceramics (or composites based on those two materials) through the use of heat and a filler metal whose melting temperature (actually, liquidus temperature) is above 450°C (840°F)[1] but below the melting point (or solidus temperature) of the materials being joined. The brazing process is different from welding in a number of ways:

1. The *composition* (or chemistry) of the brazing alloy is significantly different from that of the base metal.
2. The *strength* of the brazing alloy is usually lower than that of the base metal.
3. The *melting point* of the brazing alloy is lower than that of the base metal, so none of the base metal is melted.
4. Bonding requires *capillary action* to distribute the filler metal between the closely fitting surfaces of the joint. The specific flow is dependent upon the viscosity of the liquid, the geometry of the joint, and surface wetting characteristics.

Because of these differences, the brazing process has several distinct advantages:

1. A wide range of metallic and nonmetallic materials can be brazed. The process is ideally suited for joining dissimilar materials, such as ferrous metal to nonferrous metal, cast metal to wrought metal, metals with widely different melting points, or even metal to ceramic.
2. Since less heating is required than for welding, the process can be performed quickly and economically.
3. The lower temperatures reduce problems associated with heat-affected zones (or other material property alteration), warping, and distortion. Thinner and more complex assemblies can be joined successfully. Thin sections can be joined to thick. Metal as thin as 0.01 mm (0.0004 in.) and as thick as 150 mm (6 in.) can be brazed.
4. Assembly tolerances are closer than for most welding processes, and joint appearance is usually quite neat.
5. Brazing is highly adaptable to automation and performs well when mass-producing complex or delicate assemblies. Complex products can also be brazed in several steps using filler metals with progressively lower melting temperatures.
6. A strong permanent joint is formed.

Successful brazing or soldering requires that the parts have relatively good fit-up (i.e., small joint clearances) to promote capillary flow of the filler metal. The parts must be thoroughly cleaned prior to joining, and many parts will require flux removal after joining. It is also important to remember that any subsequent heating of the assembly can cause inadvertent melting of the braze metal, thereby weakening or destroying the joint.

Another concern with brazed joints is their enhanced susceptibility to corrosion. Since the *filler metal* is of different composition from the materials being joined, the brazed joint is actually a localized galvanic corrosion cell. Corrosion problems can often be minimized, however, by proper selection of the filler metal.

NATURE AND STRENGTH OF BRAZED JOINTS

Brazing, like welding. forms a strong metallurgical bond at the interfaces. Clean surfaces, proper clearance, good wetting, and good fluidity will all enhance the bonding.

---

[1] This temperature is an arbitrary one, selected to distinguish brazing from soldering.

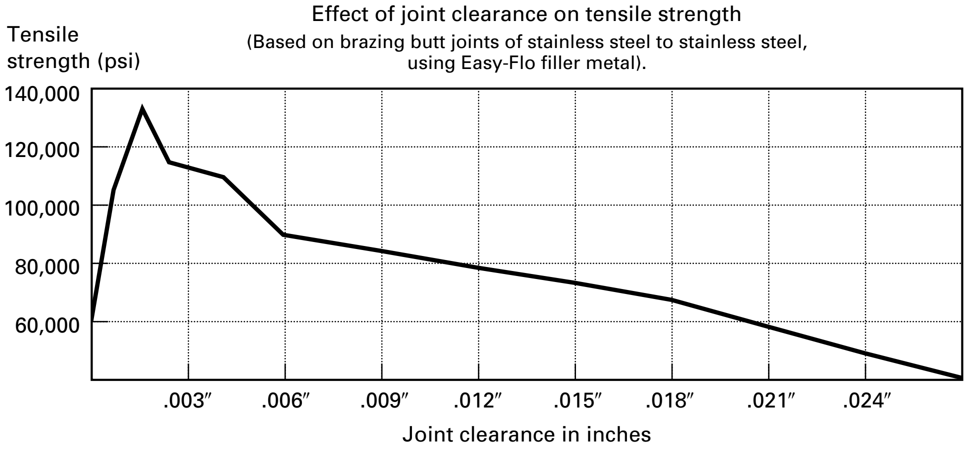

FIGURE 33-11 Typical variation of tensile strength with clearance in a butt-joint braze. *(Courtesy of Handy & Harman, Rye, NY.)*

The strength of the resulting joint can be quite high, certainly higher than the strength of the brazing alloy and often greater than the strength of the metal being brazed. Attainment of a high-strength joint, however, requires optimum processing and design.

Of all of the factors contributing to joint strength, *joint clearance* is the most important. If the joint is too tight, it may be difficult for the braze metal to flow into the gap (leaving unfilled voids), and flux may not be able to escape (remaining in locations that should be filled with braze material). There must be sufficient clearance for the braze metal to wet the joint and flow into it under the force of capillary action. As the gap is increased beyond an optimum value, however, the joint strength decreases rapidly, dropping off to the strength of the braze metal itself. If the gap becomes too great, the capillary forces may be unable to draw the material into the joint or hold it in place during solidification. Figure 33-11 shows the tensile strength of a butt-joint braze as a function of joint clearance.

Proper clearance can vary considerably, depending primarily on the type of braze metal being used. The ideal clearance is usually between 0.01 and 0.04 mm (0.0005 and 0.0015 in.), an “easy-slip” fit. A press fit can even be acceptable if fluxes are not used and surface roughness is sufficient to assure adequate flow of the filler metal into the joint. Clearances up to 0.075 mm (0.003 in.) can be accommodated with a more sluggish filler metal, such as nickel. When clearances range between 0.075 and 0.13 mm (0.003 and 0.005 in.), however, acceptable brazing becomes somewhat difficult, and joints with gaps in excess of 0.13 mm (0.005 in.) are almost impossible to braze. It should be noted that the specified gap should be maintained over the entire braze area—braze surfaces should be parallel.

It is also important to recognize that the dimensions cited above are the clearances that should exist *at the temperature of the brazing process*. Any effects of thermal expansion should be compensated when specifying the dimensions of the starting components. This is particularly significant when dissimilar materials are to be joined, for here the joint clearance will change as one material expands at a faster rate than the other. Consider a joint between brass and steel, like the one depicted in Figure 33-12. Brass expands more than steel when the temperature is increased. Therefore, if the insert tube is the brass component, the initial fit should be somewhat loose. The brass will expand more than the steel as the temperature is increased, and at the brazing temperature, the gap will assume the desired dimensions. Conversely, if a steel tube is to be inserted into a brass receiver, an initial force fit may be required since the interface will widen as the brass expands more than the steel. Problems can also occur when the reverse dimensional changes occur during cool-down. Significant residual stresses can form in the new joint, and tensile stresses can induce cracking.

Wettability is a strong function of the surface tensions between the braze metal and the base alloy. Generally, the wettability is good when the surfaces are clean and the two metals can form intermediate diffused alloys. Sometimes the wettability can be improved, as is done when steel is tin plated to accept a lead–tin solder, or plated with

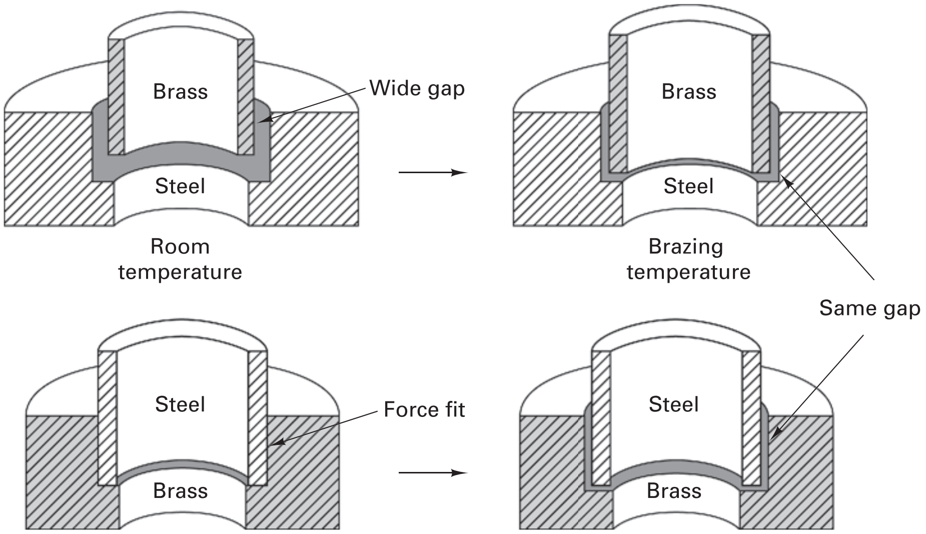

FIGURE 33-12 When brazing dissimilar metals, the initial joint clearance should be adjusted for the different thermal expansions (here brass expands more than steel). Proper brazing clearances should exist at the temperature where the filler metal flows.

nickel or copper to enhance brazing. *Fluidity* is a measure of the flow characteristics of the molten braze metal and is a function of the metal, its temperature, surface cleanliness, and clearance.

DESIGN OF BRAZED JOINTS

Because the strength of a braze filler metal is generally less than that of the metals being joined, a good joint design is required if one is to obtain adequate mechanical strength. The desired load-carrying ability is usually obtained by (1) ensuring proper joint clearance and (2) providing sufficient area for the bond. Figure 33-13 depicts the two most common types of brazed joints: *butt* and *lap*. Butt joints do not require additional thickness in the vicinity of the joint; they are most often used where the strength requirements are not that critical. The bonding area is limited to the cross-sectional area of the thinner or smaller member. In contrast, lap joints can provide bonding areas that are considerably larger than the butt configuration; they are often preferred when maximum strength is desired. If the joints are made very carefully, a lap of 1 to $1^1/_4$ times the material thickness can develop strength equal to that of the parent metal. For joints that are made by routine production, it is best to use a lap of 3 to 6 times the material thickness to ensure that failure will occur in the base metal, not in the brazed joint.

Variations of the two basic joint designs include the *butt-lap* and *scarf* configurations, shown in Figure 33-14. The butt-lap design is an attempt to combine the advantage of a uniform thickness with a large bonding area and companion high strength. Unfortunately, it also requires a higher degree of joint preparation. The scarf joint maintains uniform thickness and increases bonding area by tilting the butt joint interface. Careful joint preparation and component alignment is required to maintain the desired dimensions of joint clearance. Figure 33-14 shows relatively simple butt, lap, butt-lap, and scarf

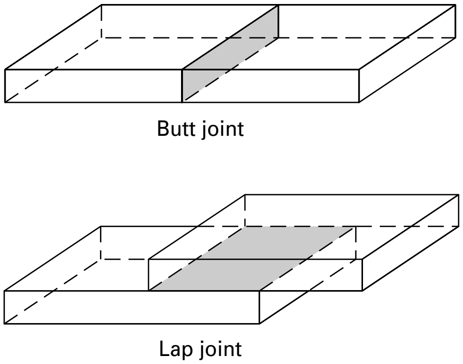

FIGURE 33-13 The two most common types of braze joints are butt and lap. Butt offers uniform thickness across the joint, whereas lap offers greater bonding area and higher strength.

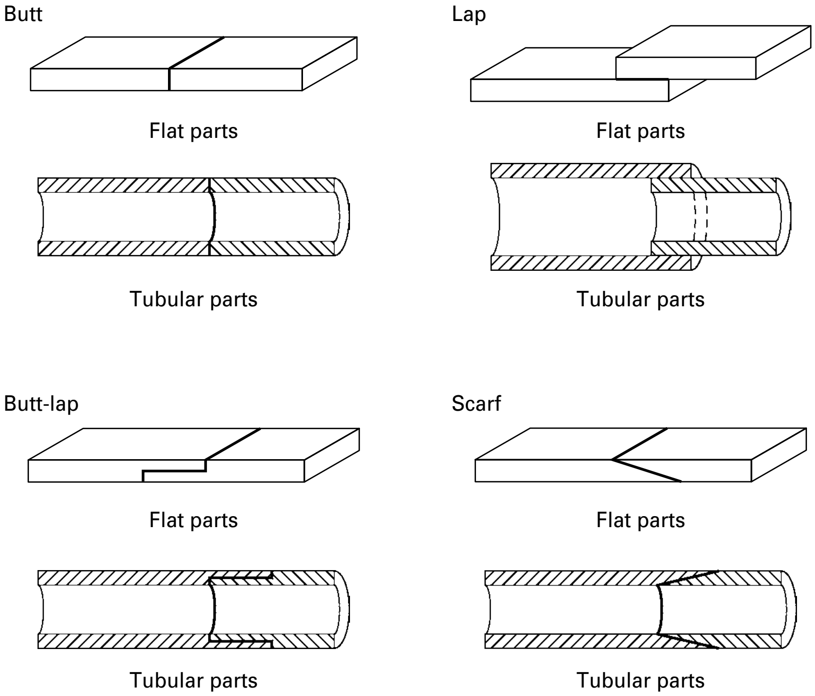

FIGURE 33-14 Variations of the butt and lap configurations include the butt-lap and scarf. The four types are shown for both flat and tubular parts.

joints for both flat and tubular parts. Figure 33-15 shows good brazing designs for a variety of joint configurations.

The materials being brazed also need to be considered when designing a brazed joint. Table 33-4 summarizes the compatibility of various engineering materials with the brazing process.

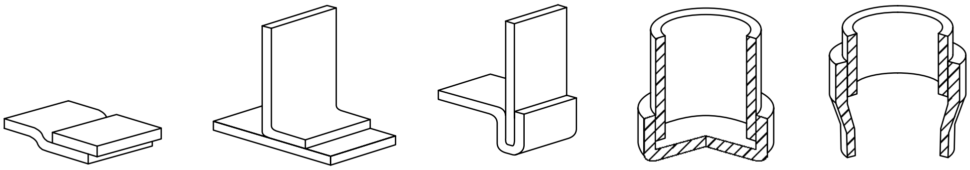

FIGURE 33-15 Some common joint designs for assembling parts by brazing.

TABLE 33-4 Compatibility of Various Engineering Materials with Brazing

Material	Brazing Recommendation
Cast iron	Somewhat difficult
Carbon and low-alloy steels	Recommended for low- and medium-carbon materials; difficult for high-carbon materials; seldom used for heat-treated alloy steels
Stainless steel	Recommended; silver and nickel brazing alloys are preferred
Aluminum and magnesium	Common for aluminum alloys and some alloys of magnesium
Copper and copper alloys	Recommended for copper and high-copper brasses; somewhat variable with bronzes
Nickel and nickel alloys	Recommended
Titanium	Difficult, not recommended
Lead and zinc	Not recommended
Thermoplastics, thermosets, and elastomers	Not recommended
Ceramics and glass	Not recommended
Dissimilar metals	Recommended, but may be difficult, depending on degree of dissimilarity
Metals to nonmetals	Not recommended
Dissimilar nonmetals	Not recommended

FILLER METALS

The filler metal used in brazing can be any metal that melts between 450°C (840°F) and the melting point of the material being joined. Actual selection, however, considers a variety of factors, including compatibility with the base materials, brazing-temperature restrictions, restrictions due to service or subsequent processing temperatures, the brazing process to be used, the joint design, anticipated service environment, desired appearance, desired mechanical properties (such as strength, ductility, and toughness), desired physical properties (such as electrical, magnetic, or thermal), and cost. In addition, the material must be capable of flowing through small capillaries, "wetting" the joint surfaces, and partially alloying with the base metals. The most commonly used brazing metals are copper and copper alloys, silver and silver alloys, and aluminum alloys. Many of the brazing alloys are based on eutectic reactions (see Chapter 4), where the material melts at a single temperature that is lower than the melting points of the individual metals in the alloy. Table 33-5 presents some common braze metal families, the metals they are used to join, and the typical brazing temperatures.

Copper and copper alloys are the most commonly used braze metals. Unalloyed copper is used primarily for brazing steel and other high-melting-point materials, such as high-speed steel and tungsten carbide. Its melting point is rather high (about 1100°C), and tight-fitting joints are required (gaps less than 0.075 mm). Copper–zinc alloys offer lower melting points and are used extensively for brazing steel, cast irons, and copper. Copper–phosphorus alloys are used for the fluxless brazing of copper since the phosphorus can reduce the copper oxide film. These alloys should not be used with ferrous or nickel-based materials, however, since they form brittle compounds with phosphorus and the resulting joints may be brittle. Manganese bronzes can also be used as filler metal in brazing operations.

Pure silver can be used for brazing titanium. *Silver solders* (alloys based on silver and copper) have brazing temperatures significantly below that of pure copper and are used in joining steels, copper, brass, and nickel. While silver and silver alloys are expensive, only a small amount is required to make a joint, so the cost per joint is still low.

Aluminum–silicon alloys, containing between 6 and 12% silicon, are used for brazing aluminum and other aluminum alloys. By using a braze metal that is similar to the base metal, the possibility of galvanic corrosion is reduced. These brazing alloys, however, have melting points of about 610°C (1130°F), and the melting temperature of commonly brazed aluminum alloys, such as 3003, is around 670°C (1290°F). Therefore, control of the brazing temperature is critical. In brazing aluminum, proper fluxing action, surface cleaning, and/or the use of a controlled atmosphere or vacuum environment is required to assure adequate flow of the braze metal.

Nickel- and cobalt-based alloys are attractive for joining assemblies that will be subjected to elevated-temperature service conditions and/or extremely corrosive environments. The service temperature for brazed assemblies can be as high as 1200°C (2200°F). Gold and palladium alloys offer outstanding oxidation and corrosion resistance, as well as good electrical and thermal conductivity. Magnesium alloys can be used to braze other types of magnesium.

TABLE 33-5 Some Common Braze Metal Families, Metals They Are Used to Join, and Typical Brazing Temperatures

Braze Metal Family	Materials Commonly Joined	Typical Brazing Temperature (°C)
Aluminum-silicon	Aluminum alloys	565–620
Copper and copper alloys	Various ferrous metals as well as copper and nickel alloys and stainless steel	925–1150
Copper-phosphorus	Copper and copper alloys	700–925
Silver alloys	Ferrous and nonferrous metals, except aluminum and magnesium	620–980
Precious metals (gold-based)	Iron, nickel, and cobalt alloys	900–1100
Magnesium	Magnesium alloys	595–620
Nickel alloys	Stainless steel, nickel, and cobalt alloys	925–1200

A variety of brazing alloys are currently available in the form of amorphous foils, formed by cooling metal at extremely rapid rates. These foils are extremely thin (0.04 mm or 0.0015 in. being typical) and exhibit excellent ductility and flexibility, even when they are made from alloys whose crystalline form is quite brittle. Shaped inserts can be cut or stamped from the foil and inserted into the joint region. Since the braze material is fully dense, no shrinkage or movement occurs during the brazing operation.

One amorphous alloy, composed of nickel, chromium, iron, and boron, is used to produce assemblies that can withstand high temperatures. During the brazing operation, the boron diffuses into the base metal, raising the melting point of the remaining filler. The brazed assembly can then be heated to temperatures above the melting point of the original braze alloy, and the brazed joint will not melt.

FLUXES

In a normal atmosphere, the heat required to melt the brazing alloy would also cause the formation of surface oxides that oppose the wetting of the surface and subsequent bonding. *Brazing fluxes*, therefore, play an important part in the process by (1) dissolving oxides that may have formed on the surfaces prior to heating, (2) preventing the formation of new oxides during heating, and (3) lowering the surface tension between the molten brazing metal and the surfaces to be joined, thereby promoting the flow of the molten material into the joint. Ideally, the flux will melt and become active at a temperature below the solidus of the filler metal yet remain active throughout the entire range of temperatures encountered while making the braze.

Surface cleanliness is one of the most significant factors affecting the quality and uniformity of brazed joints. Although fluxes can dissolve modest amounts of oxides, *they are not cleaners*. Before a flux is applied, dirt, grease, oil, rust, and heat-treat scale should be removed from the surfaces that are to be brazed. Cleaning operations can involve water- or solvent-based techniques; high-temperature burn-off of oils, greases, and fuel residues; acid pickling; grit blasting with selected media; other mechanical methods; or exposure to high-temperature reducing atmospheres. The less cleaning the flux has to do, the more effective it will be during the brazing operation. Because the presence of surface graphite impairs wetting, cast iron materials often require special treatment. Graphite removal by chemical etching may be required before cast iron can be brazed.

Brazing fluxes usually take the form of chemical compounds in which the most common ingredients are borates, fused borax, fluoroborates, fluorides, chlorides, acids, alkalies, wetting agents, and water. The particular flux should be selected for compatibility with the base metal being brazed and the particular process being used. Paste fluxes are utilized for furnace, induction, and dip brazing, and they are usually applied by brushing. Either paste or powdered fluxes can be used with the torch-brazing process, where application is usually achieved by dipping the heated end of the filler wire into the flux material.

APPLYING THE BRAZE METAL

The brazing filler metal can be applied to joints in several ways. The oldest method (and still a common technique when torch brazing) uses brazing metal in the form of a rod or wire. The joint area is first heated to a temperature high enough to melt the braze alloy and ensure that it remains molten while flowing into the joint. The torch is then used to melt the braze metal, and capillary action draws it into the prepared gap.

The above method of braze metal application requires considerable labor, and care must be taken to ensure that the filler metal has flowed into the inner portions of the joint. To avoid these difficulties, the braze metal is often inserted into the joint prior to heating, usually in the form of wires, foils, shims, powders, or preformed rings, washers, disks, or slugs. Rings or shims can also be fitted into internal grooves in the joint before the parts are assembled.

When using preloaded joints, care must be exercised to ensure that the filler metal is not drawn away from the intended surface by the capillary action of another surface of contact. Capillary action will always pull the molten braze metal into the smallest clearance, regardless of whether that was the intended location. In addition, the flow of filler metal must not be cut off by inadequate clearances or the presence of entrapped or escaping air. Fillets and grooves within the joint can also act as reservoirs and trap the filler metal.

Yet another approach is to precoat one or both of the surfaces to be joined with the brazing alloy. Simply placing the materials in contact and heating forms the desired bond. By having the braze material already in place over the full area of contact, the joining operation does not have to rely on capillary action and metal flow. More complex assemblies can be produced than with conventional methods, and the thickness of the braze material is precisely controlled to provide maximum strength to the joint.

All of the components must maintain fixed positions during the brazing operation, and some form of restraint or fixturing is often required. Alignment and clearances can often be maintained by tack welding, riveting, staking, expanding or flaring, swaging, knurling, or dimpling. Shims, wires, ribbons, and screens can also be employed to assist in locating pieces or maintaining fit. For more complex components, special brazing *jigs and fixtures* are often used to hold the components during the heating. When these are used, however, it is necessary to provide springs that will compensate for thermal expansion, particularly when two or more dissimilar metals are being joined.

HEATING METHODS USED IN BRAZING

Since molten metal tends to flow toward the location of highest temperature, it is important that the heat sources used in brazing control both the temperature and the uniformity of that temperature throughout the joint. In specifying the heating method, a number of factors should be considered, including the size and shape of the parts being brazed, the type of material being joined, and the desired quantity and rate of production.

A common source of heat for brazing is a gas-flame torch. In the *torch-brazing* procedure, oxyacetylene, oxy-hydrogen, or other gas-flame combinations can be used. Most repair brazing is done in this manner because of its flexibility and simplicity, but the process is also widely used in production applications where specially shaped torches speed the heating and reduce the amount of skill required. Local heating permits the retention of most of the original material strength and enables large components to be joined with little or no distortion. The major drawbacks are the difficulty in controlling the temperature and maintaining uniformity of heating, as well as meeting the cost of skilled labor. A protective flux is usually required, and the flux residue must be removed after brazing.

If the flux and filler metal can be preloaded into the joints and the part can endure uniform heating, a number of assemblies can be brazed simultaneously in controlled-atmosphere or vacuum furnaces, a process known as *furnace brazing*. If the components are not likely to maintain their alignment, brazing jigs or fixtures must be used. Fortunately, for most assemblies that are to be furnace brazed, a light press fit is usually sufficient to maintain alignment. Figure 33-16 shows some typical furnace-brazed assemblies.

Because excellent control of the furnace temperature is possible and no skilled labor is required, furnace brazing is particularly well suited for mass-production operations, with either batch- or continuous-type furnaces being used. Furnace brazing heats the entire assembly in a uniform manner and therefore produces less warpage and distortion than processes that employ localized heating. Extremely complex assemblies can be produced, with multiple joints being formed in a single heating.

A variety of furnace atmospheres can be utilized to reduce oxide films and prevent both the base and filler metals from oxidizing during the brazing operation. A chemical flux may no longer be needed, and the parts emerge clean and free of contaminants. When reactive materials are to be joined or the joint must meet the highest of standards, a vacuum furnace may be preferred.

A third type of heating is *salt-bath brazing*, where the parts are preheated and then dipped in a bath of molten salt that is maintained at a temperature slightly above the melting point of the brazing metal. This process offers three distinct advantages:

1. The salt bath acts as the brazing flux, preventing oxidation and enhancing wettability.
2. The work heats very rapidly because it is in complete contact with the heating medium.

FIGURE 33-16 Typical furnace-brazed assemblies. *(Courtesy of Pacific Metals Company, a division of Reliance Steel & Aluminum, Los Angeles, CA.)*

3. Temperature can be accurately controlled, so thin pieces can be attached to thicker pieces without danger of overheating. This last feature makes the process well suited for brazing aluminum, where precise temperature control is often required.

In salt-bath brazing, the parts must be held in jigs or fixtures (or be prefastened in some manner), and the brazing metal must be preloaded into the joints. To assure that the bath remains at the desired temperature during the immersion process, its volume must be substantially larger than that of the assemblies to be brazed.

In *dip brazing* the assemblies are immersed in a bath of molten brazing metal. The bath thus provides both the heat and the metal for the joint. Since the braze metal will usually coat the entire workpiece, it is a somewhat wasteful process and is usually employed only for small products.

Induction brazing utilizes high-frequency induction currents as the source of heat and is therefore limited to the joining of electrically conductive materials. A variety of high-frequency AC power supplies is available in large and small capacities. These are coupled to a simple heating coil designed to fit around the joint. The heating coils are generally formed from copper tubing and typically carry a supply of cooling water. Although the filler metal can be added to the joint manually after it is heated, the usual practice is to use preloaded joints to speed the operation and produce more uniform bonds. Induction brazing offers the following advantages, which account for its extensive use:

1. The complete heating cycle is very rapid, usually only a few seconds in duration.
2. The operation can be made semiautomatic so that only semiskilled labor is required.
3. Heating can be confined to the specific area of the joint through use of specially designed coils, frequency control, and short heating times. This minimizes softening and distortion and reduces problems associated with scale and discoloration.
4. Uniform results are easily obtained.
5. By making new and relatively simple heating coils, a wide variety of work can be brazed with a single power supply.

Resistance brazing can be used to produce relatively simple joints in metals with high electrical conductivity. The parts to be joined are pressed between two electrodes and a current is passed through. Unlike resistance welding, the carbon or graphite electrodes provide most of the resistance in resistance brazing, and the heating of the joint is primarily by conduction from the hot electrodes.

Infrared heat lamps, lasers, and electron beams can also be used to provide the heat required for brazing. Recent studies have also shown microwave energy to be an efficient heat source. Silicon carbide plates are positioned around the joint and are heated by the microwaves. Heat is then transferred to the joint by radiation.

FLUX REMOVAL AND OTHER POSTBRAZE OPERATIONS

Since most brazing fluxes are corrosive, the flux residue should be removed from the work as soon as brazing is completed. Rapid and complete flux removal is particularly important in the case of aluminum, where chlorides can be particularly detrimental. Fortunately, many brazing fluxes are water soluble, and an immersion in a hot-water tank for a few minutes will often provide satisfactory results. Blasting with grit or sand is another effective method of flux removal, but this procedure may not be attractive if a good surface finish is to be maintained. Fortunately, such drastic treatment is seldom necessary.

Other postbraze operations may include heat treating, cleaning, and inspection. A visual examination is probably the simplest of the inspection techniques and is most effective when both sides of a brazed joint are accessible for examination. A proof test can be performed by subjecting the joint to loads in excess of those expected during service. Leak tests or pressure tests can assure gas- or liquid-tightness. Cracks and other flaws can be detected by dye penetrant, magnetic particle, ultrasonic, or radiographic examination. Destructive forms of evaluation include peel tests, tension or shear tests, and metallographic examination.

FLUXLESS BRAZING

Since the application and removal of brazing flux involves significant costs, particularly where complex joints and assemblies are involved, a large amount of work has been devoted to the development of procedures where a flux is not required. Controlled furnace atmospheres can make a flux unnecessary by reducing existing oxides and preventing the formation of new ones. Vacuum furnaces can also be used to create and preserve clean brazing surfaces. Special brazing metals have been developed with alloy additions, such as phosphorus, that can also fulfill the role of a flux.

BRAZE WELDING

Braze welding differs from straight brazing in that capillary action is not required to distribute the filler metal. Here the molten filler is simply deposited by gravity, as in oxyacetylene gas welding. Because relatively low temperatures are required and warping is minimized, braze welding is very effective for the repair of steel products and ferrous castings. It is also attractive for joining cast irons since the low heat does not alter the graphite shape, and the process does not require good wetting characteristics. Strength is determined by the braze metal being used and the amount applied. Considerable buildup may be required if full strength is to be restored to the repaired part.

Braze welding is almost always done with an oxyacetylene torch. The surfaces are first "tinned" with a thin coating of the brazing metal, and the remainder of the filler metal is then added. Figure 33-17 shows a schematic of braze welding.

■ 33.5 SOLDERING

Soldering is a brazing-type operation where the filler metal has a melting temperature (or liquidus temperature if the alloy has a freezing range) below 450°C (840°F). It is typically used for joining thin metals, connecting electronic components, joining metals while avoiding

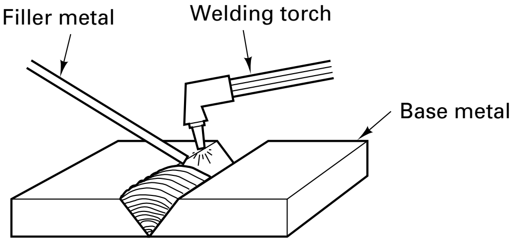

FIGURE 33-17 Schematic of the braze-welding process.

exposure to high elevated temperatures, and filling surface flaws and defects. The process generally involves six important steps: (1) design of an acceptable joint; (2) selection of the correct solder for the job; (3) selection of the proper type of flux; (4) cleaning of the surfaces to be joined; (5) application of flux, solder, and sufficient heat to allow the molten solder to fill the joint by capillary action and solidify; and (6) removal of the flux residue.

DESIGN AND STRENGTH OF SOLDERED JOINTS

Soldering can be used to join a wide variety of sizes, shapes, and thicknesses; it is employed extensively to provide electrical coupling or gas- or liquid-tight seals. While the low joining temperatures are attractive for heat-sensitive materials, soldered joints seldom develop shear strengths in excess of 1.75 MPa (250 psi). Consequently, if appreciable strength is required, soldered joints should be avoided, the contact area should be large, or some form of mechanical joint, such as a rolled-seam lock, should be made prior to soldering. Butt joints should never be used, and designs where peeling action is possible should be avoided. Figure 33-18 shows some of the more common solder joint designs, including lap, flanged butt, and interlock.

As with brazing, there is an optimal clearance for best performance. For typical solder joints, a clearance of 0.025 to 0.13 mm (0.001 to 0.005 in.) provides for capillary flow of the solder, expulsion of the flux, and reasonable joint strength. In addition, the parts should be held firmly so that no movement can occur until the solder has cooled to well below the solidification temperature. Otherwise, the resulting joint may contain cracks and have very little strength.

METALS TO BE JOINED

Table 33-6 summarizes the compatibility of soldering with a variety of engineering materials. Copper, silver, gold, and tin-plated steels are all easily soldered. Aluminum has a strong, adherent oxide that makes soldering difficult. Special fluxes and modified techniques may be required, but adequate joints are indeed possible, as shown by the large number of soldered aluminum radiators currently in automotive use.

SOLDER METALS

Soldering alloys, the filler metals for soldering, are generally combinations of low-melting-temperature metals, such as lead, tin, bismuth, indium, cadmium, silver, gold, and germanium. Because of their low cost, acceptable mechanical and physical properties, and many years of use, the most common solders are alloys of lead and tin with the addition of small amounts of antimony, usually less than 0.5%. The three most common alloys contain 60, 50, and 40% tin, and all melt below 240°C (465°F). Because tin is expensive, those alloys having higher proportions of tin are used only where their higher fluidity, higher strength, and lower melting temperature are desired. For wiped joints and for filling dents and seams, where the primary desire is appearance and little strength is required, solders containing only 10 to 20% tin are preferred. Joints made with the 5%

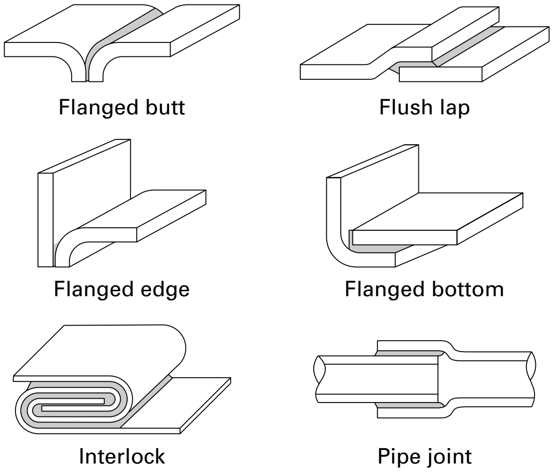
Flanged butt
Flush lap
Flanged edge
Flanged bottom
Interlock
Pipe joint

FIGURE 33-18 Some common designs for soldered joints.

TABLE 33-6 Compatibility of Various Engineering Materials with Soldering

Material	Soldering Recommendation
Cast iron	Seldom used since graphite and silicon inhibit bonding
Carbon and low-alloy steels	Difficult for low-carbon materials; seldom used for high-carbon materials
Stainless steel	Common for 300 series; difficult for 400 series
Aluminum and magnesium	Seldom used; however, special solders are available
Copper and copper alloys	Recommended for copper, brass, and bronze
Nickel and nickel alloys	Commonly performed using high-tin solders
Titanium	Seldom used
Lead and zinc	Recommended, but must use low-melting-temperature solders
Thermoplastics, thermosets, and elastomers	Not recommended
Ceramics and glass	Not recommended
Dissimilar metals	Recommended, but with consideration for galvanic corrosion
Metals to nonmetals	Not recommended
Dissimilar nometals	Not recommended

tin alloy require higher temperatures to produce but will withstand service temperatures as high as 150°C (300°F).

Other soldering alloys may be specified for special purposes or where environmental or health concerns dictate the use of lead-free joints. Lead and lead compounds can be quite toxic. Since 1988, the use of lead-containing solders in drinking water lines has been prohibited in the United States, and concern has been expressed regarding other applications and industries. Japan and the European Union have banned the use of lead-containing solders in electronic equipment. If substitute solders are to be acceptable, however, they should not only be harmless to the environment, but should also exhibit desirable characteristics in the areas of melting temperature, wettability, electrical and thermal conductivity, thermal-expansion coefficient, mechanical strength, ductility, creep resistance, thermal fatigue resistance, corrosion resistance, manufacturability, and cost. At present, none of the *lead-free solders* meet all of these requirements, and most are deficient in more than one area. Compatible fluxes must also be identified, and assembly methods may need to be modified.

Most of the alternative solders have been proposed from other eutectic alloy systems. Tin–antimony and tin–copper alloys are useful in electrical applications and have good strength and creep resistance but high melting points. Bismuth alloys have very low melting points and good fluidity but suffer from poor wettability. Indium alloys offer low melting points, ductility that is retained even at cryogenic temperatures, and rapid creep that allows joints between dissimilar metals to adjust to changes in temperature without generating internal stresses. Tin–indium alloys have been used to join metal to glass and glass to glass. They have very low melting points and good wettability, but they are expensive and can be somewhat brittle. Aluminum is often soldered with tin–zinc, cadmium–zinc, or aluminum–zinc alloys. Tin–silver and tin–gold offer possibilities when a somewhat higher melting point is desired (typically above 205°C, or 400°F) coupled with good mechanical strength and creep resistance, but both systems are limited by the high cost of their components. Lead–silver and cadmium–silver alloys can also be used for higher-temperature service. The three-component tin–silver–copper system has received considerable attention for electronics applications.

Like the filler metal used in brazing and braze welding, solders are available as wire and paste, as well as in a variety of standard and special preshaped forms. Table 33-7 presents some of the more common solder alloys with their melting properties and typical applications.

SOLDERING FLUXES

As in brazing, soldering requires that the metal surfaces be clean and free of oxide so that the solder can wet the surfaces and be drawn into the joint to produce an effective bond. Soldering fluxes are used to remove surface oxides and prevent oxide formation

TABLE 33-7 Some Common Solders and Their Properties

Composition (wt %)	Freezing Temperature (°C)			
	Liquidus	Solidus	Range	Applications
Lead-tin solders				
98 Pb–2 Sn	322	316	6	Side seams in three-piece can
90 Pb–10 Sn	302	268	34	Coating and joining metals
80 Pb–20 Sn	277	183	94	Filling and seaming auto bodies
70 Pb–30 Sn	255	183	72	Torch soldering
60 Pb–40 Sn	238	183	55	Wiping solder, radiator cores, heater units
50 Pb–50 Sn	216	183	33	General purpose
40 Pb–60 Sn	190	183	7	Electronic (low temperature)
Silver solders				
97.5 Pb–1 Sn–1.5 Ag	308	308	0	Higher–temperature service
36 Pb–62 Sn–2 Ag	189	179	10	Electrical
96 Sn–4 Ag	221	221	0	Electrical
Other alloys				
45 Pb–55 Bi	124	124	0	Low temperature
43 Sn–57 Bi	138	138	0	Low temperature
95 Sn–5 Sb	240	234	6	Electrical
50 Sn–50 In	125	117	8	Metal-to-glass
37.5 Pb–25 In–37.5 Sn	138	138	0	Low temperature
95.5Sn–3.9 Ag–0.6 CO	217	217	0	Electrical

during the soldering process, but it is essential that dirt, oil, and grease be removed before the flux is applied. This precleaning or surface preparation can be performed by a variety of chemical or mechanical means, including solvent or alkaline degreasers, acid immersion (pickling), grit blasting, sanding, wire brushing, and other mechanical abrasion techniques.

Soldering fluxes are generally classified as *corrosive* or *noncorrosive*. The most common noncorrosive flux is *rosin* (the residue after distilling turpentine) dissolved in alcohol. Rosin fluxes are suitable for making joints to copper and brass, and to tin-, cadmium-, and silver-plated surfaces, provided that the surfaces have been adequately cleaned prior to soldering. Aniline phosphate is a more active noncorrosive flux, but it has limited use because it emits toxic gases when heated. The wide variety of corrosive fluxes provide enhanced cleaning action but require complete removal after the soldering operation to prevent corrosion problems during service.

THE SOLDERING OPERATION

Soldering requires a source of sufficient heat and a means of transferring it to the metals being joined. Any method of heating that is suitable for brazing can be used for soldering, but furnace and salt-bath heating are seldom used. Most hand soldering is still done with soldering irons or small oxyfuel or air-fuel (acetylene, propane, butane, or MAPP) torches. Induction heating is used when large numbers of identical parts are to be soldered. For low-melting-point solders, infrared heat sources can also be employed. The joints can be preloaded with solder, or the filler metal can be supplied from a wire. The particular method of heating usually dictates which procedure is used.

Wave soldering, depicted in Figure 33-19, is a process used to solder wire ends, such as the multiple connectors that protrude through holes in electronic circuit boards. Molten solder is pumped upward through a submerged nozzle to create a wave or crest in a pool of molten metal. The circuit boards are then passed across this wave at a height where each of the pins sees contact with the molten metal. Wetting and capillary action pulls solder into each joint, and numerous connections are made as each board passes across the wave.

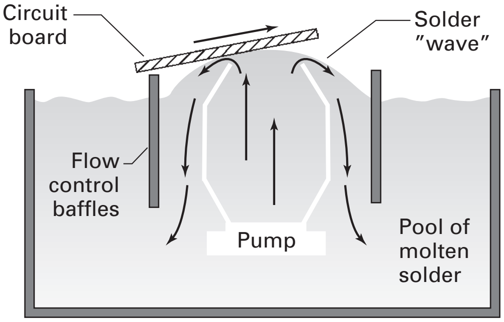

FIGURE 33-19 Schematic of wave soldering.

In the *vapor-phase soldering* process, a product with prepositioned solder is passed through a chamber containing hot, saturated vapor. The vapor condenses on the cooler product, transferring its heat of vaporization. This results in rapid and uniform heating, with excellent temperature control and the possibility of an oxygen-free environment. The soldering temperature is limited only by the boiling point of the fluid, with current materials operating in the range of 100° to 265°C (212°to 510°F). While the process can be used to cure epoxies and stress relieve metals, its primary application is the soldering of surface-mounted components to substrate materials. Because of the precise temperature control, multipass soldering is possible, using up to three different solder compositions with three different melting temperatures. Because the solder is prepositioned, this process is also known as *vapor-phase reflow soldering*.

Dip soldering, where the entire piece is immersed in molten metal, has been used to produce automobile radiators and "tinned" coatings.

FLUX REMOVAL

After soldering, the flux residues should be removed from the finished joints, either to prevent corrosion or for the sake of appearance. Flux removal is rarely difficult, provided that the type of solvent in the flux is known. Water-soluble fluxes can be removed with hot water and a brush. Alcohol will remove most rosin fluxes. However, when the flux contains some form of grease, as in most paste fluxes, a grease solvent must be used, followed by a hot-water rinse. In the past, solvents containing chlorofluorocarbons (CFCs) were the cleaners of choice, but since they have been implicated in the depletion of atmospheric ozone, an alternative means of flux removal should be employed or the process converted to fluxless soldering.

FLUXLESS SOLDERING

Several *fluxless-soldering* techniques have been developed using controlled atmospheres (such as hydrogen plasma), thermomechanical surface activation (such as plasma gas impingement), or protective coatings that prevent oxide formation and enhance wetting. Additional successes have been reported with both laser and ultrasonic soldering.

■ Key Words

assist gas
autogenous weld
braze welding
brazing
butt joint
capillary action
corrosive flux
dip brazing
dip soldering
electron-beam welding
electroslag welding
filler metal
flash welding
fluidity
flux
fluxless brazing
fluxless soldering
furnace brazing
hard facing
hybrid processes
induction brazing
jigs and fixtures
joint clearance
kerf
lap joint
laser spot welding
laser-beam cutting
laser-beam welding
lead-free solder
metallizing
molding plates
noncorrosive flux
percussion welding
reflow soldering
resistance brazing
rosin
salt-bath brazing
silver solder
soldering
surfacing
thermal spray
thermit
thermit welding
torch brazing
upset welding
vapor-phase soldering
wave soldering
wettability

Review Questions

1. In what ways is a thermit weld similar to the production of a casting?
2. What is the source of the welding heat in thermit welding?
3. For what types of applications might thermit welding be attractive?
4. What is the source of the welding heat in electroslag welding?
5. What are some of the various functions of the slag in electroslag welding?
6. Electroslag welding would be most attractive for the joining of what types of geometries and thicknesses?
7. Why is a high vacuum required in the electron-beam chamber of an electron-beam welding machine?
8. What types of production limitations are imposed by the high-vacuum requirements of electron-beam welding? What compromises are made when welding is performed on pieces outside the vacuum chamber?
9. What are the major assets and negative features of high-voltage electron-beam welding equipment?
10. What are some of the attractive features of electron-beam welding? Negative features?
11. What is unique about the fusion zone geometry of electron-beam welds?
12. What are some of the ways in which laser-beam welding is more attractive than electron-beam welding?
13. Which type of laser light can be transmitted through fiber-optic cable?
14. Why is laser-beam welding an attractive process for producing tailored blanks for sheet metal forming? For use on small electronic components?
15. What are the attractive properties of hybrid processes that combine laser and arc welding?
16. What is the function of the *assist gas* in laser-beam cutting?
17. How do the cut edges differ with endothermic laser cutting and exothermic laser cutting?
18. What features have made lasers a common means of cutting composite materials?
19. What are some of the attractive features of laser spot welding?
20. In the flash-welding process, why is it important to have a sufficient duration of arcing and sufficient amount of upsetting?
21. What are some common objectives of surfacing operations?
22. What types of materials are applied by surfacing methods?
23. What are some of the primary methods by which surfacing materials can be deposited onto a metal substrate?
24. What are some of the techniques that can be used to apply a thermal spray coating?
25. How is thermal spraying similar to surfacing? How is it different?
26. Why is surface preparation such a critical feature of metallizing?
27. What are some of the more common applications of sprayed coatings?
28. Provide a reasonable definition of brazing.
29. What are some key differences between brazing and fusion welding?
30. Why is brazing an attractive process for joining dissimilar materials?
31. What advantages can be gained by the lower temperatures of the brazing process?
32. Why do brazed joints have an enhanced susceptibility to corrosion?
33. What is the most important factor contributing to the strength of a brazed joint?
34. How does capillary action relate to joint clearance?
35. Why is it necessary to adjust the initial room-temperature clearance of a joint between two significantly different metals?
36. What is wettability? Fluidity? How does each relate to brazing?
37. What are the two most common types of brazed joints and the attractive features of each?
38. What are some important considerations when selecting a brazing alloy?
39. What are some of the most commonly used brazing metals?
40. What special measures should be taken when brazing aluminum?
41. What are the three primary functions of a brazing flux?
42. Why is it important to preclean brazing surfaces before applying the flux?
43. In what ways might braze metal be preloaded into joints?
44. What is the purpose of brazing jigs and fixtures?
45. What is the primary attraction of furnace-brazing operations?
46. Why might reducing atmospheres or a vacuum be employed during furnace-brazing operations?
47. Why is dip brazing usually restricted to use with small parts?
48. What are some of the attractive features of induction brazing?
49. Why is flux removal a necessary part of many brazing operations?
50. What benefits can be achieved through fluxless brazing?
51. How does braze welding differ from traditional brazing?
52. What is the primary difference between brazing and soldering?
53. Why is soldering unattractive if a high-strength joint is desired?
54. For many years, the most common solders were alloys of what two base metals?
55. What is driving the conversion to lead-free solders?
56. What are some of the difficulties encountered when attempting a conversion to lead-free solder?
57. What are the two basic families of soldering flux?
58. What are some of the more common heat sources for producing a soldered joint?

Problems

1. A common problem with brazed or soldered joints is galvanic corrosion, since the joint usually involves dissimilar metals in direct metal-to-metal electrical contact.
   a. For each of the various solder or braze joints described below, determine which material will act as the corroding anode.
      (1) Two pieces of low-carbon steel being brazed with a copper-base brazing alloy
      (2) A copper wire being soldered to a steel sheet using lead–tin solder
      (3) Pieces of tungsten carbide being brazed into recesses in a carbon-steel plate
   b. How do the various lead-free solders compare to the conventional lead–tin solders with regard to their potential for galvanic corrosion?
   c. If galvanic corrosion becomes a significant and chronic problem in a brazed assembly, what changes might you suggest that could possibly reduce or eliminate the problem?

CHAPTER 34

ADHESIVE BONDING, MECHANICAL FASTENING, AND JOINING OF NONMETALS

34.1 ADHESIVE BONDING

The *ideal adhesive* bonds to any material, needs no surface preparation, cures rapidly, and maintains a high bond strength under all operating conditions. It also doesn't exist. However, tremendous advances have been made in the development of adhesives that are stronger, easier to use, less costly, and more reliable than many of the alternative methods of joining. From early applications, such as plywood, the use of structural adhesives has grown rapidly. Adhesives are everywhere—in construction, packaging, furniture, appliances, electronics, bookbinding, product assembly, and even medical and dental applications. They are used to bond metals, ceramics, glass, plastics, rubbers, composite materials, woods, and even a variety of roofing materials. Even such quality- and durability-conscious fields as the automotive and aircraft industries now make extensive use of adhesive bonding. Adhesives in the automotive industry have advanced from the attaching of interior and exterior trim to the joining of major components, such as door, hood, and trunk assemblies, and the installation of the nonmoving front and rear windows. Adhesive bonding has become the preferred means of assembly for polymeric body panels made from sheet-molding compounds and reaction-injection-molded (RIM) materials. Moreover, since adhesive bonding has the ability to bond such a wide variety of materials, its use has grown significantly with the ever-expanding applications of plastics and composites.

ADHESIVE MATERIALS AND THEIR PROPERTIES

In *adhesive bonding*, a nonmetallic material (the *adhesive*) is used to fill the gap and create a joint between two surfaces. The actual adhesives span a wide range of material types and forms, including *thermoplastic* resins, *thermosetting* resins, artificial *elastomers*, and even some ceramics. They can be applied as drops, beads, pellets, tapes, or coatings (films) and are available in the form of liquids, pastes, gels, and solids. *Curing* can be induced by the use of heat, radiation or light (photoinitiation), moisture, activators, catalysts, multiple-component reactions, or combinations thereof. Applications can be full load bearing (structural adhesives), light-duty holding or fixturing, or simply sealing (the forming of liquid- or gas-tight joints). With such a wide range of possibilities, the selection of the best adhesive for the task at hand can often be quite challenging.

The *structural adhesives* are selected for their ability to effectively transmit load across the joint; they include epoxies, cyanoacrylates, anaerobics, acrylics, urethanes, silicones, high-temperature adhesives, and hot melts. Both strength and rigidity may be important, and the bond must be able to be stressed to a high percentage of its maximum load for extended periods of time without failure.

1. *Epoxies*. The thermosetting epoxies are the oldest, most common, and most diverse of the adhesive systems; they can be used to join most engineering materials, including metal, glass, and ceramic. They are strong, versatile adhesives that can be designed to offer high adhesion, good tensile and shear strength, toughness, high rigidity, creep resistance, easy curing with little shrinkage, good chemical resistance, and tolerance to elevated temperatures. Various epoxies can be used over a temperature range from −50° to +250°C (−60° to +500°F). After curing at room temperature, shear strengths can be as high as 35 to 70 MPa (5000 to 10,000 psi).

   Single-component epoxies use heat as the curing agent. Most epoxies, however, are two-component blends involving a resin and a curing agent, plus possible additives such as accelerators, plasticizers, and fillers that serve to enhance cure rate, flexibility, peel resistance, impact resistance, or other characteristics. Heat may again be required to drive or accelerate the cure.

   Low peel strength and poor flexibility limit epoxy adhesives, and the bond strength can be sensitive to moisture and surface contamination. Epoxies are often brittle at low temperatures, and the rate of curing is comparatively slow. Sufficient strength for structural applications is generally achieved in 8 to 12 hours, with full strength often requiring two to seven days.

2. *Cyanoacrylates*. These are liquid monomers that polymerize when spread into a thin film between two surfaces. Trace amounts of moisture on the surfaces promote curing at amazing speeds, often in as little as two seconds. Thus, the cyanoacrylates offer a one-component adhesive system that cures at room temperature with no external impetus. Commonly known as *superglues*, this family of adhesives is now available in the form of liquids and gels of varying viscosity, toughened versions designed to overcome brittleness, and even nonfrosting varieties.

   The cyanoacrylates provide excellent tensile strength, fast curing, and good shelf life, and they adhere well to most commercial plastics, metals, and rubbers. They are limited by their high cost, poor peel strength, and brittleness. Bond properties are poor at elevated temperatures, and effective curing requires good component fit (gaps must be smaller than 0.25 mm, or 0.010 in.).

3. *Anaerobics*. These one-component, thermosetting, polyester acrylics remain liquid when exposed to air. When confined to small spaces and shut off from oxygen, as in a joint to be bonded or along the threads of an inserted fastener, the polymer becomes unstable. In the presence of iron or copper, it polymerizes into a bonding-type resin, without the need for elevated temperature. Curing can occur across gaps as large as 1 mm, or 0.04 in. Additives can reduce odor, flammability, and toxicity and can speed the curing operation. Slow-curing anaerobics require 6 to 24 hours to attain useful strength. With selected additives and heat, however, curing can be reduced to as little as five minutes.

   The anaerobics are extremely versatile and can bond almost anything, including oily surfaces. The joints resist vibrations and offer good sealing to moisture and other environmental influences. Unfortunately, they are somewhat brittle and are limited to service temperatures below 150°C (300°F).

4. *Acrylics*. The acrylic-based adhesives offer good strength, toughness, and versatility, and they are able to bond a variety of materials, including plastics, metals, ceramics, and composites, even oily or dirty surfaces. Most involve application systems where a catalyst primer (curing agent) is applied to one of the surfaces to be joined and the adhesive is applied to the other. The pretreated parts can be stored separately for weeks without damage. Upon assembly, the components react to produce a strong bond at room temperature. Heat can often accelerate the curing, and at least one va-

riety cures with ultraviolet (UV) light. In comparison to other varieties of adhesives, the acrylics offer strengths comparable to the epoxies, flexible bonds, good resistance to water and humidity, and the added advantages of room-temperature curing and a no-mix application system. Major limitations include poor strength at high temperatures, flammability, and an unpleasant odor when still uncured.

5. *Urethanes*. Urethane adhesives are a large and diverse family of polymers that are generally targeted for applications that involve temperatures below 65°C (150°F) and components that require great flexibility. Both one-part thermoplastic and two-part thermosetting systems are available. Urethanes cure quickly to handling strength but are slow to reach the full-cure condition. Two minutes to handling with 24 hours to complete cure is common at room temperature.

   Compared to other structural adhesives, the urethanes offer good flexibility and toughness, even at low operating temperatures. They are somewhat sensitive to moisture, degrade in many chemical environments, and can involve toxic components or curing products.

6. *Silicones*. The silicone thermosets cure from the moisture in the air or adsorbed moisture from the surfaces being joined. They form low-strength structural joints and are usually selected when considerable expansion and contraction are expected in the joint; flexibility is required (as in sheet metal parts); or good gasket, gap-filling, or sealing properties are necessary. Metals, glass, paper, plastics, and rubbers can all be joined. The adhesives are relatively expensive, and curing is slow, but the bonds that are produced can resist moisture, hot water, oxidation, and weathering, and they retain their flexibility at low temperature.

7. *High-temperature adhesives*. When strength must be retained at temperatures in excess of 300°C (500°F), high-temperature structural adhesives should be specified. These include epoxy phenolics, modified silicones or phenolics, polyamides, and some ceramics. High cost and long cure times are the major limitations for these adhesives, which see primary application in the aerospace industry.

8. *Hot melts*. Hot-melt adhesives can be used to bond dissimilar substrates, such as plastics, rubber, metals, ceramics, glass, wood, and fibrous materials like paper, fabric, and leather. They can produce permanent or temporary bonds, seal gaps, and plug holes. While generally not considered to be true structural adhesives, the hot melts are being used increasingly to transmit loads, especially in composite-material assemblies. The joints can withstand exposure to vibration, shock, humidity, and numerous chemicals, and they offer the added features of sound deadening and vibration damping.

   Most hot-melt adhesives are thermoplastic resins that are solid at room temperature but melt abruptly when heated into the range of 100° to 150°C (200° to 300°F). They are usually applied as heated liquids (between 160° and 180°C) and form a bond as the molten adhesive cools and resolidifies. Another method of application is to position the adhesive in the joint prior to operations, such as the paint-bake process in automobile manufacture. During the baking, the adhesive melts, flows into seams and crevices, and seals against the entry of corrosive moisture. These adhesives contain no solvents and do not need time to cure or dry. Hot melts achieve over 80% of their bond strength within seconds of solidification, but they do soften and creep when subsequently exposed to elevated temperatures and can become brittle when cold.

Additives also play a large part in the success of industrial adhesives. They can impart or enhance properties like toughness, joint durability, moisture resistance, adhesion, and flame retardance. Rheological additives and plasticizers control viscosity and flow. Adhesives must penetrate the surfaces to be bonded but should not flow in an uncontrollable fashion. Fillers and extenders provide bulk and reduce cost.

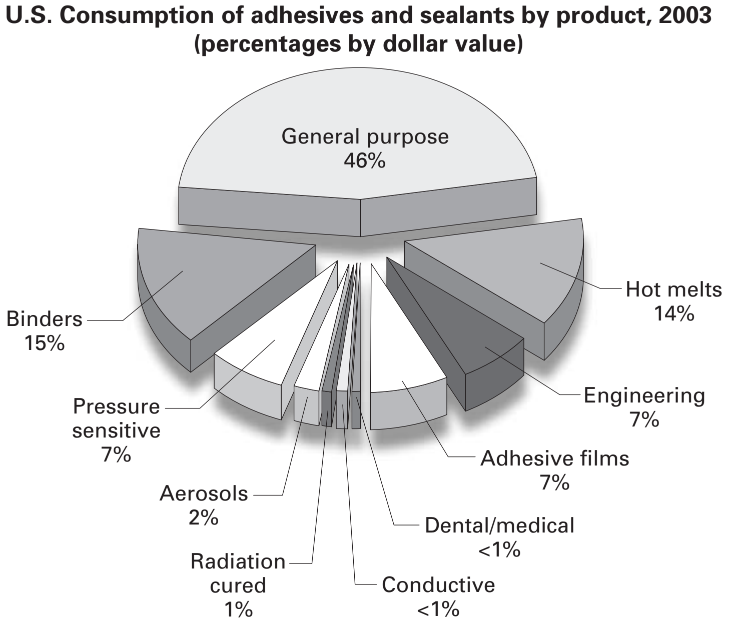

FIGURE 34-1 Distribution among the common types of adhesives and sealants. *(Reprinted with permission from* The Rauch Guide to the US Adhesives & Sealants Industry, *Fifth Edition, 2006, Grey House Publishing, Millerton, NY).*

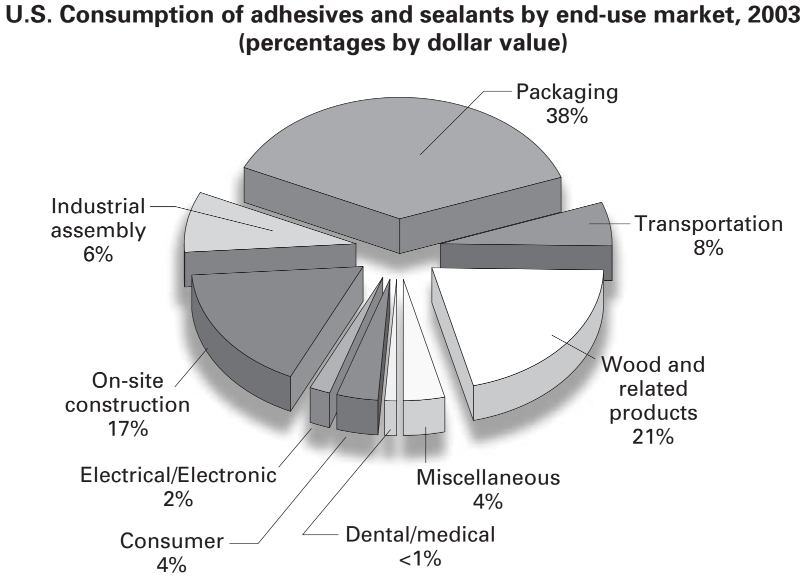

FIGURE 34-2 Distribution of adhesives and sealants by end-use areas. *(Reprinted with permission from* The Rauch Guide to the US Adhesives & Sealants Industry, *Fifth Edition, 2006, Grey House Publishing, Millerton, NY).*

Figure 34-1 shows the distribution of various types of adhesive and sealant products for a recent year, and Figure 34-2 classifies adhesives by end-use markets. Table 34-1 lists some popular structural adhesives, along with their service and curing temperatures and expected strengths. Table 34-2 presents the advantages and disadvantages of various curing processes.

NONSTRUCTURAL AND SPECIAL ADHESIVES

There are a number of other types of adhesives whose limited load-bearing capabilities place them in a nonstructural classification. Nevertheless, they still play roles in manufacturing through a variety of uses, such as labeling and packaging. The hot-melt adhesives are often placed in this category but can be used for applications in both classifications. *Evaporative adhesives* use an organic solvent or water base, coupled with vinyls, acrylics, phenolics, polyurethanes, or various types of rubbers. Some common evaporative adhesives are rubber cements and floor waxes. *Pressure-sensitive adhesives* are usually based on various rubbers, compounded with additives to bond at room

TABLE 34-1 Some Common Structural Adhesives, Their Cure Temperatures, Maximum Service Temperatures, and Strengths under Various Types of Loadings

Adhesive Type	Cure Temperature (°F)	Service Temperature (°F)	Lap Shear Strength (psi at °F)[a]	Peel Strength at Room Temperature (lb/in.)
Butyral-phenolic	275 to 350	−60 to 175	1000 at 175 2500 at RT	10
Epoxy				
Room-temperature cure	60 to 90	−60 to 180	1500 at 180 2500 at RT	4
Elevated-temperature cure	200 to 350	−60 to 350	1500 at 350 2500 at RT	5
Epoxy-nylon	250 to 350	−420 to 180	2000 at 180 6000 at RT	70
Epoxy-phenolic	250 to 350	−420 to 500	1000 at 175 2500 at RT	10
Neoprene-phenolic	275 to 350	−60 to 180	1000 at 180 2000 at RT	15
Nitrile-phenolic	275 to 350	−60 to 250	2000 at 250 4000 at RT	60
Polyimide	550 to 650	−420 to 1000	1000 at 1000 2500 at RT	3
Urethane	75 to 250	−420 to 175	1000 at 175 2500 at RT	50

[a] RT, room temperature.

TABLE 34-2 Advantages and Disadvantages of Various Structural Adhesive Curing Processes

Curing Process	Advantages	Disadvantages
Mixing reactive components	Good shelf life, unlimited depth of cure, accelerated with heat	High processing costs, mix ratio critical to performance
Anaerobic cure	Single-component adhesive, good shelf life	Poor depth of cure, require primer on many surfaces, sensitive to surface contaminants
Heat cure	Unlimited depth of cure, heat can aid adhesion	Expenses for oven energy cost, heat can adversely affect some substrates
Moisture cure	Room-temperature process, one component, no curing equipment required	Long cure cycles (12–72 hr), minimum % humidity required, limited depth of cure
Light cure	Rapid cure, cure on demand	Expenses for UV light source, limited depth of cure, most allow light to reach bond
Surface-initiated cure	Rapid cure	Poor depth of cure

temperature with a brief application of pressure. No cure is involved, and the tacky adhesive-coated surfaces require no activation by water, solvents, or heat. Peel-and-stick labels, cellophane tape, and Post-it notes are examples of this group of adhesives. *Delayed-tack adhesives* are similar to the pressure-sensitive systems but are nontacky until activated by exposure to heat. Once heated, they remain tacky for several minutes to a few days to permit use or assembly.

While most adhesives are electrical and thermal insulators, *conductive adhesives* can be produced by incorporating selected fillers, such as silver, copper, or aluminum, in the form of flakes or powder. Certain ceramic oxide fillers can be used to provide thermal conductivity coupled with electrical insulation.

Still another group of commercial adhesives are those designed to cure by exposure to radiation, such as visible, infrared, or ultraviolet light; microwaves; or electron beams. These *radiation-curing adhesives* offer rapid conversion from liquid to solid at room temperature and a curing mechanism that occurs throughout, rather than progressing from exposed surfaces (as with the competing low-temperature air or moisture cures). Current applications include a wide variety of dental amalgams that can fill cavities or seal surfaces while matching the color of the remaining tooth. In the manufacturing realm, heat-sensitive materials can be effectively bonded, and the rapid cure time significantly reduces the need for fixturing.

DESIGN CONSIDERATIONS

The structural adhesives have been used for a wide range of applications in fields as diverse as automotive, aerospace, appliances, biomedical, electronics, construction, machinery, and sporting goods. Proper selection and use, however, requires consideration of a number of factors, including the following:

1. What materials are being joined? What are their surface finishes, hardnesses, and porosities? Will the thermal expansions or contractions be different?
2. How will the joined assembly be used? What type of joint is proposed, what will be the bond area, and what will be the applied stresses? How much strength is required? Will there be mechanical vibration, acoustical vibration, or impacts?
3. What temperatures might be required to affect the cure, and what temperatures might be encountered during service? Consideration should be given to the highest temperature, lowest temperature, rates of temperature change, frequency of change, duration of exposure to extremes, properties required at the various conditions, and differential expansions or contractions.
4. Will there be subsequent exposure to solvents, water or humidity, fuels or oils, light, ultraviolet radiation, acid solutions, or general weathering?
5. What is the desired level of flexibility or stiffness? How much toughness is required?
6. Over what length of time is stability desired? What portion of this time will be under load?
7. Is appearance important?
8. How will the adhesive be applied? What equipment, labor, and skill are required?
9. Are there restrictions relating to storage or shelf life? Cure time? Disposal or recyclability?
10. What will it cost?

Because there is such a large difference in bonding area, adhesive-bonded joints are often classified as either continuous surface or core-to-face. In *continuous-surface bonds*, both of the adhering surfaces are relatively large and are of the same size and shape. *Core-to-face bonds* have one *adherend* area that is very small compared to the other, like when the edges of lightweight honeycomb core structures are bonded to the face sheets (see Figure 15-19).

A major design consideration for both types is the nature of the stresses that the joint will experience. As shown in Figure 34-3, applied stresses can subject the joint to *tension*, *compression*, *shear*, *cleavage*, and *peel*. Most of the structural adhesives are significantly weaker in peel and cleavage than they are in shear or tension. Therefore, adhesively bonded joints should be designed so as much of the stress as possible is in shear, tension, or compression, where all of the bonded area shares equally in bearing the load. The shear strengths of structural adhesives range from 14 to 40 MPa (2000 to 6000 psi) at room temperature, while the tensile strengths are only 4 to 8 MPa (600 to 1200 psi). The best adhesive-bonded joints, therefore, will be those that are designed to utilize the superior shear strengths. Creep, vibration and associated fatigue, thermal shock, and mechanical shocks can all induce additional stresses. When vibration or shock loading is expected, the elastomeric adhesives are quite attractive, since they can provide valuable damping.

Figure 34-4 shows some commonly used joint designs and indicates their relative effectiveness. The butt joint is unsatisfactory because it offers only a minimum of bond surface area and little resistance to cleavage. Useful strength is generally obtained by

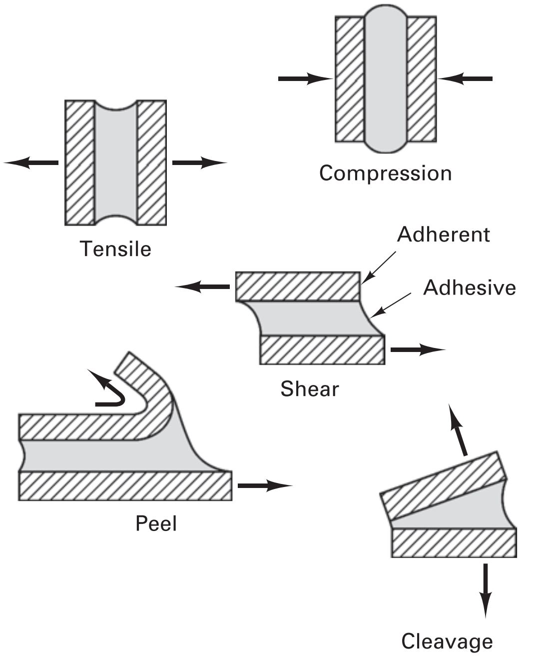

FIGURE 34-3 Types of stresses in adhesive-bonded joints.

increasing the bond area through the addition of straps or the conversion to some form of lap design. The scarf joint, shown previously in Figure 34-14, is also used when uniform thickness is required. Figure 34-5 shows some recommended designs for corner and angle joints. Adhesives can also be used in combination with welding, brazing, or mechanical fasteners. Spot welds or rivets can provide additional strength or simply prevent movement of the components when the adhesive is not fully cured or is softened by exposure to elevated temperature.

To obtain satisfactory and consistent quality in adhesive-bonded joints, it is essential that the surfaces be properly prepared. Procedures vary widely but frequently include cleaning of the surfaces to be joined. Contaminants, such as oil, grease, rust, scale, or even mold-release agents, must be removed to ensure adequate wetting of the surfaces by the adhesive. Solvent or vapor cleaning is usually adequate. Chemical alteration of the surface to form a new intermediate layer, chemical etching, steam cleaning, or abrasive techniques may also be employed to further enhance wetting and bonding. While thick or loose oxide films are detrimental to adhesive bonding, a thin porous oxide or surface primer can often provide surface roughness and enhance adhesion.

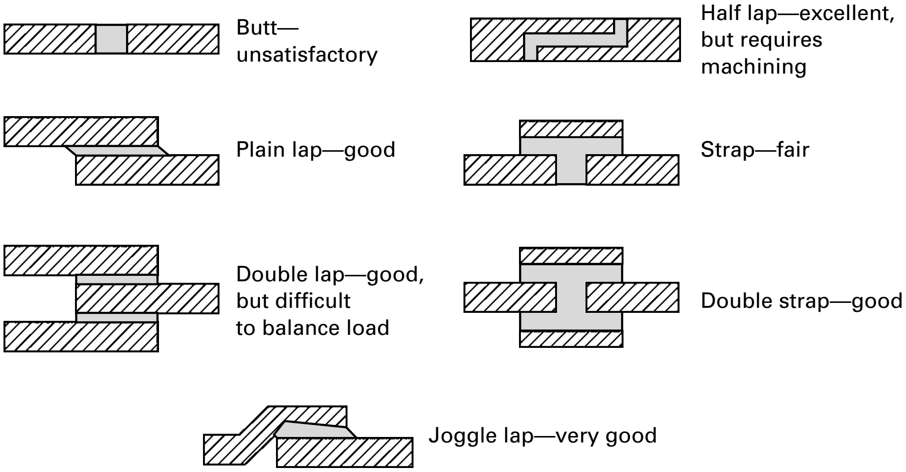

FIGURE 34-4 Possible designs of adhesive-bonded joints and a rating of their performance in service.

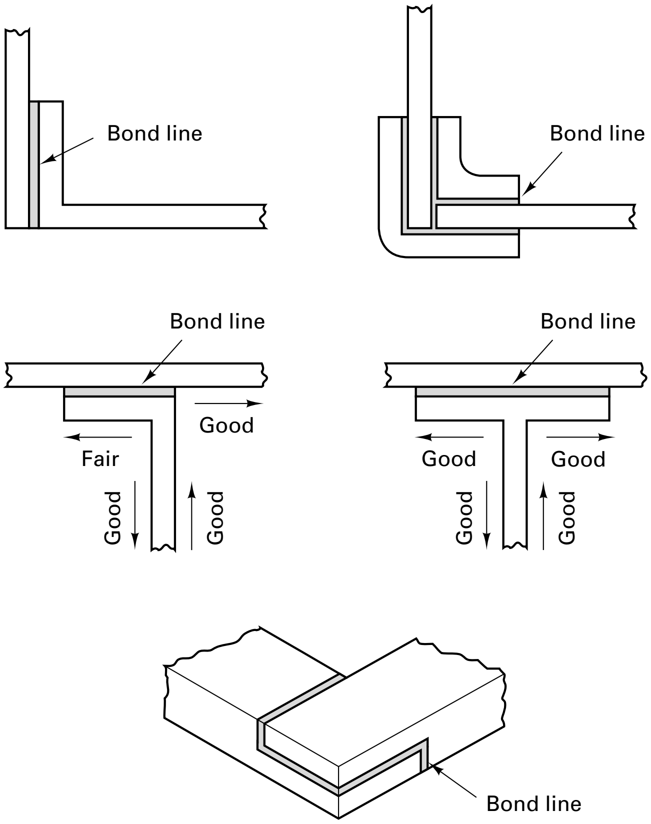

FIGURE 34-5 Adhesively bonded corner and angle joint designs.

The destructive testing of adhesive joints, or the examination of joint failures, can reveal much about the effectiveness of an adhesive system. If failure occurs by separation at the adhesive–substrate interface, as shown in Figure 34-6a, it is indicative of a bonding or adhesion problem. If the failure lies entirely within the adhesive, as in Figure 34-6b, then the bonding with the substrate is adequate, but the strength of the adhesive may need to be enhanced. Finally, if failure occurs within the substrate materials, as in Figure 34-6c, the joint is good, and failure is unrelated to the adhesive bonding operation.

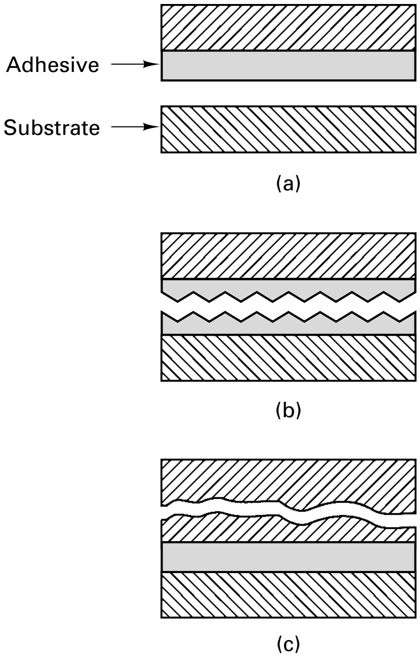

FIGURE 34-6 Failure modes of adhesive joints. (a) Adhesive failure, (b) cohesive failure within the adhesive, and (c) cohesive failure within the substrate.

ADVANTAGES AND LIMITATIONS

Adhesive bonding has many obvious advantages. Almost any material or combination of materials can be joined in a wide variety of sizes, shapes, and thicknesses. For most adhesives, the curing temperatures are low, seldom exceeding 180°C (350°F). A substantial number cure at room temperature or slightly above and can provide adequate strength for many applications. As a result, very thin or delicate materials, such as foils, can be joined to each other or to heavier sections. Heat-sensitive materials can be joined without damage, and heat-affected zones are not present in the product. When joining dissimilar materials that experience changes in temperature, the adhesive often provides a bond that can tolerate the stresses of differential expansion and contraction.

Because adhesives bond the entire joint area, good load distribution and fatigue resistance are obtained, and stress concentrations (such as those observed with screws, rivets, and spot welds) are avoided. Because of the high extension and recovery properties of flexible adhesives, the fatigue resistance can be up to 20 times that of riveted or spot-welded assemblies. The large contact areas that are usually employed provide a total joint strength that compares favorably with alternative methods of joining or attachment. Shear strengths of industrial adhesives can exceed 20 MPa, or 3000 psi, and additives can be incorporated to enhance strength, increase flexibility, or provide resistance to various environments.

Adhesives are generally inexpensive and frequently weigh less than the fasteners needed to produce a comparable-strength joint. In addition, an adhesive can also provide thermal and electrical insulation; act as a damper to noise, shock, and vibration; stop a propagating crack; and provide protection against galvanic corrosion when dissimilar metals are joined. By providing both a joint and a seal against moisture, gases, and fluids, adhesive-bonded assemblies often offer improved corrosion resistance throughout their useful lifetime. When used to bond polymers or polymer-matrix composites, the adhesive can be selected from the same family of materials to ensure good compatibility.

From a manufacturing viewpoint, the formation of a joint does not require the capillary-induced flow of material, as in brazing and soldering. The bonding adhesive is applied directly to the surfaces, and the joint is then formed by the application of heat and/or pressure. Most adhesives can be applied quickly, and useful strengths are achieved in a short period of time. Some curing mechanisms take as little as two to three seconds! Surface preparation may be reduced since bonding can occur with an oxide film in place, and rough surfaces are actually beneficial because of the increased contact area. Tolerances are less critical since the adhesives are more forgiving than alternative methods of bonding. The adhesives are often invisible; exposed surfaces are not defaced; smooth contours are not disturbed; and holes do not have to be made, as with rivets or bolts. These factors contribute to reduced manufacturing costs, which can be further reduced through the elimination of the mechanical fasteners and the absence of highly skilled labor. Bonding can often be achieved at locations that would prevent the access of many types of welding apparatus. Robotic dispensing systems can often be utilized.

The major disadvantages of adhesive bonding are the following:

1. There is no universal adhesive. Selection of the proper adhesive is often complicated by the wide variety of available options.
2. Most industrial adhesives are not stable above 180°C (350°F). Oxidation reactions are accelerated, thermoplastics can soften and melt, and thermosets decompose. While some adhesives can be used up to 260°C (500°F), elevated temperatures are usually a cause for concern.
3. Some adhesives shrink significantly during curing.
4. High-strength adhesives are often brittle (poor impact properties). Resilient ones often creep. Some become brittle when exposed to low temperatures.
5. Surface preparation and cleanliness, adhesive preparation, and curing can be critical if good and consistent results are to be obtained. Some adhesives are quite sensitive to the presence of grease, oil, or moisture on the surfaces to be joined. Surface roughness and wetting characteristics must be controlled.
6. Assembly times may be greater than for alternative methods, depending upon the curing mechanism. Elevated temperatures may be required, as well as specialized fixtures.

7. It is difficult to determine the quality of an adhesive-bonded joint by traditional nondestructive techniques, although some inspection methods have been developed that give good results for certain types of joints.
8. Some adhesives contain objectionable chemicals or solvents, or produce them upon curing.
9. Many structural adhesives deteriorate under certain operating conditions. Environments that may be particularly hostile include heat, ultraviolet light, ozone, acid rain (low pH), water and humidity, salt, and numerous solvents. Thus, long-term durability and reliability may be questioned, and life expectancy is hard to predict.
10. Adhesively bonded joints cannot be readily disassembled.

Nevertheless, the extensive and successful use of adhesive bonding provides ample evidence that these limitations can be overcome if adequate quality control procedures are adopted and followed.

34.2 MECHANICAL FASTENING

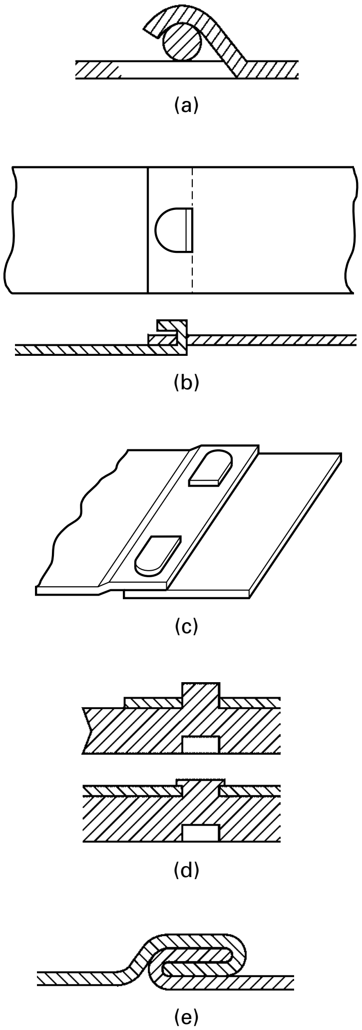
(a)

(b)

(c)

(d)

(e)

FIGURE 34-7 Several types of integral fasteners: (a) lanced tab to fasten wires or cables to sheet or plate; (b) and (c) assembly through folded tabs and slots for different types of loading; (d) use of a flattened embossed protrusion; (e) single-lock seam.

INTRODUCTION AND METHODS

Mechanical fastening is a classification that includes a wide variety of techniques and fasteners designed to suit the individual requirements of a multitude of joints and assemblies. Included within this family are integral fasteners, threaded discrete fasteners (which includes screws, bolts, studs, and inserts), nonthreaded discrete fasteners (such as rivets, pins, retaining rings, nails, staples, and wire stitches), special-purpose fasteners (such as the quick-release and tamper-resistant types), shrink and expansion fits, press fits, seams, and others. Selection of the specific fastener or fastening method depends primarily on the materials to be joined, the function of the joint, strength and reliability requirements, weight limitations, dimensions of the components, and environmental conditions. Other considerations include cost, installation equipment and accessibility, appearance, and the need or desire for disassembly. When disassembly and reassembly are desired (as for parts replacement, maintenance, or repair), threaded fasteners, snap-fits, or other fasteners that can be removed quickly and easily should be specified. Such fasteners should not have a tendency to loosen after installation, however. If disassembly is not necessary, permanent fasteners are often preferred, or threaded fasteners can be coupled with anaerobic adhesives that cure to full strength at room temperature and "lock" the fastener in place.

A mechanical joint acquires its strength through either mechanical interlocking or interference of the surfaces as a result of a clamping force. No fusion or adhesion of the surfaces is required. The fasteners and fastening processes should be selected to provide the required strength and properties in view of the nature and magnitude of subsequent loading. Consider the possibility of vibrations and/or cyclic stresses that might promote loosening over a period of time. Added weight may be a significant factor in certain applications, such as aerospace and automotive. The need to withstand corrosive environments, operate at high or low temperatures, or face other severe conditions may be additional constraints to the selection of fasteners or fastening processes.

The effectiveness of a mechanical fastener often depends upon (1) the material of the fastener, (2) the fastener design (including the load-bearing area of the head), (3) hole preparation, and (4) the installation procedure. The general desire is to achieve a uniform load transfer, a minimum of stress concentration, and uniformity of installation torque or interference fit. Various means are available for achieving these goals, as described in the following paragraphs.

Integral fasteners are formed areas of a component that interfere or interlock with other components of the assembly; they are most commonly found in sheet metal products. Examples include lanced or shear-formed tabs, extruded hole flanges, embossed protrusions, edge seams, and crimps. Figure 34-7 shows some of these techniques, each of which involve some form of metal shearing and/or forming. The common beverage can includes several of these joints—an edge seam to join the top of the can to the body (as in Figure 34-7e) and an embossed protrusion that is subsequently flattened to attach the opener-tab (as in Figure 34-7d).

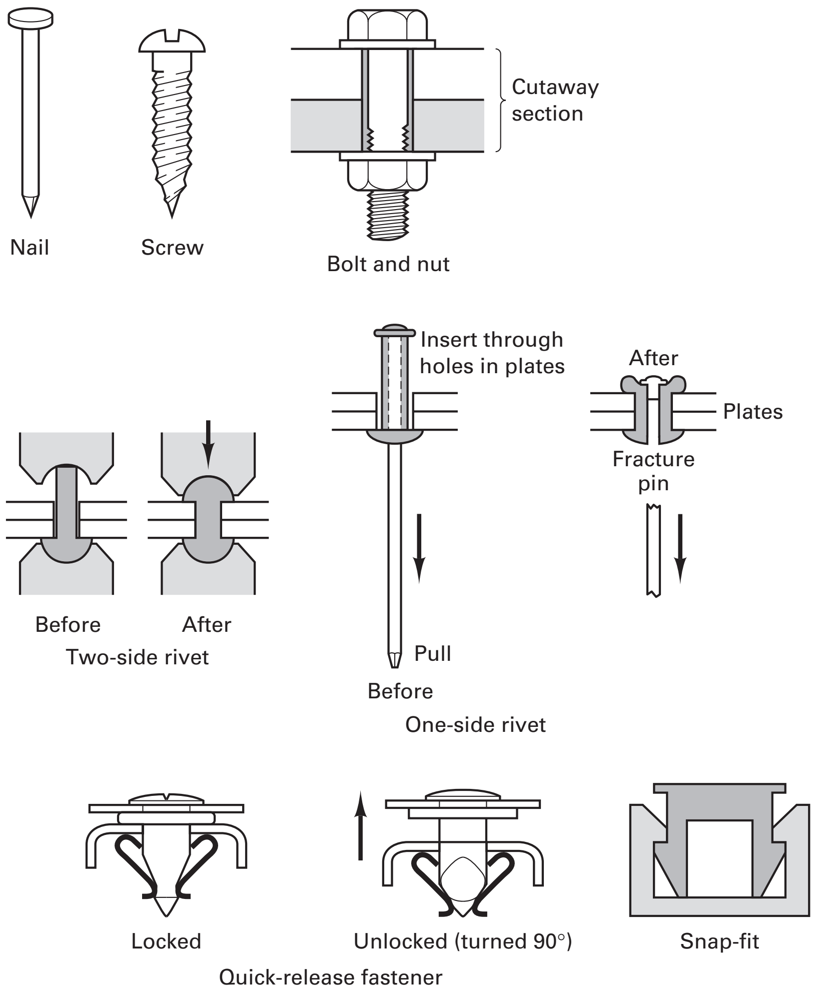

FIGURE 34-8 Various types of discrete fasteners, including a nail, screw, nut and bolt, two-side access supported rivet, one-side access blind rivet, quick-release fastener, and snap-fit.

Discrete fasteners, like those illustrated in Figure 34-8, are separate pieces whose function is to join the primary components. These include bolts and nuts (with accessory washers, etc.), screws, nails, rivets, quick-release fasteners, staples, and wire stitches. Over 150 billion discrete fasteners are consumed annually in the United States, with a variety so immense that the major challenge is usually selection of an appropriate, and hopefully optimum, fastener for the task at hand. Fastener selection is further complicated by inconsistent nomenclature and identification schemes. Some fasteners are identified by their specific product or application, while others are classified by the material from which they are made, their size, their shape, their strength, or primary operational features.[1] The commercial availability of such a wide range of standard and special types, sizes, materials, strengths, and finishes virtually ensures that an appropriate fastener can be found for most all joining needs. Discrete fasteners are easy to install, remove, and replace. In addition, most standard varieties are interchangeable. Steel is the most common material due to its high strength and low cost. Various finishes and coatings can be applied to withstand a multitude of service conditions.

Shrink and expansion fits form another major class of mechanical joining. Here, a dimensional change is introduced to one or both of the components by heating or cooling (heating one part only, heating one and cooling the other, or cooling one). Assembly is then performed, and a strong interference fit is established when the temperatures return to uniformity. Joint strength can be exceptionally high. A corrosion-resistant cladding or lining can also be applied to a less costly bulk material.

---

[1] Discussion of the primary terms used in identifying discrete fasteners can be found in ANSI Standard B18.12. Both the Society of Automotive Engineers (SAE) and the American Society of Testing and Materials (ASTM) have formalized various "grades" of bolts and identified them by markings that are stamped on the bolt head. These grades often relate to allowable stress and temperatures of operation.

Press fits are similar to shrink and expansion fits, but the results are obtained through mechanical force instead of differential temperatures.

REASONS FOR SELECTION

Mechanical fastening offers a number of attractive features, among them the following:

1. They are easy to disassemble and reassemble. The threaded fasteners are noteworthy for this feature, and semipermanent fasteners (such as rivets) can be drilled out for a major disassembly.
2. They have the ability to join similar or different materials in a wide variety of sizes, shapes, and joint designs. Some joint designs, such as hinges and slides, permit limited motion between the components.
3. Manufacturing cost is low. The fasteners are usually small formed components that cost little compared to the components being joined. They are readily available in a variety of mass-produced sizes.
4. Installation does not adversely affect the base materials, as is often the case with techniques involving the application of heat and/or pressure.
5. Little or no surface preparation or cleaning is required.

MANUFACTURING CONCERNS

Many mechanical fasteners require that the components contain aligned holes. Castings, forgings, extrusions, and powder metallurgy components can be designed to include integral holes. Holes can also be produced by such techniques as punching, drilling, and electrical, chemical, or laser-beam machining. Each of these techniques produces holes with characteristic surface finish, dimensional features, and properties. Secondary operations, such as shaving, deburring, reaming, and honing, can be used to improve precision and surface finish. Hole making and the proper positioning and alignment of the holes are major considerations in mechanical fastening.

Some fasteners, such as bolts coupled with nuts, require access to both sides of an assembly during joining. In contrast, screws offer one-side joining. If a bolt can be inserted into a threaded (tapped) hole, however, the nut can be eliminated, and only one-side access is required. If the bolt or screw is sufficiently hard, the fastener can often form its own threads, thereby eliminating the need for a threaded receptacle. This self-tapping feature is particularly attractive when assembling plastic products.

Stapling is a fast way of joining thin materials and does not require prior hole making. Rivets offer good strength but produce permanent or semipermanent joints. Snap-fits utilize the elasticity of one of the components, but the necessary elastic deformation must be possible without fracture.

DESIGN AND SELECTION

The design and selection of a fastening method requires numerous considerations, including the possible means of joint failure. When a product is assembled with fastened joints, the fasteners are extremely vulnerable sites. Mechanical joints generally fail because of oversight or lack of control in one of four areas: (1) the design of the fastener itself and the manufacturing techniques used to make it, (2) the material from which the fastener is made, (3) joint design, or (4) the means and details of installation. Fasteners may have insufficient strength or corrosion resistance or may be subject to stress corrosion cracking or hydrogen embrittlement. They may be unable to withstand the temperature extremes (both high and low) experienced by the final assembly. Metal fasteners provide electrical conductivity between the components, and an inappropriate choice of fastener or component material can cause severe galvanic corrosion. Nonmetallic fasteners (such as threaded nylon) can be used for low-strength applications where corrosion is a concern, but creep under load is a concern for these materials. Since mechanical fasteners only join at discrete points, gases or liquids can easily penetrate the joint area and further aggravate conditions.

Many failures are the result of poor joint preparation or improper fastener installation. A high percentage of the cracks in aircraft structures originate at fastener holes, and fatigue of fasteners is the largest single cause of fastener failure. Installation frequently imparts too much or too little preload (too tight or too loose). The joint surfaces may not be flat or parallel, and the area under the fastener head may be insufficient to bear the load. Vibrational loosening enhances fastener fatigue. The details of joint design should further consider stress distribution, since much of the load will be concentrated on the fasteners (in contrast to the previously discussed adhesive joints that distribute the load uniformly over the entire joint area).

Nearly all fastener failures can be avoided by proper design and fastener selection. Consideration should be given to the operating environment, required strength, and magnitude and frequency of vibration. Fastener design should incorporate a shank-to-head fillet whenever possible. Rolled threads can be specified for their superior strength and fracture resistance. Corrosion-resistant coatings can be employed for enhanced performance. Joint design should seek to avoid such features as offset or oversized holes. Proper installation and tightening are critical to good performance. Standard sizes, shapes, and grades should be used whenever possible, with as little variety as is absolutely necessary.

34.3 JOINING OF PLASTICS

Mechanical fasteners, adhesives, and welding processes can all be employed to form joints between engineering plastics. Fasteners are quick and are suitable for most materials, but they may be expensive to use, they generally do not provide leak-tight joints, and the localized stresses may cause them to pull free of the polymeric material. Threaded metal inserts may have to be incorporated into the plastic components to receive the fasteners, further increasing the product cost. Adhesives can provide excellent properties and fully sound joints, but they are often difficult to handle and relatively slow to cure. In addition, considerable attention is required in the areas of joint preparation and surface cleanliness. In a modification of adhesive bonding, solvents may be used to soften surfaces, which are then pressed together to form a bond. Welding can be used to produce bonded joints with mechanical properties that approach those of the parent material. Unfortunately, only the *thermoplastic polymers* can be welded, since these materials can be melted or softened by heat without degradation and good bonds can be formed with the subsequent application of pressure. The *thermosetting polymers* do not soften with heat, tending only to char or burn, and must be joined by alternative methods, such as mechanical fasteners, adhesives, snap-fits, or possible co-curing (placing the components together and curing while in contact).

Because the thermoplastics soften and melt at such low temperatures, the heat required to weld these materials is significantly less than that required in the welding of metals. The processes used to weld plastics can be divided into two groups: (1) those that utilize mechanical movement and friction to generate heat, such as ultrasonic welding, spin welding, and vibration welding, and (2) those that involve external heat sources, such as hot-plate welding, hot-gas welding, and resistive and inductive implant welding. In both groups, it is important to control the rate of heating. Plastics have low thermal conductivity, and it is easy to induce burning, charring, or other material degradation before softening has occurred to the desired depth.

Ultrasonic welding of plastics uses high-frequency mechanical vibrations to create the bond. Parts are held together and are subjected to ultrasonic vibrations (20 to 40 kH frequency and 10 to 100 micron amplitude) perpendicular to the area of contact. The high-frequency stresses generate heat at the joint interface sufficient to produce a high-quality weld in a period of $^1/_2$ to $1^1/_2$ seconds. The process can be readily automated, but the tools are expensive and large production runs are generally required. Ultrasonic welding is usually restricted to small components where relative movement is restricted and weld lengths do not to exceed a few centimeters.

In *vibration welding*, or linear friction welding, relative movement between the two parts is again used to generate the heat, but the direction of movement is now parallel to the interface and aligned with the longest dimension of the joint. The vibration amplitudes are 10 times larger than in ultrasonic welding, and the frequencies are considerably less (on the order of 100 to 240 Hz). When molten material is produced, the vibration is stopped, parts are aligned, and the weld region is allowed to cool and solidify. The entire process takes about one to five seconds. Long-length, complex joints can be produced at rather high production rates. Nearly all thermoplastics can be joined, independent of whether their prior processing was by injection molding, extrusion, blow molding, thermoforming, foaming, or stamping.

The *friction welding* of plastics (also called *spin welding*) is similar to vibration welding, except the relative motion is now continuous and rotational. The process is essentially the same as the friction welding of metals, but melting now occurs at the joint interface. High-quality welds are produced with good reproducibility, and little end preparation is required. The major limitation is that at least one of the components must exhibit circular symmetry, and the axis of rotation must be perpendicular to the mating surface. Weld strengths vary from 50 to 95% of the parent material in bonds of the same plastic. Joints between dissimilar materials generally have poorer strengths. Butt welds can be made between plates of thermoplastic using the *friction-stir welding* process described in Chapter 32.

FIGURE 34-9 Using a hot-gas torch to make a weld in plastic pipe.

Hot-plate welding uses an external heat source and is probably the simplest of the mass-production techniques used to join plastics. The parts to be joined are held in fixtures and pressed against the opposite sides of an electrically heated tool. Contact is maintained until the surfaces have melted and the adjacent material has softened to a specified distance from the interface. The parts separate, the tool is removed, and the two prepared surfaces are pressed together and allowed to cool. Contaminated surface material is usually displaced into a flash region. Weld times are comparatively slow, ranging from 10 seconds to several minutes. The joint strength can be equal to that of the parent material, but the joint design is usually limited to a square-butt configuration, like that encountered when joining sections of plastic pipe. If the bond interface has a nonflat profile, shaped heating tools can be employed. Heated-tool welding can also be used to produce lap seams between flexible plastic sheets. Rollers apply pressure after the material has passed over a heater.

The *hot-gas welding* of plastics is similar to the oxyacetylene welding of metals, and V-groove or fillet welds are the most common joint configuration. A gas (compressed air, nitrogen, hydrogen, oxygen, or carbon dioxide) is heated by an electric coil as it passes through a welding gun, like the one shown in Figure 34-9. The hot-gas stream emerges from the gun at 200° to 300°C (400° to 570°F) and impinges on the joint area. Thin rods of plastic material are heated along with the workpiece and are then forced into the softened joint area, providing both the filler material and the pressure needed to produce coalescence. Because this process is usually slow and the results are generally dependent on operator skill, it is seldom used in production applications. It is, however, a popular process for the repair of thermoplastic materials.

Extrusion welding is similar to the hot-gas process, except that the external filler material rod is replaced by a stream of fully molten polymer that emerges from the weld tool as it moves along the joint. This is similar to the wire feed in the metal-welding processes.

In the *implant welding* of plastics, metal inserts are placed between the parts to be joined and are then heated by means of induction (radio frequency) or resistance heating. The resistance method requires that a current-carrying path exist to conduct the current to the implants, a feature that is not required for induction heating. The thermoplastic material melts around the heated implants and flows to form a joint. Since a weld forms only in the vicinity of the implants, the process resembles spot welding and produces joints that are considerably weaker than those formed by processes that bond the entire contact area. When bonding is desired over larger areas, tapes, rods, or gaskets of thermoplastic material laced with iron oxide or metal particles can be used to concentrate the heat at the interface and provide filler material. In all cases of implant welding, the metal implant material remains as an integral part of the final assembly.

Still other processes to weld thermoplastics are based on *infrared radiation* or *microwave heating*. Laser welding has also been performed on plastics.

The most common method of joining plastics to one another and joining metal to plastic is through *mechanical fasteners*. It is important that the plastic be able to withstand the strain of fastener insertion and the localized stresses around the fastener. Conventional machine screws are rarely used, except with extremely strong plastics. Instead, there are a number of fasteners designed specifically for use with plastics. Threaded fasteners work best with thick sections. Self-tapping, thread-cutting screws are used on hard plastics, and thread-forming screws are used with softer materials. If the joint is to undergo disassembly and reassembly, threaded metal inserts may be incorporated into the part to receive the fasteners. Because of the low elastic modulus of plastic materials, snap-fit assemblies are often an attractive alternative to the use of fasteners.

As described previously in this chapter, adhesives provide an attractive means of joining plastics. Since adhesives are polymeric materials, the joint material can be selected for compatibility with the material being joined. Probably the most common application is the adhesive joining of PVC (polyvinyl chloride) pipes and fittings in household plumbing.

34.4 JOINING OF CERAMICS AND GLASS

The properties of ceramic materials are significantly different from the engineering metals, and these differences restrict or limit the processes that can be used for joining. High melting temperatures can be a significant deterrent to fusion welding. More significant, however, are the effects of low thermal conductivity and brittleness. Heating and cooling will likely result in nonuniform temperatures, and the thermally induced stresses are likely to result in cracking or fracture. The lack of useful ductility virtually eliminates any form of deformation bonding. Mechanical fasteners, and their associated threads and holes, create high concentrated stresses, and these stresses often lead to material fracture. As a result, most ceramic materials are joined by some form of adhesive bonding, brazing, diffusion or sinter bonding, or ceramic cements.

Adhesives and cements are probably the most common methods of joining ceramics to ceramics, ceramics to glasses, and ceramics to metals and other materials. The inserted material (polymer adhesive, glass or glass-ceramic frit, or ceramic cement or mortar) will bond to the surfaces and bridge what are often radically different compositions and structures.

Brazing and soldering use a low-melting-point metal or lower-melting ceramic as the intermediate material. Some materials, such as indium solders, directly wet ceramic surfaces. To promote adhesion and bonding with other joint materials, it may be necessary to first coat the ceramic with some form of metallized or deposited layer. These coatings bond to the ceramic, and the braze or solder material bonds to the coating.

Sinter bonding is a means of joining ceramic materials during their initial production. As the component pieces are held together and co-fired, diffusion bonds form across the interface while similar bonds form within the components. This process is best performed when the components are of identical material or materials with similar composition and structure. Various intermediate materials have been used to assist the joining of dissimilar ceramics.

The joining of glass is a much easier operation. Heating softens the two materials, which are then pressed together and cooled. A wide variety of heating methods are used, depending on the size, shape, and quantity of components to be joined.

34.5 JOINING OF COMPOSITES

The joining of composite materials can be an extremely complex subject, especially when one considers the variety of composites and the fact that the joint interface is likely to be a distinct disruption to the continuity of structure and properties.

Particulate composites may have the least structural difference at an interface. Laminar composites will certainly behave differently if the joint surface is a core (or multilayer) surface or a single-material exposed face. Fiber-reinforced composites, regardless of the type of fiber and fiber configuration, will certainly lack fiber continuity across the joint.

The usual joining methods tend to be those used with the matrix of the composite. Metal-matrix composites can be welded, brazed, or soldered, or joined with screws or bolts or any of the other techniques applied to metals. The techniques for polymer-matrix and ceramic-matrix follow those for plastics and ceramics, as discussed previously in this chapter.

Theoretically, all composites can be adhesively bonded, but there may be limits set by the applied stresses, operating temperatures, or size of the workpiece (since many adhesives require a thermal cure). When working with polymer-matrix composites, the adhesive is often selected to match or be compatible with the matrix polymer. In many cases, however, the adhesive is being asked to bond to already-cured polymer surfaces.

■ Key Words

adherend
adhesive
adhesive bonding
anaerobic
cleavage
continuous-surface bonds
core-to-face bonds
curing
discrete fasteners
elastomer
epoxies
evaporative adhesives
extrusion welding
friction welding
hot-gas welding
hot-melt adhesives
hot-plate welding
implant welding
integral fasteners
mechanical fastening
peel
press fit
pressure-sensitive adhesives
radiation-curing adhesive
shear
shrink fit
sinter bonding
spin welding
structural adhesive
superglue
thermoplastic
thermosetting
ultrasonic welding
vibration welding

■ Review Questions

1. What would be some of the characteristics of an ideal adhesive?
2. What are some of the newer applications that have helped promote increased use of adhesive bonding?
3. What are some of the types of materials that have been used as industrial adhesives?
4. What are some of the ways in which adhesives can be cured?
5. What is a structural adhesive?
6. Characterize the temperature range over which epoxies might be used, typical values of shear strength, and commonly observed curing times.
7. What promotes the curing of cyanoacrylates? Of anaerobics?
8. What features or characteristics might favor the selection of a silicone adhesive?
9. What are some common applications of hot-melt adhesives?
10. What features or properties are provided or enhanced by adhesive additives?
11. What are some types of nonstructural or special adhesives?
12. How can polymeric adhesives be made electrically or thermally conductive?
13. What are some of the temperature considerations that apply when selecting an adhesive?
14. What are some of the environmental conditions that might reduce the performance or lifetime of a structural adhesive?
15. Why is it desirable for adhesive joints to be designed so the adhesive is loaded in shear, tension, or compression?
16. Why are butt joints unattractive for adhesive bonding?
17. What types of joints provide large bonding areas?
18. What are some common techniques by which surfaces are prepared for adhesive bonding?
19. Why are the structural adhesives an attractive means of joining dissimilar metals or materials? Different sizes or thicknesses?
20. What are some of the other attractive properties of structural adhesives?
21. In what ways might a structural adhesive offer manufacturing ease or reduced manufacturing cost?
22. In view of the relatively low strengths of the structural adhesives, how can adhesively bonded joints attain strengths comparable to other methods of joining?
23. Why are adhesive joints unattractive for applications that involve exposure to elevated temperature? Is low temperature a concern?
24. What factors would influence the selection of a specific type of mechanical fastener or fastening method?
25. What types of fasteners are attractive if the application requires the ability to disassemble and reassemble the product?
26. What factors determine the overall effectiveness of a mechanical fastener?
27. What is an integral fastener? Provide an example.
28. What are some of the primary types of discrete fasteners?
29. How are press fits similar to shrink or expansion fits? How do they differ?
30. What are some of the major assets of mechanical fasteners?
31. What are some of the ways that fastener holes can be made in manufactured products?

32. What are some of the common causes for failure of mechanically fastened joints?
33. From a manufacturing viewpoint, why is it desirable to use standard fasteners and minimize the variety of fasteners within a given product?
34. Why can the thermoplastic polymers be welded, but not the thermosetting varieties?
35. Describe several of the plastic joining processes that use mechanical movement or friction to generate the required heat.
36. What are some of the external heat sources that can be used in the welding of plastic materials?
37. Why are the crystalline ceramic materials particularly difficult to join?
38. What is sinter bonding, and how does it join ceramic materials?
39. When materials are joined, we create interfaces between the various components. Describe the structural features that might result at the interface when we join: (a) particulate composites, (b) laminar composites, and (c) fiber-reinforced composites.

Problems

1. Some automakers are using adhesives and sealants that cure under the same conditions used for the paint-bake operation. Determine the conditions used for paint-bake, and identify some adhesives and sealants that could be used. What are some of the pros and cons of such an integration?
2. A contractor has installed aluminum siding on a house with steel nails. Use the galvanic series to evaluate the corrosion properties of this assembly. (*Note*: The aluminum is exposed to air, so it should be considered to be in its passive condition.) What do you expect will be the outcome of this fastener selection? Can you recommend a better alternative?
3. Mechanical fasteners are an attractive means of joining composite materials because they avoid exposing the composite to heat and/or high pressure. Assume that the composite is a polymer-based fiber-reinforced material with either uniaxial or woven fibers. For this particular system, what are some possible fastener-related problems? Consider joint preparation, assembly, and possible service failure.
4. The heat-resisting tiles on the U.S. space shuttle are made from heat-resisting ceramics. Determine the method or methods used to attach them to the structure. What difficulties or problems have been encountered relating to this bonding?
5. The bicycle frames used by riders in recent Tour de France races have been single-piece fiber-reinforced composites. What difficulties or property compromises might be associated with a fabrication method that uses joints? What methods might be available to join the carbon fiber–epoxy composite materials commonly used in these bicycles?
6. The processes described for the joining of plastics focused almost exclusively on the thermoplastic polymers. What types of joining techniques could be applied to thermosetting polymers? To elastomeric polymers? To ceramic materials?

www.wiley.com/college/degarmo

Chapter 34 CASE STUDY

Golf Club Heads with Insert

You are employed by a small manufacturer of sporting goods equipment, and your design team has recently proposed a new line of high-performance golf clubs. While the club head of the irons is to be a "standard" AISI 431 martensitic stainless steel investment casting, the striking face will incorporate a metal insert, as shown in the figure. This insert will be produced by powder metallurgy and will consist of a copper-based alloy laced with presized particles of tungsten carbide. After a mild acid etching of the copper matrix, the carbide particles will protrude sufficiently to better grip the surface of the ball, imparting an enhanced amount of backspin to better control the "bite" of the ball upon landing. Since its purpose is to modify the striking face, the insert is rather thin, about 1.5 to 3 mm ($^1/_{16}$ to $^1/_8$ in.). It is important that the insert be incorporated into the club face in a manner that does not dampen the impact or compromise the "feel" of the club.

1. You must devise a means of incorporating the proposed insert into the face of the club. What are some possible means of joining or bonding the dissimilar materials? What are the advantages and limitations of each of your alternatives? What would you recommend?
2. An additional joint occurs where the club head is attached to the shaft. If a graphite fiber–reinforced epoxy is being considered for the shaft, how might it be attached to the stainless steel head? If the composite shaft were selected, which joining method would you recommend? If the shafts were metal, what other methods might be possible?
3. For production simplicity, it might be preferable to use the same joining procedure at all locations. In view of your answers to Questions 1 and 2, does this appear to be a possibility for this product?
4. If the bonding process and resulting interface prove to be problematic, there may be other ways to produce a raised-carbide surface on a stainless steel golf club face. Consider processes such as thermal spray, friction-stir to embed particles, and others. What do you see as the advantages and limitations for each of these alternatives, considering both manufacturing and performance? Would you expect them to be cheaper or more expensive than the proposed insert?
5. If quality and performance were the primary objective, which of the options in Question 4 would you recommend? Why?
6. If cost minimization were to become important as you seek an edge over competitors, what would be your recommendation and why?

CHAPTER 35

SURFACE ENGINEERING

35.1 INTRODUCTION

Surface engineering is a multidisciplinary activity intended to tailor the properties of the surfaces of manufactured components so that their function and serviceability can be improved. Processes include solidification treatments such as hot-dip coatings, weld-overlay coatings, and thermal spray surfaces; deposition surface treatments such as electrodeposition, chemical vapor deposition, and physical vapor deposition; and heat treatment coatings such as diffusion coatings and surface hardening. Electroplating means the electrodeposition of an adherent metallic coating onto an object that serves as the cathode in an electrochemical reaction. The resulting surface provides wear resistance, corrosion resistance, high-temperature resistance, or electrical properties different from those in the bulk material.

Many manufacturing processes influence surface properties, which in turn may significantly affect the way the component functions in service. The demands for greater strength and longer life in components often depend on changes in the surface properties rather than the bulk properties. These changes may be mechanical, thermal, chemical, and/or physical and therefore are difficult to describe in general terms. For example, two different surface finishes on Inconel 718 can have a marked effect on the fatigue life, changing the fatigue limit from 60 ksi after gentle grinding to as low as 22 ksi using electrical discharge machining (Figure 35-1).

Many metalcutting processes specified by the manufacturing engineer to produce a specific geometry can often have the effect of producing alterations in the surface material of the component, which, in turn, produces changes in performance.

The term *surface integrity* was coined by Field and Kahles in 1964 in reference to the nature of the surface condition that is produced by the manufacturing process. If we view the process as having five main components (workpiece, tool, machine tool, environment, and process variables), we see that surface properties can be altered by all of these parameters (see Table 35-1) by producing the following:

- High temperatures involved in the machining process
- Plastic deformation of the work material (residual stress)
- Surface geometry (roughness, cracks, distortion)
- Chemical reactions, particularly between the tool and the workpiece

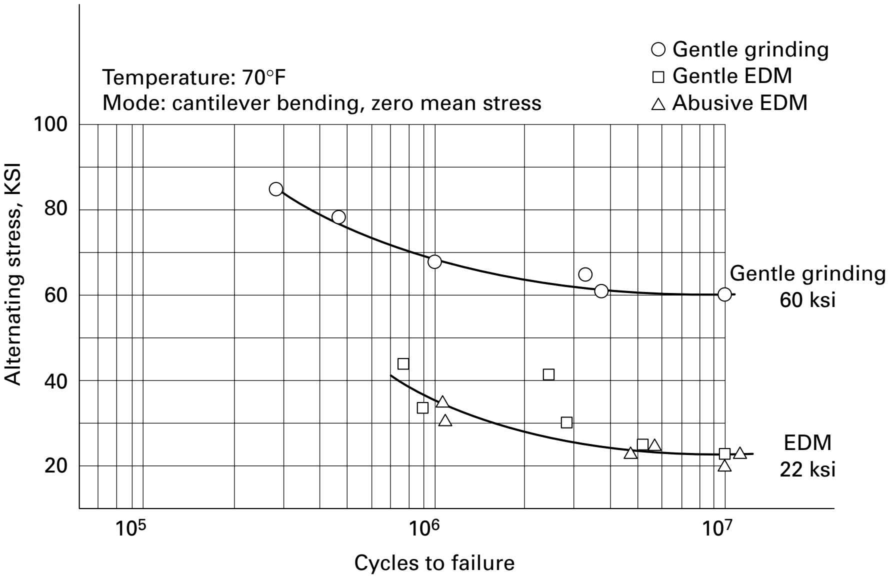

FIGURE 35-1 Fatigue strength of Inconel 718 components after surface finishing by grinding or EDM. *(Field and Kahles, 1971).*

More specifically, *surface integrity* refers to the impaired or enhanced surface condition of a component or specimen that influences its performance in service. Surface integrity has two aspects: topography characteristics and surface-layer characteristics. Topography is made up of surface roughness, waviness, errors of form, and flaws (Figure 35-2).

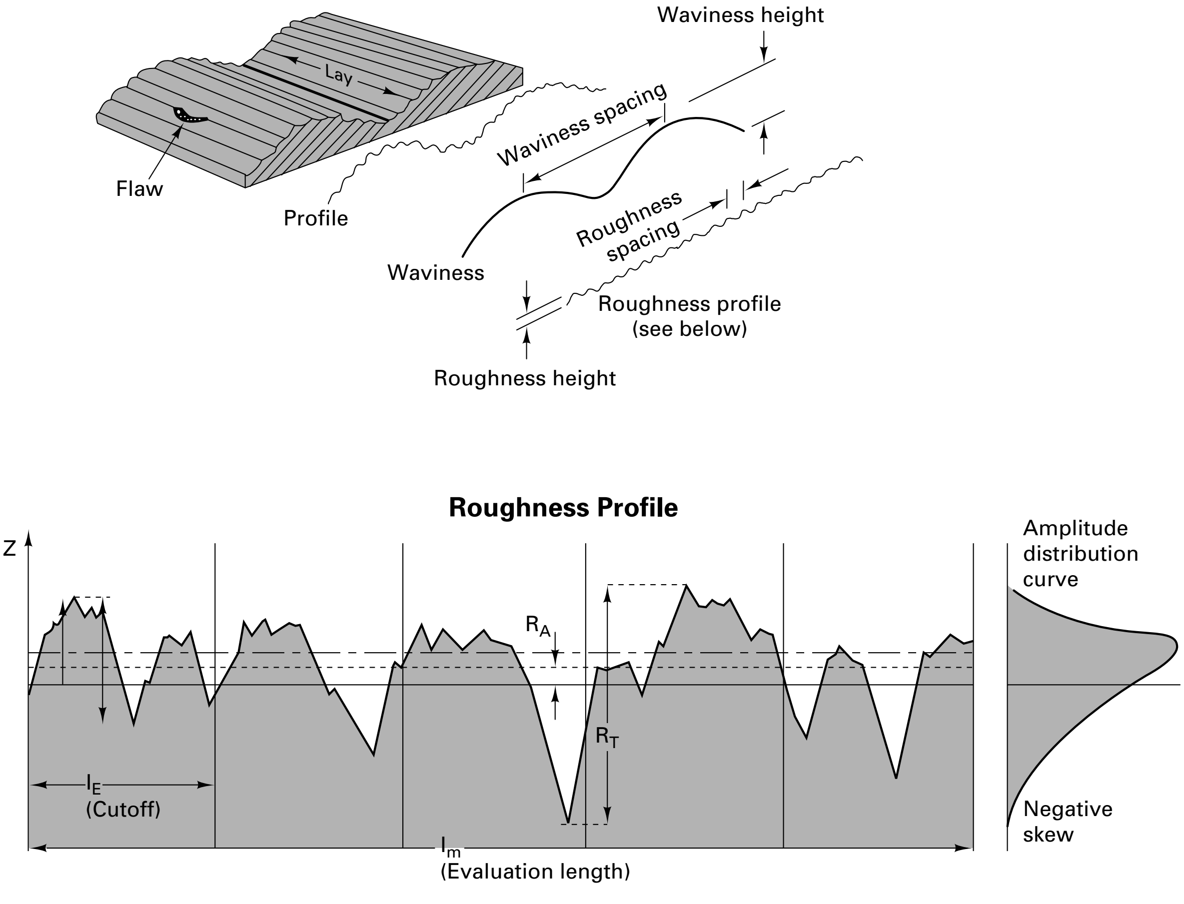

R_T = Maximum roughness depth (peak to valley) along l_m

R_A = Arithmetic roughness average

FIGURE 35-2 Machining processes produce surface flaws, waviness, and roughness that can influence the performance of the component.

TABLE 35-1 Characteristics of Manufacturing Processes That Affect Surface Integrity

Workpiece–Tool–Machine–Environment–Process Variables

Workpiece characteristics

- Geometry
  - Shape
  - Dimensions
- Material
  - Type
  - Route of manufacture
  - Mechanical properties
    - Elastic constants
    - Plastic constants
  - Physical properties
    - Melting point
    - Thermal diffusivity, conductivity, capacity
    - Coefficient of thermal expansion
    - Phase transformations
  - Chemical properties
    - Chemical composition
    - Chemical affinity to tool material and environment
  - Metallurgical properties
    - Structure
    - Grain size
    - Hardness

Environment characteristics

- Type of medium (gas, fluid, mist)
- Lubricity
- Cooling ability
- Flow rate
- Temperature
- Chemical composition

Machine tool characteristics

- Error motions

Tool characteristics

- Tool body
- Type of tool
- Size
- Shape
- Number of cutting edges

- Cutting edge
  - Shape (angles)
  - Nose geometry/topography
  - Microgeometry
  - Wear
- Material
  - Type
  - Coating
    - Type
    - Thickness
    - Number and kind of layers
- Mechanical properties
    - Elastic constants
    - Plastic properties
    - Physical properties
    - Thermal diffusivity, conductivity, capacity
  - Coefficient of thermal expansion
  - Chemical properties
    - Chemical composition
    - Chemical affinity to tool material
  - Metallurgical properties
    - Structure
    - Grain size

Process variables

- Speed
- Feed
- Depth of cut

Source: Advanced Manufacturing Engineering, Vol. 1, July 1989.

A typical roughness profile includes the peaks and valleys that are considered separately from waviness. Flaws also add to texture but should be measured independent of it. Changes in the surface layer, as a result of processing, include plastic deformation, residual stresses, cracks, and other metallurgical changes (hardness, overaging, phase changes, recrystallization, intergranular attack, and hydrogen embrittlement). See Figure 30-2. The surface layer will always contain local surface deformation due to any machining passes.

The material removal processes generate a wide variety of surfaces textures, generally referred to as *surface finish*. The cutting processes leave a wide variety of surface patterns on the materials. *Lay* is the term used to designate the direction of the predominant surface pattern produced by the machining process. In addition, certain other terms and symbols have been developed and standardized for specifying the surface quality. The most important terms are *surface roughness*, *waviness*, and *lay* (Figure 35-3). *Roughness* refers to the finely spaced surface irregularities. It results from machining operations in the case of machined surfaces. *Waviness* is surface irregularity of greater spacing than in roughness. It may be the result of warping, vibration, or the work being deflected during machining.

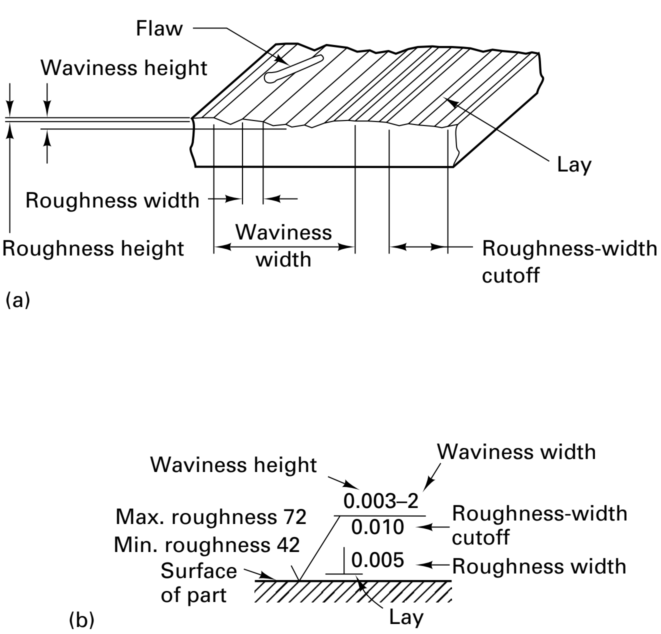

Lay symbols

= Parallel to the boundary line of the nominal surface
⊥ Perpendicular to the boundary line of the nominal surface
X Angular in both directions to the boundary line of the nominal surface
M Multidirectional
C Approximately circular relative to the center
R Approximately radial relative to the center of the nominal surface

(c)

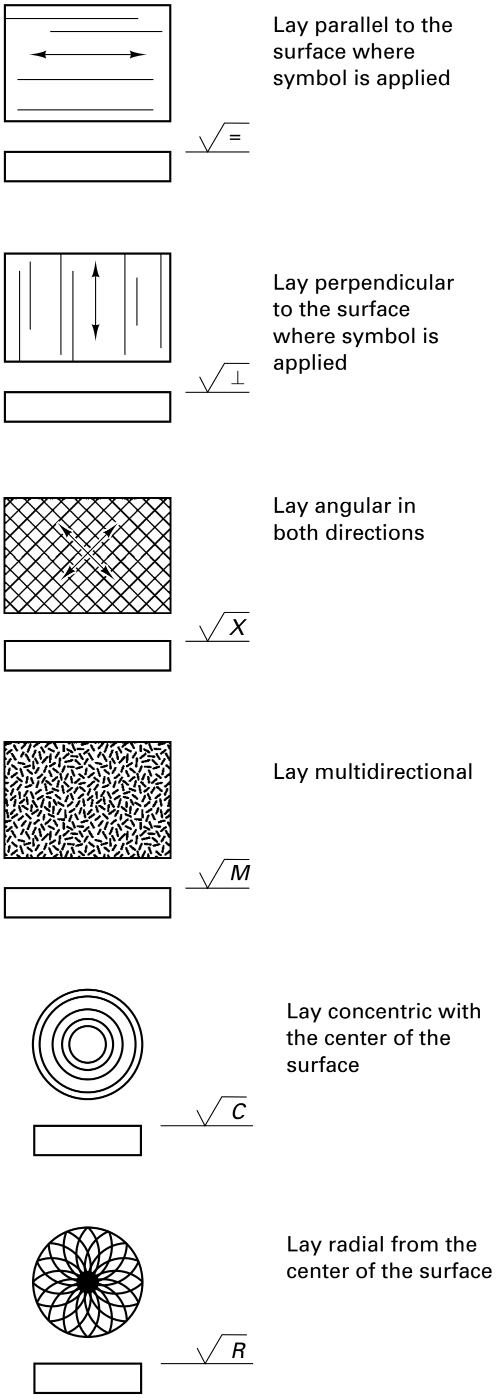

FIGURE 35-3 (a) Terminology used in specifying and measuring surface quality; (b) symbols used on drawing by part designers, with definitions of symbols; (c) lay symbols; (d) lay symbols applied on drawings.

A variety of instruments are available for measuring surface roughness and surface profiles. The majority of these devices use a diamond stylus that is moved at a constant rate across the surface, perpendicular to the lay pattern. The rise and fall of the stylus is detected electronically [often by a Linear Variable Differential Transformer Device (LVTD)], is amplified and recorded on a strip-chart, or is processed electronically to produce average or root-mean-square readings for a meter (Figure 35-4). The unit containing the stylus and the driving motor may be handheld or supported by skids that ride on the workpiece or some other supporting surface.

Roughness is measured by the height of the irregularities with respect to an average line. These measurements are usually expressed in micrometers or microinches.

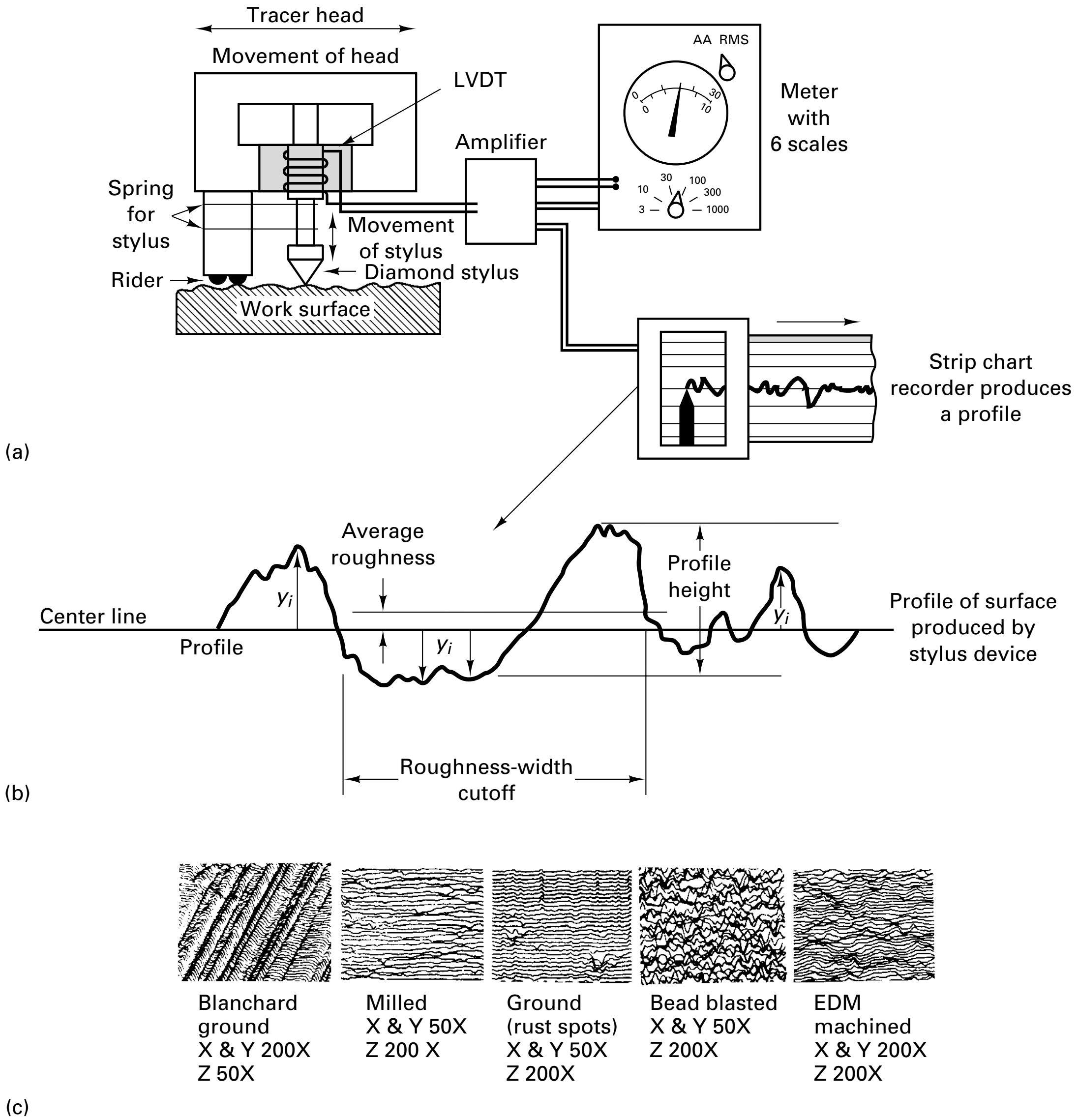

FIGURE 35-4 (a) Schematic of stylus profile device for measuring surface roughness and surface profile with two readout devices shown: a meter for AA or rms values and a strip chart recorder for surface profile. (b) Profile enlarged. (c) Examples of surface profiles.

In most cases, the arithmetical average (AA) is used. In terms of the measurements, the AA would be as follows:

$$\mathrm{AA} = \frac{\sum_{i=1}^{n} y_i}{n}$$

Cutoff refers to the sampling length used for the calculation of the roughness height. When it is not specified, a value of 0.030 in. (0.8 mm) is assumed. In the previous equation, y_i is a vertical distance from the centerline and n is the total number of vertical measurements taken within a specified cutoff distance. This average roughness value is also called R_a, occasionally used is the *root-mean-square* (rms) value, which is defined as

$$\mathrm{rms} = \sqrt{\frac{\sum_{i=1}^{n} y_i^2}{n}}$$

The resolution of stylus profile devices is determined by the radius or the diameter of the tip of the stylus. When the magnitude of the geometric features begins to

FIGURE 35-5 Typical machined steel surface as created by face milling and examined in the SEM. A micrograph (same magnification) of a 0.00005-in. stylus tip has been superimposed at the top.

approach the magnitude of the tip of the stylus, great caution should be used in interpreting the output from these devices. As a case in point, Figure 35-5 shows a scanning electron micrograph of a face-milled surface on which has been superimposed (photographically) a scanning electron micrograph of the tip of a diamond stylus (tip radius of 0.0005 in.). Both micrographs have the same final magnification. Surface flaws of the same general size as the roughness created by the machining process are difficult to resolve with the stylus-type device, where both these features are about the same size as the stylus tip.

This example points out the difference between resolution and detection. Stylus tracing devices can often detect the presence of a surface crack, step, or ridge on the part but cannot resolve the geometry of the defect when the defect is of the same order of magnitude as the stylus tip or smaller.

Another problem with these devices is that they produce a reading (a line on the chart) where the stylus tip is not touching the surface, as is demonstrated in Figure 35-6a, which shows the *S* from the word *TRUST* on a U.S. dime. The scanning electron microscope (SEM) micrograph was made after the topographical map of Figure 35-6b had been made. Both figures are at about the same magnification. The tracks produced by the stylus tip are easily seen in the micrograph. Notice the difference between the features shown in the micrograph and the trace, indicating that the stylus tip was not in contact with the surface many times during its passage over the surface (left no track in the surface), yet the trace itself is continuous.

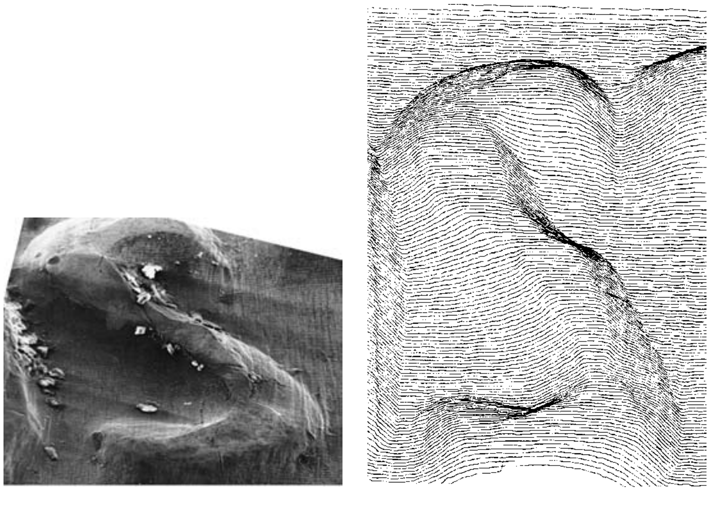

(a) (b)

FIGURE 35-6 (a) SEM micrograph of a U.S. dime, showing the *S* in the word *TRUST* after the region has been traced by a stylus-type machine. (b) Topographical map of the *S* region of the word *TRUST* from a U.S. dime [compare to part (a)].

The range of surface roughnesses that are typically produced by various manufacturing processes is indicated in Figure 35-7, which is a very general picture of typical ranges associated with these processes. However, one can usually count on its being more expensive to generate a fine finish (low roughness). To aid designers, metal samples with various levels of surface roughness are available.

All of the processes used to manufacture components are important if their effects are present in the finished part. It is convenient to divide processes that are used to manufacture parts into three categories: traditional, nontraditional, and finishing treatments. In *traditional processes* the tool contacts the workpiece. Examples are grinding, milling, and turning. These material removal processes will inflict damage to the surface if improper parameters are used. Examples of improper parameters are dull tools, excessive infeed, inadequate coolant, and improper grinding wheel hardness. The *nontraditional processes* have intrinsic characteristics that, even if well controlled, will change the surface. In these processes the workpiece does not touch the tool. Electrochemical machining (ECM), electrical discharge machining (EDM), laser machining, and chemical milling are examples of

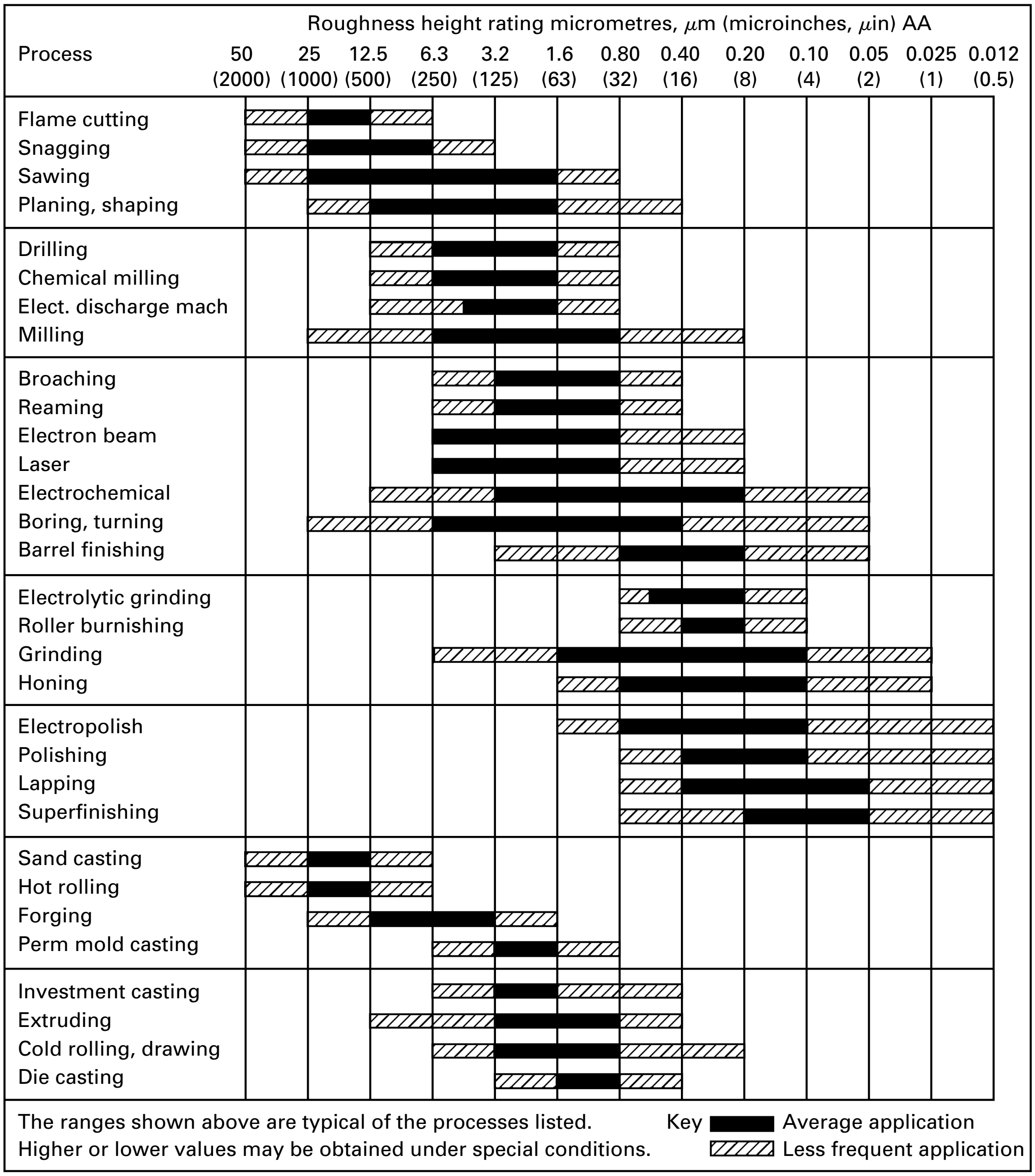

Extracted from General Motors Drafting Standards, June 1973 revision

FIGURE 35-7 Comparison of surface roughness produced by common production processes. *(Courtesy of* American Machinist.*)*

nontraditional methods. Such methods can leave stress-free surfaces, remelted layers, and excessive surface roughness. *Finishing treatments* can be used to negate or remove the impact of both traditional and nontraditional processes as well as providing good surface finish. For example, residual tensile stresses can be removed by shot peening or roller burnishing. Chemical milling can remove the recast layer left by EDM.

The objectives of the surface-modification processes can be quite varied. Some are designed to clean surfaces and remove the kinds of defects that occur during processing or handling (such as scratches, pores, burrs, fins, and blemishes). Others further improve or modify the products' appearance, providing features such as smoothness, texture, or color. Numerous techniques are available to improve resistance to wear or corrosion, or to reduce friction or adhesion to other materials. Scarce or costly materials can be conserved by making the interior of a product from a cheaper, more common material and then coating or plating the product surface.

As with all other processes, surface treatment requires time, labor, equipment, and material handling, and all of these have an associated cost. Efficiencies can be realized through process optimization and the integration of surface treatment into the entire manufacturing system. Design modifications can often facilitate automated or bulk finishing, eliminating the need for labor-intensive or single-part operations. Process selection should further consider the size of the part, the shape of the part, the quantity to be processed, the temperatures required for processing, the temperatures encountered during subsequent use, and any dimensional changes that might occur due to the surface treatment. Through knowledge of the available processes and their relative advantages and limitations, finishing costs can often be reduced or eliminated while maintaining or improving the quality of the product.

In addition to the above, the field of surface finishing has recently undergone another significant change. Many chemicals that were once "standard" to the field, such as cyanide, cadmium, chromium, and chlorinated solvents, have now come under strict government regulation. Wastewater treatment and waste disposal have also become significant concerns. As a result, processes may have to be modified or replacement processes may have to be used.

Because of their similarity to other processes, many surface finishing techniques have been presented elsewhere in the book. The *case hardening* techniques, both selective heating (flame, induction, and laser hardening) and altered surface chemistry (diffusion methods such as carburizing, nitriding, and carbonitriding), are presented in Chapter 5 as variations of heat treating. *Shot peening* and *roller burnishing* are presented in Chapter 17 as cold-working processes. *Roll bonding* and explosive bonding are discussed in Chapter 15 as means of producing laminar composites. *Hard facing* and metal spraying are included in Chapter 33 as adaptations of welding techniques. Chemical vapor deposition and physical vapor deposition are discussed in Chapters 19 and 21. Sputtering and ion implantation are also discussed in Chapter 19 as processes needed in electronics manufacturing. In this chapter we focus on techniques for cleaning and surface preparation as well as the remaining methods of surface finishing or surface modification.

35.2 MECHANICAL CLEANING AND FINISHING

BLAST CLEANING

It is not uncommon for the various manufacturing processes to produce certain types of surface contamination. Sand from the molds and cores used in casting often adheres to product surfaces. Scale (metal oxide) can be produced whenever metal is processed at elevated temperatures. Oxides such as rust can form if material is stored between operations. These and other contaminants must be removed before decorative or protective surfaces can be produced. While vibratory shaking can be useful, some form of *blast cleaning* is usually required to remove the foreign material. Blast cleaning uses a media (abrasive) propelled into the surface using air, water, or even a wheel (wheel blasting uses a high-rpm blocked wheel to deliver the media). The bulk of the work is done by kinetic energy of the impacting media; $KE = {}^{1}/_{2}\,MV^{2}$ where m = mass of the median and v = the velocity. Abrasives, steel grit, metal shot, fine glass shot, plastic beads, and even CO_2 are mechanically impelled against the surface to be cleaned. When sand is used, it should be clean, sharp-edged silica sand. Steel grit tends to clean more rapidly and generates much less dust, but it is more expensive and less flexible.

When the parts are large, it may be easier to bring the cleaner to the part rather than the part to the cleaner. A common technique for such applications is *sand blasting* or *shot blasting,* where the abrasive particles are carried by a high-velocity blast of air emerging from a nozzle with about a $^3/_8$-in . opening. Air pressures between 60 and 100 psi, producing particle speeds of 400 mph, are common when cleaning ferrous metals, and 10 to 60 psi is common for nonferrous metals. The abrasive may be sand or shot, or materials such as walnut shells, dry-ice pellets, or even baking soda. Pressurized water can also be used as a carrier medium.

When production quantities are large or the parts are small, the operation can be conducted in an enclosed hood, with the parts traveling past stationary nozzles. For large parts or small quantities, the blast may be delivered manually. Protective clothing and breathing apparatus must be provided and precautions taken to control the spread of the resulting dust. The process may even require a dedicated room or booth that is equipped with integrated air pollution control devices.

From a manufacturing perspective, these processes are limited to surfaces that can be reached by the moving abrasive (line-of-sight) and cannot be used when sharp edges or corners must be maintained (since the abrasive tends to round the edges).

BARREL FINISHING OR TUMBLING

Barrel finishing or *tumbling* is an effective means of finishing large numbers of small parts. In the Middle Ages, wooden casks were filled with abrasive stones and metal parts and were rolled about until the desired finish was obtained. Today, modifications of this technique can be used to deburr, radius, descale, remove rust, polish, brighten, surface-harden, or prepare parts for further finishing or assembly. The amount of stock removal can vary from as little as 0.0001 to as much as 0.005 in.

In the typical operation, the parts are loaded into a special barrel or drum until a predetermined level is reached. Occasionally, no other additions are made, and the parts are simply tumbled against one another. In most cases, however, additional media of metal slugs or abrasives (such as sand, granite chips, slag, or ceramic pellets) are added. Rotation of the barrel causes the material to rise until gravity causes the uppermost layer to cascade downward in a "landslide" movement, as depicted in Figure 35-8. The sliding produces abrasive cutting that can effectively remove fins, flash, scale, and adhered sand. Since only a small portion of the load is exposed to the abrasive action, long times may be required to process the entire contents.

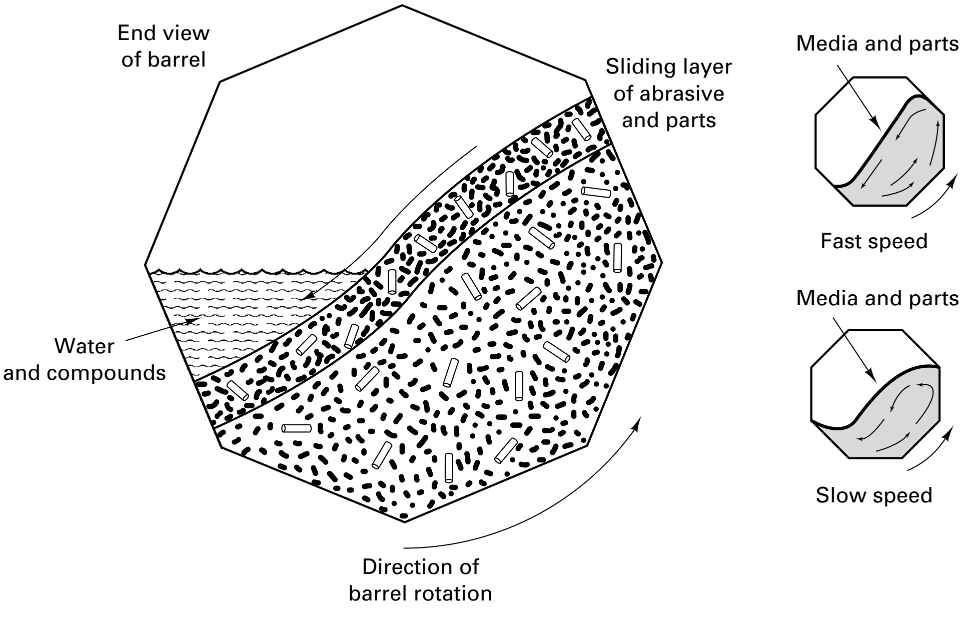

FIGURE 35-8 Schematic of the blow of material in tumbling or barrel finishing. The parts and media mass typically account for 50 to 60% of capacity.

Increasing the speed of rotation adds centrifugal forces that cause the material to rise higher in the barrel. The enhanced action can often accelerate the process, provided that the speed is not so great as to destroy the cascading action and that the additional action does not damage the workpiece. By a suitable selection of abrasives, filler, barrel size, ratio of workpieces to abrasive, fill level, and speed, a wide range of parts can be tumbled successfully. Delicate parts may have to be attached to racks within the barrel to reduce their movement while permitting the media to flow around them.

Natural and synthetic abrasives are available in a wide range of sizes and shapes, including those depicted in Figure 35-9, that enable the finishing of complex parts with irregular openings. The various media are often mixed in a given load, so that some will reach into all sections and corners to be cleaned.

Tumbling is usually done dry, but it can also be performed with an aqueous solution in the barrel. Chemical compounds can be added to the media to assist in cleaning, or descaling, or to provide features such as rust inhibition. Support equipment usually assists with loading and unloading the barrels as well as, with the separation of the workpieces from the abrasive media. The latter operation often uses mesh screens with selected size openings.

Barrel tumbling can be a very inexpensive way to finish large quantities of small parts and produce rounded edges and corners. Unfortunately, the abrasive action occurs on all surfaces and cannot be limited to selected areas. The cycle time is often long, and the process can be quite noisy.

In the *barrel burnishing* process, no cutting action is desired. Instead, the parts are tumbled against themselves or with media such as steel balls, shot, rounded-end pins, or ballcones. If the original material is free of visible scratches and pits, the combination of peening and rubbing will reduce minute irregularities and produce a smooth, uniform surface.

Barrel burnishing is normally done wet, using a solution of water and lubricating or cleaning agents, such as soap or cream of tartar. Because the rubbing action between the work and the media is very important, the barrel should not be loaded more than half full, and the volume ratio of media to work should be about 2:1 so the workpieces rub against the media, not each other. The speed of rotation should be set to maintain the cascading action and not fling the workpieces free of the tumbling mass.

Centrifugal barrel tumbling places the tumbling barrel at the end of a rotating arm. This adds centrifugal force to the weight of the parts in the barrel and can accelerate the process by as much as 25 to 50 times.

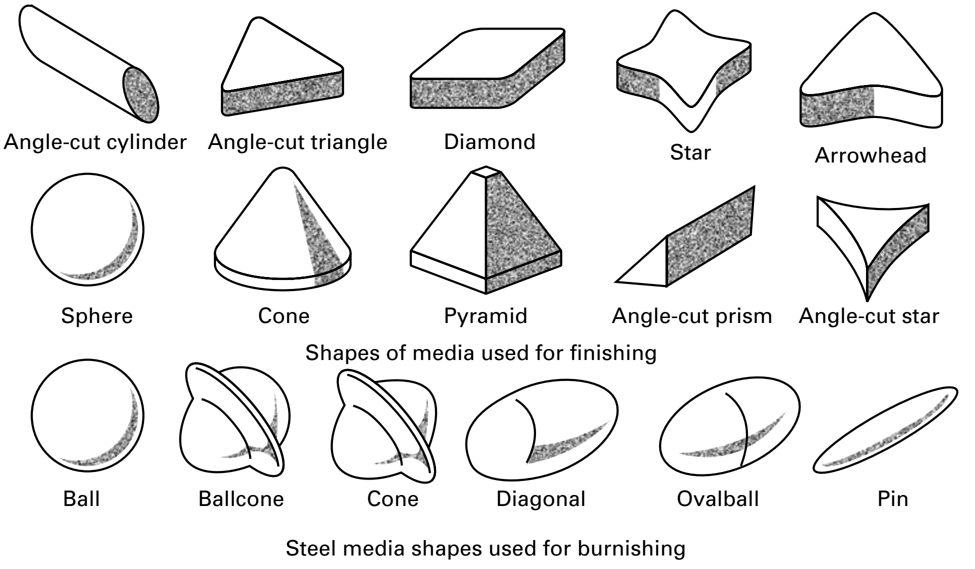

FIGURE 35-9 Synthetic abrasive media are available in a wide variety of sizes and shapes. Through proper selection, the media can be tailored to the product being cleaned.

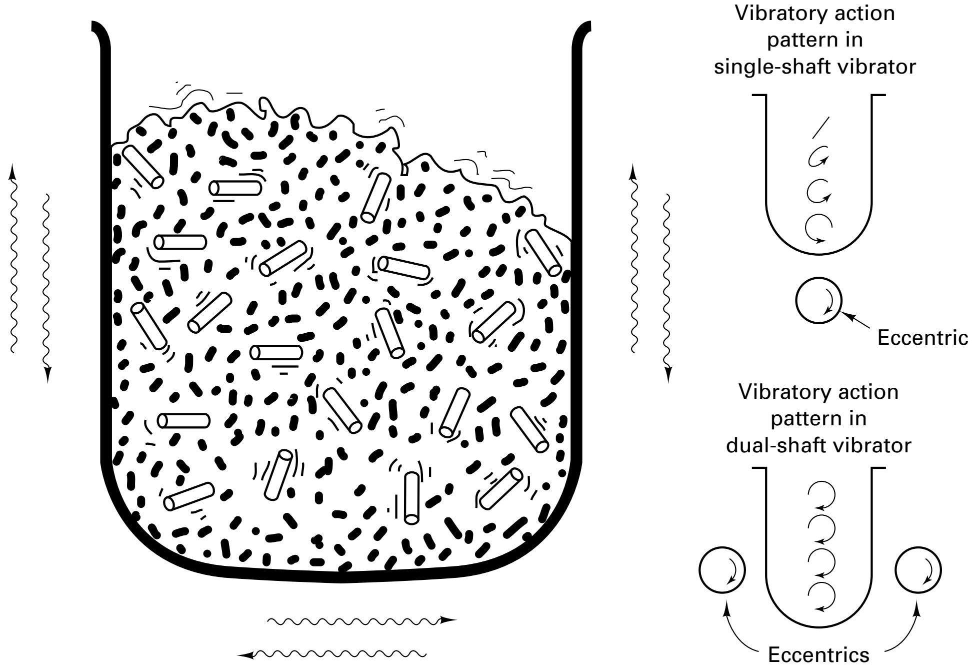

FIGURE 35-10 Schematic diagram of a vibratory-finishing tub loaded with parts and media. The single eccentric shaft drive provides maximum motion at the bottom, which decreases as one moves upward. The dual-shaft design produces more uniform motion of the tub and reduces processing time.

In *spindle finishing* the workpieces are attached to rotating shafts, and the assembly is immersed in media moving in a direction opposite to part rotation. This process is commonly applied to cylindrical parts and avoids the impingement of workpieces on one another. The abrasive action is accelerated, but time is required for fixturing and removal of the parts.

VIBRATORY FINISHING

Vibratory finishing is a versatile process widely used for deburring, radiusing, descaling, burnishing, cleaning, brightening, and fine finishing. In contrast to the barrel processing, *vibratory finishing* is performed in open containers. As illustrated in Figure 35-10, tubs or bowls are loaded with workpieces and media and are vibrated at frequencies between 900 and 3600 cycles per minute. The specific frequency and amplitude are determined by the size, shape, weight, and material of the pan, as well as the media and compound. Because the entire load is under constant agitation, cycle times are less than with barrel operations. The process is less noisy and is easily controlled and automated. In addition, the open tubs allow for direct observation during the process, which can also deburr or smooth internal recesses or holes.

MEDIA

The success of any of the mass-finishing processes depends greatly on *media* selection and the ratio of media to parts, as presented in Table 35-2. The media may prevent the parts from impinging upon one another as it simultaneously cleans and finishes. Fillers, such as scrap punchings, minerals, leather scraps, and sawdust, are often added to provide additional bulk and cushioning.

Natural abrasives include slag, cinders, sand, corundum, granite chips, limestone, and hardwood shapes, such as pegs, cylinders, and cubes. Synthetic media typically contain 50 to 70 wt% of abrasives, such as alumina (Al_2O_3), emery, flint, and silicon carbide. This material is embedded in a matrix of ceramic, polyester, or resin plastic, which is softer than the abrasive and erodes, allowing the exposed abrasive to perform the work. The synthetics are generally produced by some form of casting operation, so their sizes and shapes are consistent and reproducible (as opposed to the random sizes and shapes of the natural media). Steel media with no added abrasive are frequently specified for burnishing and light deburring.

TABLE 35-2 Typical Media-to-Part Ratios for Mass Finishing

Media/Part Ratio by Volume	Typical Application
0:1	Part-on-part processing or burr removal without media
1:1	Produces very rough surfaces and is suitable for parts in which part-on-part damage is not a problem
2:1	Somewhat less severe part-on-part damage, but more action from less media
3:1	May be acceptable for very small parts and very small media. Part-on-part contact is likely on larger and heavier parts
4:1	In general, a good average ratio for many parts; a good ratio for evaluating a new deburring process
5:1	Better for nonferrous parts subject to part-on-part damage
6:1	Suitable for nonferrous parts, especially preplate surfaces on zinc parts with resin-bonded media
8:1	For improved preplate surfaces with resin-bonded media
10:1	Produces very fine finishes

Source: American Machinist, August 1983.

Media selection should also be correlated with part geometry, since the abrasives should be able to contact all critical surfaces without becoming lodged in recesses or holes. This requirement has resulted in a wide variety of sizes and shapes, including those presented in Figure 35-9. The different abrasives, sizes, and shapes can be selected or combined to perform tasks ranging from light deburring with a very fine finish to heavy cutting with a rough surface.

COMPOUNDS

A variety of functions are performed by the *compounds* that are added in addition to the media and workpieces. These compounds can be liquid or dry, abrasive or nonabrasive, and acid, neutral, or alkaline. They are often designed to assist in deburring, burnishing, and abrasive cutting, as well as to provide cleaning, descaling, or corrosion inhibition.

In deburring and finishing, many small particles are abraded from both the media and the workpieces, and these must be suspended in the compound solution to prevent them from adhering to the parts. Deburring compounds also act to keep the parts and media clean and to inhibit corrosion. Burnishing compounds are often selected for their ability to develop desired colors and enhance brightness.

Cleaning compounds such as dilute acids and soaps are designed to remove excessive soils from both the parts and media and are often specified when the incoming materials contain heavy oil or grease. Corrosion inhibitors can be selected for both ferrous and nonferrous metals and are particularly important when steel media are being used.

Another function of the compounds may be to condition the water when aqueous solutions are being used. Consistent water quality, in terms of "hardness" and metal ion content, is important to ensure uniform and repeatable finishing results. Liquid compounds may also provide cooling to both the workpieces and the media.

SUMMARY OF MASS-FINISHING METHODS

The barrel and vibratory finishing processes are really quite simple and economical and can process large numbers of parts in a batch procedure. Soft, nonferrous parts can be finished in as little as 10 minutes, while the harder steels may require 2 hours or more. Sometimes the operations are sequenced, using progressively finer abrasives. Figure 35-11 shows a variety of parts before and after the mass-finishing operation, using the triangular abrasive shown with each component.

Despite the high volume and apparent success, these processes may still be as much art as science. The key factors of workpiece, equipment, media, and compound are all interrelated, and the effect of changes can be quite complex. Media, equipment, and compounds are often selected by trial and error, with various approaches being tested until the desired result is achieved. Even then, maintenance of consistent results may still be difficult.

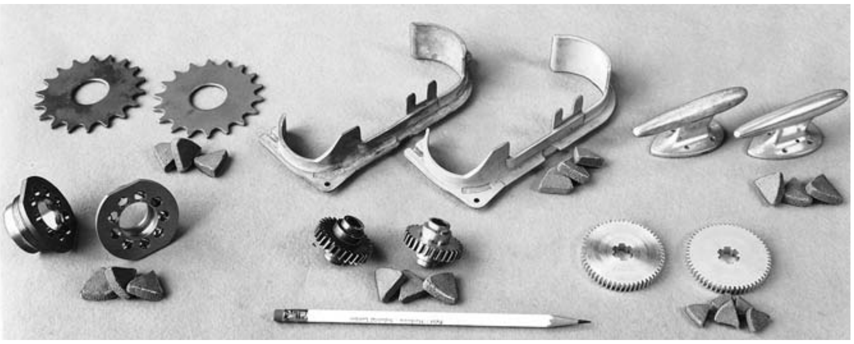

FIGURE 35-11 A variety of parts before and after barrel finishing with triangular-shaped media. *(Courtesy of Norton Company.)*

BELT SANDING

In the *belt sanding* operation, the workpieces are held against a moving abrasive belt until the desired degree of finish is obtained. Because of the movement of the belt, the resulting surface contains a series of parallel scratches with a texture set by the grit of the belt. When smooth surfaces are desired, a series of belts may be employed, with progressively finer grits.

The ideal geometry for belt sanding is a flat surface, for the belt can be passed over a flat table where the workpiece can be held firmly against it. Belt sanding is frequently a hand operation and is therefore quite labor intensive. Furthermore, it is difficult to apply when the geometry includes recesses or interior corners. As a result, belt sanding is usually employed when the number of parts is small and the geometry is relatively simple. See Chapter 28.

WIRE BRUSHING

High-speed rotary *wire brushing* is sometimes used to clean surfaces and can also impart some small degree of material removal or smoothing. The resulting surface consists of a series of uniform curved scratches. For many applications, this *may* be an acceptable final finish. If not, the scratches can easily be removed by barrel finishing or buffing.

Wire brushing is often performed by hand application of a small workpiece to the brush or the brush to a larger workpiece. Automatic machines can also be used where the parts are moved past a series of rotating brushes. In another modification the brushes are replaced with plastic or fiber wheels that are loaded with abrasive.

BUFFING

Buffing is a polishing operation in which the workpiece is brought into contact with a revolving cloth wheel that has been charged with a fine abrasive, such as polishing rouge. The “wheels”, which are made of disks of linen, cotton, broadcloth, or canvas, achieve the desired degree of firmness through the amount of stitching used to fasten the layers of cloth together. When the operation calls for very soft polishing or polishing into interior corners, the stitching may be totally omitted, the centrifugal force of the wheel rotation being sufficient to keep the layers in the proper position. Various types of polishing compounds are also available, with many consisting of ferric oxide particles in some form of hinder or carrier.

The buffing operation is very similar to the lapping process that was discussed in Chapter 27. In buffing, however, the abrasive removes only minute amounts of metal from the workpiece. Fine scratch marks can be eliminated and oxide tarnish can be removed. A smooth, reflective surface is produced. When soft metals are buffed, a small amount of metal flow may occur, which further helps to reduce high spots and produce a high polish.

In manual buffing, the workpiece is held against the rotating wheel and manipulated to provide contact with all critical surfaces. Once again, the labor costs can be quite extensive. If the workpieces are not too complex, semiautomatic machines can be used, where the workpieces are held in fixtures and move past a series of individual buffing wheels. By designing the part with buffing in mind, good results can be obtained quite economically.

ELECTROPOLISHING

Electropolishing is the reverse of electroplating (discussed later in this chapter) since material is removed from the surface rather than being deposited. A DC electrolytic circuit is constructed with the workpiece as the anode. As current is applied, material is stripped from the surface, with material removal occurring preferentially from any raised location. Unfortunately, it is not economical to remove more than about 0.001 in. of material from any surface. However, if the initial surface is sufficiently smooth (less than 8 in. rms), and the grain size is small, the result will be a smooth polish with irregularities of less than 2 μin.—a mirrorlike finish.

Electropolishing was originally used to prepare metallurgical specimens for examination under the microscope. It was later adopted as a means of polishing stainless steel sheets and other stainless products. It is particularly useful for polishing irregular shapes that would be difficult to buff.

35.3 CHEMICAL CLEANING

Chemical cleaning operations are effective means of removing oil, dirt, scale, or other foreign material that may adhere to the surface of a product, as a preparation for subsequent painting or plating. Because of environmental, health, and safety concerns, however, many processes that were once the industrial standard have now been eliminated or substantially modified. While the major concern with the mechanical methods has usually been airborne particles, the chemical methods often require the disposal of spent or contaminated solutions, and they occasionally use hazardous, toxic, or environmentally unfriendly materials. Chlorofluorocarbons (CFCs) and carbon tetrachloride, for example, have been identified as ozone-depleting chemicals and have been phased out of commercial use. Process changes to comply with added regulations can significantly shift process economics. Manufacturers must now ask themselves if a part really has to be cleaned, what soils have to be removed, how clean the surfaces have to be, and how much they are willing to pay to accomplish that goal. Selection of the cleaning method will depend on cost of the equipment, power, cleaning materials, maintenance and labor, plus the cost of recycling and disposal of materials. Specific processes will depend on the quantity of parts to be processed (part per hour), part configuration, part material, desired surface finish, temperature of the process, and flexibility. Manufacturers want machines they can integrate with manufacturing cells so changes in products can be quickly handled.

ALKALINE CLEANING

Alkaline cleaning is basically the "soap and water" approach to parts cleaning and is a commonly used method for removing a wide variety of soils (including oils, grease, wax, fine particles of metal, and dirt) from the surfaces of metals. The cleaners are usually complex solutions of alkaline salts, additives to enhance cleaning or surface modification, and surfactants or soaps that are selected to reduce surface tension and displace, emulsify, and disperse the insoluble soils. The actual cleaning occurs as a result of one or more of the following mechanisms: (1) saponification, the chemical reaction of fats and other organic compounds with the alkaline salts; (2) displacement, where soil particles are lifted from the surface; (3) dispersion or emulsification of insoluble liquids; and (4) dissolution of metal oxides.

Alkaline cleaners can be applied by immersion or spraying, and they are usually heated to accelerate the cleaning action. The cleaning is then followed by a water rinse to remove all residue of the cleaning solution, as well as flush away some small amounts of remaining soil. A drying operation may also be required since the aqueous cleaners do not evaporate quickly, and some form of corrosion inhibitor (or rust preventer) may be required, depending on subsequent use.

Environmental issues relating to alkaline cleaning include (1) reducing or eliminating phosphate effluent, (2) reducing toxicity and increasing biodegradability, and (3) recycling the cleaners to extend their life and reduce the volume of discard.

SOLVENT CLEANING

In *solvent cleaning*, oils, grease, fats, and other surface contaminants are removed by dissolving them in organic solvents derived from coal or petroleum, usually at room temperature. The common solvents include petroleum distillates (such as kerosene, naphtha, and mineral spirits), chlorinated hydrocarbons (such as methylene chloride and trichloroethylene), and liquids such as acetone, benzene, toluene, and the various alcohols. Small parts are generally cleaned by immersion, with or without assisting agitation, or by spraying. Products that are too large to immerse can be cleaned by spraying or wiping. The process is quite simple, and capital equipment costs are rather low. Drying is usually accomplished by simple evaporation.

Solvent cleaning is an attractive means of cleaning large parts, heat-sensitive products, materials that might react with alkaline solutions (such as aluminum, lead, and zinc), and products with organic contaminants (such as soldering flux or marking crayon). Virtually all common industrial metals can be cleaned, and the size and shape of the workpiece are rarely a limitation. Insoluble contaminants, such as metal oxides, sand, scale, and the inorganic fluxes used in welding, brazing, and soldering, cannot be removed by solvents. In addition, resoiling can occur as the solvent becomes contaminated. As a result, solvent cleaning is often used for preliminary cleaning.

Many of the common solvents have been restricted because of health, safety, and environmental concerns. Fire and excessive exposure are common hazards. Adequate ventilation is critical. Workers should use respiratory devices to prevent inhalation of vapors and wear protective clothing to minimize direct contact with skin. In addition, solvent wastes are often considered to be hazardous materials and may be subject to high disposal cost.

VAPOR DEGREASING

In *vapor degreasing*, the vapors of a chlorinated or fluorinated solvent are used to remove oil, grease, and wax from metal products. A nonflammable solvent, such as trichloroethylene, is heated to its boiling point, and the parts to be cleaned are suspended in its vapors. The vapor condenses on the work and washes the soluble contaminants back into the liquid solvent. Although the bath becomes dirty, the contaminants rarely volatilize at the boiling temperature of the solvent. Therefore, vapor degreasing tends to be more effective than cold solvent cleaning, since the surfaces always come into contact with clean solvent. Since the surfaces become heated by the condensing solvent, they dry almost instantly when they are withdrawn from the vapor.

Vapor degreasing is a rapid, flexible process that has almost no visible effect on the surface being cleaned. It can be applied to all common industrial metals, but the solvents may attack rubber, plastics, and organic dyes that might be present in product assemblies. A major limitation is the inability to remove insoluble soils, forcing the process to be coupled with another technique, such as mechanical or alkaline cleaning. Since hot solvent is present in the system, the process is often accelerated by coupling the vapor cleaning with an immersion or spray using the hot liquid.

Unfortunately, environmental issues have forced the almost complete demise of the process. While the vapor degreasing solvents are chemically stable, have low toxicity, are nonflammable, evaporate quickly, and can be recovered for reuse, the CFC materials have been identified as ozone-depleting compounds and have essentially been banned from use. Solvents that can be used in the same process, or in a replacement process that offers the necessary cleaning qualities, include chlorinated solvents (methylene chloride, perchloroethylene, and trichloroethylene), most manufacturers have converted to some form of water-based process using alkaline, neutral, or acid cleaners or to a process using chlorine-free, hydrocarbon-based solvents. Sealed chamber machines use non-VOC, nonchlorinated solvents that are continuously recycled.

ULTRASONIC CLEANING

When high-quality cleaning is required for small parts, *ultrasonic cleaning* may be preferred. Here the parts are suspended or placed in wire-mesh baskets that are then immersed in a liquid cleaning bath, often a water-based detergent. The bath contains an ultrasonic transducer that operates at a frequency that causes *cavitation* in the liquid. The bubbles that form and implode provide the majority of the cleaning action, and if gross dirt, grease, and oil are removed prior to the immersion, excellent results can usually be obtained in 60 to 200 seconds. Most systems operate at between 10 and 40 kHZ. Because of the ability to use water-based solutions, ultrasonic cleaning has replaced many of the environmentally unfriendly solvent processes.

ACID PICKLING

In the *acid-pickling* process, metal parts are first cleaned to remove oils and other contaminants and then dipped into dilute acid solutions to remove oxides and dirt that are left on the surface by the previous processing operations. The most common solution is a 10% sulfuric acid bath at an elevated temperature between 150° and 185° F. Muriatic acid is also used, either cold or hot. As the temperature increases, the solutions can become more dilute.

After the parts are removed from the pickling bath, they should be rinsed to flush the acid residue from the surface and then dipped in an alkaline bath to prevent rusting. When it will not interfere with further processing, an immersion in a cold *milk of lime* solution is often used. Caution should be used to avoid overpickling, since the acid attack can result in a roughened surface.

■ 35.4 COATINGS

Each of the surface finishing methods previously presented has been a material removal process, designed to clean, smooth, and otherwise reduce the size of the part. Many other techniques have been developed to add material to the surface of a part. If the material is deposited as a liquid or organic gas (*or* from a liquid or gas medium), the process is called *coating*. If the added material is a solid during deposition, the process is known as *cladding*.

PAINTING, WET OR LIQUID

Paints and enamels are by far the most widely used finish on manufactured products, and a great variety are available to meet the wide range of product requirements. Most of today's commercial paints are synthetic organic compounds that contain pigments and dry by polymerization or by a combination of polymerization and adsorption of oxygen. Water is the most common carrying vehicle for the pigments. Heat can be used to accelerate the drying, but many of the synthetic paints and enamels will dry in less than an hour without the use of additional heat. The older oil-based materials have a long drying time and require excessive environmental protection measures. For these reasons they are seldom used in manufacturing applications.

Paints are used for a variety of reasons, usually to provide protection and decoration but also to fill or conceal surface irregularities, change the surface friction, or modify the light or heat absorption or radiation characteristics. Table 35-3 provides a list of some of the more commonly used organic finishes, along with their significant characteristics. *Nitrocellulose lacquers* consist of thermoplastic polymers dissolved in organic solvent. Although fast drying (by the evaporation of the solvent) and capable of producing very beautiful finishes, they are not sufficiently durable for most commercial applications. The *alkyds* are a general-purpose paint but are not adequate for hard-service applications. *Acrylic enamels* are widely used for automotive finishes and may require catalytic or oven curing. *Asphaltic paints*, solutions of asphalt in a solvent, are used extensively in the electrical industry, where resistance to corrosion is required and appearance is not of prime importance.

When considering a painted finish, the temptation is to focus on the outermost coat, to the exclusion of the underlayers. In reality, painting is a complex system that includes the substrate material, cleaning and other pretreatments (such as anodizing, phosphating, and various conversion coatings), priming, and possible intermediate layers. The method of application is another integral feature to be considered.

TABLE 35-3 Commonly Used Organic Finishes and Their Qualities

Material	Durability (Scale of 1–10)	Relative Cost (Scale of 1–10)	Characteristics
Nitrocellulose lacquers	1	2	Fast drying; low durability
Epoxy esters	1	2	Good chemical resistance
Akyd-amine	2	1	Versatile; low adhesion
Acrylic lacquers	4	1.7	Good color retention; low adhesion
Acrylic enamels	4	1.3	Good color retention; though; high baking temperature
Vinyl solutions	4	2	Flexible; good chemical resistance; low solids
Silicones	4–7	5	Good gloss retention; low flexibility
Flouropolymers	10	10	Excellent durability; difficult to apply

PAINT APPLICATION METHODS

In manufacturing, almost all painting is done by one of four methods: *dipping, hand spraying, automatic spraying*, or *electrostatic spray finishing*. In most cases, at least two coats are required. The first (or *prime*) coat serves to (1) ensure adhesion, (2) provide a leveling effect by filling in minor porosity and other surface blemishes, and (3) improve corrosion resistance and thus prevent later coatings from being dislodged in service. These properties are less easily attainable in the more highly pigmented paints that are used in the final coats to promote color and appearance. When using multiple coats, however, it is important that the carrying vehicles for the final coats do not unduly soften the underlayers.

Dipping is a simple and economical means of paint application when all surfaces of the part are to be coated. The products can be manually immersed into a paint bath or passed through the bath while on or attached to a conveyor. Dipping is attractive for applying prime coats and for painting small parts where spray painting would result in a significant waste due to overspray. Conversely, the process is unattractive where only some of the surfaces require painting or where a very thin, uniform coating would be adequate, as on automobile bodies. Other difficulties are associated with the tendency of paint to run, producing both a wavy surface and a final drop of paint attached to the lowest drip point. Good-quality dipping requires that the paint be stirred at all times and be of uniform viscosity.

Spray painting is probably the most widely used paint application process because of its versatility and the economy in the use of paint. In the conventional technique, the paint is atomized and transported by the flow of compressed air. In a variation known as *airless spraying,* mechanical pressure forces the paint through an orifice at pressures between 500 and 4500 psi. This provides sufficient velocity to produce atomization and also propel the particles to the workpiece. Because no air pressure is used for atomization, there is less spray loss (paint efficiency may be as high as 99%) and less generation of gaseous fumes.

Hand spraying is probably the most versatile means of application but can be quite costly in terms of labor and production time. When air or mechanical means provide the atomization, workers must exercise considerable skill to obtain the proper coverage without allowing the paint to "run" or "drape." Only a very thin film can be deposited at one time, usually less than 0.001 in. As a result, several coats may be required with intervening time for drying.

One means of applying thicker layers in a single application is known as *hot spraying*. Special solvents are used that reduce the viscosity of the material when heated. Upon atomization, the faster-evaporating solvents are removed, and the drop in temperature produces a more viscous, run-resistant material that can be deposited in thicker layers.

When producing large quantities of similar or identical parts, some form of automatic system is usually employed. The simplest automatic equipment consists of some form of parts conveyor that transports the parts past a series of stationary spray heads.

While the concept is simple, the results may be unsatisfactory. A large amount of paint is wasted, and it is difficult to get uniform coverage.

Industrial robots can be used to move the spray heads in a manner that mimics the movements of a human painter, maintaining uniform separation distance and minimizing waste. This is an excellent application for the robot, since a monotonous and repetitious process can be performed with consistent results. In addition, use of a robot removes the human from an unpleasant, and possibly unhealthy, environment. Nowdays, cars are painted almost exclusively with robots.

Both manual and automatic spray painting can benefit from the use of *electrostatic deposition*. A DC electrostatic potential is applied between the atomizer and the workpiece. The atomized paint particles assume the same charge as the atomizer and are therefore repelled. The oppositely charged workpiece then attracts the particles, with the actual path of the particle being a combination of the kinetic trajectory and the electrostatic attraction. The higher the DC voltage, the greater the electrostatic attraction. Overspraying can be reduced by as much as 60 to 80%, as can the generation of airborne particles and other emissions. Unfortunately, part edges and holes receive a heavier coating than flat surfaces due to the concentration of electrostatic lines of force on any sharp edge. Recessed areas will receive a reduced amount of paint, and a manual touch-up may be required using conventional spray techniques. Despite these limitations, electrostatic spraying is an extremely attractive means of painting complex-shaped products where the geometry would tend to create large amounts of overspray.

In an electrostatic variation of airless spraying, the paint is fed onto the surface of a rapidly rotating cone or disk that is also one electrode of the electrostatic circuit. Centrifugal force causes the thin film of paint to flow toward the edge, where charged particles are spun off without the need for air assist. The particles are then attracted to the workpiece, which serves as the other electrode of the electrostatic circuit. Because of the effectiveness of the centrifugal force, paints can be used with high-solids content, reducing the amount of volatile emissions and enabling a thicker layer to be deposited in a single application.

Electrocoating or *electrodeposition* applies paint in a manner similar to the electroplating of metals. As shown schematically in Figure 35-12, the paint particles are suspended in an aqueous solution and are given an electrostatic charge by applying a DC voltage between the tank (cathode) and the workpiece (anode). As the electrically conductive workpiece enters and passes through the tank, the paint particles are attracted to it and deposit on the surface, creating a uniform, thin coating that is more than 90% resin and pigment. When the coating reaches a desired thickness, determined by the bath conditions, no more paint is deposited. The workpiece is then removed from the tank, rinsed in a water spray, and baked at a time and temperature that depends on the particular type of paint. Baking of 10 to 20 minutes at 375°F is somewhat typical.

Electrocoating combines the economy of ordinary dip painting with the ability to produce thinner, more uniform coatings. The process is particularly attractive for applying the prime coat to complex structures, such as automobile bodies, where good corrosion resistance is a requirement. Hard-to-reach areas and recesses can be effectively coated.

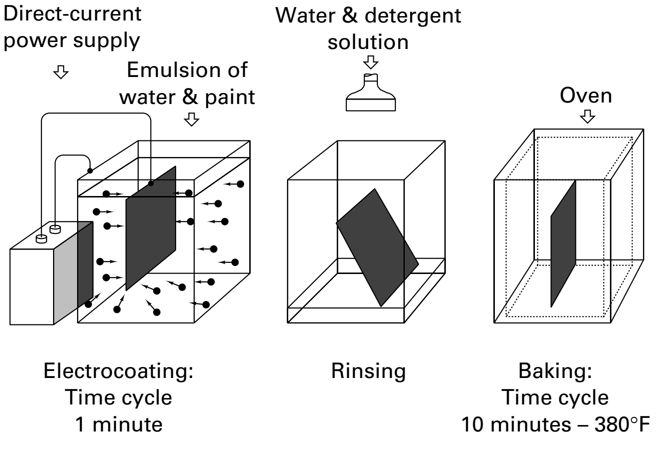

FIGURE 35-12 Basic steps in the electrocoating process.

Since the solvent is water, no fire hazard exists (as with the use of many solvents), and air and water pollution is reduced significantly. In addition, the process can be readily adapted to conveyor line production.

DRYING

Most paints and enamels used in manufacturing require from 2 to 24 hours to dry at normal room temperature. This time can be reduced to between 10 minutes and 1 hour if the temperature can be raised to between 275° and 450°F. As a result, elevated-temperature drying is often preferred. Parts can be batch processed in ovens or continuously passed through heated tunnels or under panels of infrared heat lamps.

Elevated-temperature drying is rarely a problem with metal parts, but other materials can be damaged by exposure to the moderate temperatures. For example, when wood is heated, the gases, moisture, and residual sap are expanded and driven to the surface beneath the hardening paint. Small bubbles tend to form that roughen the surface, or break, producing small holes in the paint.

POWDER COATING

Powder coating is yet another variation of electrostatic spraying, but here the particles are solid rather than liquid. Several coats, such as primer and finish, can be applied and then followed by a single baking, in contrast to the baking after each coat that is required in the conventional spray processes. In addition, the overspray powder can often be collected and reused. While volatilized solvents are no longer a concern, operators must now address the possibility of powder explosion, as well as the health hazards of airborne particles.

Modern powder technology can produce a high-quality finish with superior surface properties and usually at a lower cost than liquid painting. Powder painting is more efficient in the use of materials (the overspray can be captured and reused) and lower energy requirements. The economic advantages must be weighed against the limitations of powder coating. Dry systems have a longer color change time than wet systems. The process is not good for large objects (massive tanks) or heat-sensitive objects. It is not easy to produce film thickness less than 1 mil (0.03 mm).

Table 35-4 provides details on powders that are used in powder coatings. Thermoplastics can also be used, but thermosetting powders are most common. The elements

TABLE 35-4 Thermosetting Powder Coatings (Dry Painting) Have a Wide Variety of Properties and Applications

Properties	Epoxy	Epoxy/Polyester Hybrid	TGIC Polyester	Polyester Urethane	Acrylic Urethane
Application thickness	0.5–20 mils[a]	0.5–10 mils	0.5–10 mils	0.5–10 mils	0.5–10 mils
Cure cycle (metal temperatures)[b]	450°F—3 min 250°F—30 min	450°F—3 min; 325°F—25 min	400°F—7 min; 310°F—20 min	400°F — 7 min; 350°F—17 min	400°F—7 min; 360°F—25 min
Outdoor weatherability	Poor	Poor	Very good	Very good	Excellent
Pencil hardness	HB-5H	HB-2H	HB-2H	HB-3H	H-3H
Direct impact resistance, in lb[c]	80–160	80–160	80–160	80–160	20–60
Chemical resistance	Excellent	Very good Least expensive	Good	Good	Very good Most expensive
Cost (relative)	2	1	3	4	5
Applications	Furniture, cars, ovens, appliances	Water heaters, radiators, office furniture	Architectural aluminum, outdoor furniture, farm equipment	Car wheels/rims, playground equipment	Washing machines, refrigerators, ovens

[a] Thickness up to 150 mils can be applied via multiple coats in a fluidized bed.

[b] Time and temperature can be reduced, by utilizing accelerated curing mechanisms, while maintaining the same general properties.

[c] Tested at a coating thickness of 2.0 mils.

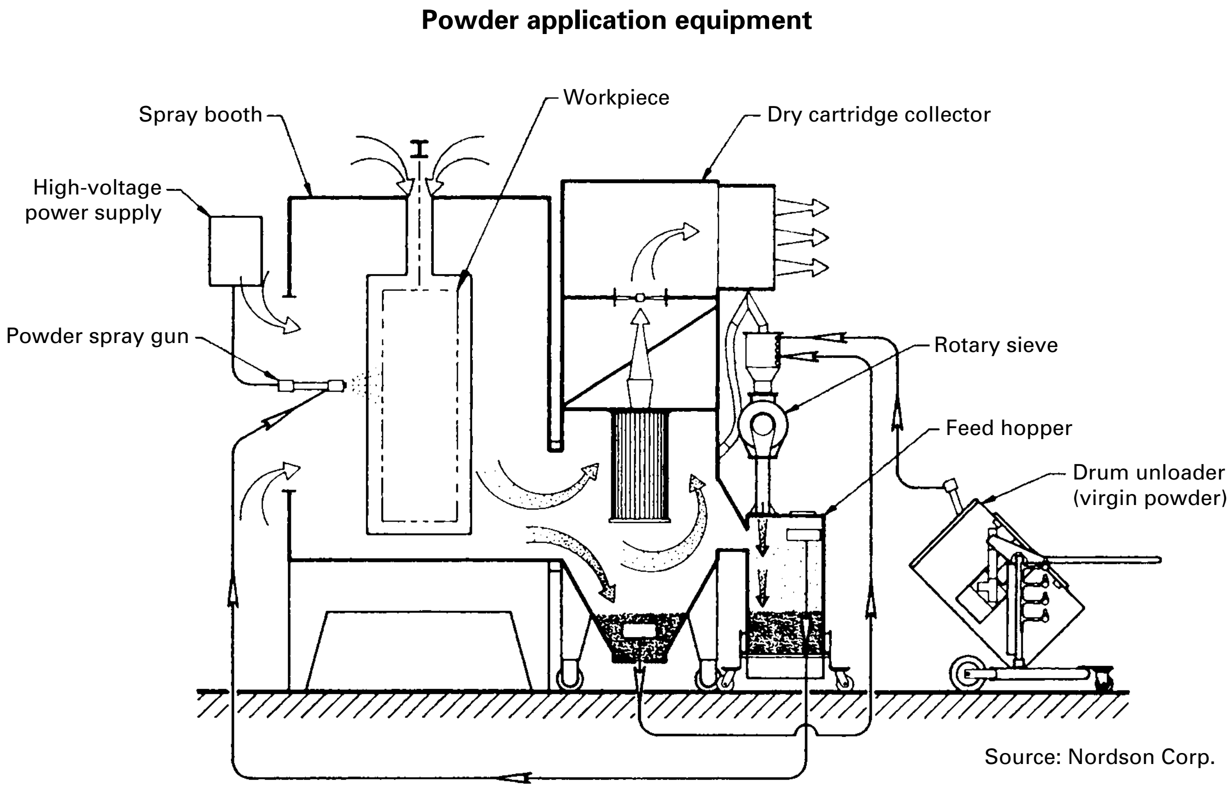

Source: Nordson Corp.

FIGURE 35-13 A schematic of a powder coating system. The wheels on the color modules permit it to be exchanged with a spare module to obtain the next color.

of a powder coating system are shown in Figure 35-13. The following aspects of the process must be considered:

- Types of guns—corona charged or tribo charged
- Number of guns—depends on many factors, such as parts per hour, size of parts, line speed, and powder types
- Color change time/frequency
- Safety
- Curing oven—coated parts put in ovens to melt, flow, and cure the powder

HOT-DIP COATINGS

Large quantities of metal products are given corrosion-resistant coatings by direct immersion into a bath of molten metal. The most common coating materials are zinc, tin, aluminum, and tene (an alloy of lead and tin).

Hot-dip galvanizing is the most widely used method of imparting corrosion resistance to steel. (The zinc acts as a sacrificial anode, protecting the underlying iron.) After the products, or sheets, have been cleaned to remove oil, grease, scale, and rust, they are fluxed by dipping into a solution of zinc ammonium chloride and dried. Next, the article is completely immersed in a bath of molten zinc. The zinc and iron react metallurgically to produce a coating that consists of a series of zinc–iron compounds and a surface layer of nearly pure zinc.

The coating thickness is usually specified in terms of weight per unit area. Values between 0.5 and 3.0 oz/ft^2 are typical, with the specific value depending on the time of immersion and speed of withdrawal. Thinner layers can be produced by incorporating some form of air jet or mechanical wiping as the product is withdrawn. Since the corrosion resistance is provided through the sacrificial action of the zinc, the thin layers do not provide long-lasting protection. Extremely heavy coatings, on the other hand, may tend to crack and peel. The appearance of the coating can be varied through both the process conditions and alloy additions of tin, antimony, lead, and aluminum. When the coatings are properly applied, bending or forming can often follow galvanizing without damage to the integrity of the coating. Zinc-galvanized sheet can be heat treated with a zinc–iron alloy coating. The 10% iron content adds strength and makes for good corrosion and pitting/chipping resistance. In auto applications, galvannealing beats out pure zinc on several counts: spot weldability, pretreatability, and ease of painting. Electrogalvanized zinc–nickel coatings that contain 10 to 15% Ni can be used in thinner layers (5–6 microns) and are easier to form and spot weld.

The primary limitations to hot-dip galvanizing are the size of the product (which is limited to the size of the tank holding the molten zinc) and the "damage" that might occur when a metal is exposed to the temperatures of the molten material (approximately).

Tin coatings can also be applied by immersing in a bath of molten tin with a covering of flux material. Because of the high cost of tin and the relatively thick coatings applied by hot dipping, most tin coatings are now applied by electroplating. *Terne coating* utilizes an alloy of 15 to 20% tin and the remainder lead. This material is cheaper than tin and can provide satisfactory corrosion resistance for many applications.

CHEMICAL CONVERSION COATINGS

In *chemical conversion coating,* the surface of the metal is chemically treated to produce a nonmetallic, nonconductive surface that can impart a range of desirable properties. The most popular types of conversion coatings are chromate and phosphate. Aluminum, magnesium, zinc, and copper (as well as cadmium and silver) can all be treated by a *chromate* conversion process that usually involves immersion in a chemical bath. The surface of the metal is convened into a layer of complex chromium compounds that can impart colors ranging from bright clear through blue, yellow, brown, olive drab, and black. Most of the films are soft and gelatinous when they are formed but harden upon drying. They can be used to (1) impart exceptionally good corrosion resistance; (2) act as an intermediate bonding layer for paint, lacquer, or other organic finishes; or (3) provide specific colors by adding dyes to the coating when it is in its soft condition.

Phosphate coatings are formed by immersing metals (usually steel or zinc) in baths where metal phosphates (iron, zinc, and manganese phosphates are all common) have been dissolved in solutions of phosphoric acid. The resultant coatings can be used to precondition surfaces to receive and retain paint or enhance the subsequent bonding with rubber or plastic. In addition, phosphate coatings are usually rough and can provide an excellent surface for holding oils and lubricants. This feature can be used in manufacturing, where the coating holds the lubricants that assist in forming, or in the finished product, as with black-color bolts and fasteners, whose corrosion resistance is provided by a phosphate layer impregnated with wax or oil.

BLACKENING OR COLORING METALS

Many steel parts are treated to produce a black, iron oxide coating—a lustrous surface that is resistant to rusting when handled. Since this type of oxide forms at elevated temperatures, the parts are usually heated in some form of special environment, such as spent carburizing compound or special blackening salts.

Chemical solutions can also be used to blacken, blue, and even "brown" steels. Brown, black, and blue colors can also be imparted to tin, zinc, cadmium, and aluminum through chemical bath immersions or wipes. The surfaces of copper and brass can be made to be black, blue, green, or brown, with a full range of tints in between.

ELECTROPLATING

Large quantities of metal *and plastic* parts are electroplated to produce a metal coating that imparts corrosion or wear resistance, improves appearance (through color or luster), or increases the overall dimensions. Virtually all commercial metals can be plated, including aluminum, copper, brass, steel, and zinc-based die castings. Plastics can be electroplated, provided that they are first coated with an electrically conductive material.

The most common platings are zinc, chromium, nickel, copper, tin, gold, platinum, and silver. The electrogalvanized zinc platings are thinner than the hot-dip coatings and can be produced without subjecting the base metal to the elevated temperatures of

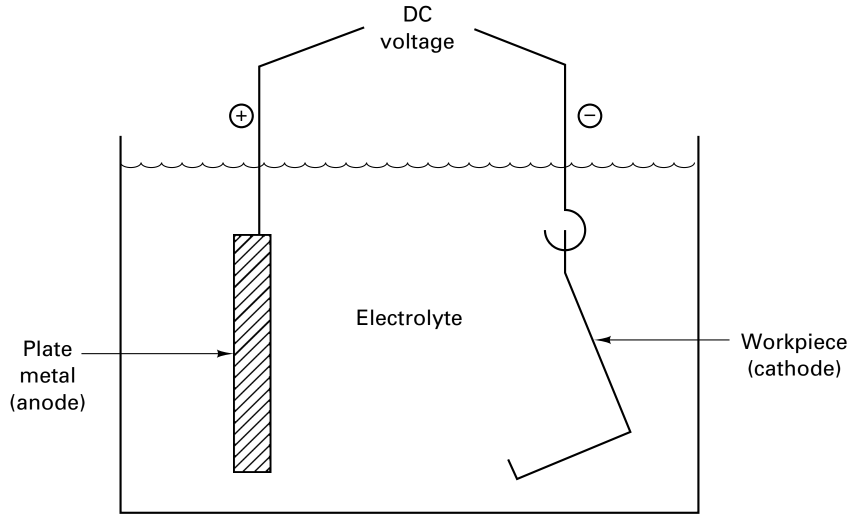

FIGURE 35-14 Basic circuit for an electroplating operation, showing the anode, cathode (workpiece), and electrolyte (conductive solution).

molten zinc. Nickel plating provides good corrosion resistance but is rather expensive and does not retain its lustrous appearance. Consequently, when lustrous appearance is desired, a chromium plate is usually specified. Chromium is seldom used alone, however. An initial layer of copper produces a leveling effect and makes it possible to reduce the thickness of the nickel layer that typically follows to less than 0.0006 in. The final layer of chromium then provides the attractive appearance. Gold, silver, and platinum platings are used in both the jewelry and electronics industries, where the thin layers impart the desired properties while conserving the precious metals.

Hard chromium plate, with Rockwell hardnesses between 66 and 70, can be used to build up worn parts to larger dimensions and to coat tools and other products that need reduced surface friction and good resistance to both wear and corrosion. Hard chrome coatings are always applied directly to the base material and are usually much thicker than the decorative treatments, typically ranging from .003 to .010 in. thick. Even thicker layers are used in applications such as diesel cylinder liners. Since hard chrome plate does not have a leveling effect, defects or roughness in the base surface will be amplified. If smooth surfaces are desired, subsequent grinding and polishing may be necessary.

Figure 35-14 depicts the typical electroplating process. A DC voltage is applied between the parts to be plated (which is made the cathode) and an anode material that is either the metal to be plated or an inert electrode. Both of these components are immersed in a conductive electrolyte, which may also contain dissolved salts of the metal to be plated as well as additions to increase or control conductivity. In response to the applied voltage, metal ions migrate to the cathode, lose their charge, and deposit on the surface. While the process is simple in its basic concept, the production of a high-quality plating requires selection and control of a number of variables, including the electrolyte and the concentrations of the various dissolved components, the temperature of the bath, and the electrical voltage and current. The interrelation of these features adds to the complexity and makes process control an extremely challenging problem.

The surfaces to be plated must also be prepared properly if satisfactory results are to he obtained. Pinholes, scratches, and other surface defects must be removed if a smooth, lustrous finish is desired. Combinations of degreasing, cleaning, and pickling are used to ensure a chemically clean surface, one to which the plating material can adhere.

As shown in Figure 35-15, the plated metal tends to be preferentially attracted to corners and protrusions. This makes it particularly difficult to apply a uniform plating to irregular shapes, especially ones containing recesses, corners, and edges. Design features can be incorporated to promote plating uniformity, and improved results can often be obtained through the use of multiple spaced anodes or anodes whose shape resembles that of the workpiece.

Electroplating is frequently performed as a continuous process, where the individual parts to be plated are hung from conveyors. As they pass through the process, they

Convex surfaces: Plate uniformly especially if edges are rounded

Concave recesses: Platability depends on dimensions

Flat surfaces: Not desirable. Use slight crown to hide undulations.

Slots: Narrow slots and holes should have rounded corners.

Blind holes: Must be exempted from minimum thickness requirements. Require vent hole at blind end.

V-shaped grooves: Difficult to plate. Should be avoided.

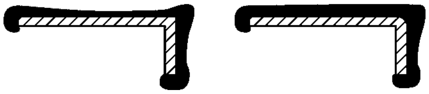

Sharply angled edges: Plating is thinner in center areas. Round all areas.

Fins: Increase plating time and costs. Reduce durability of finish.

FIGURE 35-15 Design recommendations for electroplating operations.

are lowered into successive plating, washing, and fixing tanks. Ordinarily, only one type of workpiece is plated at a time, because the details of solutions, immersion times, and current densities are usually changed with changes in workpiece size and shape.

In the *electroforming* process, the coating becomes the final product. Metal is electroplated onto a mandrel (or mold) to a desired thickness and is then stripped free to produce small quantities of molds or other intricate-shaped sheet-metal type products.

ANODIZING

Anodizing is an electrochemical process, that is somewhat the reverse of electroplating, which produces a conversion-type coating on aluminum that can improve corrosion and wear resistance and impart a variety of decorative effects. If the workpiece is made the anode of an electrolytic cell, instead of a plating layer being deposited on the surface, a reaction progresses inward, increasing the thickness of the hard hexagonal aluminum oxide crystals on the surface. The hardness depends on thickness, density, and porosity of the coating, which are controlled by the cycle time and applied currents along with the chemistry, concentration, and temperature of the electrolyte. The surface texture very nearly duplicates the prefinishing texture, so a buffing prefinish produces a smooth, lustrous coating while sand blasting produces a grainy or satiny coating.

The flow diagram in Figure 35-16 shows the anodizing process. Coating thicknesses range from 0.1 mils to 0.25 mils. Note that the product dimensions will increase, however, because the aluminum oxide coating occupies about twice the volume of the metal from which it formed.

The nature of the developed coating is controlled by the electrolyte. If the oxide coating is not soluble in the anodizing solution, it will grow until the resistance of the oxide prevents current from flowing. The resultant coating, which is thin, nonporous, and nonconducting, is used in a variety of electrical applications.

If the oxide coating is slightly soluble in the anodizing solution, dissolution competes with oxide growth and a porous coating will be produced, where the pores provide for continued current flow to the metal surface. As the coating thickens, the growth rate decreases until it achieves steady state, where the growth rate is equal to the rate of dissolution. This condition is determined by the specific conditions of the process, including voltage, current density, electrolyte concentration, and electrolyte temperature. Sulfuric, chromic, oxalic, and phosphoric acids all produce electrolytes that dissolve oxide, with a sulfuric acid solution being the most common.

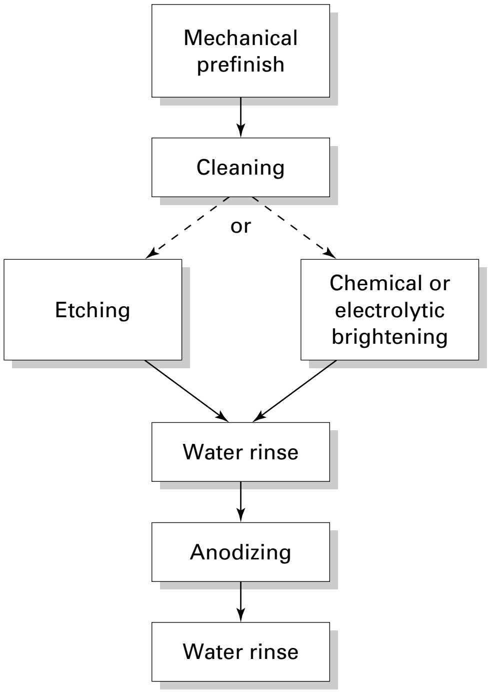

FIGURE 35-16 The anodizing process has many steps.

In a process variation known as *color anodizing,* a sulfuric acid bath is used to produce a layer of microscopically porous oxide that is transparent on pure aluminum and somewhat opaque on alloys. When this material is immersed in a dye solution, capillary action pulls the dye into the pores. The dye is then trapped in place by a sealing operation, usually performed simply by immersing the anodized metal in a bath of hot water. The aluminum oxide coating is converted to a monohydrate, with accompanying increase in volume. The pores close and become resistant to further staining or the leaching out of the dye.

While most people are familiar with the variety of colors in aluminum athletic goods, such as softball hats, the actual applications range from giftware, through automotive trim, to architectural use. Aluminum can be made to look like gold, copper, or brass, or it can take on a variety of colors with a combined metallic luster that cannot be duplicated by other methods.

If PTFE (Teflon) is introduced into the pores, coatings can be produced that couple high hardness and low friction. The porous oxide layer can also be used to enhance the adhesion of an additional layer of material, such as paint, or carry lubricant during a subsequent forming operation. Since the coating is integral to the part, subsequent operations can often be performed without destroying its integrity or reducing its protective qualities.

Anodizing can also be performed on other metals, such as magnesium, and the process is similar to the passivation of stainless steel.

ELECTROLESS PLATING

When using electroplating, it is almost impossible to obtain a uniform plating thickness on even moderately complex shapes, the platings cannot be applied to nonconductors, and a large amount of energy is required. For these reasons, a substantial effort has been directed toward the development of plating techniques that do not require an external source of electricity. These methods are known as *electroless*, or *autocatalytic, plating*. Considerable success has been achieved with nickel, but copper and cobalt, as well as some of the precious metals, can also be deposited.

In the electroless process, complex plating solutions (containing metal salts, reducing agents, complexing agents, pH adjusters, and stabilizers) are brought into contact with a substrate surface that acts as a catalyst or has been pretreated with catalytic material. The metallic ion in the plating solution is reduced to metal and deposits on the surface. Since the deposition is purely a chemical process, the coatings are uniform in thickness, independent of part geometry. Unfortunately, the rate of deposition is considerably slower than with electroplating.

Probably the most popular of the electroless coatings is electroless nickel, and various methods exist for its deposition using both acid and alkaline solutions. The coatings offer good corrosion resistance, as well as hardnesses between Rockwell C 49 and 55. In addition, the hardness can be increased further to as high as Rockwell C 80 by subsequent heat treatment.

ELECTROLESS COMPOSITE PLATING

A very useful adaptation of the electroless process has been developed wherein minute particles are co-deposited along with the electroless metal to produce composite-material coatings. Finely divided solid particles, with diameters between 1 and 10 in., are added to the plating bath and deposit up to 50 vol% with the matrix. While it may appear that a large variety of materials could be co-deposited, commercial applications have largely been limited to diamond, silicon carbide, aluminum oxide, and Teflon (PTFE).

Figure 35-17 shows a deposit of silicon carbide particles in a nickel-alloy matrix, where the particles constitute about 25% by volume. The coating offers the same corrosion resistance as nickel, but the high hardness of the silicon carbide particles (about 4500 on the Vickers scale, where tungsten carbide is 1300 and hardened steel is about 900) contributes outstanding resistance to wear and abrasion. Since the deposition is electroless, the thickness of the coating is not affected by the shape of the part. Applications include the coating of plastic-molding dies, for use where the polymer resin contains significant amounts of abrasive filler.

MECHANICAL PLATING

Mechanical plating, also known as peen plating or impact plating, is an adaptation of barrel finishing in which coatings are produced by cold-welding soft, malleable metal powder onto the substrate. Numerous small products are first cleaned and may be

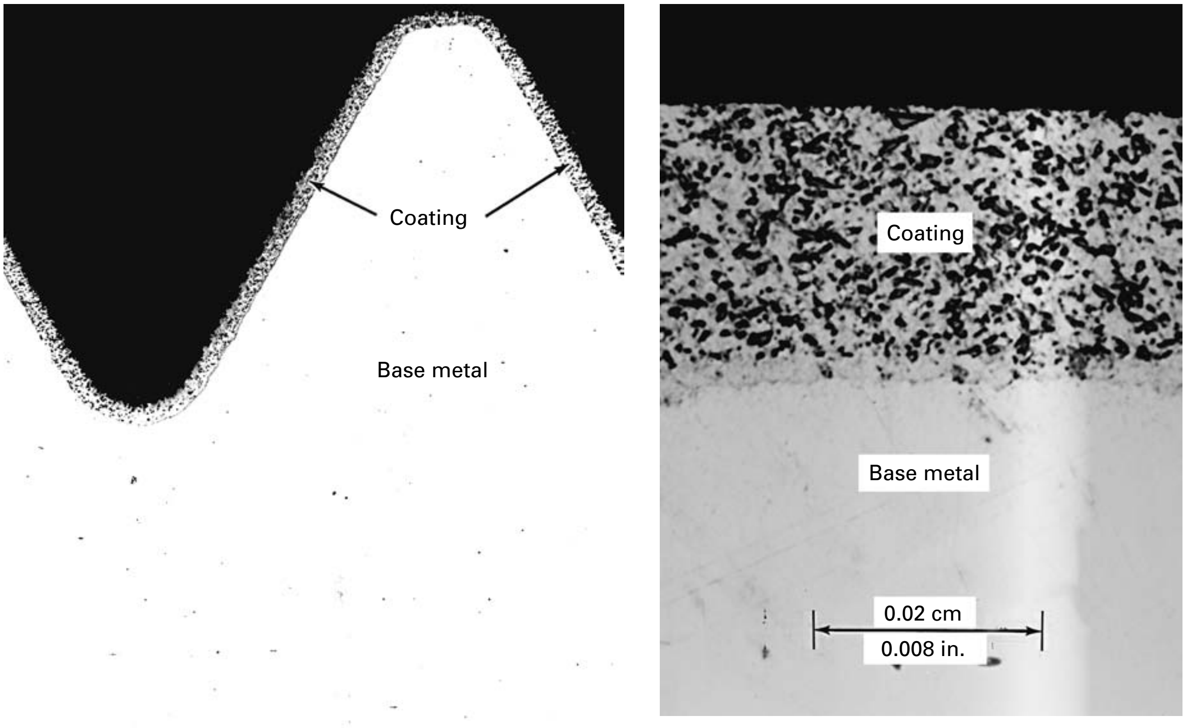

FIGURE 35-17 (Left) Photomicrograph of nickel carbide plating produced by electroless deposition. Notice the uniform thickness coating on the irregularly shaped product. (Right) High-magnification cross section through the coating. *(Courtesy of Electro-Coatings Inc.)*

given a thin galvanic coating of either copper or tin. They are then placed in a tumbling barrel, along with a water slurry of the metal powder to be plated, glass or ceramic tumbling media, and chemical promoters or accelerators. The media particles peen the metal powder onto the surface, producing uniform-thickness deposits (possibly a bit thinner on edges and thicker in recesses—the opposite of electroplating!). Any metal that can be made into fine powder can be deposited, but the best results are obtained for soft materials, such as cadmium, tin, and zinc. Since the material is deposited mechanically, the coatings can be layered or involve mixtures with bulk chemistries that would be chemically impossible due to solubility limits. The fact that the coatings are deposited at room temperature, and in an environment that does not induce hydrogen embrittlement, makes mechanical plating an attractive means of coating hardened steels.

PORCELAIN ENAMELING

Metals can also be coated with a variety of glassy, inorganic materials that impart resistance to corrosion and abrasion, decorative color, electrical insulation, or the ability to function in high-temperature environments. Multiple coats may be used, with the first or ground coat being selected to provide adhesion to the substrate and the cover coat to provide the surface characteristics. The material is usually applied in the form of a multicomponent suspension or slurry (by dipping or spraying), which is then dried and fired. An alternative dry process uses electrostatic spraying of powder and subsequent firing. During the firing operation, which may require temperatures in the range of 800° to 8000°F, the coating materials melt, flow, and resolidify. Porcelain enamel is often found on the inner, perforated tubs of many washing machines and may be used to impart the decorative exterior on cookpots and frying pans.

■ 35.5 VAPORIZED METAL COATINGS

Vapor deposition processes can be classified into two main categories: *physical vapor deposition* (PVD) and *chemical vapor deposition* (CVD). While sometimes used as though it were a specific process, the term *PVD* applies to a group of processes in which the material to be deposited is carried physically to the surface of the workpiece. Vacuum metallizing and sputtering are key PVD processes, as are complex variations, such as ion plating. All are carried out in some form of vacuum, and most are line-of-sight processes in which the target surfaces must be positioned relative to the source. In contrast, the CVD processes deposit material through chemical reactions and generally require significantly higher temperatures. Tool steels treated by CVD may have to be heat treated again, while most PVD processes can be conducted below normal tempering temperatures. See Chapter 21 for additional discussions on PVD and CVD processes.

■ 35.6 CLAD MATERIALS

Clad materials are actually a form of composite in which the components are joined as solids, using techniques such as roll bonding, explosive welding, and extrusion. The most common form is a laminate, where the surface layer provides properties such as corrosion resistance, wear resistance, electrical conductivity, thermal conductivity, or improved appearance, while the substrate layer provides strength or reduces overall cost. Alclad aluminum is a typical example. Here surface layers of weaker but more corrosion-resistant single-phase aluminum alloys are applied to a base of high-strength but less corrosion-resistant, age-hardenable material. Aluminum-clad steel meets the same objective but with a heavier substrate, and stainless steel can be used to clad steels, reducing the need for nickel- and chromium-alloy additions throughout.

Wires and rods can also be made as *claddings.* Here the surface layer often imparts conductivity, while the core provides strength or rigidity. Copper-clad steel rods that can be driven into the ground to provide electrical grounding for lightning rod systems are one example.

■ 35.7 TEXTURED SURFACES

While technically not the result of a surface finishing process or operation, *textured surfaces* can be used to impart a number of desirable properties or characteristics. The types of textures that are often rolled onto the sheets used for refrigerator panels serve to conceal dirt, smudges, and fingerprints. Embossed or coined protrusions can enhance the grip of metal stair treads and walkways. Corrugations provide enhanced strength and rigidity. Still other textures can be used to modify the optical or acoustical characteristics of a material.

■ 35.8 COIL-COATED SHEETS

Traditionally, sheet metal components, such as panels for appliance cabinets, have been fabricated from bare-metal sheets. Pans are blanked and shaped by the traditional metalforming operations, and the shaped panels are then finished on an individual basis. This requires individual handling and the painting or plating of geometries that contain holes, bends, and contours. In addition, there is the time required to harden, dry, or cure the applied surface finish.

An alternative approach is to apply the finish to the sheet material after rolling but before coiling. *Coatings* can be applied continuously to one or both sides of the material while it is in the form of a flat sheet. Thus the coiled material is effectively prefinished, and efforts need to be taken to protect the surface during the blanking and forming operations used to produce the final shape. Various paints have been applied successfully, as well as a full spectrum of metal coatings and platings. The sheared edges will not be coated, but if this feature can be tolerated, the additional measures to protect the surface may be an attractive alternative to the finishing of individual components. A second sequence that has some advantages takes the coils of steel that have been cut to length and stamps the holes and notches into them to create blanks. The blanks are pretreated, dried, powder coated, cured, and restacked. Then they are postformed to shape them into the back, side, and front panels of appliance cabinets.

The manufacturers call this *blank coating*. The coating thickness is about 1.5 mils ± 0.2 mil versus 2 mils ± 0.5 mil (less powder, better quality), and rusting at the corners of the holes is eliminated.

■ 35.9 EDGE FINISHING AND BURRS

Burrs are the small, sometimes flexible projections of material that adhere to the edges of workpieces that are formed by cutting, punching, or grinding, like the exit-side burrs formed in the milled slot of Figure 35-18. Dimensionally, they are typically only 0.003 in. thick and 0.001 to 0.005 in. in height, but if not removed, they can lead to assembly failures, short circuits, injuries to workers, or even fatigue failures.

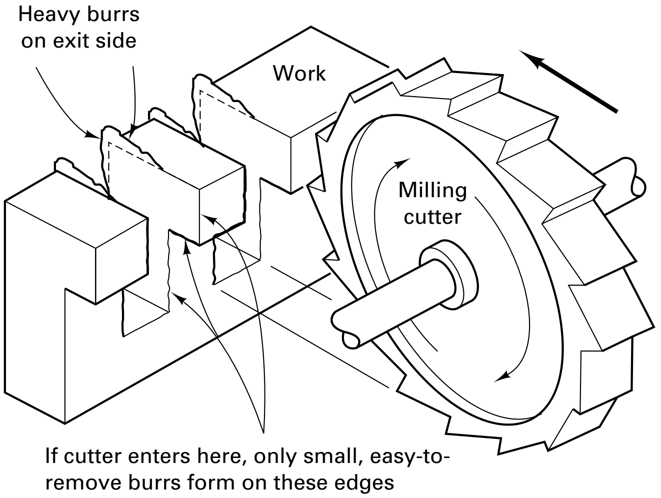

FIGURE 35-18 Schematic showing the formation of heavy burrs on the exit side of a milled slot. *(From L. X. Gillespie,* American Machinist, *November 1985.)*

The most basic way to detect a burr is to run your finger or fingernail over the edges of the part. Probes and visual inspection techniques (microscopes) are used to find burrs as well.

A number of different processes have been used for *burr removal,* including some discussed previously in this chapter and others presented as special types of machining. These include grinding, chamfering, barrel tumbling, vibratory finishing, centrifugal and spindle finishing, abrasive jet machining, water jet cutting, wire brushing, belt sanding, chemical machining, electropolishing, buffing, electrochemical machining, filing, ultrasonic machining, and abrasive flow machining (see Chapter 26).

Other burr removal methods may be quite specialized, such as thermal-energy deburring. Here the parts are loaded into a chamber, which is then filled with a combustible gas mixture. When the gas is ignited, the short-duration wavefront heats the small burrs to as much as 6000°F, while the remainder of the workpiece rarely exceeds 300°F. The burrs are vaporized in less than 20 ms, including those in inaccessible or difficult-to-

TABLE 35-5 Recommended Allowances for Deburring Processes[a]

Process	Edge Radius, mm (in.)	Stock Loss, mm (in.)	Surface Finish, μmAA (μin.AA[b])
Barrel tumbling	0.08–0.5 (0.003–0.020)	0.0025 (0–0.001)	1.5–0.5 (60–20)
Vibratory deburring	0.08–0.5 (0.003–0.020)	0–0.025 (0–0.001)	1.8–0.9 (70–35)
Centrifugal barrel tumbling	0.08–0.5 (0.003–0.020)	0–0.025 (0–0.001)	1.8–0.5 (70–20)
Spindle finishing	0.08–0.5 (0.003–0.020)	0–0.025 (0–0.001)	1.8–0.5 (70–20)
Abrasive-jet deburring	0.08–0.25 (0.003–0.010)	0–0.05 (0–0.002)[c]	0.8–1.3 (30–50)
Water-jet deburring	0–0.13 (0–0.005)(p)	0(p)	
Liquid hone deburring	0–0.13 (0–0.005)	0–0.013 (0–0.0005)	
Abrasive-flow deburring	0.025–0.5 (0.001–0.020)	0.025–0.13 (0.001–0.005)[d]	1.8–0.5 (70–20)
Chemical deburring	0–0.5 (0–0.002)	0–0.025 (0–0.001)	1.3–0.5 (50–20)
Ultrasonic deburring	0–0.05 (0–0.002)	0–0.025 (0–0.001)	0.5–0.4 (20–15)
Electrochemical deburring	0.05–0.25 (0.002–0.010)	0.025–0.08 (0.001–0.003)[e]	
Electropolish deburring	0–0.25 (0–0.010)	0.025–0.08 (0.001–0.003)[e]	0.8–0.4 (30–15)
Thermal-energy deburring	0.05–0.5 (0.002–0.020)	0	1.5–1.3(p) (60–50)
Power brushing	0.08–0.5 (0.003–0.020)	0–0.013 (0–0.0005)	
Power sanding	0.08–0.8 (0.003–0.030)[f]	0.013–0.08 (0.0005–0.003)	1.0–08 (40–30)
Mechanical deburring	0.08–1.5 (0.003–0.060)		
Manual deburring	0.05–0.4 (0.002–0.015)[g]		

[a] Based on a burr 0.08 mm (0.003 in.) thick and 0.13 mm (0.005 in.) high in steel. Thinner burrs can generally be removed much more rapidly. Values shown are typical. Stock-loss values are for overall thickness or diameter. Location A implies that loss occurs over external surfaces, B that loss occurs over all surfaces, and C that loss occurs only near edge. (p) indicates best estimate.

[b] Values shown indicate typical before and after measurements in a deburring cycle.

[c] Abrasive is assumed to contact all surfaces.

[d] Stock loss occurs only at surfaces over which medium flows.

[e] Some additional stray etching occurs on some surfaces.

[f] Flat sanding produces a small burr and no radius.

[g] Chamfer is generally produced with a small burr.

Source: L. X. Gillespie, *American Machinist,* November 1985.

reach locations. Since the process does not use abrasive media, there is no change to any of the product dimensions. The product surfaces are rarely affected by the generated heat, and the cycle (including loading and unloading) can be repeated as many as 100 times an hour. Unfortunately, there is a thin recast layer and heat-affected zone that forms where the burrs were removed. This region is usually less than 0.001 in. thick but may be objectionable in hardened steels and highly stressed parts.

Of all of the burr removal methods, tumbling and vibratory finishing are usually the most economical, typically costing in the neighborhood of a few cents per part. Since most of the common methods also remove metal from exposed surfaces and produce a radius on all edges, it is important that the parts be designed for deburring. Table 35-5 provides a listing of the various deburring processes, as well as the edge radius, stock loss, and surface finish that would result from removal of a "typical burr" of 0.003 in. thickness.

DESIGN TO FACILITATE OR ELIMINATE BURR REMOVAL

By knowing how and where burrs are likely to *form*, the engineer may be able to design parts to make the burrs easy to remove or even eliminate them. As shown in Figure 35-19, extra recesses or grooves can eliminate the need for deburring, since the burr produced by a cutoff tool or slot milling cutter will now lie below the surface. In this approach, one must determine whether it is cheaper to perform another machining operation (*undercutting* or grooving) or to remove the resulting burr.

Chamfers on sharp corners can also eliminate the need to deburr. The chamfering tool removes the large burrs formed by facing, turning, or boring and produces a relief for mating parts. The small burr formed during chamfering may be allowable or can easily be removed. Often, it may be preferable to give the manufacturer the freedom to use either a chamfer (produced by machining) or an edge radius (formed during the deburring operation) on all exposed corners or edges.

35.10 SURFACE INTEGRITY

Surface integrity has become the subject of intense interest because the traditional, nontraditional, and posttreatment methods used to manufacture hardware can change the material's properties. Although the consequence of these changes becomes a design problem, the preservation of properties is a manufacturing consideration. Designs that require a high degree of surface integrity are the ones that display the following qualities:

- Are highly stressed
- Employ low safety factors
- Operate in severe environments
- Must have prime reliability
- Have a high surface areas–to–volume ratio
- Are made with alloys that are sensitive to processing

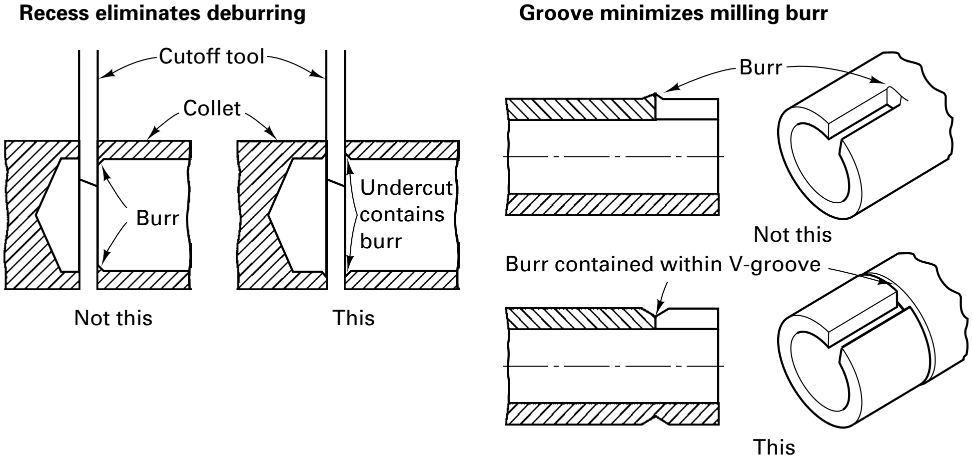

Recess eliminates deburring

Groove minimizes milling burr

FIGURE 35-19 Designing extra recesses and grooves into a part may eliminate the need to deburr. *(From L.X. Gillespie,* American Machinist, *November 1985.)*

Surface integrity should be a joint concern of manufacturing and engineering. Manufacturing must balance cost and producibility with design requirements. It bears repeating to say that engineering must design components with knowledge of manufacturing processes. A reduction in fatigue life resulting from processing can be reversed with a posttreatment. This is another example of design for manufacturing.

It is important to understand that the various manufacturing and surface-finishing processes each impart distinct properties to the materials that will influence the performance of the product. The achievement of satisfactory product performance obviously depends on a good design, high-quality manufacturing (including surface treatment), and proper assembly. The failure of parts in service, however, is usually the result of a combination of factors. A brief survey of features associated with surfaces and surface processing follows.

Each of the various machining processes produces characteristic surface textures (roughness, waviness, and lay) on the workpieces. In addition, the various processes tend to produce changes in the chemical, physical, mechanical, and metallurgical properties on or near the surfaces that are created. For the most part, these changes are limited to a depth of 0.005 to 0.050 in. below the surface. The effects can be beneficial or detrimental, depending on the process, material, and function of the product.

Machining processes (both chip forming and chipless) induce plastic deformation into the surface layer, as shown in Figure 35-20. The cut surfaces are generally left with tensile residual stresses, microcracks, and a hardness that is different from the bulk material. Processes such as EDM and laser machining leave a layer of hard, recast metal on the surface that usually contains microcracks. Ground surfaces can have either residual tension or residual compression, depending on the mix between chip formation and plowing or rubbing during the grinding operation. If sufficient heat is generated, phase transformations can occur in the surface and subsurface regions.

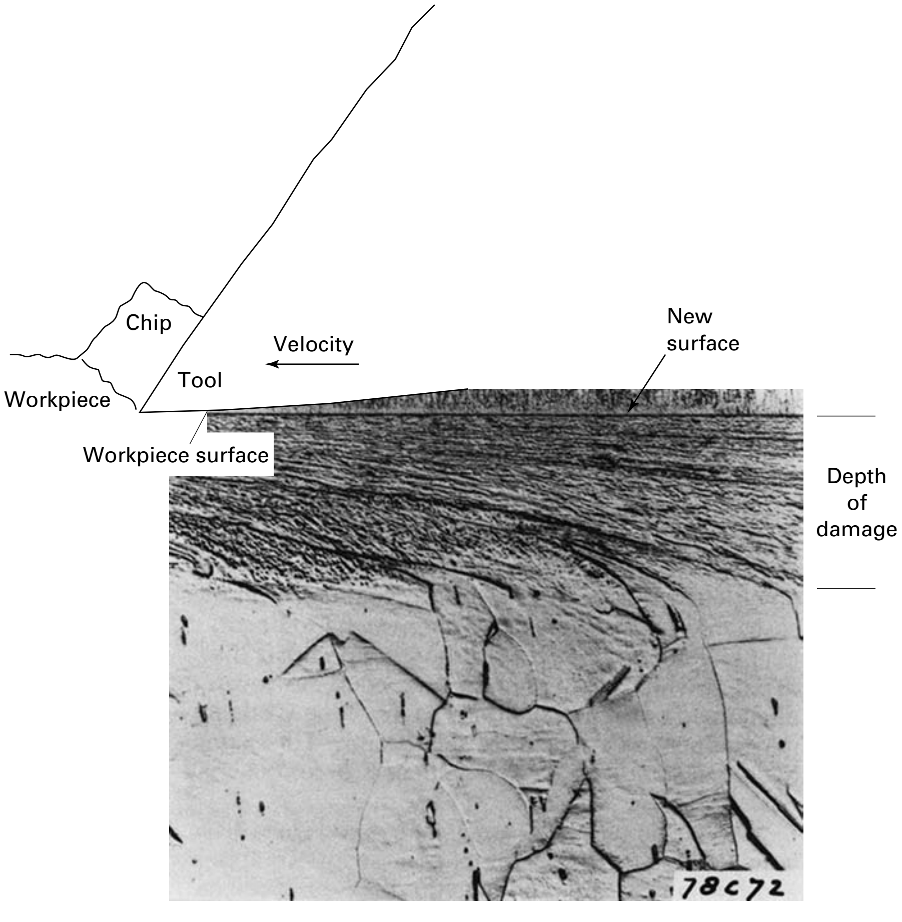

FIGURE 35-20 Plastic deformation in the surface layer after cutting. *(B. W. Kruszynski and C. W. Cuttervelt,* Advanced Manufacturing Engineering, *Vol. 1, 1989.)*

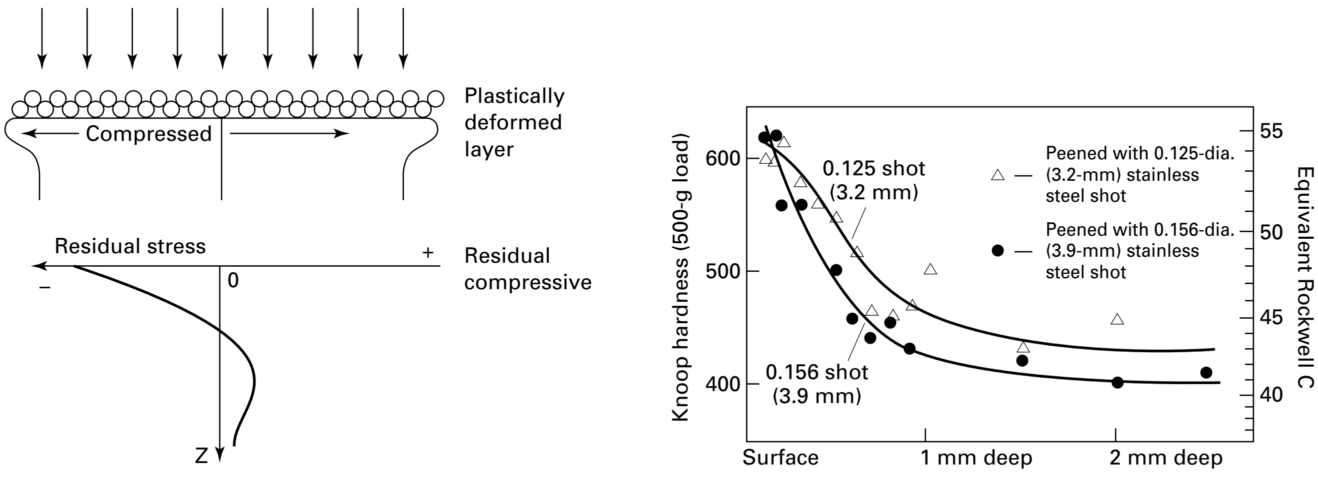

(a) (b)

FIGURE 35-21 (a) Mechanism for formation of residual compressive stresses in surface by cold plastic deformation (shot peening). (b) Hardness increased in surface due to shot peening.

Processes such as *roller burnishing* (described in Chapter 18) produce a smooth surface with compressive residual stresses. Shot peening (and tumbling) can increase the hardness in the surface and introduce a residual compressive stress, as shown in Figure 35-21a and 35-21b. Welding processes produce tensile residual stresses as the deposited material shrinks upon cooling. Similar shrinkage occurs in castings, but the resulting stresses may be complex due to the variation of shrinkage or the lack of restraint. Tensile stresses on the surface can often be offset by a subsequent exposure to shot peening or tumbling.

In summary, the surface and subsurface regions of a material can be significantly altered due to (1) plastic strain or plastic deformation, (2) high temperatures, (3) differential expansions or contractions due to temperature changes or variations, and (4) chemical reactions.

To illustrate the complex nature of surface effects, consider Figure 35-22, which shows the depth of "surface damage" due to machining as a function of the rake angle of the tool. To increase the cutting speed (and thereby increase the rate of production), an engineer might change from a high-speed tool steel cutter with a large rake angle (such as 30°) to a carbide tool with a zero rake. While the resulting surface finish may be similar, the depth of "surface damage" is doubled. Failures may occur in service, whereas previous parts had performed quite admirably.

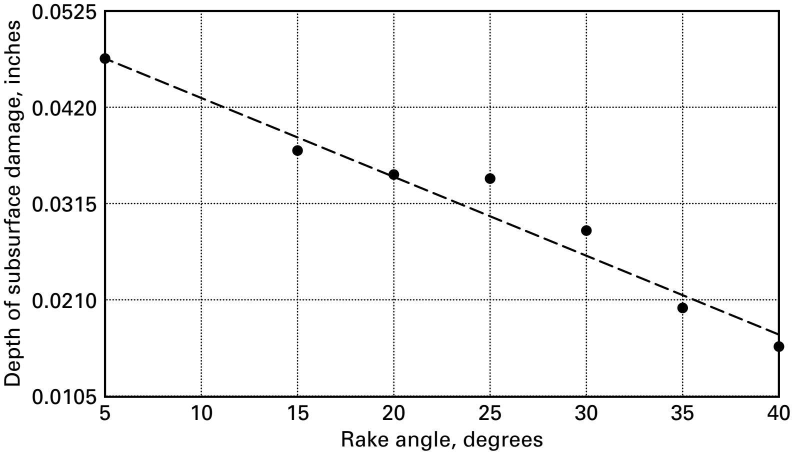

FIGURE 35-22 The depth of damage to the surface of a machined part increases with decreasing rake angle of the cutting tool.

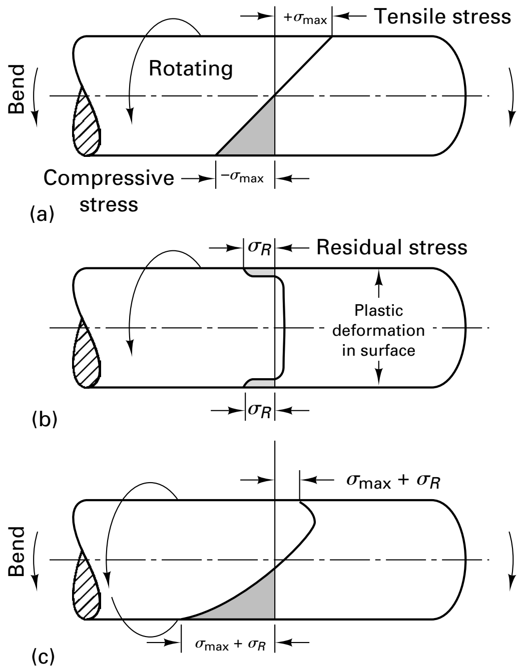

Rotating beam with bending results in cycles of tension and compression

Beam given roller burnish or shot peen to cold work surface and develop a residual compressive stress

Beam in service with reduced peak tensile stresses due to additive nature of applied and residual stresses

FIGURE 35-23 *(Top)* A cantilever-loaded (bent) rotating beam, showing the normal distribution of surface stresses (i.e., tension at the top and compression at the bottom). *(Center)* The residual stresses induced by roller burnishing or shot peening. *(Bottom)* Net stress pattern obtained when loading a surface-treated beam. The reduced magnitude of the tensile stresses contributes to increased fatigue life.

INFLUENCE OF SURFACE FINISH ON FATIGUE

Fatigue failure occurs as the result of repeated loading at some point typically below the yield strength of the material. Fatigue failures have been shown to almost always nucleate on or near the surface of a component. Fine surface cracks begin at discontinuities (such as microcracks, grooves, ridges, cavities, machining marks, imbedded particles, etc.) at the surface, and the cracks propagate with repeated cyclic loads.

Tensile residual stresses in the altered surface layer have an additive effect on the applied stresses in the component. This means that tensile residual stresses in the material add to external stresses to the component, reducing its fatigue strength. Alternatively, as shown in Figure 35-23, compressive residual stresses subtract from tensile external stresses, and since tensile stresses are those ultimately responsible for fatigue failure, the fatigue strength of the material is increased.

Figure 35-23 shows how residual stresses couple with applied stresses to affect product performance. Suppose that a round beam has a load applied to it so that it is bent while rotating. At the top of the rotation, the surface is in tension, and at the bottom, it is in compression. The result is a condition of cyclic fatigue and the likelihood of a service life limited by fatigue failure. If the part is roller burnished or shot peened, the compressive residual stress pattern of the middle figure is added to the applied stresses, producing the net pattern shown at the bottom. The net effect is a lowering of the peak tensile stress experienced by the surface and a related extension in fatigue life. The specific results will depend on the details of the process. For *shot peening*, the key variables include shot size, shot velocity, exposure time, distance between the nozzle and the surface, and the angle of impact.

Figure 35-24 presents the results of a study in which specimens were prepared by milling and turning and then either polished, shot peened, or roller burnished. If an applied stress between 41,000 and 42,000 psi is experienced in a fatigue application, the difference in fatigue life between a milled specimen and one that has been milled and roller burnished is 610,000 cycles (90,000 cycles as opposed to 700,000 cycles). In essence, roller burnishing serves to induce a sevenfold extension to the fatigue life of the product. Similar results have been observed in the resistance to stress–corrosion cracking.

As the data above show, both the designer and the manufacturer need to be aware of the effects that manufacturing processes can have on the performance of a product. Maintaining the proper sequence of operations may be as important to the surface properties as the selection of the processes and control of the operating parameters.

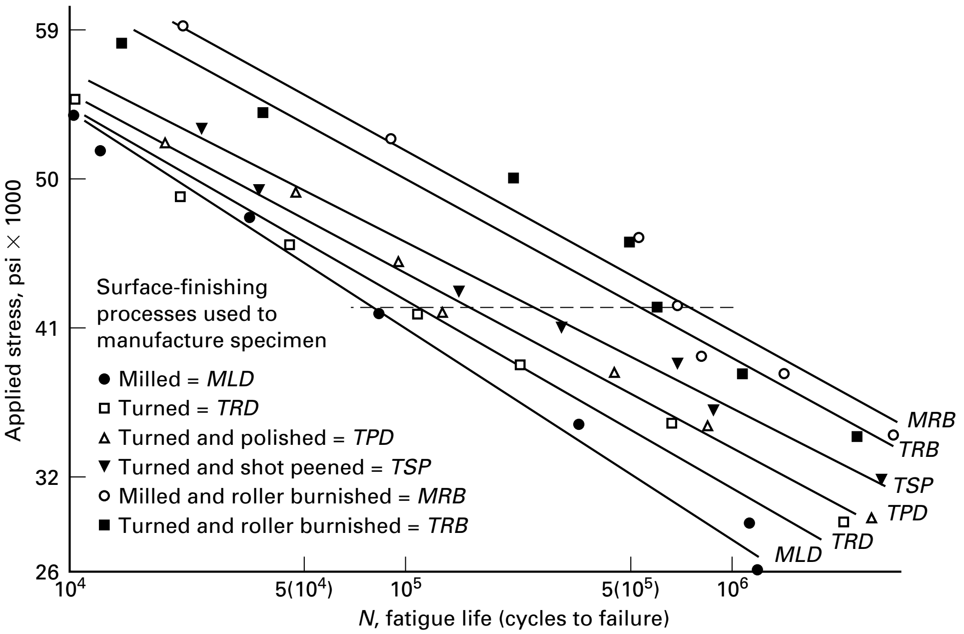

FIGURE 35-24 Fatigue life of rotating beam 2024-T4 aluminum specimens with a variety of surface-finishing operations. Note the enhanced performance that can be achieved by shot peening and roller burnishing.

Key Words

abrasive cleaning
acid pickling
alkaline cleaning
anodizing
barrel burnishing
barrel finishing
belt sanding
buffing
burr removal
case hardening
centrifugal barrel tumbling
chemical conversion coating
chemical cleaning
chemical vapor deposition
chromate
cladding
coating
coil-coated sheets
color anodizing
dipping
electrocoating
electroforming
electroless composite plating
electroless plating
electroplating
electropolishing
electrostatic deposition
finishing compounds
hard chromium plate
hot-dip coating
mechanical cleaning
mechanical plating
media
paint
phosphate
porcelain enameling
powder coating
prime coat
residual stresses
roller burnishing
roughness
sand blasting
shot peening
solvent cleaning
spray painting
surface integrity
surface roughness
textured surfaces
tumbling
ultrasonic cleaning
vacuum metallizing
vapor degreasing
vibratory finishing
waviness
wire brushing

Review Questions

1. What are some possible objectives of surface engineering processes?
2. What are some of the factors that should be considered when selecting a surface-modification process?
3. How are the surface and its integrity altered by the process of metalcutting?
4. Two surfaces can have the same microinch roughness but be different in appearance. Explain!
5. What limits the resolution of a stylus-type surface-measuring device in finding profiles?
6. What is the general relationship between surface roughness and tolerance? Between tolerance and cost to produce the surface and/or tolerance?
7. What are some of the sources of foreign material on the surface of manufactured products?
8. What are some the common abrasive media used in blasting or abrasive cleaning operations?
9. What types of quantities and part sizes are most attractive for barrel finishing operations?
10. Describe why there might be an optimum fill level in barrel finishing. How might you find the optimum rotational speed?
11. Describe the primary differences between barrel finishing and vibratory finishing.
12. What are some of the possible functions of the compounds that are used in abrasive finishing operations?
13. How is electropolishing different from electroplating?
14. What are some of the mechanisms of alkaline cleaning, and what types of soils can be removed?
15. What types of surface contaminants cannot be removed by solvent cleaning?
16. In view of its many attractive features, why has vapor degreasing become an unattractive process?
17. What is the primary type of surface contaminant removed by acid pickling?

18. What is the difference between coating and cladding operations?
19. What are some of the reasons that paints may be specified for manufactured items?
20. What are some of the functions of a prime coat in a painting operation? What features are desired in the final coat?
21. What produces atomization and propulsion in airless spraying?
22. What features make industrial robots attractive for spray painting?
23. What are some of the attractive features of electrostatic spraying?
24. Why would it be difficult to apply electrostatic spray painting to products made from wood or plastic?
25. What are some of the metal coatings that can be applied by the hot-dip process?
26. What are the two most common types of chemical conversion coatings?
27. How can nonconductive materials such as plastic be coated by electroplating?
28. What are the attractive properties of hard chrome plate?
29. What are some of the common process variables in an electroplating cell?
30. Why is it difficult to mix parts of differing size and shape in an automated electroplating system?
31. How is electroforming different from electroplating?
32. When anodizing aluminum, what features determine the thickness of the resulting oxide when the oxide is not soluble in the electrolyte? When it is partially soluble?
33. What produces the various colors in the color anodizing process?
34. What are some of the attractive features of electroless plating?
35. What types of particulate composites can be deposited by electroless plating?
36. What is mechanical plating?
37. What are some of the attractive properties of a porcelain enamel coating?
38. How are burrs made by the milling process? See Figure 35-18.
39. What deburring processes are available that were not described in this chapter?
40. Do all machining processes leave a residual stress?
41. Why would the depth of damage (i.e., plastic deformation) increase with negative rake angle cutting tools?
42. What types of surface features or surface modifications result from machining-type processes?
43. Why might processes that produce residual compressive stresses on product surfaces be attractive for mechanically loaded products?

■ Problems

1. Fishermen are among the most superstitious people in the world, and their superstitions affect the type of equipment that they use. As a result, hook manufacturers generally offer their products in a wide range of colors and finishes. Your company manufactures a range of hooks from AISI 1080 carbon steel wire, forming them to precision shape (eye, bends, barbs, and point) and then heat treating them by a quench-and-temper treatment.

   Consider the size and shape of the product and the various properties that are required. The hooks must be strong enough to resist bending, but not so brittle that they might break. They must be corrosion-resistant to both fresh and salt water, and the desired appearance must be provided without fouling the point or the barbs. If the surface is applied before heat treatment, it must endure that process and maintain its appearance. If it is applied afterward, it cannot weaken or embrittle the hook.

   a. Of the various surface-modification processes, which ones might be attractive for such an application? (*Note:* Make sure that the process is appropriate! For example, barrel plating would probably produce a hopelessly snarled mass of wires!)
   b. For each of the possible processes, describe the advantages, limitations, possible colors or finishes, and relative cost.

2. Select one or more of the following products (as directed) and recommend a surface treatment or coating. Consider the appropriateness of the technique to the size, shape, quantity, and material. Cite the specific features that make the recommended treatment the most attractive. What, if any, are the primary limitations or production concerns?

   a. The exterior housing for the motor and drive unit of a chain saw that has been made as a magnesium-alloy die casting.
   b. Large quantities of steel bolts that are intended for use in outdoor construction. They have been fabricated from 4140 steel, have a shank diameter of $^1/_2$ in., and have been quenched and tempered to a final hardness of Rockwell C 45.
   c. The handle of a household utility knife (retractable-blade cutter) has been made as a two-part zinc die casting.
   d. The scoop portion of an inexpensive ice cream scoop that has been made as a zinc die casting.
   e. A decorative handle for a kitchen cabinet that is made as a zinc die casting.
   f. The exterior of an office filing cabinet that has been made from low-carbon steel sheet.
   g. A high-quality combination wrench (open-end and box-end) that has been forged from 4147 steel bar stock.
   h. The case of a moderately priced wristwatch that has been fabricated from yellow brass (to have a gold appearance).
   i. Tubular frame of a lightweight bicycle that has been made from age-hardened aluminum.
   j. The basket section of a grocery-store shopping cart that has been fabricated from welded steel mesh.
   k. The exterior of an automobile muffler to be fabricated from steel sheet. Describe how the coating treatment might best be integrated into the fabrication sequence.
   l. An inexpensive interior door knob that has been fabricated from deep-drawn cartridge brass sheet.
   m. High-quality steel sockets for a socket-wrench set. These have been forged from AISI 4145 bar stock and subsequently heat treated by a quench-and-temper process.
   n. Refrigerator door panels that have been fabricated from textured AISI 1010 steel sheet.
   o. The interior and exterior surfaces of a 1000-gallon water storage tank that is fabricated by welding 5000 series

aluminum plates. The water will be held at room temperature and is intended for human consumption.

p. A standard office paper clip.
q. A flashlight case that has been fabricated from deep-drawn yellow brass sheet.
r. High-speed drill bits that have been fabricated from Ml tool steel.
s. Injection-molded ABS plastic wheel covers for cars that are intended to look like chrome-plated metal.
t. Inexpensive household scissors that have been cast from gray cast iron.
u. The blade of a high-quality screwdriver that has been forged from AISI 1053 steel and quenched and tempered to Rockwell C 55.
v. The exterior of high-quality, thick-walled cast aluminum cookware.
w. A bathroom sink basin made from deep-drawn 1008 steel sheet.
x. The body section of a child's toy wagon that has been deep-drawn from 1008 steel sheet.

www.wiley.com/college/degarmo

Chapter 35 CASE STUDY

Dana Lynn's Fatigue Lesson

Dana Lynn has just come from her INSY 3000 lab in the manufacturing processes course.

The purpose of this lab was to introduce her to metal fatigue and its basic principles. Metal fatigue arises from the cyclic loading below the yield strength. It can be greatly influenced by the surface finish applied to the metal. Dr. Payton, her instructor, said fatigue most likely accounts for 90% of all mechanical failures, so it is important for an engineer to understand how materials respond to fatigue conditions.

The procedure of this lab was for each student to finish the aluminum specimen with the emery paper, then load the specimen into the fatigue machine (see Figure CS.35A). Students were required to record the number of cycles that was needed to fracture the specimen. It was important that the student wipe the specimen clean and inspect the specimen for burrs, ridges, or flats before inserting it into the drive spindle. The presence of stress raisers can decrease the cumulative number of cycles needed to start a fatigue crack and cause it to fail, hence reducing the fatigue life and static strength of the metal. Small surface cracks, surface flows, or machining marks are examples of stress raisers. Therefore, it is important that one strive to eliminate stress raiser or surface flaws in the specimen that will be exposed to cyclic loadings. The experimental factors for this experiment were the surface finish (grit size of energy paper), applied stress level, and the direction of the surface finish (parallel or perpendicular to the specimen axis). Dr. Payton explained that repeated applications of stress can cause metals to fracture, even if all of the stresses are less than the yield tensile strength and less than the ultimate strength of the material. Surface conditions can heavily influence fatigue life because most fatigue cracks start at the surface of a metal. The fatigue data in Table CS 35A is to be analyzed using statistical experimental design techniques and summarized in the ANOVA table. Factor A was the applied load (50 and 55 lbs), factor B was the treatment (fine and coarse emery paper), and factor C was the surface finish direction (horizontal and vertical). The experiment was replicated so a total of 16 tests were run by the class ($2 \times 2 \times 2 \times 2$). The specimen was tapered so that the stress acting along the test section (shaded) is constant. To make the specimen, you have to calculate θ and the diameter d (see Figure CS.35B).

Here are some of the questions that Dana Lynn had to answer.

1. Analyze the fatigue data collected by the class using statistical experiment (factorial experiment) design techniques. Include all calculations and summarize your results in an analysis of variance (ANOVA) table.
2. What are the effects of stress level, surface finish (grit size in our experiment) and surface finish direction. Are there any interactions between them on fatigue life? Discuss.
3. What effect would abrupt surface changes, such as tool marks or surface flaws, have on fatigue life?
4. The cylindrical specimen is designed such that the applied stress acting along the test section is constant. Why?
5. What is the endurance limit for a metal? Why is the endurance limit an important criteria in many design applications? Does aluminum have an EL?

Continued on next page

TABLE CS.35A Data from 16 Fatigue Tests

	Horizontal		Vertical	
	FINE	COARSE	FINE	COARSE
50 lb-in.	167000	126700	102200	88600
	145600	116800	78600	92600
55 lb-in.	89600	61300	56500	49400
	98800	59800	63200	41200

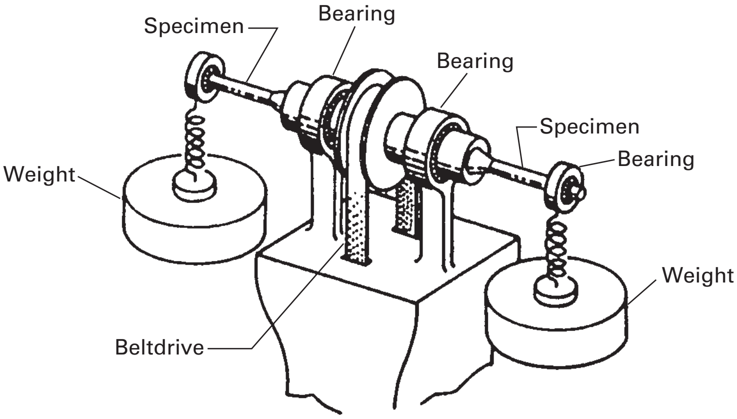

Figure CS 35A Rotary beam fatigue testing machine, used for cylindrical specimens.

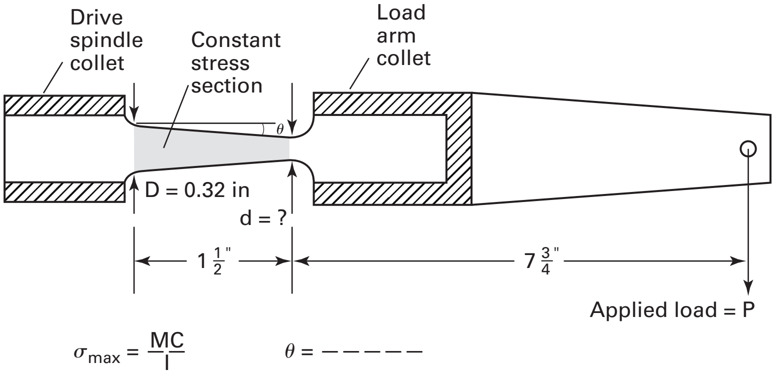

Figure CS 35B Cylindrical specimen with constant stress section. Determine the angle θ and the diameter d.

CHAPTER 36

QUALITY ENGINEERING

36.1 INTRODUCTION

All manufacturing processes display some level of variation. No two items coming from the process will be exactly the same. The primary objective of quality engineering is the systematic reduction of variability, as shown schematically in Figure 36-1. Variability is measured by sigma, σ, the standard deviation, which decreases with the reduction in variability. Early on, acceptance sampling techniques were used to screen incoming goods. This was followed by statistical process control (SPC) efforts, which gave way to companywide quality control (CWQC) and Total Quality Control (TQC) programs. Variation can be further reduced by the application of statistical techniques, like multiple variable analysis, designed experiments, and Taguchi methods, techniques that are a routine part of six sigma efforts many companies are implementing. The drive toward zero defects has been led by Toyota, which achieved exceptional levels of quality by redesigning the manufacturing system so that each step in the making of the car and all

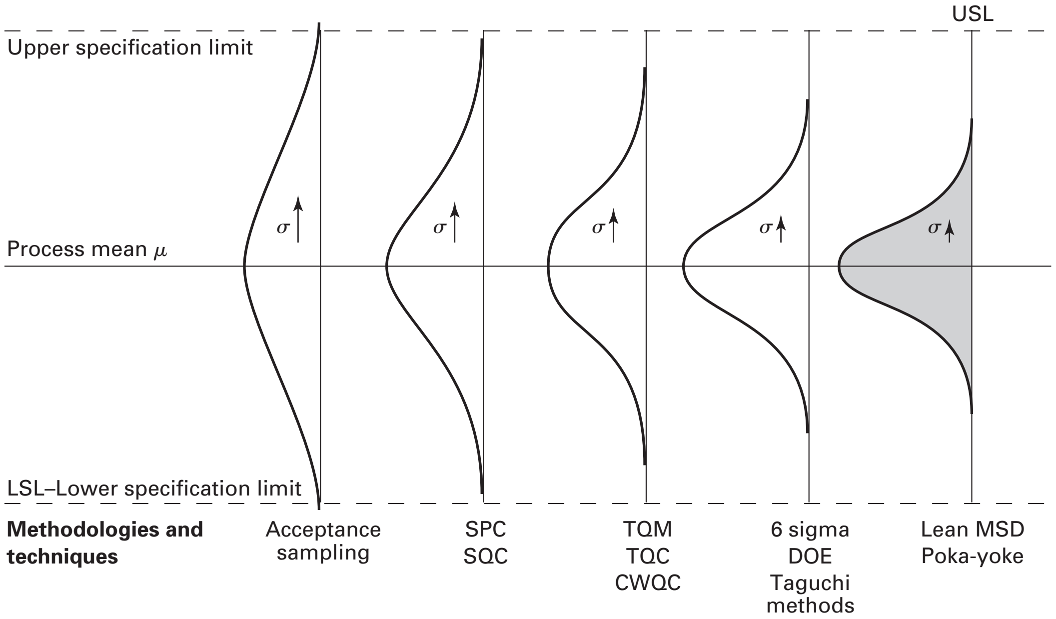

FIGURE 36-1 Over many years, many techniques have been used to reduce the variability in products and processes.

its components is checked before the part moves to the next step or stage in its manufacturing sequence. This system redesign is called lean manufacturing.

In a manufacturing process, the variation may be due to "chance causes" that produce random variations—these causes are said to be inherent and represent a stable source of variation. In addition, there are "assignable causes" of variation that can be detected and eliminated to help improve the process. For example, suppose that we view shooting at a metal target as a "process" for putting holes in a piece of metal. I hand you the gun and tell you to take nine shots at the bull's-eye. Figure 36-2 shows some possible results. You are the operator of the process. To measure the *process capability* (PC)—that is, your ability to consistently hit the bull's-eye you are aiming at—the target is inspected after you have finished shooting. So the capability of manufacturing processes is determined by measuring the output of the process. In *quality control* (QC), the product is examined to determine whether or not the processing accomplished was what was specified by the designer in the design, usually the nominal size and the tolerance. Of course, there are many other aspects of quality that quality engineers must address, such as performance, reliability, durability, aesthetics, and more. In this chapter, we will concentrate on the quality of conformance, meaning how well the product conforms to the specifications. And within that area, we will concentrate on PC studies that are directed at the machine tools used in the processing rather than the quality of the output or products from the processes. Going back to our example, a PC study would quantify the inherent accuracy and precision in the shooting process. Accuracy is reflected in your aim (the average of all your shots), whereas precision reflects the repeatability of the process. The objective is to root out problems that can cause defective products during production. Traditionally, the objective has been to find defects in the process. The more progressive point of view is to design the process to prevent the problems that can cause defective products from occurring during production.

36.2 DETERMINING PROCESS CAPABILITY

The *nature of the process* refers to both the *variability* (or inherent uniformity) and the *accuracy* or the *aim* of the process. Thus in the target-shooting example, a perfect process would be capable of placing nine shots right in the middle of the bull's-eye, one right on

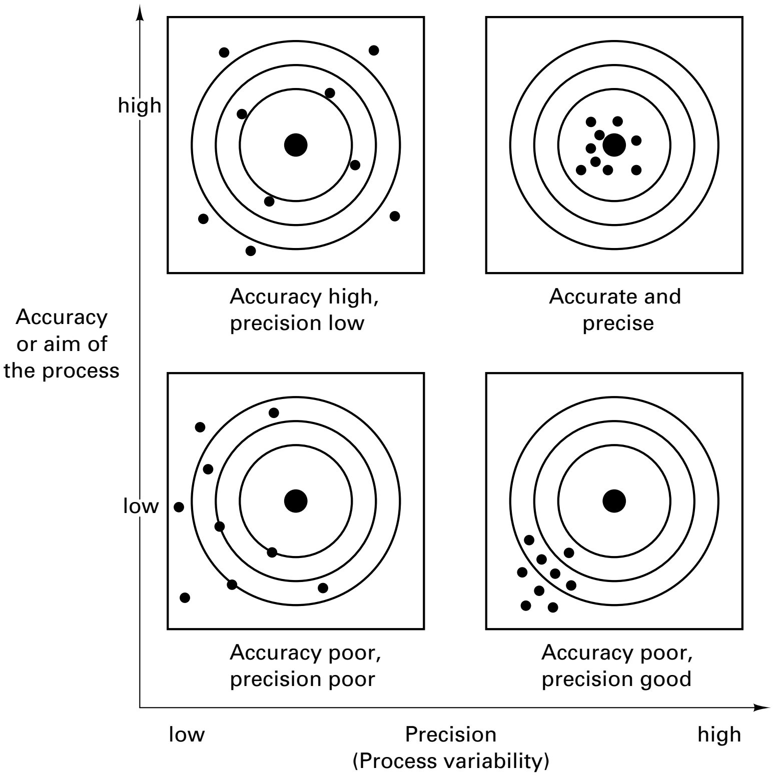

FIGURE 36-2 The concepts of accuracy (aim) and precision (repeatability) are shown in the four target outcomes. Accuracy refers to the ability of the process to hit the true value (nominal) on the average, while precision is a measure of the inherent variability of the process.

top of the other. The process would display no variability with perfect *accuracy*. Such performance would be very unusual in a real industrial process. The variability may have assignable causes and may be correctable if the cause can be found and eliminated. That variability to which no cause can be assigned and which cannot be eliminated is said to be inherent in the process and is therefore its nature.

Some examples of assignable causes of variation in processes include multiple machines for the same components, operator blunders, defective materials, or progressive wear in the tools during machining. Sources of inherent variability in the process include variation in material properties, operator variability, vibrations and chatter, and the wear of the sliding components in the machine, perhaps resulting in poorer operation of the machine. These kinds of variations, which occur naturally in processes, usually display a random nature and often cannot be eliminated. In quality control terms, these are referred to as *chance causes*. Sometimes the causes of assignable variation cannot be eliminated because of cost. Almost every process has multiple causes of variability occurring simultaneously, so it is extremely difficult to separate the effects of the different sources of variability during the analysis.

MAKING PC STUDIES BY THE TRADITIONAL METHODS

The object of the PC study is to determine the inherent nature of the process as compared to the desired specifications. The output of the process must be examined under normal conditions, or what is typically called *hands-off conditions*. The inputs (e.g., materials, setups, cycle times, temperature, pressure, and operator) are fixed or standardized. The process is allowed to run without tinkering or adjusting, while the output (i.e., the product or units or components) is documented with respect to (1) time, (2) source, and (3) order of production. A sufficient number of data have to be taken to ensure confidence in the statistical analysis of the data. The capability of the gage (its precision) used to measure the products must exceed the expected tolerance on the part by one order of magnitude. (See the discussion of the rule of 10 in Chapter 10.)

Prior to any data collection, these steps must be taken:

1. Design the PC experiment (standard method). Use normal or hands-off process conditions; specify machine settings for speed, feed, volume, pressure, material, temperature, operator, and so on.
2. Define the inspection method and the inspection means (the procedure and the instrumentation). In selecting the gage, consider these aspects:
   - **a.** Features that the gage will be checking
   - **b.** Speed or rate of operation
   - **c.** Level of accuracy and precision
   - **d.** Skill of the operator
   - **e.** Portability of gages or part, or both
   - **f.** Environment (clean and stable, cutting fluids)
   - **g.** Workpiece (clean, lubricants present)
   - **h.** Cost (initial, maintenance, daily)
3. Decide how many items (measurements) will be needed to perform the statistical analysis.
4. For a standard PC study, use homogeneous input material, and try to contrast it with normal (more variable) input material.
5. Data sheets must be designed to record date, time, source, order of production, and all the process parameters being used (or measured) while the data are being gathered.
6. Assuming that the standard PC study approach is being used, the process is run, and the parts are made and measured.

Now follow the steps outlined in Figure 36-3. Assume that the designer specified the part to be 1.000 ± 0.005 in. After manufacturing engineering has developed a process plan, some units are manufactured according to the process plan without any adjustment of the process. Each unit is measured, and the data are recorded on the data sheet.

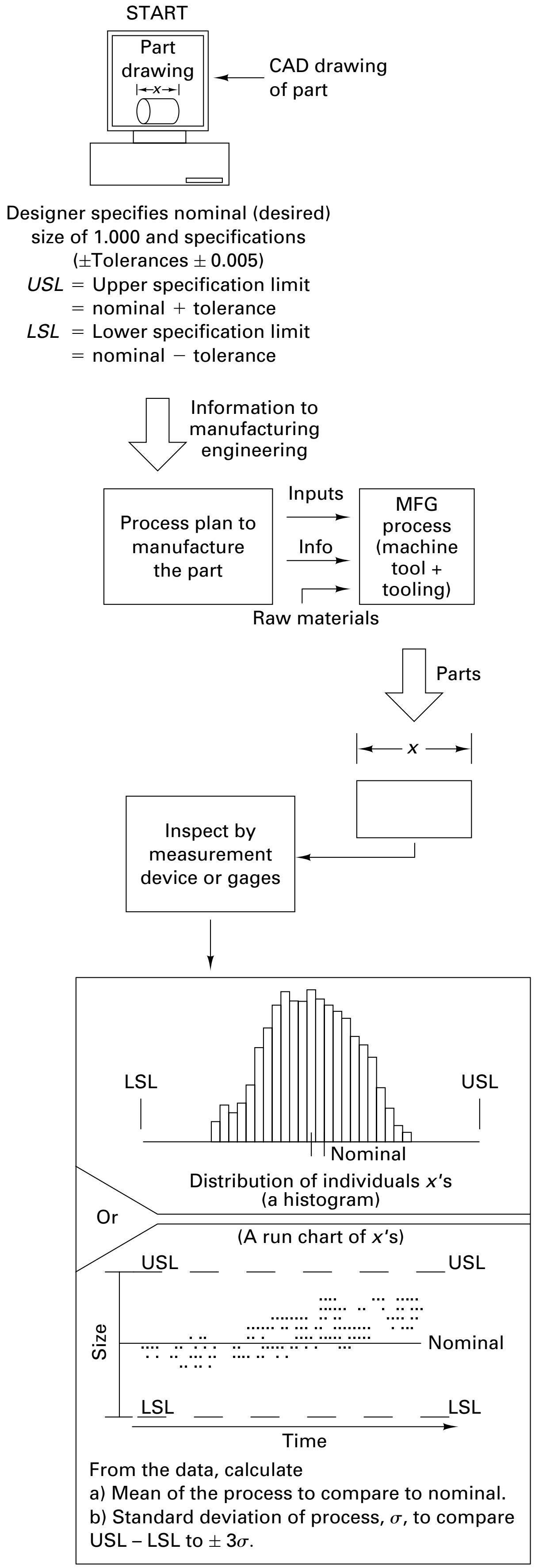

FIGURE 36-3 The process capability study compares the part as made by the manufacturing process to the specifications called for by the designer. Measurements from the parts are collected for run charts and for histograms for analysis—see Figure 36-4.

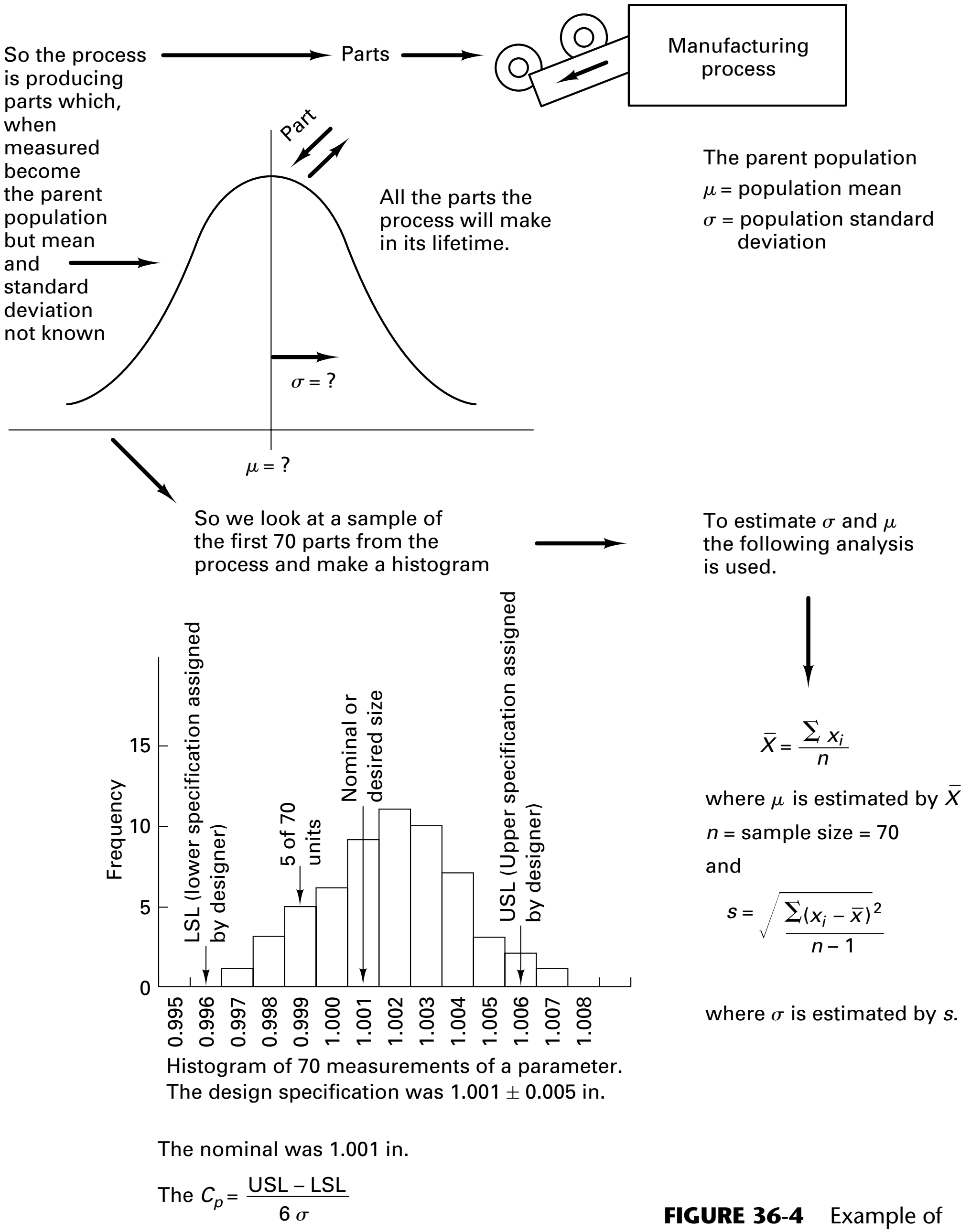

FIGURE 36-4 Example of calculations to obtain estimates of the mean (μ) and standard deviation (σ) of a process.

A frequency distribution, in the form of a *histogram*, or a *run chart* is developed. This histogram shows the raw data and the desired value, along with the upper and lower *specification limits*, where LSL represents lower specification limit and USL the upper specification limit. The statistical data are used to estimate the mean and the standard deviation of this distribution. The run chart shows the same data, but here the data are plotted against time.

The mechanics of this statistical analysis are outlined in Figure 36-4. The true mean of the distribution, designated μ, is to be compared with the nominal value specified by the designer. The estimate of the true *standard deviation*, designated σ (sigma), is used to determine how the process compares with the desired tolerance. *The purpose of the analysis is to obtain estimates of* μ *and* σ *values, the true process parameters, because they are not known.*

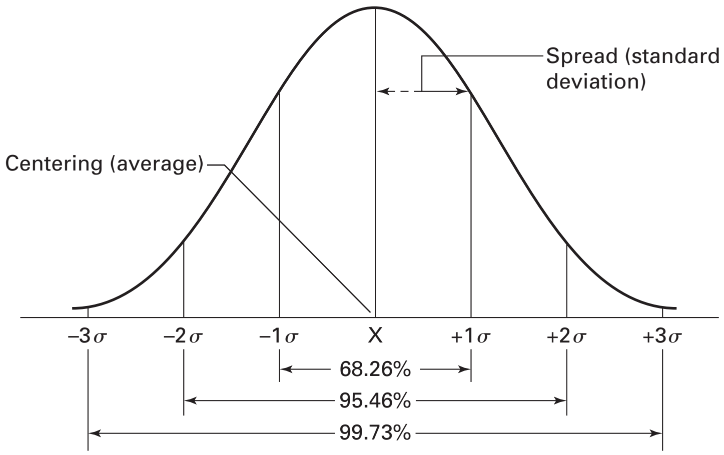

FIGURE 36-5 The normal or bell-shaped curve with the areas within ± 1σ, ± 2σ, and ± 3σ for a normal distribution; 68.26% of the observations will fall within ±1σ from the mean, and 99.73% will fall within ± 3σ from the mean.

The process capability is defined by ± 3σ or 6σ. Thus $\mu \pm 3\sigma$ defines the natural capability limits of the process, assuming the process is approximately normally distributed. Note that a distinction is made between a sample and a population. A sample is of a specified, limited size and is drawn from the population. The population is the large source of items, which can include all the items the process will ever produce under the specified conditions. Our calculations assume that this distribution was normal or bell-shaped. Figure 36-5 shows a typical normal curve and the areas under the curve as defined by the standard deviation. Other distributions, shown in Figure 36-6, are possible, but the histogram clearly suggested that this process can best be described by a normal probability distribution. Now it remains for the process engineer and the operator to combine their knowledge of the process with the results from the analysis in order to draw conclusions about the ability of this process to meet specifications.

HISTOGRAMS

A histogram is a representation of a frequency distribution that uses rectangles whose widths represent class intervals and whose heights are proportional to the corresponding frequencies. The frequency histogram is a type of diagram in which data are grouped into cells (or intervals), and the frequency of observations falling into each interval can be noted. All the observations within a cell are considered to have the same value, which is the midpoint of the cell. So, a histogram is a picture that describes the variation in a process. It is good to have this visual impression of the distribution of values, along with the mean and standard deviation. Histograms are used in many ways in QC, for example:

- To determine the process capability (central tendency and dispersion)
- To compare the process with the specifications
- To suggest the shape of the population (e.g., normality)
- To indicate discrepancies in data, such as gaps

There are several types of histograms. A histogram shows either absolute frequency (actual occurrence) or relative frequency (percentage). Cumulative histograms show cumulative frequency and reliability cumulative frequency. Each type has its own advantages and is used in different situations. Figure 36-7 shows frequency versus location for 150 measurements. The aim (accuracy) of the process is a bit low, but all the data are well within the tolerances. The disadvantage of the histogram is that it does not show trends and does not take time into account. We can take the data from the histogram and spread them out over time to create a run chart or run diagram.

RUN CHART OR DIAGRAM

A run diagram is a plot of a quality characteristic as a function of time. It provides some idea of general trends and degree of variability. Run charts reveal information that

Common probability distributions

Distribution	Form	Probability function	Comments
Normal	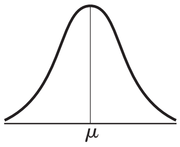	$y = \frac{1}{\sigma\sqrt{2\pi}}\, e{-}\frac{(X-\mu)/^2}{2\sigma^2}$ μ = Mean σ = Standard deviation	Applicable when there is a concentration of observations about the average and it is equally likely that observations will occur above and below the average. Variation in observations is usually the result of many small causes
Exponential	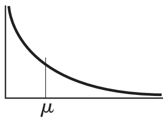	$y = \frac{1}{\mu} e^{-\frac{x}{\mu}}$	Applicable when it is likely that more observations will occur below the average than above
Weibull	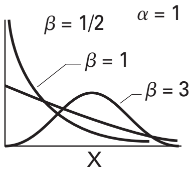	$y = \alpha\beta(X-\gamma)^{\beta-1}e^{-\alpha(x-\gamma)^{\beta}}$ α = Scale parameter β = Shape parameter γ = Location parameter	Applicable in describing a wide variety of patterns of variation, including departures from the normal and exponential
Poisson*	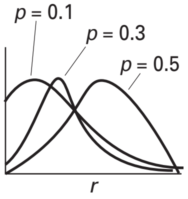	$y = \frac{(np)^r e^{-np}}{r!}$ n = Number of trials r = Number of occurrences p = Probability of occurrence	Same as binomial but particularly applicable when there are many opportunities for occurence of an event but a low probability (less than 0.10) on each trial
Binomial*	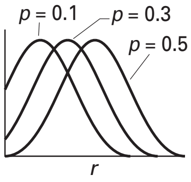	$y = \frac{n!}{r!(n-r)!}\, p^r q^{n-r}$ n = Number of trials r = Number of occurrences p = Probability of occurrence $q = 1 - p$	Applicable in defining the probability of r occurrences in n trials of an event that has a probability of occurrence of p on each trial

* = discrete distributions but shown as curves for ease of comparison

FIGURE 36-6 Common probability distributions that can be used to describe the outputs from manufacturing processes. *(Source:* Quality Control Handbook, *3rd ed.)*

histograms cannot, such as certain trends over time or at certain times of day. Individual measurements (not samples) are taken at regular time intervals, and the points are plotted on a connected line graph as a function of time. The graph can be used to find obvious trends in the process, as shown in Figure 36-8, a run diagram with measurements made every hour over four shifts.

Run diagrams are very important at startup to identify the basic nature of a process. Without this information, one may use an inappropriate tool in analyzing the data. For example, a control chart or histogram might hide tool wear if frequent tool changes and adjustments are made between groups of observations. As a result, run diagrams (with 100% inspection where feasible) should always precede the use of control charts for averages and ranges.

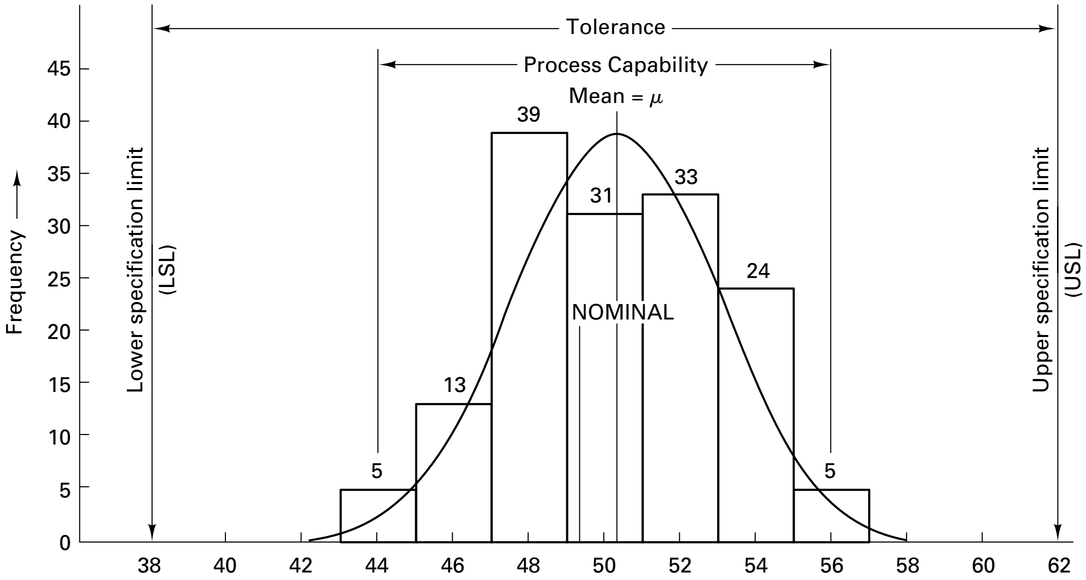

FIGURE 36-7 Histogram shows the output mean μ from the process versus nominal and the tolerance specified by the designer versus the spread as measured by the standard deviation σ. Here nominal = 49.2, USL = 60, LSL = 38, $\mu = 50.2$, $\sigma = 2$.

The lengths of manufactured components are measured. A run diagram is constructed to determine how the process is behaving. During 34 hours, measurements are made every hour (60 minutes) and plotted in the order that rack bars are produced.

First shift	35	40	27	30	30	34	26	31
Second shift	24	23	28	15	23	17	16	21
Third shift	15	13	28	8	20	9	5	11
First shift	16	5	9	13	16	10	9	10

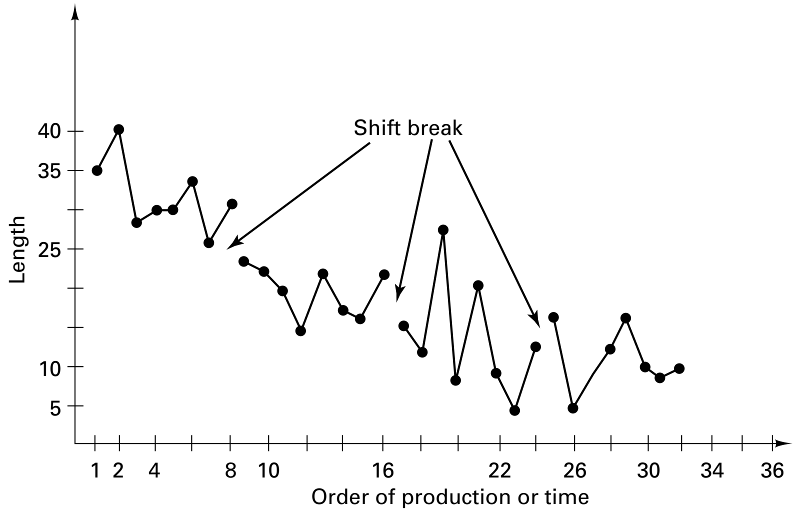

FIGURE 36-8 An example of a run chart or graph, which can reveal trends in the process behavior not shown by the histogram.

PROCESS CAPABILITY INDEXES

The most popular PC index tells you if the process has the ability to meet specifications. This process capability index, C_p, is often computed as follows:

$$C_p = \frac{\text{tolerance spread}}{6\sigma} = \frac{\text{USL} - \text{LSL}}{6\sigma} \tag{36-1}$$

A value of $C_p \geq 1.33$ is considered good

The example in Figure 36-7 has

$$C_p = \frac{\text{USL} - \text{LSL}}{6\sigma} = \frac{24}{12} = 2 \tag{36-2}$$

The process capability ratio, C_p, does not, however, take into account the location of the process mean, μ, with respect to the nominal or the specifications. C_p mearly looks at the variability or spread of process (compared to specifications) in terms of sigmas. So another process capability ratio has been developed for off-center processes. This ratio is called C_{pk}, where

$$\begin{aligned} C_{pk} &= \min C_{pu}, C_{pl} \qquad (36\text{-}3)\\ &= \min\left(C_{pu} = \frac{\text{USL} - \mu}{3\sigma}, C_{pl} = \frac{\mu - \text{LSL}}{3\sigma}\right) \end{aligned}$$

C_{pk} is simply a one-sided ratio for the specification nearest to the process average, μ. To compare the two, look at Figure 36-9. All the histograms have the same standard deviation ($\sigma = 2$) and the same USL − LSL specifications (62−37). For Figure 36-9a, the two indexes are the same. For Figure 36-9b, the mean has shifted to $\mu = 54$ so $C_{pk} = (62-54)/3(2) = 1.5$.

Can you calculate C_{pk} for (c), (d), and (e)? Answers are on the figure.

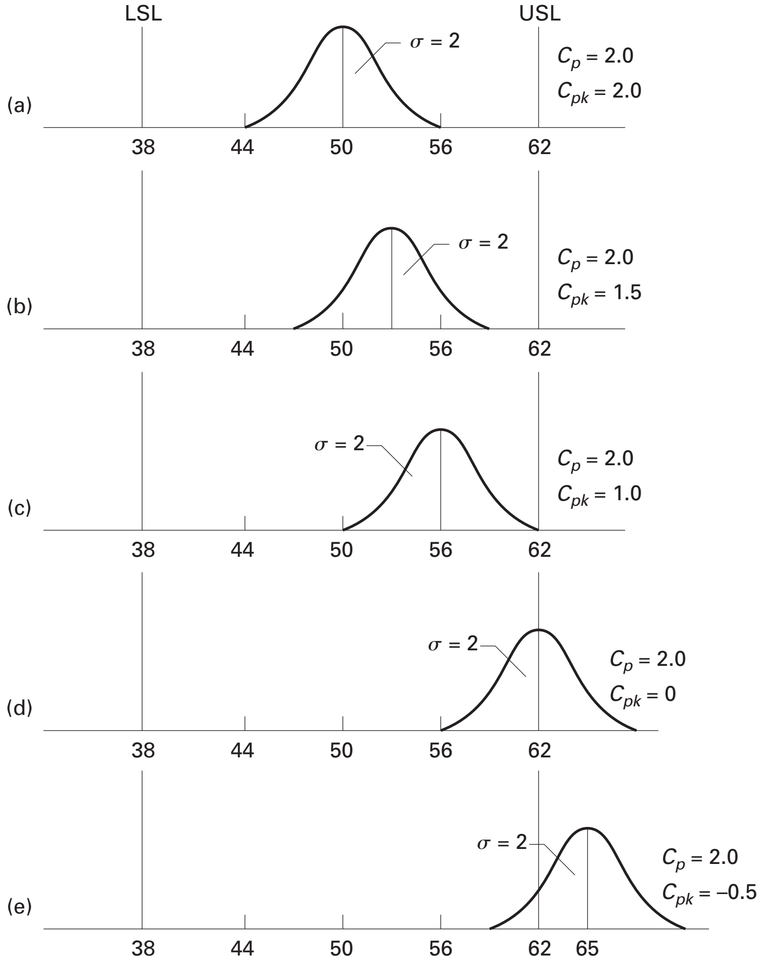

FIGURE 36-9 The output from the process is shifting toward the USL, which changes the C_{pk} ratio but not the C_p ratio.

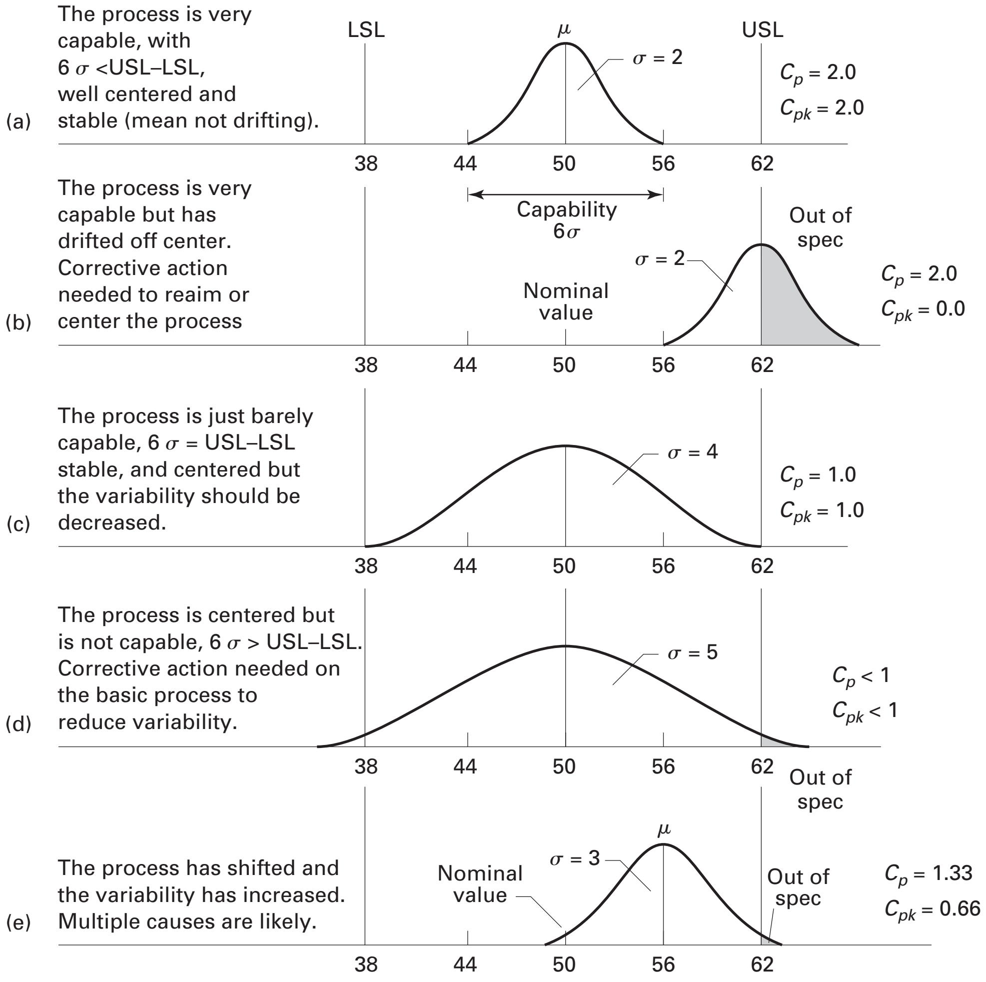

FIGURE 36-10 Five different scenarios for a process output versus the designer's specifications for the minimal (50) and upper and lower specifications of 65 and 38 respectively.

The capability indexes can tell you about the variance, where the width of the histogram is compared with the specifications (Figure 36-10). The natural spread of the process, 6σ, is computed and is then compared with the upper and lower tolerance limits. These situations can exist:

1. $6\sigma < \text{USL} - \text{LSL}$ *or* $C_p > 1$, or process variability less than tolerance spread. See Figure 36-10a.
2. $6\sigma < \text{USL} - \text{LSL}$ but process has shifted. See Figure 36-10b.
3. $6\sigma < \text{USL} - \text{LSL}$ *or* $C_p = 1$, or process variability is just equal to tolerance spread. See Figure 36-10c.
4. $6\sigma < \text{USL} - \text{LSL}$ *or* $C_p < 1$, or process variability is greater than tolerance spread. See Figure 36-10d.
5. The process mean and variability have both changed. See Figure 36-10d.

DISCUSSION OF PROCESS CAPABILITY SCENARIOS

In situation Figure 36-10a, the machine is capable of meeting the tolerances applied by the designer. Generally speaking, if process capability is on the order of two-thirds to three-fourths of the design tolerance, there is a high probability that the process will produce all good parts over a long period of time. If the PC is on the order of one-half or less of the design tolerance, it may be that the selected process is too good; that is, the company may be producing ball bearings when what is called for is marbles. In this case, it may be possible to trade off some precision in this process for looser specifications elsewhere, resulting in an overall economic gain. Quality in well-behaved processes can be maintained by checking the first, middle, and last part of a lot or production run. If these parts are good, then the lot is certain to be good. This is called $n = 3$.

Naturally, if the lot size is 3 or less, this is 100% inspection. Sampling and control charts are also used under these conditions to maintain the process aim and variability.

When the process is not capable of meeting the design specifications, there are a variety of alternatives, including the following:

1. Shifting this job to another machine with greater process capability.
2. Getting a review of the specifications to see if they may be relaxed.
3. Sorting the product to separate the good from the bad. This entails 100% inspection of the product, which may not be a feasible economic alternative unless it can be done automatically. Automatic sorting of the product on a 100% basis can ensure near-perfect quality of all the accepted parts. The automated station shown in Figure 36-11 checks parts for the proper diameter with the aid of a linear variable differential transformer (LVDT). As a part approaches the inspection station on a motor-driven conveyor system, a computer-based controller activates a clamping device. Embedded in the clamp is an LVDT position sensor with which the control computer can measure the diameter of the part. Once the measurement has been made, the computer releases the clamp, allowing the part to be carried away. If the diameter of the part is within a given tolerance, a solenoid-actuated gate operated by the computer lets the part pass. Otherwise, the part is ejected into a bin. With the fast-responding LVDT, 100% of manufactured parts can be automatically sorted quickly and economically.

   Sorting to find defects by automatic inspection is bad because you already paid to produce the defects. Also, automated sorting does not determine what caused the defects, so this example is an "automated defect finder." How would one change this inspection system to make it "inspect to prevent" the defect from occurring?
4. Determining whether the *precision* (repeatability) of the process can be improved by:
   - **a.** Switching cutting tools, workholding devices, or materials
   - **b.** Overhauling the existing process and/or developing a preventive maintenance program
   - **c.** Finding and eliminating the causes of variability, using cause-and-effect diagrams
   - **d.** Combinations of (a), (b), and (c)
   - **e.** Using designed experiments and Taguchi methods to reduce the variability of the process

In Figure 36-10c, the process capability is almost exactly equal to the assigned tolerance spread, so if the process is not perfectly centered, defective products will always result. Thus, this situation should be treated like the situation in Figure 36-10d unless the process can be perfectly centered and maintained. Tool wear, which causes the distribution to shift, must be negligible.

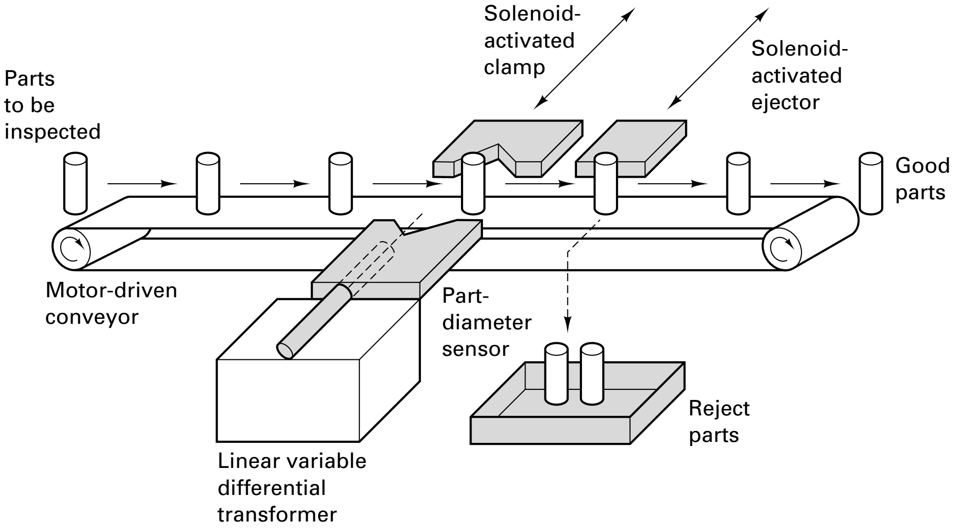

FIGURE 36-11 A linear variable differential transformer (LVDT) is a key element in an inspection station checking part diameters. Momentarily clamped into the sensor fixture, a part pushed the LVDT armature into the device winding. The LVDT output is proportional to the displacement of the armature. The transformer makes highly accurate measurements over a small displacement range.

PC studies can evaluate the ability of the process to maintain centering so that the average of the distribution comes as close as possible to the desired nominal value. Most processes can be re-aimed. Poor accuracy is often due to assignable causes, which can be eliminated.

In addition to direct information about the accuracy and the precision of the process, PC studies can also tell the manufacturing engineer how pilot processes compare with production processes, and vice versa. If the source and time of the manufacture of each product are carefully recorded, information about the instantaneous reproducibility can be found and compared with the repeatability of the process with respect to time (time-to-time variability). More important, since almost all processes are duplicated, PC studies generate information about machine-to-machine variability. Going back to our target-shooting example, suppose that nine different guns were used, all of the same make and type. The results would have been different, just as having nine marksmen use the same gun would have resulted in yet another outcome. Thus, PC studies generate information about the homogeneity and the differences in multiple machines and operators.

It is quite often the case in such studies that one variable dominates the process. Target shooting viewed as a process is “operator dominated” in that the outcome is highly dependent on the skill (the capability) of the “worker.” Processes that are not well engineered or highly automated, or in which the worker is viewed as “highly skilled,” are usually operator dominated. Processes that change or shift uniformly with time but that have good repeatability in the short run are often machine dominated. For example, the mean of a process (μ) will usually shift after a tool change, but the variability may decrease or remain unchanged. Machines tend to become more precise (to have less variability within a sample) after they have been “broken in” (i.e., the rough contact surfaces have smoothed out because of wear) but will later become less precise (will have less repeatability) due to poor fits between moving elements (called *backlash*) of the machine under varying loads. Other variables that can dominate processes are setup, input parameters, and even information.

In many machining processes in use today, the task of tool setting has been replaced by an automatic tool-positioning capability, which means that one source of variability in the process has been eliminated, making the process more repeatable. In the same light, it will be very important in the future for manufacturing engineers to know the process capability of robots they want to use in the workplace.

The discussion to this point has assumed that the *parent population* is normally distributed, that is, has the classic bell-shaped distribution in which the percentages (shown in Figure 36-5) are dictated by the number of standard deviations from the central value or mean. The shape of the histogram may reveal the nature of the process to be skewed to the left or the right (unsymmetrical), often indicating some natural limit in the process. Drilled holes exhibit such a trend, as the drill tends to make the hole oversize. Another possibility is a bimodal distribution (two distinct peaks), often caused by two processes being mixed together. Suppose you had a manufacturing cell as used in lean production and you were using a *check sheet* to gather data on one of the operations. See Figure 36-12. The time to perform an assembly task is being recorded. Why do you think the data are bimodal? In the cell design, shown in Chapter 1, Figure 1-9, operation 7 (caulking) was shared by two operators. The data would suggest that they do not do the assembly process the same way, since there appears to be a 5- or 6-second difference in their average time to complete this task. Clearly further study is needed to determine what the real problem was. For the next check sheet, use a different symbol for each worker.

The check sheet is an excellent way to view data while it is being collected. It can be constructed using predetermined parameters based on experience with the cell or system. The appropriate interval is checked as the data are being collected. This often allows the central tendency and the spread of the data to be seen. The check sheet can provide basically the same information as the histogram, but it is easier to build (once the check sheet is formatted).The possibilities are endless and require a careful recording of all the sources of the data to track down the factors that result in loss of precision and accuracy in the process. Rapid feedback on quality is perhaps the most important factor, so these data-gathering tasks are done right on the factory floor, by the operators.

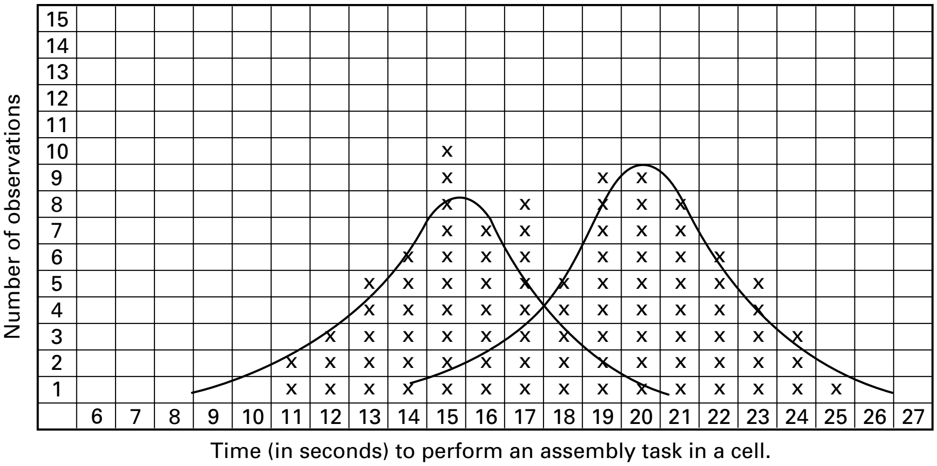

FIGURE 36-12 Example of a check sheet for gathering data on a process.

36.3 INSPECTION TO CONTROL QUALITY

In virtually all manufacturing, it is extremely important that the dimensions and quality of individual parts be known and maintained. This is of particular importance where large quantities of parts, often made in widely separated plants, must be capable of interchangeable assembly. Otherwise, difficulty may be experienced in subsequent assembly or in service, and costly delays and failures may result. In recent years, defective products resulting in death or injury to the user have resulted in expensive litigation and damage awards against manufacturers. Inspection is the function that controls the quality (e.g., the dimensions, the performance, and the color) manually, by using operators or inspectors, or automatically, with machines, as discussed previously.

The economics-based question "How much should be inspected?" has three possible answers:

1. *Inspect every item being made*. 100% inspect every item being made; 100% checking with prompt execution of feedback and immediate corrective action can ensure perfect quality.
2. *Sample.* Inspect some of the product by sampling and make decisions about the quality of the process based on the sample.
3. *None.* Assume that everything made is acceptable or that the product is inspected by the consumer, who will exchange it if it is defective. (This is not a recommended procedure).

The reasons for not inspecting all of the product (i.e., for sampling) include the following:

1. Everything has not yet been manufactured—the process is continuing to make the item—so we have to look at some before we are done with all.
2. The test is destructive.
3. There is too much product for all of it to be inspected.
4. The testing takes too much time or is too complex or too expensive.
5. It is not economically feasible to inspect everything even though the test is simple, cheap, and quick.

Some characteristics are nondissectible; that is, they cannot be measured during the manufacturing process because they do not exist until after a whole series of operations have taken place. The final edge geometry of a razor blade is a good example, as is the yield strength of a rolled bar of steel.

Sampling (looking at some percentage of the whole) requires the use of statistical techniques that permit decisions about the acceptability of the whole based on the quality found in the sample. This is known as *statistical process control*.

STATISTICAL PROCESS CONTROL (SPC)

Looking at some (sampling) and deciding about the behavior of the whole (the parent population) is common in industrial inspection operations. The most widely used basic SPC technique is the control charts.

In particular, *control charts for variables* are used to monitor the output of a process by sampling (looking at some), by measuring selected quality characteristics, by plotting the sample data on the chart, and then by making decisions about the performance of the process.

Figure 36-13 shows the basic structure of two charts commonly used for variable types of measurements. The $\overline{X}$ chart tracks the aim (accuracy) of the process. The R chart (or σ chart) tracks the precision or variability of the process. Usually, only the $\overline{X}$ chart and the R chart are used unless the sample size is large, and then σ charts are used in place of R charts. For each sample, the following calculations are made:

$$(\text{mean})\overline{X} = \frac{\sum x_i}{n} \qquad (36\text{-}4)$$

$$n = \text{sample size}$$

$$(\text{range})R = x_{\text{HIGH}} - x_{\text{LOW}} \qquad (36\text{-}5)$$

Sometimes the standard deviation is calculated:

$$(\text{sigma})\sigma = \sqrt{\frac{\sum (x_i - \overline{x})^2}{n-1}} \qquad (36\text{-}6)$$

$$n = \text{sample size}$$

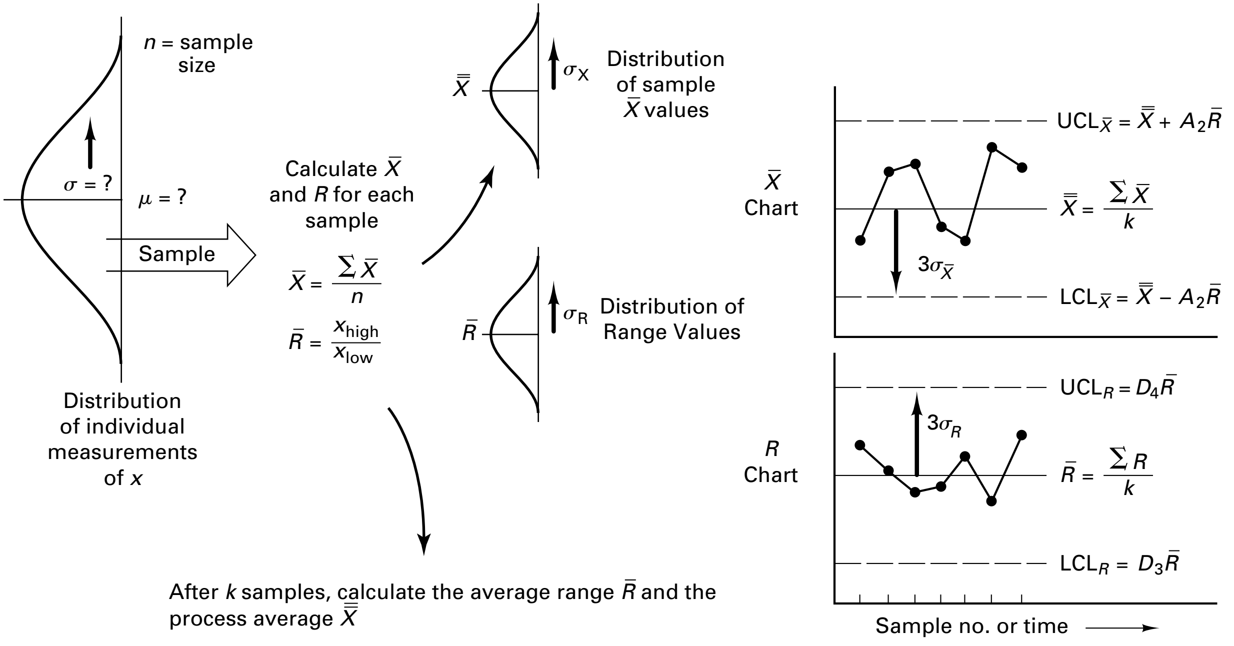

After k samples, calculate the average range $\overline{R}$ and the process average $\overline{\overline{X}}$

$$\overline{R} = \frac{R_1 + R_2 + \ldots R_k}{k} \qquad \overline{\overline{X}} = \frac{\overline{X}_1 + \overline{X}_2 + \ldots \overline{X}_k}{k}$$

$$\text{UCL}_{\overline{X}} = \overline{\overline{X}} + A_2\overline{R} = \overline{\overline{X}} + 3\sigma_{\overline{X}}$$

$$\text{LCL}_{\overline{X}} = \overline{\overline{X}} - A_2\overline{R} = \overline{\overline{X}} - 3\sigma_{\overline{X}}$$

$$\text{UCL}_R = D_4\overline{R} \qquad LCL_R = D_3\overline{R}$$

$$3\sigma_{\overline{X}} = 3\frac{\sigma}{\sqrt{n}} = 3\,\frac{\overline{R}}{d_2\sqrt{n}} = A_2\overline{R}$$

Sample Size	$\overline{X}$	R Chart		Est.	σ'
(n)	A_2	D_3	D_4	d_2	c_2
2	1.88	.00	3.27	1.13	.56
3	1.02	.00	2.57	1.69	.72
4	0.73	.00	2.28	2.06	.80
5	0.58	.00	2.11	2.33	.84
6	0.48	.00	2.00	2.53	.87
7	0.42	.08	1.92	2.70	.89
8	0.37	.14	1.86	2.85	.90
9	0.34	.18	1.82	2.97	.91
10	0.31	.22	1.78	3.08	.92

FIGURE 36-13 Quality control chart calculations. On the charts, plot $\overline{X}$ and R values over time. The constants for calculating UCL and LCL values for the $\overline{X}$ and R charts are based on 3 standard deviations.

The samples are drawn over time.

Because some sample statistics tend to be normally distributed about their own mean, $\overline{X}$ values are normally distributed about $\overline{\overline{X}}$, R values are normally distributed about $\overline{R}$, and σ values are normally distributed about $\overline{\sigma}$.

Quality control charts are widely used as aids in maintaining quality and in achieving the objective of detecting trends in quality variation before defective parts are actually produced. These charts are based on the previously discussed concept that if only chance causes of variation are present, the deviation from the specified dimension or attribute will fall within predetermined limits.

When sampling inspection is used, the typical sample sizes are from 3 to about 12 units. The $\overline{X}$ chart tracks the sample averages ($\overline{X}$ values). The R chart plots the range values (R values). Figure 36-14 shows one example of $\overline{X}$ and R charts for measuring a dimension of a gap on a part called the retainers. Twenty-five samples of size 5 were taken over six days, and this sample data will be used to prepare the control charts.

The centerline of the $\overline{X}$ chart was computed prior to actual usage of the charts in control work:

$$\overline{\overline{X}} = \frac{\sum_{i=1}^{k} \overline{X}}{k} \tag{36-7}$$

where $\overline{X}$ was a sample average and k was the number of sample averages. The horizontal axis for the charts is time, thus indicating *when* the sample was taken. $\overline{\overline{X}}$ serves as an estimate for μ, the true center of the process distribution. $\overline{\overline{X}}$ is also centerline of the $\overline{X}$ chart. The upper and lower control limits are commonly based on 3 standard error units, $3\sigma_{\overline{x}}$ ($\sigma_{\overline{x}}$ is the standard deviations for the distribution of $\overline{X}$'s about $\overline{\overline{X}}$).

Thus,

$$\begin{aligned} \text{UCL}_{\overline{X}} &= \text{upper control limit on } \overline{X} \text{ chart} \\ &= \mu + 3\sigma_{\overline{x}} \text{ or} \\ &= \mu + A_2\overline{R} \\ \text{LCL}_{\overline{X}} &= \text{lower control limit, } \overline{X} \text{ chart} = \mu - 3\sigma_{\overline{X}} \\ &= \mu - A_2R \end{aligned} \tag{36-8}$$

(see Figure 36-13 for A_2 values). The upper and lower control limits are entered as dashed lines on the chart. The $\overline{X}$ chart is used to track the central tendency (aim) of the process. In this example, the samples were being taken 4 times a day. The R chart is used to track the variability or dispersion of the process. A σ chart could also be used. R is computed for each sample ($x_{\text{HIGH}} - x_{\text{LOW}}$). The value of $\overline{R}$ is calculated as:

$$\overline{R} = \frac{\sum_{i=1}^{k} R}{k}$$

where $\overline{R}$ represents the average range of k range values. The range values are normally distributed about $\overline{R}$, with standard deviation σ_R. To determine the upper and lower control limits for the charts, the following relationships are used.

$$\text{UCL}_R = \text{upper control limit, } R \text{ chart} = \overline{R} + 3\sigma_R = D_4\overline{R} = 2.11\overline{R} \text{ for } n = 5$$

$$\text{LCL}_R = \text{lower control limit} = R = 3\sigma_R = D_3\overline{R} = 0$$

where D_4 and D_3 are constants and are given in Figure 36-13. For small values of n, the distance between centerline R and LCL $_R$ is more than $3\sigma_R$, but LCL_R cannot be negative, as negative range values are not allowed, by definition. Hence, $D_3 = 0$ for values of n up to 6.

VARIABLES CONTROL CHART X&R
Averages & Ranges

Part/Asm. Name *Retainer*	Operation *Bend Clip*	Specification .50 – .90 mm	Nominal Size .70 mm
Part No. 1234567	Department 105	Gage *Depth Gage Micrometer*	
Parameter *Gap. Dim.* "A"	Machine 030	Sample Size/Frequency 5/2 *Hours*	

Date		6/8				6/9				6/10				6/11				6/12				6/15				6/16
Time of day		8	10	12	2	8	10	12	2	8	10	12	2	8	10	12	2	8	10	12	2	8	10	12	2	8
Operator																										
Sample Measurements Value of *X*	1	.65	.75	.75	.60	.70	.60	.75	.60	.65	.60	.80	.85	.70	.65	.90	.75	.75	.75	.65	.60	.50	.60	.80	.65	.65
	2	.70	.85	.80	.70	.75	.75	.80	.70	.80	.70	.75	.75	.70	.70	.80	.80	.70	.70	.65	.60	.55	.80	.65	.60	.70
	3	.65	.75	.80	.70	.65	.75	.65	.80	.85	.60	.90	.85	.75	.85	.80	.75	.75	.60	.85	.65	.65	.65	.75	.65	.70
	4	.65	.85	.70	.75	.85	.85	.75	.75	.85	.80	.60	.65	.75	.75	.75	.80	.70	.70	.65	.60	.80	.65	.65	.60	.60
	5	.85	.65	.75	.65	.80	.70	.70	.75	.75	.65	.80	.70	.70	.60	.85	.65	.80	.60	.70	.65	.80	.75	.65	.70	.65
Sum		3.50	3.85	3.80	3.40	3.75	3.65	3.65	3.60	3.90	3.35	3.75	3.80	3.60	3.55	4.10	3.75	3.80	3.35	3.50	3.10	3.30	3.45	3.50	3.20	3.30
Average $\bar{X}$		.70	.77	.76	.68	.75	.73	.73	.72	.78	.67	.75	.76	.72	.71	.82	.75	.76	.67	.70	.62	.66	.69	.70	.64	.66
Range *R*		.20	.20	.10	.15	.20	.25	.15	.20	.20	.20	.40	.20	.05	.25	.15	.15	.15	.15	.20	.05	.30	.20	.15	.10	.10

$\bar{\bar{X}} = (.70 + .77 + \ldots + .64 + .66)/25 = 17.90/25 = .716$ $\quad UCL_{\bar{X}} = .716 + (.58 \times .178) = .819$

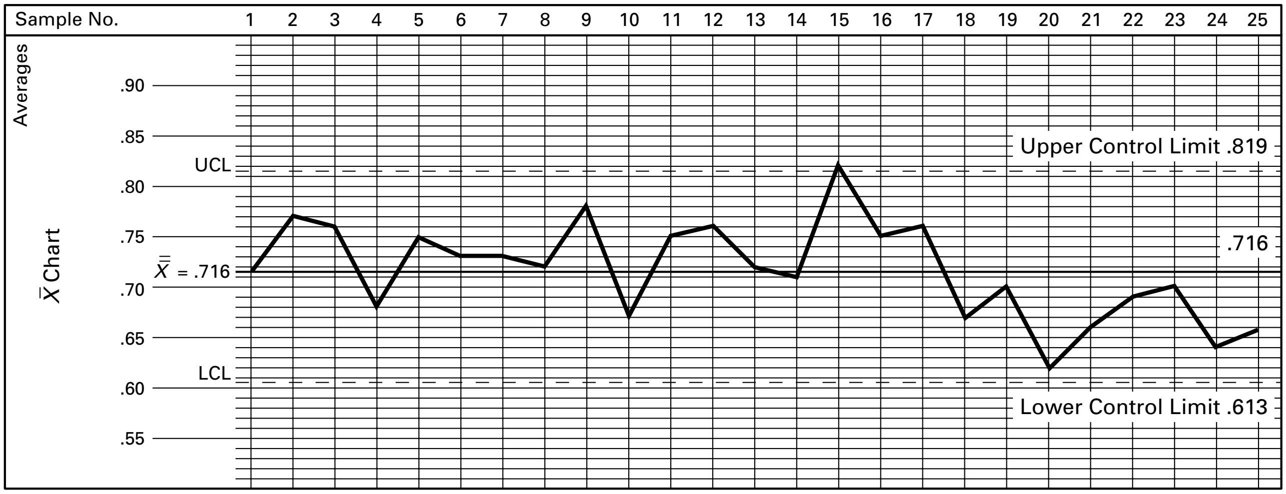

$\bar{R} = 4.45/25 = .176$ $\quad UCL_R = 2.11 \times .178 = .376$ $\quad LCL_R = 0$

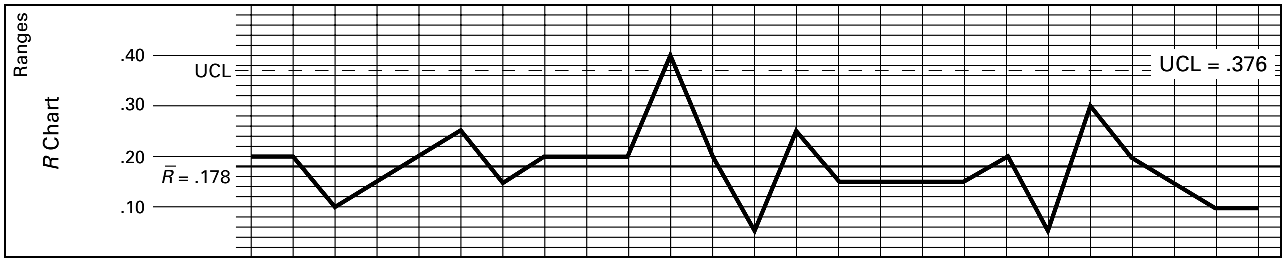

FIGURE 36-14 Example of $\bar{X}$ and R charts and the data set of 25 samples [$k = 25$ of size 5 ($n = 5$)].
(*Source : Continuing Process Critical and Process Capability Improvement, Statistical Methods Office, Ford Motor Co., 1985.)*

After control charts have been established, and the average and range values have been plotted for each sample group, the charts act as a control indicator for the process. If the process is operating under chance cause conditions, the data will appear random (will have no trends or pattern). If $\bar{X}$, R, or σ values fall outside the control limits or if nonrandom trends occur (like 7 points on one side of the central line or 6 successive increasing or decreasing points appear), an assignable cause or change may have occurred, and some action should be taken to correct the problem.

Trends in the control charts often indicate the existence of an assignable cause factor before the process actually produces a point outside the control limit. In grinding operations, wheel wear (wheel undersize) results in the parts becoming oversized and corrective action should be taken. (Redress and reset the wheel or replace it with a new wheel.) Note that defective parts can be produced even if the points on the charts indicate the process is in control. That is, it is possible for something to change in the process, causing defective parts to be made, and the sample point still to be within the control limits. Since no corrective action was suggested by the charts, a type II error was made. Subsequent operations will then involve performing additional work on products already defective. Thus the effectiveness of the SPC approach in improving quality is often deterred by the time lag between the discovery of an abnormality and the corrective action.

With regard to control charts in general, it should be kept in mind that the charts are only capable of indicating that something has happened, not what happened, and that a certain amount of detective work will be necessary to find out what has occurred to cause a break from the random, normal pattern of sample points on the charts. Keeping careful track of when and where the sample was taken will be very helpful in such investigations, but the best procedure is to have the operator take the data and run the chart. In this way, quality feedback is very rapid and the causes of defects readily found.

36.4 PROCESS CAPABILITY DETERMINATION FROM CONTROL CHART DATA

After the process is determined to be "under control," the data can be used to estimate the process capability parameters.

As an example, examine the data in Figure 36-14. These are measurements of the gaps in 125 retainers. They are supposed to have a nominal size of 0.70 mm. The population is assumed to be normal, and only chance variations are occurring. (Could you make a histogram of these 125 measurements?) The mean for all the data can be obtained by equation 36-4

$$\overline{X} = \frac{\sum_{i=1}^{125} x_i}{n}$$

where x_i is an individual measurement and the number of items was 125. The mean is a measure of the central tendency around which the individual measurements tend to group. The variability of the individual measurements about the average may be indicated by the standard deviation, σ, where

$$\sigma = \frac{\sqrt{\sum_{i=1}^{n} (x_i - \overline{X})^2}}{n} \text{ where } n = 125$$

But more commonly the sample data are used to make determinations of the process control.

A sample size of 5 was used in this example, so $n = 5$. Twenty-five groups or samples were drawn from the process, so $k = 25$. For each sample, the *sample mean* $\overline{X}$ and the *sample range R* are computed. [For large samples ($n > 12$), the standard deviation of each sample should be computed rather than the range.] Next, the average of the sample averages, $\overline{\overline{X}}$, is computed as shown in Figure 33-14. This is sometimes called the *grand average*. This is used to estimate the mean of the process, μ. The standard deviation of the process, which is a measure of the spread or variability of the process, is estimated from either the average of the sample ranges, $\overline{R}$, or the average of the sample standard deviations, $\overline{\sigma}$, using either $\overline{R}/d_2$ or $\overline{\sigma}/c_2$. The factors d_2 and c_2 depend on the sample size n and are given in the table in Figure 36-13. So μ is estimated by $\overline{\overline{X}}$ and σ is estimated by $\overline{R}/d_2$ or $\overline{\sigma}/c_2$.

The standard deviation of the distribution of the $\overline{X}$ values about $\overline{\overline{X}}$, $\sigma_{\overline{X}}$, is related to the standard deviation of the parent population, σ, by $\sigma_{\overline{X}} = \sigma/\sqrt{n}$.

Now these estimates can be used to determine the process capability of the process in the same way the histogram was used.

36.5 DETERMINING CAUSES FOR PROBLEMS IN QUALITY

The best way to quickly isolate quality problems is to make everyone an inspector. This means every worker, foreman, supervisor, engineer, manager, and so forth is responsible for making it right the first time and every time. One very helpful tool in this effort is the fishbone diagram. As shown in Figure 36-15, the fishbone diagram can be used in conjunction with the control chart to root out the causes of problems. The problem can have multiple causes, but in general, the cause will lie in the process, operators, materials, or method (i.e., the four main branches on the chart). Every time a quality problem is caused by one of these events, it is noted by the observer, and corrective action is taken. As before, experimental design procedures to be discussed later can help identify causes that affect performance.

Cause-and-effect (C&E) diagrams are also known as fishbone diagrams because of their structure. Initially developed by Kaorw Ishikowa in 1943, this diagram organizes theories about the probable cause of a problem. On the main line is a quality characteristic that is to be improved or the quality problem being investigated. Fishbone lines are drawn from the main line. These lines organize the main factors that could have caused the problem. Branching from each of these factors are even more detailed factors. Everyone taking part in making a diagram gains new knowledge of the process. When a diagram serves as a focus for the discussion, everyone knows the topic, and the conversation does not stray. The diagram is often structured around four branches: the machine tools (or processes), the operators (workers), the method, and the material being processed. Another version of the diagram is called the CEDAC, the cause-and-effect diagram with the addition of cards. The effect is often tracked with a control chart. The possible causes of the defect or problem are written on cards and inserted in slots in the charts.

The three main applications of C&E diagrams are as follows:

I. *Cause enumeration:* Every possible cause and subcause is listed.
  a. *Visual presentations* are one of the most widely used graphical techniques for QC.
  b. A better understanding of the relationships within the process yields a better understanding of the process as a whole.

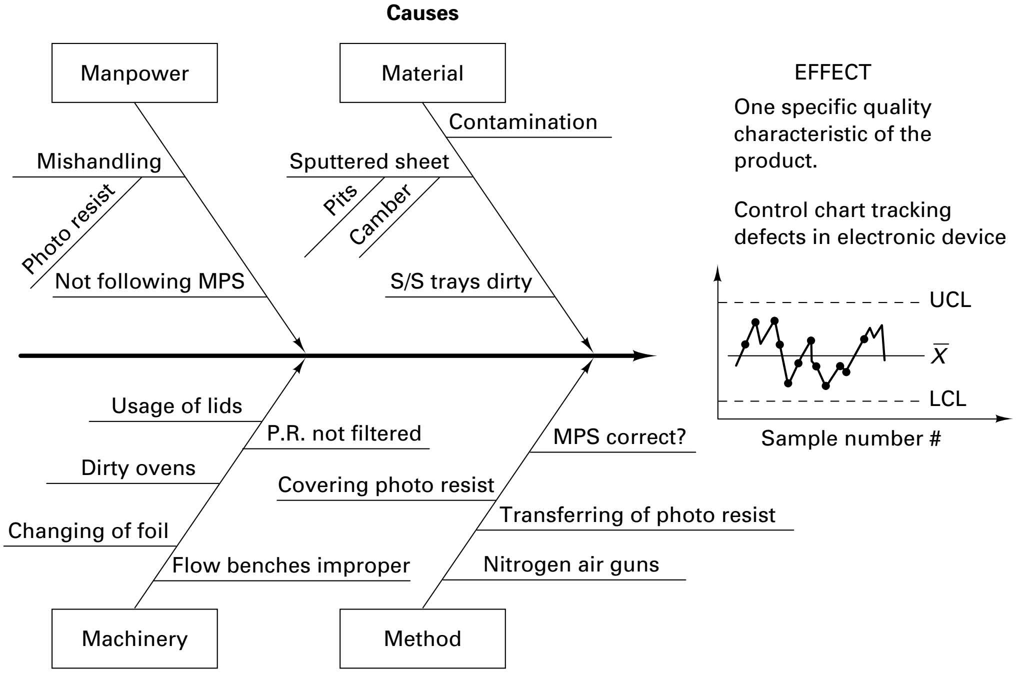

FIGURE 36-15 Example of a fishbone diagram using a control chart to show effects.

II. *Dispersion analysis* involves grouping causes under similar headings; the four M's are men, machines, materials, and methods.
  a. Each *major* cause is thoroughly analyzed.
  b. There is the possibility of not identifying the root cause (may not fall into main categories).

III. *Process analysis* is similar to creating a flow diagram.
  a. Each part of the process is listed in the sequence in which operations are performed.

In summary, data are gathered to develop the early PC studies and to prepare the initial control charts for the process. The removal of all assignable causes for variability and proper setting of the process average requires that operators and engineers work together to find the causes for variation. After the charts have been in place for some time and a large amount of data have been obtained from the process output, the PC study can be redone to obtain better estimates of the natural spread of the process during actual production. On-line or in-process methods such as SPC and off-line (Taguchi) methods are key elements in a total quality control programs.

SAMPLING ERRORS

It is important to understand that in sampling, two kinds of decision errors are always possible; see Figure 36-16. Suppose that the process is running perfectly, but the sample data indicate that something is wrong. You, the quality engineer, decide to stop the process to make adjustments. This is a type I error. Alternately, suppose that the process was not running perfectly and was making defective products. However, the sample data did not indicate that anything was wrong. You decided *not to stop* the process and set it right. This is a type II error. Both types of errors are possible in sampling. For a given sample size, reducing the chance of one type of error will increase the chance of the other. Increasing the sample size or the frequency of sampling reduces the probability of errors but increases the cost of the inspection. It is common practice in control chart work to set the upper and lower control limits at 3 standard deviations. This makes the probability of an alpha error very small and the probability of a beta error quite large. Many companies determine the size of the errors they are willing to accept according to the overall cost of making the errors plus the cost of inspection. If, for example, a type II error is very expensive in terms of product recalls or legal suits, the company may be willing to make more type I errors, to sample more, or even to go to 100% inspection on very critical items to ensure that the company is not accepting defective materials and passing them on to the customer. The inspection should take place immediately after the processing.

As mentioned earlier, in any continuing manufacturing process, variations from established standards are of two types: (1) *assignable-cause variations*, such as those due to malfunctioning equipment or personnel, to defective material, or to a worn or broken tool; and (2) *normal-chance variations*, resulting from the inherent nonuniformities that exist in materials and in machine motions and operations. Deviations due to assignable causes may vary greatly. Their magnitude and occurrence are unpredictable and thus should be prevented. However, if the assignable causes of variation are removed from a given opera-

	The process is running. It really has:	
	Changed (making defects)	Not changed
Based on the sample, you decide the process has changed	No error	Type I α error
Based on the sample, you decide the process has not changed	Type II β error	No error

Type I (α error) Saying the process has changed when it has not changed
Type II (β error) Saying the process has not changed when it has changed

FIGURE 36-16 When you look at some of the output from a process and decide about the whole (i.e., the quality of the process), you can make two kinds of errors.

tion, the magnitude and frequency of the chance variations can be predicted with great accuracy. Thus, if one can be assured that only chance variations will occur, the quality of the product will be better known, and manufacturing can proceed with assurance about the results. By using statistical process control procedures, one may detect the presence of an assignable-cause variation and after investigation to find the cause and remove it before it causes quality to become unacceptable. Also, the astute application of statistical experimental design methods (Taguchi experiments) can help to identify some assignable causes.

To sum up, PC analysis and process improvements help to get the process "under control." Control charts help to keep the process on center ($\overline{X}$ chart) with no increases in variability (R chart or σ chart).

GAGE CAPABILITY

The instrument (gage) used to measure the process will also have some inherent precision and accuracy, often referred to as gage capability. In other words, the observed variation in the component part being measured is really composed of the actual process variation plus the variation in the measured system; see Figure 36-17. The measuring system will display:

- *Bias*: poor accuracy or aim
- *Linearity*: accuracy changes over the span of measurements
- *Stability*: accuracy changes over time
- *Repeatability*: loss of precision in the gage (variability)
- *Reproducibility*: variation due to different operators

Measurements made by different operators will have different means and different variation about the mean when performing a measurement. Determining the capability of the gage is called an *R and R* study. In selecting a gage, the engineer tries to get the variation in the gage (as measured by the standard deviation) to be less than 10% of the total tolerance spread (USL − LSL). This is called the 10% rule, and the *R* and *R* study can determine the magnitude of the gage variability. Space does not permit a full discussion here of *R* and *R* studies, but detailed descriptions are found in Montgomery (2001), cited in the reference section at the end of the book. In particular, students involved in ISO9000 studies should examine the *Measurement System Analysis Reference Manual*, published by the Automotive Industry Action Group.

DESIGN OF EXPERIMENTS (DOE) AND TAGUCHI METHODS

Foreign competition has forced American manufacturers to take a second look at quality, as evidenced by the major emphasis (reemphasis) on SPC in American industry. This drive toward superior quality has led to the introduction of Taguchi methods for improvement in products, product design, and processes. Basically, SPC looks at processes and control, the latter loosely implying "improvement." DOE and Taguchi methods, however, span a much wider scope of functions and include the design aspects of products and processes, areas that were seldom, if ever, formally treated from the quality standpoint. Another threshold has been reached in quality control, witnessed by an expanding role of quality in the production of goods and services. The consumer is the central focus of attention on quality, and the methods of quality design and controls have been incorporated into all phases of production.

The Taguchi methods incorporate the following general features:

1. Quality is defined in relation to the total loss to the consumer (or society) from less-than-perfect quality of the product. The methods include placing a monetary value on quality loss. Anything less than perfect is waste.

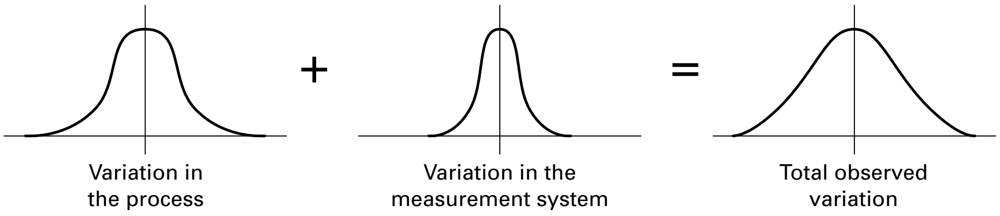

FIGURE 36-17 Gage capability (variation) contributes to the total observed variation in the measurement of a part.

2. In a competitive society, continuous quality improvement and cost reduction are necessary for staying in business.
3. Continuous quality improvement requires continuous reduction in the variability of product performance characteristics with respect to their target values.
4. The quality and cost of a manufactured product are determined by the engineering designs of the product and its manufacturing system.
5. The variability in product and process performance characteristics can be reduced by exploiting the nonlinear (interactive) effects of the process or product parameters on the performance characteristics.
6. Statistically planned (Taguchi) experiments can be used to determine settings for processes and parameters that reduce the performance variation.
7. Design and improvement of products and processes can make them *robust*, or less sensitive to uncontrollable or difficult-to-control variations, called *noise* by Taguchi.

In the Taguchi approach, specified combinations of all of the input parameters, at various levels, that are believed to influence the quality characteristics being measured are used. These combinations should be run with the objective of selecting the best level for individual factors. For example, speed levels may be high, normal, and low; and operators may be fast or slow. For a Taguchi approach, material is often an input variable specified at different levels: normal, homogeneous, and highly variable. If a material is not controllable, it is considered a noise factor.

Designed experiments and Taguchi methods can be used as alternative approaches to making a PC study. The Taguchi approach uses a truncated experimental design (called an *orthogonal array*) to determine which process inputs have the greatest effect on process variability (i.e., precision) and which have the least. Those inputs that have the greatest influence are set at levels that minimize their effect on process variability. As shown in Figure 36-18, factors A, B, C, and D all have an effect on process variability V. By selecting a high level of A and low levels of B and C, the inherent variability of the process can be reduced. Those factors that have little effect on process variability,

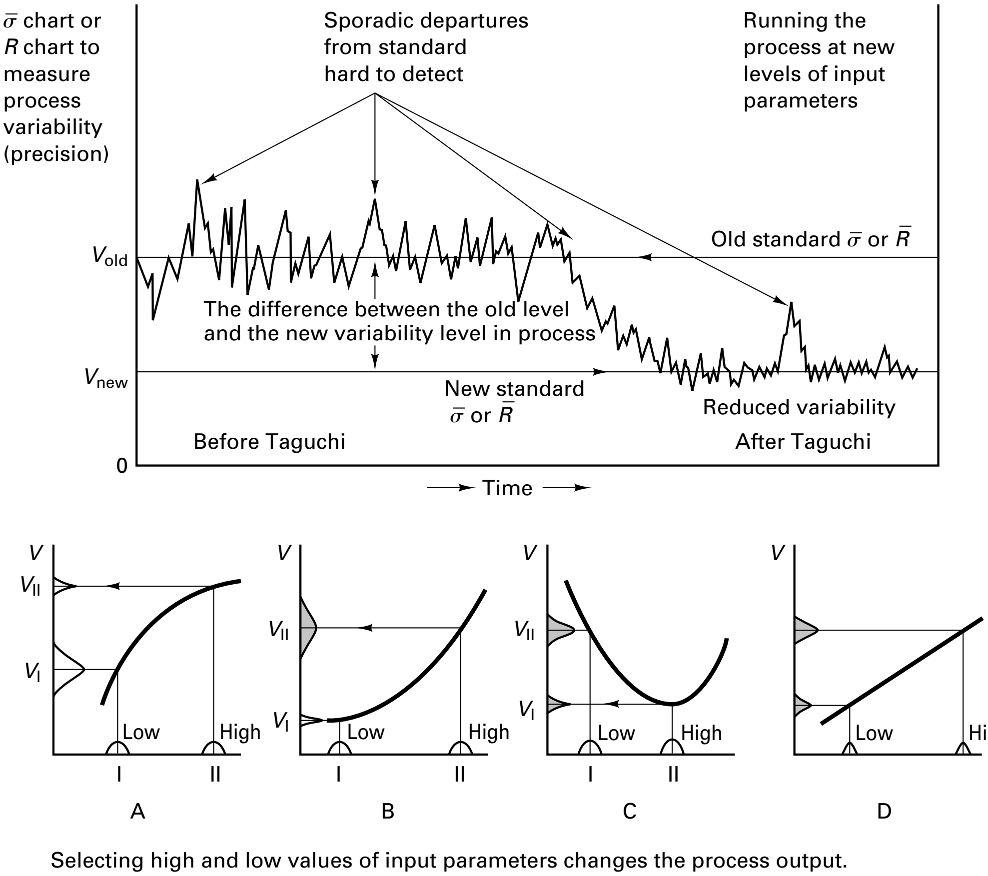

Selecting high and low values of input parameters changes the process output.

FIGURE 36-18 The use of Taguchi methods can reduce the inherent process variability, as shown in the upper figure. Factors A, B, C, and D versus process variable V are shown in the lower figure.

like factor D, are used to adjust or recenter the process aim. In other words, Taguchi methods seek to minimize or dampen the effect of the causes of variability and thus to reduce the total process variability. This is also the goal of the six sigma method, which is discussed next.

The methods are, however, more than just mechanical procedures. They infuse an overriding new philosophy into manufacturing management that basically makes quality the primary issue in manufacturing. The manufacturing world is rapidly becoming aware that the consumer is the ultimate judge of quality. Continuous quality improvement toward perfect quality is the ultimate goal. Finally, it is recognized that the ultimate quality and lowest cost of a manufactured product are determined to a large extent by the engineered designs of the following:

1. The product
2. The manufacturing process technology and the sequences of processes
3. The manufacturing system (integration of the product and the process)

So, a new understanding of quality has emerged. Process variability is not fixed. It can be improved! The noise level of a process can be reduced by exploring the nonlinear effects of the product (or process) parameters on the performance characteristics.

Process capability must be also addressed in the context of machining centers and [programmable numerical control (NC)] machines. In machine tools, accuracy and precision in processing are affected by machine alignment, the setup of the workholder, the design and rigidity (accuracy) of the workholder, the accuracy of the cutting tools, the design of the product, the temperature, and the operating parameters. DOE and Taguchi methods provide a means of determining which of the input parameters are most influential in product quality when the operator is no longer there to compensate for the variability.

MOTOROLA'S SIX SIGMA

In order to meet the quality challenge of the Japanese, an American company, Motorola, developed the six sigma concept. The concept is shown in Figure 36-19 in terms of four sigma and six sigma capability. Most people do not know how sigma is determined (σ is estimated from $\overline{R}/d_2$ or σ/C_2 sample data), that a sigma is a standard deviation, or what sigma measures (sigma measures the repeatability or variability or lack of precision in a process).

In essence, the six sigma concept calls for the process to be improved to the place where there are 12 standard deviations between USL and LSL. As the variability of a process changes, so does sigma. A reduction in sigma (a reduction in spread) reflects an improvement in process or an improvement in precision (better repeatability). As the process is improved, sigma decreases. So the question is: "How do I improve the process?" This is the essence of process capability work outlined in this chapter.

Here is an example. A foundry was having a problem with cores breaking in the molds during pouring. A PC study determined that the core strength was widely variable and that it was the low-strength cores that broke when the molten metal hit them during filling. Increasing the resin content in the cores and changing the gating in the mold did not eliminate the problem, so a Taguchi study was run that revealed that core strength was highly dependent on the grain size of the sand, which was also highly variable. The sand preparation process was revised to yield more uniform-sized grains, which, when used in the core-packing process, reduced the variability in the strength characteristic and eliminated the core breakage problem.

TOTAL QUALITY CONTROL (TQC)

The phrase *total quality control* (TQC) was first used by A. V. Feigenbaum in *Industrial Quality Control* in May 1957. TQC means that all departments of a company must participate in quality control (Table 36-1). Quality control is the responsibility of workers at every level in every department, all of whom have had quality control training. It begins at the product design stages and carries through the manufacturing system, where the emphasis is on making it right the first time. It is surprising how few companies have embarked on implementing Taguchi methods in order to reduce the inherent variability

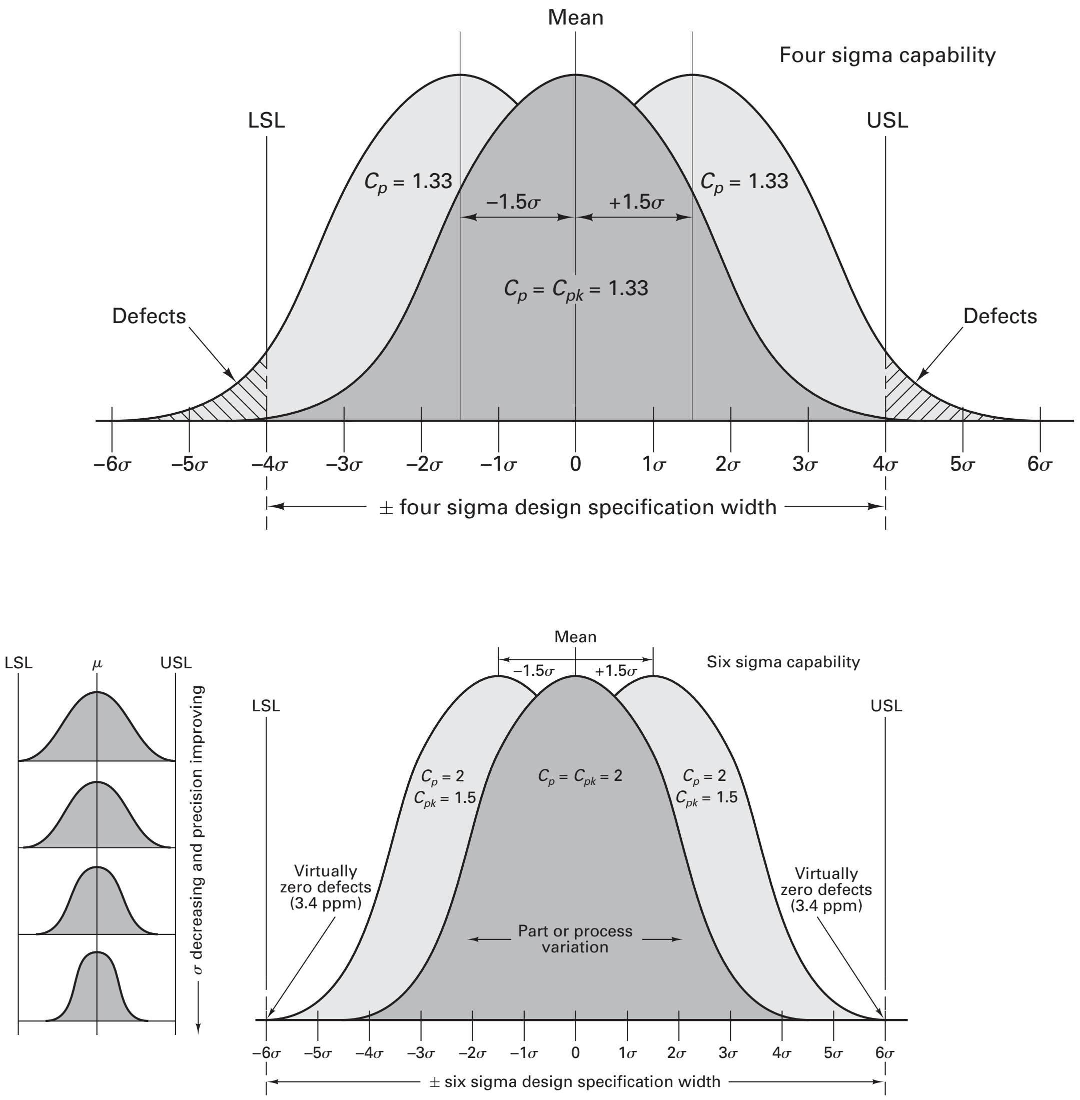

FIGURE 36-19 To move to six sigma capability from four sigma capability requires that the process capability (variability) be greatly improved (σ reduced). The curves in these figures represent histograms or curves fitted to histograms.

in their processes. This is probably because many manufacturing (mechanical) engineers have not had any coursework in this area.

Also, a change in company culture is often needed to give the responsibility for quality to the worker, along with the authority to stop the process when something goes wrong. An attitude of defect prevention and a habit of constant improvement of quality are fundamental to lean production, a system developed by Toyota. They have accomplished TQC (they call it company-wide quality control) by extensive education of the workers, giving them the analysis tools they need (control charts with cause-and-effect diagrams) to find and expose the problems. Workers are encouraged to correct their own errors, and 100% inspection (often done automatically) is the rule. Passing defective products on to the next process is not allowed. The goal is perfection. *Quality circles*, now popular in the United States, are just one of the methods used by Japanese industries to achieve perfection.

LINE STOP IN LEAN PRODUCTION

A pair of yellow and red lights hanging above the workers on the assembly line can be used to alert everyone in the area to the status of the processes. Many companies use Andon boards, which hang above the aisles. The number on the board reflects stations

TABLE 36-1 Total Quality Control: Concepts and Categories

TQC Category	TQC Concept
1. Organization	• Manufacturing engineering has responsibility for quality—quality circles
2. Goals	• Habit of improvement for everyone everywhere in the manufacturing
	• system
	• Perfection—zero defects—not a program, a goal
3. Basic principles	• Process control—defect prevention, not detection
	• Easy-to-see, quality—quality on display so customers can see and inspect processes—easy to understand quality
	• Insist on compliance with maintenance
	• Line stops when something goes wrong
	• Correct your own errors
	100% check in manufacturing and subassembly cells.
4. Facilitating concepts	• QC department acts as facilitator
	Audit suppliers
	Help in quality improvement projects
	Training workers, supervisors, suppliers
	• Small lot sizes through rapid changeover
	• Housekeeping
	• Less-than-full-capacity scheduling
	• Total preventive maintenance (TPM)
	• 8-4-8-4 two-shift scheduling
5. Techniques and aids	• Remove some inventory, expose problems, solve problems
	• Defect prevention, poka-yokes for checking 100% of parts
	• $n = 2$, for checking first and last item in lot (or $n = 3$, for large lots)
	• Analysis tools
	Cause-and-effect diagrams
	Histograms, and run charts, check sheets
	Control charts, ($\overline{X}$, R, σ)
	Scatter diagrams
	Pareto charts
	Process flow charts
	Taguchi and DOE methods

Source: Richard Schoenberger, 1983. Japanese Manufacturing Techniques.

on the line. A worker can turn on a yellow light when assistance is needed, and nearby workers will move to assist the worker having a problem. The line keeps moving, however, until the product reaches the end of the station. Only then is a red light turned on if the problem cannot be solved quickly and the line needs to be stopped. When the problem is solved and everyone is ready to go again, the red light goes off and everyone starts back to work, all in synch.

Every worker should be given the authority to stop the production line to correct quality problems. In systems using poka-yoke or automation, devices may stop the line automatically. The assembly line or manufacturing cell should be stopped immediately and started again only when the necessary corrections have been made. Although stopping the line takes time and money, it is advantageous in the long run. Problems can be found immediately, and the workers have more incentive to be attentive because they do not want to be responsible for stopping the line.

IMPLEMENTING QUALITY COMPANYWIDE

The basic idea of integration is to shift functions that were formerly done in the staff organization (called the production system) into the manufacturing system. What happens to the quality control department? The department serves as the facilitator and therefore acts to promote quality concepts throughout the plant. In addition, its staff educates and trains the workers in statistical and process control techniques and provides engineering assistance on visual and automatic inspection installations. Its most important functions will be training the entire company in quality control.

Another important function of the QC department will be to work with and audit the vendors. The vendor's quality must be raised to the level at which the buyer does not need to inspect incoming material, parts, or subassemblies. The vendor simply becomes an extension of the buyer's plant. Ultimately, each vendor will deliver to the plant perfect materials that need no incoming inspection. Note that this means the acceptable quality level (AQL) of incoming material is 0%. Perfection is the goal. For many years this country has lived with the unwritten rule that 2 or 3% defective was about as good as you could get: better quality just costs too much. For the mass-production systems, this was true. To achieve the kinds of quality that Toyota and many others have achieved, a company has to eliminate the job shop (a functional manufacturing system) and restructure the production system, integrating the quality function directly into the linked-cell manufacturing system, L-CMS.

The quality control department also performs complex or technical inspections, total performance checks (often called end item inspection), chemical analysis, nondestructive testing, X-ray analysis, destructive tests, and tests of long duration.

MAKING QUALITY VISIBLE

Visual display on quality should be placed throughout manufacturing facilities to make quality evident. These displays tell workers, managers, customers, and outside visitors what quality factors are being measured, what the current quality improvement projects are, and who has won awards for quality. Examples of visible quality are signs showing quality improvements, framed quality awards presented to or by the company, and displays of high-precision measuring equipment.

These displays have several benefits. When customers visit a plant to inspect processes, they want to see measurable standards of quality. Highly visible indicators of quality such as control charts and displays should be posted in every department. Everyone is informed on current quality goals and the progress being made. Displays and quality awards are also an effective way to show the workforce that the company is serious about quality.

SOURCE, SELF, AND SUCCESSFUL CHECKS AND POKA-YOKES

Many companies have developed an extensive QC program based on having many inspections. However, inspections can only find defects, not prevent them. Adding more inspectors and inspections merely uncovers more defects but does little to prevent them. Clearly, the least costly system is one that produces no defects. But is this possible? Yes, it can be accomplished through methods such as self and source inspection where quality control is in the hands of the operators.

Many people do not believe that the goal of zero defects is possible to reach, but many companies have achieved this goal or have reduced their defect level to virtually zero using techniques such as poka-yokes and source inspection. When you are inspecting to find defects, the components are compared with standards and defective items are removed. Sampling inspection is used when 100% inspection is not an option, but this assumes that defects are inevitable and that more rigorous inspection can reduce defects.

The truth is, to reduce the defects within a process, it must be recognized that defects are generated by the process itself and that most inspection techniques merely discover defects that already exist.

To achieve zero defects, a lean manufacturing concept must be developed where all operators are responsible for quality. You perform the following kinds of inspections:

- Successive checks, where the next operator checks the work of the previous worker
- Self-checks, where the operator checks his own work before passing it on
- Source inspection, where preventive action takes place at the error stage, to prevent errors from turning into defects

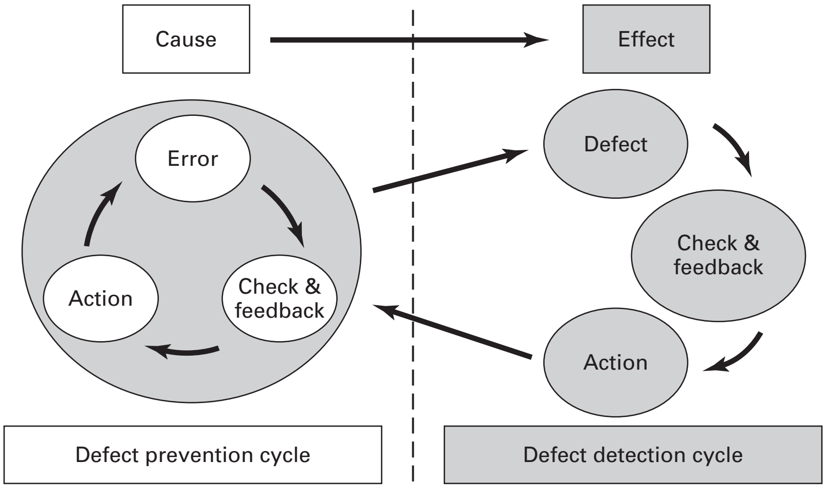

FIGURE 36-20 Source inspection involves defect prevention; that is, preventing errors from turning into defects. *(Source:* Achieving Zero Defects Mistake-Proofing—The Zero Quality Control System, *© 1999, Productivity, Inc. All rights reserved.)*

Source inspection (see Figure 36-20) involves rethinking the inspection part of the manufacturing process. First off, although it is necessary to have efficient inspection operations, they add little value in the product. Even the most efficient inspection operations are merely efficient forms of non-value-adding activity. Inspection plays a passive role in manufacturing and cannot by itself reduce defects.

Defects and *errors* are not the same thing in manufacturing. Errors can cause defects. For example, not setting the oven temperature correctly can burn the roast (too high) or cause it to be undercooked (too low). Incorrectly loading the original into the fax machine (the error) results in sending blank pages (the defect). When you discover the effect, you make corrections, but you have already spent the money to produce the defect. Table 36-2 outlines some common errors associated with manufacturing.

So *source inspection* looks for errors before they become defects. These techniques either stop the system to make corrections or automatically compensate or correct for the error condition to prevent a defective item from being made.

There are two ways to look at source inspections: vertically and horizontally. Vertical source inspections try to control upstream processes that can be the source or the cause of defects downstream. It is always necessary to examine source processes because they may have a much greater impact on quality than the processes being examined. Finding the source of a problem requires asking "Why?" at every opportunity. Here is an example.

Some steel bars were being cylindrically ground. After grinding, about 10% of the bars warped (bent longitudinally) and were rejected. The grinding process was studied extensively, and no sure solution was found. Looking upstream, a problem with the heat-treating process that preceded cylindrical grinding was detected. About 10% of the bars were not getting a complete, uniform heating prior to quench. Asking "Why?", it was found that these bars were always lying close to the door of the oven, and it was found that the door was not properly sealed, which resulted in a temperature gradient inside. Quenching of the bars induced a residual stress that was released by the grinding

TABLE 36-2 Common Errors That Can Produce Defects but Are Preventable

- Omissions in processing steps
- Errors in setting up the job in the machine
- Omission in the assembly process (missing parts)
- Inclusion of incorrect part
- Size errors due to wrong measurement
- Errors due to adjustments
- Errors in cutting-tool geometry or cutting-tool setting
- Errors in processing components (heat treating)

and caused the warping. Asking "Why?" at every opportunity uncovered the source of the problem.

Horizontal source inspections detect defect sources within the processes and then introduce corrections to keep from turning errors into defects. In metalcutting and forming, this is commonly called adaptive control (for preventing defects) or in-process quality control. One of the best ways to prevent errors from occurring is through the use of *poka-yokes*.

Poka-yoke is a Japanese word meaning "defect prevention." Poka-yoke devices and procedures are often devised mainly for preserving the safety of operations. The idea is to develop a method, mechanism, or device that will prevent the defect from occurring rather than to find the defect after it has occurred. Poka-yokes can be attached to machines to automatically check the products or parts in a process. Poka-yokes are source inspections that are usually attributes inspections. The production of a bad part is prevented by the device. Some devices may automatically shut down a machine if a defect is produced, preventing the production of an additional defective part. The poka-yoke system uses 100% inspection to guard against unavoidable human error.

Modern cars are equipped with many poka-yoke devices: you can't turn off the motor unless it is in park, you can't open a door while the car is moving, the headlights come on with the windshield wipers—all are devices to prevent you from making a mistake.

Such devices work very well when physical detection is needed, but many items can be checked only by sensory detection methods, such as the surface finish on a bearing race or the flatness of a glass plate. Variations in nonvisible conditions (air pressure, fluid velocity, temperature, electrical voltage, etc.) require detection devices where critical conditions are readily visible. For such problems a system of self-checks and successive checks can also be used.

TEAMS (AKA QUALITY CIRCLES)

Several popular programs are built upon the concept of participative management, such as quality circles, improvement teams, and task groups. These programs have been very successful in many companies but have failed miserably in others. The difference is often due to the way management implemented the program. Programs must be integrated and managed within the context of a lean manufacturing system design strategy. For example, asking an employee for a suggestion that management does not use (or cannot explain why it does not use) defeats a suggestion system. Management must learn to trust the employees' ideas and decisions and move the decision making to the factory floor.

A quality circle is usually a group of employees within the same department or factory floor area. Meetings are held to work on problems. An organization structure is usually composed of members, a team leader, a facilitator, a manufacturing engineer, and a steering committee.

Quality circles usually have the following main objectives: provide all workers with a chance to demonstrate their ideas; raise employee morale; and encourage and develop workers' knowledge, quality control techniques, and problem-solving methods. They also unify companywide QC activities, clarify managerial policies, and develop leadership and supervisory capabilities.

Quality circles have been implemented in U.S. companies with limited success when they are not part of a lean manufacturing strategy. It is possible for quality circles to work in the United States, but they must be encouraged and supported by management. Everyone must be taught the importance and benefits of integrated quality control.

SUPERIOR QUALITY IN MANUFACTURING/ASSEMBLY CELLS

In lean manufacturing subassembly and manufacturing cells, the cells are designed for a "make one–check one–move one on" (MO-CO-MOO) strategy. The part receives successive checks after each processing or assembly step. For *successive checks* to be successful, several rules should be followed. All the possible variables and attributes should not be measured, because this would eventually lead to errors and confusion in the inspection process. The part should be analyzed so that only one or two points are inspected after each step in the process. This is the heart of MO-CO-MOO. Only the most important elements just produced are inspected.

Another important rule is that the immediate feedback of a defect leads to immediate action. Since the parts are produced in an integrated manufacturing system, this will be very effective in preventing the production of more defective parts. Suppose the cell has only one or two workers and they are not in a position to directly check each other's work after each step. Here is where the decouplers can play an active role by providing automatic successive checking of the parts' critical features before proceeding to the next step. Only perfect parts are pulled from one process to the next through the decoupler.

In assembly lines, a worker may inspect each part immediately after producing it. This is called *self-checking*. There is an immediate feedback to the worker on quality. However, it would be difficult for many workers not to allow a certain degree of bias to creep into their inspection, whether they were aware of it or not, since they are inspecting their own work. Within cells operated by multiple workers, the operator of the downstream station or process can inspect the parts produced by the upstream operator. If there is a problem with the parts, the defective item is immediately passed back to the worker at the previous station. There the defect is verified and the problem corrected. Action is immediately taken to prevent any more defective parts. While this is going on, the line is shut down.

■ 36.6 SUMMARY

The designer of the product must have quality in mind during the quality design phase, seeking the least costly means to ensure the quality of the desired functional characteristics. Major factors that can be handled during the early stages of the product design cycle include temperature, humidity, power variations, and deterioration of materials and tools. Compensation for these factors is difficult or even impossible to implement after the product is in production. The distinction between superior- and poor-quality products can be seen in their variability in the face of internal and external causes. This is where Taguchi parameter design methods can be important.

The secret to successful process control is putting the control of quality in the hands of the workers. Many companies in this country are currently engaged in SQC (statistical quality control), but they are still inspecting to *find* defects. The number of defects will not be reduced merely by making the inspection stage better or faster or automated. You are simply more efficient at discovering defects. The trick is to *inspect* to *prevent* defects. How can this be done? Here are the basic ideas: Use source inspection techniques that control quality at the stage where defects originate. Use 100% inspection with immediate feedback rather than sampling. Make every worker an inspector. Minimize the time it takes to carry out corrective action. Remember that people are human and not infallible. Methods and devices can be developed to prevent them from making errors. Can you think of such a device? Does your car have a procedure that prevents you from locking the ignition keys inside the car? That is a poka-yoke.

Do not simply rely on inspection to control quality. Sorting to find defects by inspection is bad because you already paid to produce those defects.

Process improvement should drive toward defect prevention. In order to achieve the highest levels in quality, you have to implement a manufacturing system design (MSD) that has the highest objective (zero defects) built into (integrated into) the MSD.

Concentrate on making processes efficient, not simply on making the operators and operations more proficient. Continuous improvement requires that you redesign the manufacturing system continuously, reducing the time required for products to move through the system (i.e., the throughput time). This approach seems to be the American stumbling block. Industrial engineers can do operations improvement work such as buying a better machine or improving the ergonomics of a task. However, they need to do more systems improvement work. Too often fancy, complex, computerized solutions are devised to solve complex manufacturing process problems. Why not simplify the manufacturing system so that the need for complex solutions disappears?

Key Words

accuracy
control chart
control limits
fishbone diagram
histogram
nominal
parent population
poka-yoke
precision
process capability (PC)
quality control (QC)
range (R)
sample mean ($\overline{X}$)
sample size (n)
self-checking
source inspection
specification limit
standard deviation (σ)
statistical process control (SPC)
Taguchi methods
total quality control (TQC)
variability

Review Questions

1. Define a process capability study in terms of accuracy or precision.
2. What does the *nature of the process* refer to?
3. Suppose you have a "pistol-shooting" process that is accurate and precise. What might the target look like if, occasionally while shooting, a sharp gust of wind blew left to right?
4. What are the steps required to making a PC study of a process?
5. Why don't standard tables exist detailing the natural variability of a given process, such as rolling, extruding, or turning?
6. What are Taguchi or factorial experiments, and how might they be used to do a process capability study?
7. How does the Taguchi approach differ from the standard experimental method outlined in this chapter?
8. Why are Taguchi experiments so important compared to classical DOE-type experiments?
9. Here are some common, everyday processes with which you are familiar. What variable or aspect to the process might dominate the process in terms of quality, not output?
   a. Baking a cake (from scratch) or grilling a steak
   b. Mowing the lawn
   c. Washing dishes in a dishwasher
10. Explain why the diameter measurements for holes produced by the process of drilling could have a skewed rather than a normal distribution.
11. Name some common manufactured items that may receive the following:
    a. 100% inspection
    b. No final inspection
    c. Some final inspection, that is, sampling
12. What are common reasons for sampling inspection rather than 100% inspection?
13. Fill in this table with one of the four following statements: no error—the process is good; no error—the process is bad; type I or alpha error; type II or beta error.

		In reality, if we looked at everything the process made, we would know that it had:	
		changed	not changed
The sample suggested that the process had:	changed		
	not changed		

14. Explain why, when we sample, we cannot avoid making type I and type II errors?
15. Which type of error can lead to legal action from the consumer for a defective product that caused bodily injury?
16. Define and explain the difference between each of these:
    a. σ and $\sigma_{\overline{X}}$
    b. σ and $\overline{\sigma}$
    c. $\sigma_{\overline{X}}$, σ_R, and σ_σ
17. What is C_p, and why is a value of 0.80 not good? How about a value of 1.00? 1.3?
18. The designer of a component usually sets the nominal and tolerance values when designing the part. How do these decisions affect the decisions of the manufacturing engineer (MfE)?
19. What are some of the alternatives available to you when you have the situation where $6\sigma > \text{USL} - \text{LSL}$?
20. C_{pk} is also a process capability index. How does it differ from C_p?
21. In a sigma chart, are values for the samples normally distributed about $\overline{\sigma}$? Why or why not?
22. What is an assignable cause, and how is it different from a chance cause?
23. Why is the range used to measure variability when the standard deviation is really a better statistic?
24. How is the standard deviation of a distribution of sample means related to the standard deviation of the distribution from which the samples were drawn?
25. In the last two decades, the quality of automobiles has significantly improved. What do you think is the main cause for this marked quality improvement?
26. Figure 36-12 shows a bimodal check sheet indicating that the two operators performing an assembly task (in a cell) do the jobs at different rates. What would you recommend here?
27. Control charts use upper and lower control limits. Is a UCL the same as a USL?
28. In Figure 36-14, what are the USL and the LSL and why are they *not* shown on the charts?
29. What are four major branches (fishbones) on a cause-and-effect diagram?
30. How does variation in the measuring device (instrument) affect the measurements obtained on a component?
31. Explain what happed to improve the process in Figure 36-18.
32. In Table 36-1, explain these:
    a. MO-CO-MOO
    b. 8-4-8-4 scheduling
    c. $n = 2$ inspection
    d. Pareto chart
33. What is a quality circle, and how might you apply this concept to your college life?

■ Problems

1. For the items listed in the following chart, obtain a quantity of 48. Measure the indicated characteristics and determine the process mean and standard deviation. Use a sample size of 4, so that 12 samples are produced.

Item	Characteristic(s) You Can Measure
Flat washer	Weight, width, diameter of hole, outside diameter
Paper clip	Length, diameter of wire
Coin (penny, dime)	Diameter, thickness at point, weight
Your choice	Your choice

2. Perform a process capability study to determine the PC of the process that makes M&M candy. You will need to decide what characteristics you want to measure (weight, diameter, thickness, etc.), how you will measure it (use rule of 10), and what kind of M&Ms you want to inspect (how many bags of M&Ms you wish to sample). Take sample size of 4 ($n = 4$). Make a histogram of the individual data and estimate μ and σ as outlined in the chapter. If you decide to measure the weight characteristics, you can check your estimate of μ by weighing all the M&Ms together and dividing by the total number of M&Ms.
3. For the data given in Figure 36-4, compute the mean and standard deviation for the histogram and then C_p and C_{pk}, making any assumptions needed to perform the calculations.
4. For the data given in Figure 36-7, compute C_p and C_{pk}.
5. Calculate $\overline{\overline{X}}$ and $\overline{R}$ and the control limits for the $\overline{X}$ and R control charts shown in Figure 36-A. The sample mean, $\overline{X}$, and range, R, for the first few subgroups and the data for each sample are given in the bottom of the figure. There are 25 samples of size 4. Therefore $k = 25$, $n = 4$. Complete the bottom part of the table and then compute the control limits for both charts. Construct the charts plotting $\overline{\overline{X}}$ and $\overline{R}$ as solid lines and control limits as dashed lines, as shown in Figure 36-14. The first four data points have been plotted and the points

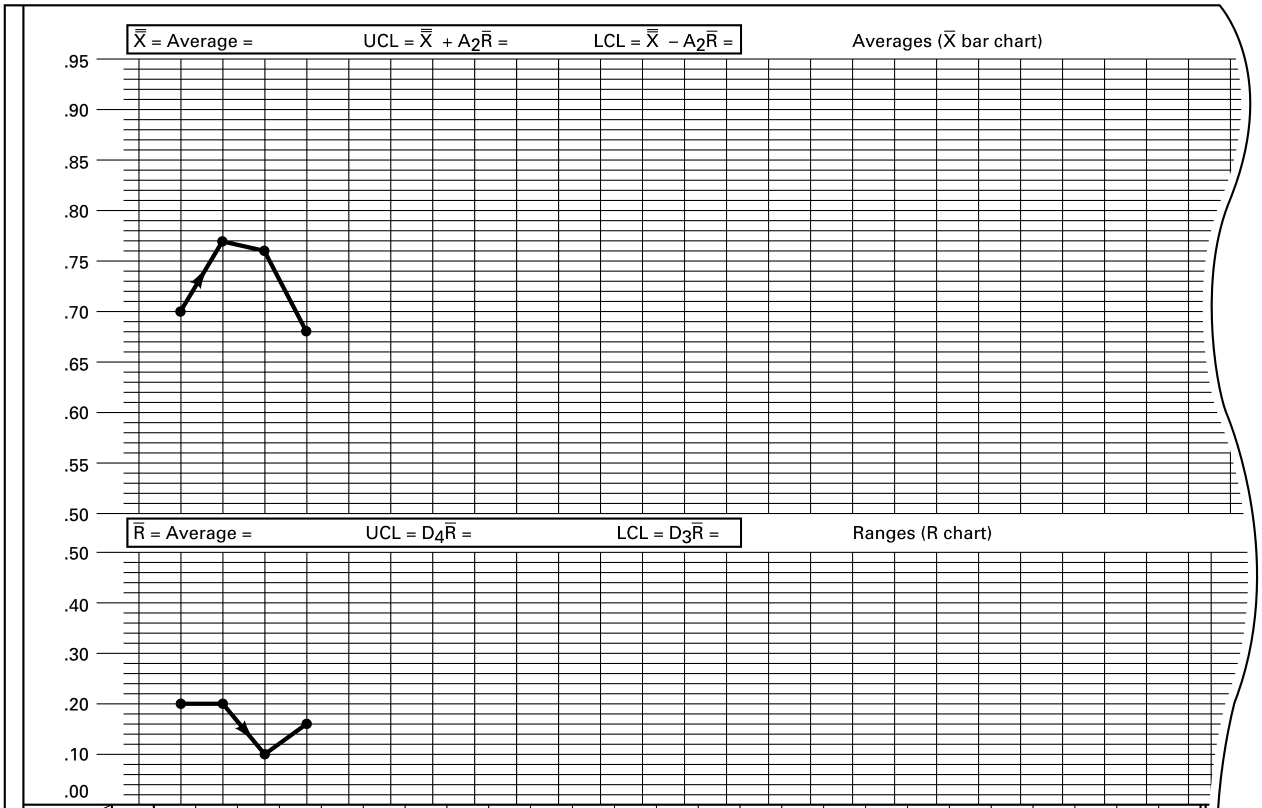

Date / Time	6/8				6/9 8	10	12	2	6/10 8	10	12	2	6/11 8	10	12	2	6/12 8	10	12	2	6/15 8	10	12	2	6/16 8
Readings 1	.65	.75	.75	.60	.70	.60	.75	.60	.65	.60	.80	.85	.70	.65	.90	.75	.75	.75	.65	.60	.50	.60	.80	.65	.65
2	.70	.85	.80	.70	.75	.75	.80	.70	.80	.70	.75	.75	.70	.70	.80	.80	.70	.70	.65	.60	.55	.80	.65	.60	.70
3	.65	.75	.80	.70	.65	.75	.65	.80	.85	.60	.90	.85	.75	.85	.80	.75	.85	.60	.85	.65	.65	.65	.75	.65	.70
4	.65	.85	.70	.75	.85	.85	.75	.75	.85	.80	.50	.65	.75	.75	.75	.80	.70	.70	.65	.60	.80	.65	.65	.60	.60
Sum	2.65	3.20	3.05	2.75																					
$\overline{X} = \frac{\text{Sum}}{\text{No. of readings}}$	.66	.80	.76	.69																					
R = Highest–Lowest	.05	.10	.10	.15	.20	.25	.15	.20																	

* For sample sizes of less than seven, there is no lower control limit for ranges.

For first subgroup:
Sum = .65 + .70 + .65 + .65 = 2.65
$\overline{X}$ = 2.65 ÷ 4 = .6625
R = .05

FIGURE 36-A

connected, but are they all correctly plotted? Replot any points that are incorrectly plotted. Plot the rest of the data on the charts and comment on your findings. (Use Figure 36-14 as a comparison.)

6. For the data given in Figure 36-A, estimate the mean and standard deviation for the process from which these samples were drawn (i.e., the parent population) and discuss the process capability in terms of C_p and C_{pk}. The USL and LSL for this dimension are 0.9 and 0.5, respectively, and the nominal is 0.7.
7. Figure 36-B contains data from a machining process that produces holes (drilling) with limits of 6.00 to 6.70 mm. The control charts for $\overline{X}$ and R using $n = 5$ and $k = 25$ are also shown in the figure. (*Note*: The numbers in the body of the table are 6.47, 6.19, 6.19, 6.29, etc.)
   1. Recheck the calculation of the mean values and the range values for the 25 samples and then check the calculations for $\overline{\overline{X}}$ and $\overline{R}$ and the control limits for the charts.
   2. Insert the centerlines for $\overline{\overline{X}}$ and $\overline{R}$ on the charts.
   3. Check the plotting of the points on the charts.
   4. Discuss the charts.
   5. Using the data to develop the process capability indexes and discuss the capability of this process.
   6. Using the data $n = 5$ and $k = 25$, develop the σ control chart and use σ to estimate σ for the process capability indexes and C_p and C_{pk}.
   7. Develop $\overline{X}$ and R charts for sample sizes of 4 (or 3) by ignoring X_5 (X_3 and X_5) or any combination of individual values. Use the charts to perform a process capability study. Did the findings change?

Product name	Cylinder	Samples	Sample size	3, 4 or 5	Period	1996, 10.15	$\overline{X}$ Control chart	R Chart
Quality characteristic	Hole diameter		Timing of taking samples	Daily		1975, 10.30	Center line $\overline{\overline{X}} = 6.299$	Center line $\overline{R} = 0.274$
Limits of allowable range	Max. 6.70 mm	Section		00 00	Person in charge	C. Black	$UCL_{\overline{X}} = \overline{\overline{X}} + \overline{A}_2\overline{R}$	UCL 2.11 × $\overline{R} = 0.578$
	Min. 6.00 mm	Measuring instrument serial number		103037	Person in charge of inspection	Pogi Bear	$LCL_{\overline{X}} = \overline{\overline{X}} - \overline{A}_2\overline{R}$	LCL = 0

	Lot No.	1	2	3	4	5	6	7	8	9	10	11	12	13	14	15	16	17	18	19	20	21	22	23	24	25	Total	Mean
Measured values	X_1	47	19	19	29	28	40	15	35	27	23	28	31	22	37	25	7	38	35	31	12	52	20	29	28	42		
	X_2	32	37	27	29	12	35	30	44	37	45	44	25	37	32	40	31	0	12	20	27	42	31	47	27	34		
	X_3	44	31	21	42	45	11	12	32	26	26	40	24	19	12	24	23	41	29	35	38	52	15	41	22	15		
	X_4	35	25	15	59	36	38	33	11	20	37	31	32	47	38	50	18	40	48	24	40	24	3	32	32	29		
	X_5	20	34	19	38	25	33	26	38	35	32	18	22	14	30	19	32	37	20	47	31	25	28	22	54	21		
	Total	178	146	101	197	146	157	116	160	145	163	161	134	139	149	158	111	156	144	157	148	195	97	171	163	141		
	Mean $\bar{x}$	35.6	29.2	20.2	39.4	29.2	31.4	23.2	32.0	29.0	32.6	32.2	26.8	27.8	29.8	31.6	22.2	31.2	28.8	31.4	29.6	39.0	19.4	34.2	32.6	28.2	746.6	29.86
	Range R	27	18	33	30	33	29	21	33	17	22	26	10	33	26	31	25	41	36	27	28	28	28	25	32	27	686	27.44

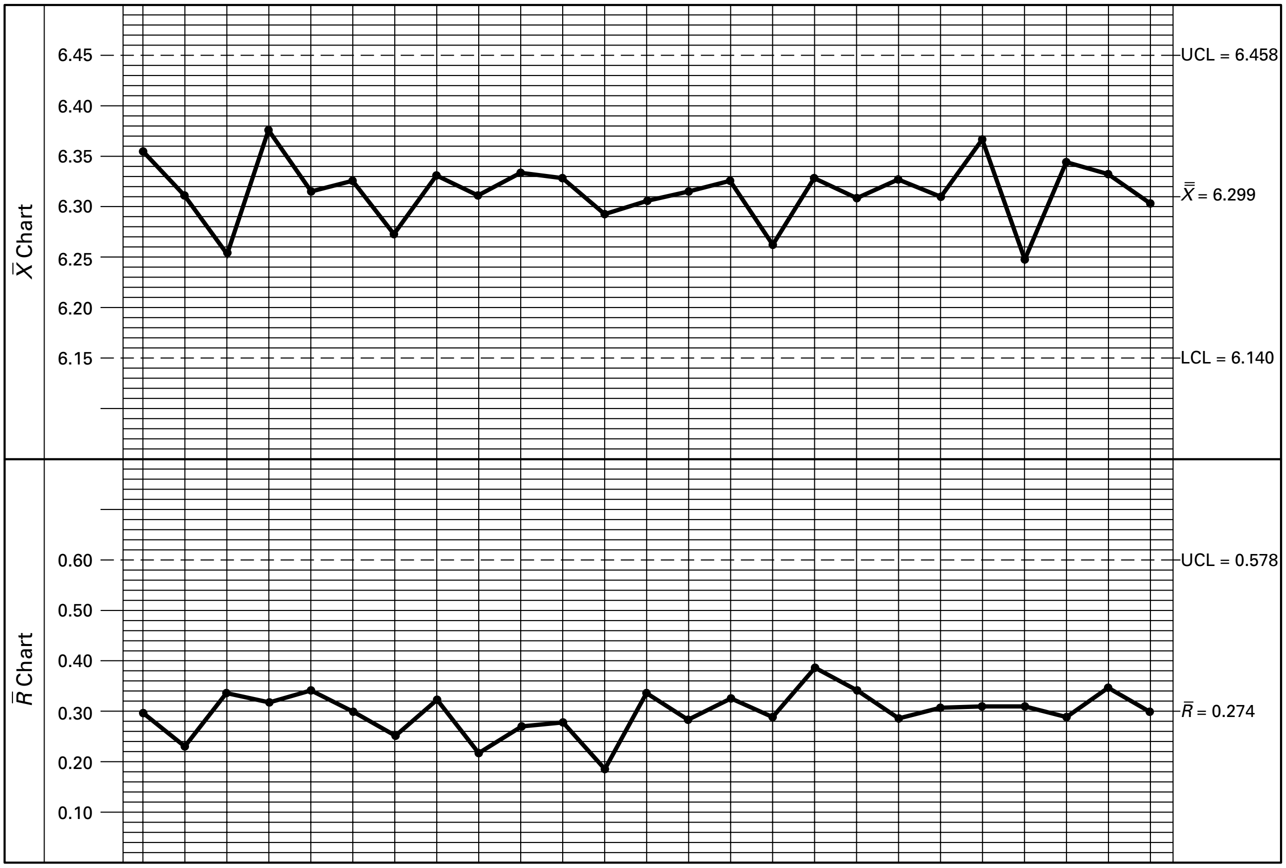

FIGURE 36-B

Chapter 36 CASE STUDY

Boring QC Chart Blunders

You have recently been hired by the Pippen Company as the 6 sigma Black Belt. Your new boss, Gabby Sorenson, has one of the leading textbooks in manufacturing engineering (NOT DeGarmo) and she shows you this problem. After reading the discussion and studying the figure, Gabby asked you the following questions.

1. What kind of control chart is this?
2. What do you estimate the standard deviation (a') of the parent population to be, assuming that the control limits on this chart are based on three sigma?
3. Is the dashed line in the figure labeled “mean” the mean or the average? (The mean is X and is equal to 0.00017.) What is the line really called?
4. From the information given in the discussion and in the figure, determine the values of C_p and C_{pk}.
5. What is the most glaring error in the figure (Hint: something one never does with control charts) and why is it so wrong?

Example: Maintaining accuracy in boring using control charts.

The workpiece shown in Figure CS 36 is made of gray cast iron and is bored to the tolerances indicated (5.5125/5.5115 in.).These parts were bored on a chucking machine. Each of the 19 points plotted on the vertical axis of the control chart represents the average of bore diameter measurements made on four parts (sample size). The horizontal broken lines at +0.0005 and 0.0005 represent upper and lower specified limits, respectively. The solid line X= 0.00017 in. is the estimate of the process capability based on a study of several samples bored on the machine. The upper and lower control limits are then calculated from X . We note that samples 4–9 show a definite trend toward undersized bored holes. If the operation had been continued without any changes, the successive bored holes very likely would have been out of tolerance. To avoid this situation (out of control), the boring tools were reset toward the upper control limit before parts in sample 10 and the rest were bored. *(Source: ASM International.)*

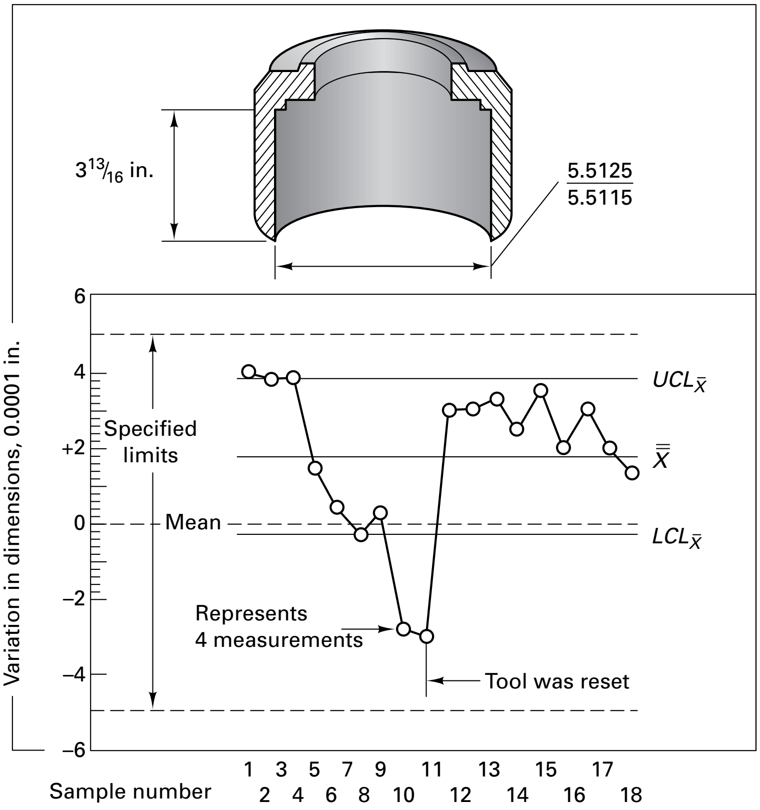

Figure CS 36

INDEX

FUNDAMENTAL MANUFACTURING PROCESSES DVD

John Wiley & Sons and the Society of Manufacturing Engineers are pleased to include a DVD based on the SME Fundamental Manufacturing Processes video series. The DVD highlights a number of the most important manufacturing processes. Each excerpt provides approximately five minutes of footage to help visualize the concepts discussed in this book. The topics covered are as follows:

MACHINING PROCESSES

1. Turning & Lathe Basics
2. Milling & Machining Center Basics
3. Basic Holemaking
4. Basics Of Grinding
5. Electrical Discharge Machining
6. Cutting Tool Materials

FORMING PROCESSES

7. Sheet Metal Shearing And Bending
8. Sheet Metal Stamping Dies & Processes
9. Casting
10. Die Casting
11. Powder Metallurgy
12. Forging

PLASTIC PROCESSES

13. Plastic Injection Molding
14. Plastic Blow Molding
15. Composite Materials & Manufacturing
16. Plastics Finishing Processes

ADDITIONAL PROCESSES

17. Introduction To Workholding
18. Computer Numerical Control
19. Measurement & Gaging
20. Gears & Gear Manufacturing
21. Heat Treating
22. Welding

The Fundamental Manufacturing Processes series features 35 full-length programs available on either DVD or VHS. For more information on the complete FTP series please visit the Society of Manufacturing Engineers at www.SME.org/videos/.

WILEY

Society of
Manufacturing
Engineers

www.wiley.com/college/

www.sme.org/videos/

Acronyms

AC	Adaptive Control
AFM	Abrasive Flow Machining
AGVS	Automated Guided Vehicle System
AI	Artificial Intelligence
APT	Automatic Programming of Tools
AQL	Acceptable Quality Limit (or Level)
ASCII	American Standard Code
AS/RS	Automatic Storage/Retrieval System
ATE	Automatic Test Equipment
AWJM	Abrasive Water Jet Machining
BASIC	Beginner's All-Purpose Symbolic Instruction Code
BTRI	Behind the Tape Reader Interface
CAD	Computer-Aided Design
CAD/CAM	Computer-Aided Design/Computer-Aided Manufacturing
CAD/D	Computer-Aided Drafting and Design
CAE	Computer-Aided Engineering
CAM	Computer-Aided Manufacturing
CAPP	Computer-Aided Process Planning
CATI	Computer-Aided Testing and Inspection
CDC	Cutter Diameter Compensation
CHM	Chemical Machining
CIM	Computer-Integrated Manufacturing
CL	Center Line
CMM	Coordinate Measuring Machine
CMS	Cellular Manufacturing System
CNC	Computer Numerical Control
COBOL	Common Business Oriented Language
CPR	Capacity Resources Planning
CPU	Central Processing Unit *(Computer)*
CRT	Cathode Ray Tube
CVD	Chemical Vapor Deposition
DBM	Data-Base Management
DDAS	Direct Data Acquisition System
DDC	Direct Digital Control
DNC	Digital (or Direct or Distributed) Numerical Control
DOS	Disk Operating System
DP	Diametrical Pitch
DPRO	Digital Position Readout
DRO	Digital Readout
EAROM	Electrically-Alterable Read-Only Memory
EBCDIC	Extended Binary Coded Decimal Interchange Code
EBM	Electron Beam Machining *(EBW = Welding) (EBC = Cutting)*
ECM	Electrochemical Machining
EDM	Electrodischarge Machining *(EDG = Grinding)*
EMI	Electromagnetic Interface
EOB	End of Block
EOP	End of Program (workpiece)
EOT	End of Tape
EROM	Eraseable Read-Only Memory
ESW	Electroslag Welding
FCAW	Flux Cored Arc Welding
FEM	Finite-Element Method
FMC	Flexible Manufacturing Cell
FMS	Flexible Manufacturing System
FORTRAN	Formula Translation
FRN	Feed Rate Number
GMAW	Gas Metal Arc Welding
GT	Group Technology
GTAW	Gas Tungsten Arc Welding
HAZ	Heat Affected Zone
HERF	High Energy Rate Forming

HGVS	Human-Guided Vehicle System *(fork-lift with driver)*
HIP	Hot Isostatic Pressing
IGES	Initial Graphics Exchange System
IMPSs	Integrated Manufacturing Production Systems
I/O	Input/Output
IOCS	Input/Output Control System
JIT	Just-In-Time
LAN	Local Area Network
LASER	Light Amplification by Stimulated Emission of Radiation
LBM	Laser Beam Machining *(LBW = Welding) (LBC = Cutting)*
L-CMS	Linked-Cell Manufacturing System
LED	Light Emitting Diode
LP	Lean Production
LSI	Large Scale Integration
MAP	Manufacturing Automation Protocol
MCU	Machine Control Unit
MDI	Manual Data Input
MIG	Metal–Inert Gas
MPS	Manufacturing Production System
mrp	Material Requirements Planning
MRPII	Manufacturing Resources Planning
MSD	Manufacturing System Design
NC	Numerically Control
NDT	NonDestructive Testing *(NDE = Evaluation) (NDI = Inspection)*
OCR	Optical Character Recognition
OM	Orthogonal Machining
OPM	Orthogonal Plate Machining
OS	Operating System
OTT	Orthogonal Tube Turning
PAW	Plasma Arc Welding *(PAC = Cutting) (PAM = Machining)*
PCB	Printed Circuit Board
PD	Pitch Diameter
PDES	Product Design Exchange Specification
PLC	Programmable Logic Controller
POK	Production Ordering Kanban
PROM	Programmable Read-Only Memory
PS	Production System
P/M	Powder Metallurgy
PVD	Physical Vapor Deposition
QC	Quality Control
QMS	Quality Management System
RAM	Random Access Memory
RIM	Reaction Injection Molding
ROM	Read-Only Memory
SAW	Submerged Arc Welding
SCA	Single Cycle Automatic
SMAW	Shielded Metal Arc Welding
SPC	Statistical Process Control
SPF	Single Piece Flow
SQC	Statistical Quality Control
TCM	Thermochemical Machining
TIR	Total Indicator Readout
TPS	Toyota Production System
TQC	Total Quality Control
USM	Ultrasonic Machining *(USW = Welding)*
VA	Value Analysis
WAN	Wide Area Network
WIP	Work-In-Progress (or Process)
WJM	Water Jet Machining
WLK	Withdrawl Kanban
YAG	Yttrium-Aluminum Garnet

Solutions Manual to Accompany

MATERIALS AND PROCESS IN MANUFACTURING

Ninth Edition

E. Paul DeGarmo
J T. Black
Ronald A. Kohser

Solutions Manual by
Barney E. Klamecki

WILEY

Contents

Preface

This version of the textbook contains significant new content and, so then, does the Solution Manual. These notes are provided to explain some aspects of the new content.

The authors of the textbook prepared the new content for the book, including all new questions and problems. I prepared only the answers to the new questions and solutions for the new problems.

Many of the questions are broad, open-ended and raise real, practical concerns. The answers that I have prepared are intended to directly address the important concepts raised and provide some of the thought process leading to the answers. Where example applications of the concepts are provided these are intended to be starting points for consideration and discussion, not final, definite or unique answers.

Some internet web sites are suggested as example sites containing useful information. These are only suggestions as typical starting points for more in-depth investigation of the questions raised. I am always hesitant to refer to internet web sites since often the updating of them, and sometimes their continued existence, is problematic. Perhaps the best way to view the inclusion of a web site in the Solution Manual is as an indication of questions that are more open-ended and may require more material than is in the text for preparing answers.

For the new quantitative problems and some of the problems from previous editions of the text I have used spreadsheets to produce solutions. The intent is to provide the opportunity for users of the text to customize these problems. Problem variables and variable values can be changes with little effort. The difficulty is that to provide this capability specific software must be used since writing code that can be used on most computers is not warranted. Microsoft Excel 97 was used. In any case, the solutions are also provided in fixed form.

Some question answers were put in the form of tables so that it is possible to slightly manipulate the questions. For example, various table cells can be cleared and fill-in-the-blank questions formulated. Microsoft Word 97 was used for the Solution Manual text.

Barney E. Klamecki
March, 2003

CHAPTER 1
Introduction to Materials and Processes in Manufacturing

Review Questions

1. The availability and cost of manufactured products are an important part of our cost of living and the real wealth of the nation. Thus, reducing the cost of producer and consumer goods improves the productivity while holding down inflation, thereby improving the general standard of living.

2. This is true if you consider that everyone who used the output from a process, including all the intermediate steps, is a customer. The operator of the next process is the user and customer of the proceeding process. In fact, some companies identify two customers, the external customer who buys the finished product and the internal customer, who builds the product one - i.e., the people who work in the manufacturing system. See Chapter 43

3. Job shop - an injection mold manufacturing shop, the shop at a large university that produces research equipment and apparatus. Job shops are capable of producing products with great variety, typically employing highly skilled workers.
Flow shop – automobile assembly. Flow shops are usually laid out so that specific products pass through a series of operations with no backflow. The product range is limited, production volume is large and labor skill is lower than in job shops.
Project shop – diesel-electric locomotive production facility. The end product is very large and so many machines, tools and people come to the product to produce it at a relatively fixed location.

4. In the context of manufacturing, a manufacturing system is a collection of men, machine tools, and material-moving systems, collected together to accomplish specific manufacturing or fabrication sequences, resulting in components or end products. The manufacturing system is backed up by and supported by the production system, which includes functions like control of quality, inventory, production, and manpower, as well as scheduling, planning and the like. Within the manufacturing system, there will be machine tools, which can perform jobs or

5. No. The cutting tool is the implement that does the cutting. It contains the cutting edge and is used in the machine tool. The machine tool drives the cutting tool through the work material.

6. The basic manufacturing processes are: casting or molding, forming, (heat) treating, metal removal, finishing, assembling, and inspection.

7. By casting, the desired shaped in final or near-final form, could be obtained. This greatly reduces the necessity for machining the hard-to-machine metal. Less machining

is needed when the raw material shape is close to the finished part size and shape (called near net shape casting).

8. The foam is melted and vaporized and so moves into the atmosphere around the process.

9. The cavity in the die that the work material is deformed into when the die is pressed into the workpiece. Material on the workpiece moving into the cavity, “concave,” of the die results in the raised, “convex,” part of the medal surface.

10. Trains stop at the station to load and unload people and materials. In an assembly line, products stop at the job station to take on materials or have operations performed on them.

11. False. Storage is very expensive because time costs the company money. It is expensive to keep track of stored materials, to put them into storage, to get them back from storage, to damage them as a result of excessive handling, and so on. More importantly, storage usually adds no value - very few items appreciate on the shelf.

12. For the simple, conventional paper clip, wire is cut to length and then formed in three bending operations.

13. The university is an example of a service job shop and shows that value can be added by service processes and operations --the student enters engineering worth the minimum wage and graduates worth $15 to $20/hour. In the university job shop, the professors are the machine tool operators, the students are the workpieces, courses are the processes, tests are the inspections, books are the tooling, and department heads are the foremen.

14. Inefficient is a relative term here. If we can eliminate machining, we can save the time and the money. Machining processes are generally those which give the part its final size, shape, and surface finish and add value to the part. Because they do not produce the shape and size in bulk, but rather by localized action they may not be as efficient as forming and casting processes.

15. For the following set of data estimated from Figure 1-1

Year	**Speed**
1800	40
1850	70
1900	110
1915	150
1940	250
1965	700
1980	1200
2000	1650

fitting the data, shown as diamonds, to polynomial, power and exponential forms gives

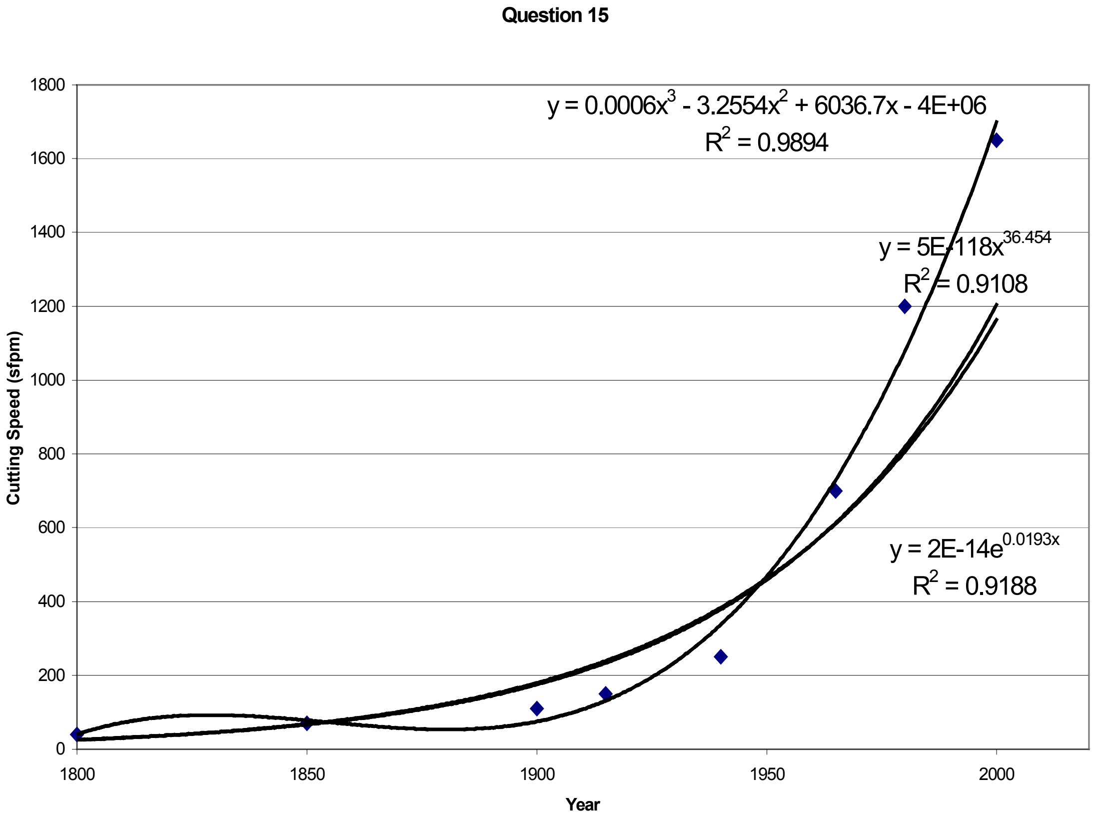

The coefficients in the equations have little meaning since equations are a fit of cutting speed to years. The form of the equations shows a rapid rise, and an "exponential growth" conveys this idea.

16. The cost to manufacture a typical manufactured product is 20% - 30% of the selling price. For the mass produced product at the lower end of this range the manufacturing cost is \$0.20. These 20 cents includes material and processing costs. Processing includes assembly in addition to producing the components. Since the blade cost involves forming the edge in a material it is probably the highest cost part of the razor.

So, with 20 cents to cover materials, processing and assembly, and the blade the most expensive individual part an estimate of 2-3 cents is reasonable for the production of the high precision (in terms of edge) blade.

The same kind of reasoning can be used with manufacturing cost being 40% of selling cost as suggested in Problems 1 and 2.

17. Packaging is used to protest the product from the environment, to protect the product during shipping and to hold fixed numbers of products for sale.

18. Assembly of a binder type paper clip involves putting the formed wire handles in to the spring steel binder part of the clip. Assembly of bicycle wheels involves putting spokes into the wheel and hub.

If the ingredients of the club sandwich are all in their finished state then they can be assembled. If processing is necessary as in slicing meats and tomatoes and toasting bread, then the entire process is more than just assembly.

House building is usually considered construction as large parts of the effort involve manufacture of elements of the house – before they are assembled. For example, foundations are poured and let solidify before the sills for the walls are assembled to them. Houses that are simple in design and composed of large elements that are manufactured in factories can be viewed as assembly on-site. For example, assembly of entire wall sections and trusses to support roofs.

19. The physical elements of a manufacturing system are the machines, tools and inspection equipment used to produce the product. They are characterized by having measurable parameters. For example machine tools are characterized by the size of the workpiece that can be processed, in addition to a large number of other characteristics. Tools are described by their shape. Measuring and inspection instruments have measurement resolution limits. Measurable parameters extend past machine specifications to higher level (involving more than one aspect of part production) descriptions of the process such as production rates. The manufacturing system is more than the physical elements. Support and control systems, along with the physical elements, are combined in the manufacturing system.

20. The manufacturing engineer is responsible for selecting or designing and overseeing operation of the manufacturing processes. In the sense of immediate contact with processes the manufacturing engineer is often the center of "making the product." However, the decisions made by part and product designers and materials engineers have large influences on the kind of processes that can be used to make the part. How the part can be made is constrained by part design and materials used. So, all individuals who make decisions that determine manufacturing process choice should be involved in figuring out how to make the part.

21. Three general kinds of information are missing from Figure 1-6 that are contained in Figure 1-8.
1. The number and activities of the workers,
2. The measurable parameters that can be used to evaluate the operation,
3. The general view that the system in Figure 1-8 is designed for a certain product and so is more specific in design and operation than the manufacturing job shop shown in Figure 1-6.

22. This is really a discussion question to get the students to be aware of all the things involved in characterizing a process technology. The extrusion process results when the pressure applied to a material exceeds its flow strength. Sufficient energy must be applied to overcome friction, so lubrication is very important. The tooling is generally very expensive. A single die may cost $5000 and setup time can be long. The process usually produces 10 to 25 surface feet per minute of material. The critical process parameters are temperature and pressure, the material being extruded, lubrication, and extrusion rate. Some metals cannot be extruded very well. The process is constrained by

the power available and the size of the billets --i.e. the standard process is not continuous. The process operates reliably but users should always be aware of the high pressures involved in upsetting the materials. Operator skills are not critical and the process is semiautomatic. The process can do a wide variety of parts, depending only on the die design. It is hard to do hollow extrusions. Extrusion as a process is typically good to a tolerance of about 0.001 or 0.002 inches.

23. The emphasis of the question is on assembly and so can be answered relatively simply since assembly means interconnecting finished products or subassemblies. That is, automobile assembly is a series of steps in which the chassis/frame is populated with an engine, drive train, wheels/tires, seats, body panels, windows, etc. This is in contrast to manufacturing of parts such as engine blocks, crankshafts, pistons, camshafts, etc. that are then assembled into an engine, that is then used in assembling the automobile.

24. Production planning is deciding what should be done and how it should be done, what machines should be used, in what sequences, to make a part, and how these machines should be tooled, set-up, and operated. Scheduling is deciding when the production should take place, and therefore, when parts and products should be completed and ready for sale. Without these kinds of critical functions in the production system, the manufacturing system would grind to an inefficient halt.

25. How would a bumper have to be redesigned to provide the equivalent strength? What other components would have to be redesigned? What additional or different processing equipment, including finishing equipment, would be needed? Would the aluminum bumper satisfy the safety requirements (5 mph crash test) needed by the car? What are the costs savings produced by this change?

26. It is almost impossible to fabricate a low-cost item that is poorly designed and do it in an economical way. It must be designed so that it is easy to produce if it is going to be inexpensive (i.e. it has producibility). Thus, this statement is true.

27. Operations like load and unload parts from the machine, change the machine over from one part design to another (this is called set up), and change the tooling in the machine all add no value.

28. The rolls produce many feet of sheet metal that end up in many cars, so the fixed costs (like the rolls) are spread out over many sheets (feet) of metal. Thus the cost of sheet metal per car may be 50 to 100 dollars before the metal is formed into fenders and door panels.

29. Insurance, health, entertainment, sporting events, transportation, lodging, banking, communications, education, etc. are examples of service industries -- anything bought or sold in trade that cannot be dropped on your foot. Service industries worry about productivity, quality, and economic output just as much as manufacturing industries.

30. Disassembling it adds costs and value - you want the cuts of meat, not the whole animal. You are adding value to the cow when you are raising it and feeding it, so it becomes more valuable in the market. You add cost, not value when you ship the cow to the market.

31. At different levels of specification detail, hot isostatic pressing is
- a unit manufacturing process,
- a hot working process,
- a material consolidation process,
- a powder material processing technique.

32. The selling price is determined by the marketplace and what the customer will pay. The best way to improve profit is to reduce manufacturing costs per unit. This can be difficult to do when the price keeps going up.

33. The manufacturing cost for an assembled product, e.g., a car, is made up of materials (raw materials, cutting tools, purchased parts and components and their storage and handling), direct labor, indirect labor (people who work in the manufacturing system but don't work directly on the product – the car), and energy and depreciation (machines and tooling).

34. A start point for answering the question is to consider the shape of different regions of the product, Figure 1-10, and the shapes that are produced by the machining processes, Figure 1-14.
Starting with a rough cylindrical workpiece that may have been produced in a drawing or rolling operation, an overview of the machining processes starting at the top of Figure 1-14 is,
- lathe turning to produce a cylindrical workpiece,
- center drilling of end,
- a facing operation on the end of the workpiece,
- lathe turning to produce diameters and flats,
- milling to produce slot and flats,
- drilling (and perhaps reaming) of holes.

35. Product lifecycle is composed of startup, rapid growth, maturation, commodity or decline.

36. Figure 1-15 shows lifecycle phases for an existing product and includes manufacturing cost and sales volume. Before the product exists design and development costs accrue and are not shown. With product in existence use, repair and disposal costs arise.

37. To use the concepts presented in Figure 1-17 the type of components and required production rates have to be specified.
Say, two 8-hour shifts and 250 working days per year, then

Production rate of 16,000 parts/year = (16,000 parts/year)(year/250 days)(day/16 hours) = 4 parts/hour.
The lower part of Figure 1-17 shows that for part variety of 10 and 4 parts per hour production rate there is significant overlap of the system possibilities of 1) flexible manufacturing system, 2)manned and 3) unmanned cells, 4) CNC equipped job shop.

Problems

1. Solution is provided in text and is/should be
% Direct labor = [(labor cost) / (manufacturing cost)] 100%
labor cost = (20 hours)($30/hour) = $600
manufacturing cost = assumed 40% of selling price = (0.40)($16,000) = $6,400
% Direct labor = (600 / 6400) 100% = 9.4%

Production rate = (150,000 vehicles/year)(year/300 days)(day/8 hours) = 62 trucks/hour

2. Redesign of stapler:

The redesign of an existing product can involve
- redesigning individual parts to perform better,
- eliminating parts,
-- by combining existing parts into a new part
-- by replacing part function such as replacing fasteners with snap fits
- changing material

One way to formulate a problem solution is to use a table to summarize the potential for redesign.

		Possible Design Change			
Part	Function	Combine	Eliminate	Material	New design
1					
2					
3					
…					

Case Study:

None

CHAPTER 2
Properties of Materials

Review Questions

1. Metallic materials typically possess the properties of luster, high thermal conductivity, high electrical conductivity, and ductility.

2. There are several classes of nonmetallic materials and more or less specifically defined examples can be given in these classes. For example,
Polymers or plastics – polyethylene, polypropylene, epoxy.
Ceramics – aluminum oxide, silicon nitride.
Amorphous materials – glass, borosilicate glass
Organic materials – wood, oak wood
Inorganic materials – stone, granite

3. Some common physical properties of metals include:
density or weight, melting point, optical properties (such as transparency, opaqueness or color), thermal properties (such as specific heat, coefficient of thermal expansion and thermal conductivity), electrical conductivity and magnetic properties .

4. The results of standard tests apply only to the specific test conditions that were employed. Since actual service conditions rarely duplicate the conditions of laboratory testing, caution should be employed.

5. The standard units for reporting stress in the English system is pounds per square inch (psi) , and in the metric system, it is megapascals (MPa). Being the ratio of one length to another length, strain is a dimensionless number. However, it is usually reported in terms of millimeter per meter, inch per inch, or strict percentage.

6. Modulus of elasticity is a material property that describes the elastic behavior of a material. It is useful for describing the elastic response of a material and quantities related to elastic behavior. Examples are the deflection of a material subjected to loading that does not cause plastic deformation and the resilience of a material.

Resilience is the energy absorbed by a material in the elastic range. For uniaxial tension it is the area under the elastic part of the stress-strain curve and so is $(1/2)\ \sigma_Y\ \varepsilon_Y$, with σ_Y and ε_Y being the yield stress and strain at yield. Using $\sigma_Y = E\ \varepsilon_Y$ shows that resilience depends on E.

7. The elastic-to-plastic transition can be designated in a variety of ways. If the transition is a distinct one, it is known as yield point, with the highest stress preceding the plastic strain being called the upper yield point, and the lower, "runout" value is the lower yield point. If the transition is not distinct, it is DEFINED through the concept of offset yield

strength, the value of the stress associated with a specified, but tolerable, amount of plastic strain.

8. The percent elongation at fracture in a tensile test can be used as a measure of ductility. Also, the percent reduction of cross sectional area can be used. These two quantities are not directly related to each other since the cross section area changes in an unknown way in the necked region of tensile specimens loaded to fracture.

9. In many cases, material "failure" is defined as the onset of localized deformation or necking. Since additional plastic deformation after necking would occur after "failure", it would be more appropriate to measure and report the uniform elongation (or the percent elongation prior to necking) .

10. Brittleness should not be equated with a lack of strength. Brittleness is simply the absence of significant plasticity. Many brittle materials, such as glass and ceramics can be used to impart significant strength to reinforced composites.

11. Toughness is defined as the work per unit volume required to fracture a material, and can be used as one measure of a material's ability to absorb energy or impacts without cracking or breaking. Plastic deformation occurs during the measurement of toughness, whereas resilience requires the material to remain elastic.

12. True stress considers the load as being supported by the actual area of the specimen and is a true indication of the internal pressures. Engineering stress is simply a normalizing of the load, dividing it by the original cross-sectional area of the specimen, i.e. dividing it by a constant. While easy to obtain, the engineering stress has little, if any, physical significance when the actual area is different from the original.

The true, natural, or logarithmic strain is calculated by taking the natural logarithm of the current length divided by the original length, which is the sum of all of the incremental changes in length divided by the instantaneous length. It has the attractive property of being additive, i.e. the sum of the incremental strains is equal to the total strain from start to finish. Engineering strain, on the other hand, simply divides the elongation by a constant, the original length. While mathematically simple, the resultant value is not additive and has meaning only in reference to the original shape.

13. Strain hardening or work hardening is the term used to describe the phenomenon that most metals actually become stronger and harder when plastically deformed. In deformation processes, this means that further deformation will generally require greater forces than those required for the initial deformation. Moreover, the product will emerge stronger than the starting material. Prom a manufacturing perspective, this means that the material is becoming stronger as it is being converted into a more useful shape -- a double benefit. One method of measuring and reporting this behavior is through the strain hardening exponent, n, which is obtained by fitting the true stress-true strain data to the equation form:

$$\sigma = K\,\varepsilon^n$$

14. The hardness of materials has often been associated with the resistance to permanent indentation under the conditions of static or dynamic loading. Other phenomena related to hardness include the resistance to scratching, energy absorption under impact loading, wear resistance, and resistance to cutting or drilling .

15. Brinell Harness Test
(If test surface is rough, it must be made smooth usually by abrasive finishing. This is done in a series of progressively less severe steps to minimize changes in surface properties.)
Select indenter diameter to be used - larger ball for softer materials,
Select load to be applied – larger load for harder materials,
Apply load and hold for specified time,
Remove load,
Measure indentation diameter,
Calculate hardness as load over indentation surface area, or use compiled tabular measured diameter-Brinell Hardness Number data.

16. The test conditions along with the measured Rockwell Hardness Number should be reported. This is usually done by using a specific, standard, Rockwell hardness designation such as R_C60. The Rockwell Harness Number is given, 60 in this case, and the testing conditions are indicated by the “C.” The testing condition include the type of indenter, the major and minor loads and the type of test (standard or superficial with the superficial hardness tests usually indicated by “T”).

17. The various microhardness tests have been developed for applications where it is necessary to determine the hardness of a very small area of material or the hardness of thin material where one wishes to avoid any interaction with the opposing surface and support material.

18.There are a wide variety of hardness tests and they often evaluate different phenomenon: i.e. resistance to permanent or plastic deformation, scratch or wear resistance, rebound energy, and elastic deformation. All results are termed "hardness", but little correlation is expected.

19.There is often a direct correlation between penetration hardness and tensile strength. For plain carbon and low-alloy steels, the tensile strength in pounds per square inch can be estimated by multiplying the Brinell hardness number by 500. For other materials, the relationship may be different.

20.The compression test is more difficult to conduct than the standard tensile test. Test specimens must have larger cross-sectional areas to resist buckling. As deformation proceeds, the cross section of the specimen increases, producing a substantial increase in the required load. Frictional effects between the testing machine surfaces and the end surfaces of the specimen will tend to alter the results if not properly considered.

21. Dynamic loads change over time such as in impact and cyclic loading. Cyclic loading can be reversed type loading as in tension-compression or only changing magnitude as in tension-tension. Dynamic loading usually refers to relatively short term changes in load.

22. The two most common bending impact tests are the Charpy test and the Izod test. The Charpy test loads the specimen (usually notched) in three-point bending. The Izod test loads the specimen in a cantilever fashion.

23. Designers should use extreme caution when applying impact test data for design purposes because the test results apply only to standard specimens containing a standard notch loaded under one condition of impact rate. Modifications in specimen size, the size and shape of the notch, and speed of the impact can produce significant changes in the results.

24. Endurance limit / tensile strength ratios are given in Table 2-3. The table if data show that this ratio varies with material and so no universal relationship between endurance limit and tensile strength exists. A very rough estimate is that endurance limit is about one-half the tensile strength.

25. Fatigue strength is the stress that a fatigue specimen was capable of withstanding for a specified number of load cycles, and therefore refers to any point on a standard S-N plot. Endurance limit or endurance strength, on the other hand, is the limiting stress level below which the material will not fail regardless of the number of cycles of loading.

26. Several factors can drastically alter the fatigue properties of a material. One dominant factor is the presence of stress raisers, such as small surface cracks, machining marks, or gouges. Other factors include the temperature of testing, variation in the testing environment (such as humidity or corrosive atmosphere), residual stresses, and variations in the applied load during the service history.

27. For steels, the endurance limit can be approximated as 0.5 times the ultimate tensile strength as determined by a standard tensile test.

28. Initiation of a fatigue crack involves the development of high stress in a very small, local region of the material. So, any part/loading situations that give rise to high local stresses will tend to cause fatigue crack initiation and these extend all the way from microscopic inherent characteristics of the material to macroscopic part characteristics. Examples are,
- dislocation pileups in the material microstructure,
- part design features such as sharp corners and notches in keyways that cause stress concentrations,
- irregularities (surface roughness) due to manufacturing such as the “peaks-and-valleys” produced on ground surfaces.

29. Fatigue striations are the regular deformation patterns produced on fatigue surfaces as fracture progresses across the surface after a fatigue crack initiation. In fatigue, stress is

varying and the fatigue crack grows progressively or in stages when stress in high. This gives rise to the regions of crack growth called striations.

30. Engineered products frequently operate over a range of temperatures and often have to endure temperature extremes. The materials that are used in these products must exhibit the desired mechanical and physical properties over this range of temperatures. Thus, it is imperative that the designers consider both the short-range and long-range effects of temperature on the materials. This is particularly important when one realizes that the bulk of tabulated material data refers to properties and characteristics at room temperature.

31. Steels and other body-centered crystal structure metals exhibit a ductile-to-brittle transition upon cooling. If this transition occurs at temperatures above those of service, the material will be used in a brittle condition, and sudden, unexpected fractures can occur under conditions that the material would be expected to endure.

32. Material behavior under long-time exposure to elevated temperature is generally evaluated through creep testing, wherein a tensile specimen is subjected to fixed load at elevated temperature. Single tests provide data relating to the rate of elongation and the time to rupture under the specific conditions of testing. A composite of various tests can be used to evaluate the creep rate or rupture life under a variety of load and temperature conditions .

33. The stress-rupture diagram is developed by running a number of creep tests at different temperatures and different stress levels and showing all the data on a single plot. The results show changes in material behavior with changing temperature at various stress levels.

34. Terms such as machinabilty, formability and weldability convey only the general though of how easy it is to process a material and may be useful for very general qualitative comparison of materials. For example, one material may be more formable that another if it is more ductile.

The difficulty in using this general concept arises when quantitative or engineering measures are desired. Ease or difficulty of processing depends not only on material properties but also on the deformation conditions imposed in processing and on material properties at the processing conditions. For example, the performance of a manufacturing process depends on the friction acting, any lubricants and coolants used, the constraints imposed on the deformation such as by die shape in forging, etc. Further, material properties change with temperature and rate of deformation. In addition to heating materials to change there temperature before processing temperature changes during the process due to cooling and heating due to deformation. Materials are often processed in high speed operations in which strain rates are very high.

Comparing material behaviors in processing is very difficult, and dubious, since the behavior depends so critically on the processing conditions.

35. The basic premise of the fracture mechanics approach to testing and design is that all materials contain flaws or defects of some given size. Fracture mechanics then attempts to distinguish between the conditions where these defects will remain dormant and those conditions for which the defects might grow and propagate to failure.

36. The three principal quantities that fracture mechanics tries to relate are: (1) the size of the largest or most critical flaw, (2) the applied stress, and (3) the fracture toughness of the material (a material property).

37. Fracture toughness is resistance to crack growth, *K*. Crack growth rate is shown as it depends on K in Figure 2-36. Units of *K* are (N/m^2) $m^{1/2}$ or (lb/in^2) $in^{1/2}$.

Toughness or modulus of toughness is work per unit volume up to fracture and units are energy/volume = $ftlb/ft^3$ and $Joule/m^3$.

When evaluated using a tensile test the area under the tensile test curve up to fracture has units of (stress)(strain) and so (lb/in^2)(in/in) = $inlb/in^3$ and (N/m^3)(m/m) = Nm/m^3.

38. The three primary thermal properties of a material are:
(1) heat capacity or specific heat - a measure of the amount of energy that must be imparted or extracted to produce a one degree change in temperature; (2) thermal conductivity - a measure of the rate at which heat can be transported or conducted through a material; and (3) thermal expansion - a measure of the degree of expansion or contraction that will occur upon heating or cooling of the material.

39. Since density is directly related to weight any engineering application in which weight is important will be one in which density is an important material property. An example of light weight, low density, being important is an airplane. An example of heavy weigh, high density, being important is a boat anchor.

Often the minimum weight structure needed to support a loading is desired and strength-to-weight ratio is relevant. In this case the strength/density ratio of materials is important.

Problems

1. Products in which performance does not depend on resistance to mechanical loading are probably examples where performance does depend on physical properties.
a. An example is electrical wire. The intent is to conduct electricity, not to withstand appreciable loads. Another example is a camera lens.
b. Electrical conductivity and optical properties determine the major part of the performance of wires and lenses.
c. For wires the material should be ductile so it can be routed and should be a low strain hardening material so working it in installation will not cause large loads and fracture.

2. a. Bookshelves are subjected to static loading over long time.

b. In addition to static strength, bookshelf materials should be stiff and should not creep, i.e., deform over long time at relatively low stress.
c. Material secondary characteristics might include light weight (low density), easy to work and easy to finish in various ways.

3. a) A common component that is subjected to dynamic mechanical loading is a power transmission shaft.
b. The material should have a high fatigue strength (large number of cycles to failure under the expected loading situation).
c. A desirable secondary characteristics is being easy to work so as not to produce a rough surface containing sites of fatigue failure initiation.

4. a) Steels exhibit ductile-to-brittle transition with the transition temperature/temperature range dependent on carbon content and alloying additions.

b) The two steels behaviors shown in Figure 2-32 show ductile-to-brittle transition temperatures in the range of about –30°C (-22°F) to –5°C (23°F).

c) The melting temperature of nitrogen is – 210°C, 63 K, - 346°F
The boiling point of liquid nitrogen is –196°C, 77 K, -321°F.

For discussion of ductile-to-brittle transition using the data for steel presented in Section2.4, liquid nitrogen is well below the ductile-to-brittle transition for steel and so steels are not a reasonable choice for a liquid nitrogen container.

Typical transport and short time storage containers for liquid nitrogen are composed of Dewar flasks usually made of annealed borosilicate glass held in an aluminum, stainless steel, plastic or steel casing. The Dewar may be surrounded by netting to contain the glass in case of breakage. Since the liquid nitrogen does not come into contact with the casing steel casings are used.

In the event of Dewar fracture the liquid nitrogen is not contained on the surface so boiling and the formation of gas at the liquid nitrogen-casing interface probably means that a steel casing would not be subjected to stress and temperature conditions to make ductile-to-brittle transition considerations important.

Stainless steel Dewars are available.

d) There are differences in work material deformation in rolling between the longitudinal and transverse directions with respect to the rolling direction. A different deformation pattern, rolling texture, results and this leads to different microstructure and properties in different directions.

The difference in absorbed energy with rolling direction shown in Figure 2P-1 indicates that the rolling texture has an effect on energy absorbed, i.e., one of the properties affected by rolling texture is toughness.

If impact properties have been improved in steel making the causes must be in the areas of
- development of alloys that are less temperature dependent, i.e., pushing the dashed line in Figure 2-32 further to the left,
- improvement in uniformity of the microstructure so subsequent processing has less effect in changing microstructure uniformity.

The general explanation is that material properties and deformation behavior are determined by composition, structure and surrounding conditions. For fixed deformation conditions, improvement in deformation behavior is the result of improvements in structure, probably due to changing steel composition.

5. The materials are to be distinguished based on the tests described in Chapter 2, the use of readily available household items and the ability to machine the materials. The use of household items and a machine shop indicates that mechanical and physical properties listed in Chapter 2 may be qualitatively measured (comparisons rather that quantitative measurements) in addition to the tests described in Chapter 2.

One way to organize a material separation plan is to consider the applicability to material separation of each test described. The tests may be obviously useful for identifying distinguishable properties, perhaps useful or not useful depending on if the measured quantity is sufficiently different for the two materials. The materials used in this problem are described in detail further on in the text as listed in the table.

Test	1020 vs 1040 Chapter 6	430SS vs 316SS Chapter 6	6061-T6 vs AZ91 Chapter 7	Polyethylene vs Polypropylene Chapter 8
Tensile - strengths - strain hardening	No	Probably based on hardening	Probably – based on strength and hardening	Possibly – based on ductility
Compression	No	Possibly	Probably	No
Hardness	No	Possibly	Yes	No
Impact	No	Possibly	Yes	No
Fatigue	No	No	Yes	No
Toughness	No	Possibly	Yes	No

The general conclusions are
- for materials of the same general type, e.g., steels, thermoplastics, similar strengths and deformation behaviors make drawing distinctions between material difficult,
- the more different the type of material the easier it may be to distinguish between them, e.g., aluminum and magnesium are both metals but sufficiently different to make mechanical testing viable for identifying differences in properties and behavior,

- while strength properties such as yield strength may be difficult to use the changes in material behavior with continuing deformation such as strain hardening and ductility may be useful.

Distinguishing between materials based on the characteristics and properties mentioned in Chapter 2 and using readily available items can be discussed by considering the properties mentioned.

	1020 vs 1040	430SS vs 316SS	6061-T6 vs AZ91	Polyethylene vs Polypropylene
Metallic/Nonmetallic	No	No	No	No
Temperature effects	No	No	No	No
Machinability	No	Yes – effort needed to cut	Yes – effort needed to cut	No
Formability	No	Yes – amount of bending before fracture	Yes – minimum bend radius before fracture	No
Weldability	No	Yes – weld and break	Yes – weld and break	No
Heat capacity	No	No	No	No
Specific heat	No	No	Perhaps	No
Thermal conductivity	No	No	Perhaps – hold end of bars while heating other end	No
Thermal expansion – difficult to test with ordinary items	No	No	No	No
Electrical conductivity	No	No	No	No
Magnetic response	No	Yes – use a magnet	No	No
Weight – accurate electronic scales are available	No	No	Yes	Perhaps
Density	No	No	Yes	Perhaps
Melting point – only relatively small increases in temperature available	No	No	No	Yes
Boling point	No	No	No	No
Optical properties	No	No	No	No

The same general conclusion can be reached – when materials are of similar type distinguishing between them is difficult. However there are particular differences in properties that are qualitatively different and make for easy material identification, e.g., magnetic response of different classes of stainless steels. Differences in deformation behavior can lead to identifiable differences in material use and processing, such as differences in ductility leading to differences in formability.

Case Study:

Overhead Conveyor for Meat Processing

a. There are two reasonable causes of failure worth investigating, given that the hooks have sufficient load carrying capacity to support 300 pounds under typical conditions. The candidate failure inducing mechanisms might stress-corrosion cracking and/or brittle behavior at the freezer temperature.

b. First a simple experiment or analytical stress analysis to determine expected load capacity. With assurance that the hooks are capable of holding the anticipated load, the problem is use of a material that is adversely affected by the in-use environment. A recommended solution is to use stainless steel for the material. It is corrosion resistant and does not behave in a brittle manner at the use temperature. It seems that in a meat packing plant stainless steel would be the first choice for health, cleanliness and mechanical reasons.

c. Underlying materials engineering is the close relationship between structure and mechanical behavior. So, at the level of determining mechanical properties, all microstructural characteristics are important. With respect to the behavior in the use situation described and possible accelerated failure mechanisms, grain boundaries are important in stress corrosion since they are active chemical-mechanical process initiation sites.

CHAPTER 3
Nature of Metals and Alloys

Review Questions

1. Material structure determines material properties. So if material structure can be designed and produced, desirable properties can be obtained. For example, the strength of steel can be controlled by changing not only composition but also by producing useful microstructures in heat treating processes.

2. Microstructure is the structure in a polycrystalline material that is determined by the size, shape and arrangement of the grains making up the material. This is in contrast to the atomic level structure of the material.

3. An ion is an atom that has a different number of electrons than the number of electrons needed for stability. That is, a different number of electrons and protons.

Negative ions have more electrons than protons and so have a net negative charge. Positive ions have missing electrons and so contain more neutrons than electrons and so have a net positive charge.

4. Valence electrons play a large part in an atoms interactions with other atoms and in atomic level processes. The determine the kind of interatomic bonding, chemical properties, electrical properties and optical properties.

5. The three types of primary bonds are
i. ionic bond,
ii. covalent bond,
iii. metallic bond

Ionic bonds form due to the attraction between ions and so atoms that can lose or gain electrons can be bonded. In contrast atoms that assume a lower energy state by sharing electrons form covalent bonds. Metallic bonds form between atoms that readily give up electrons to a shared electron gas. Position in the table of elements is a starting place for predicting what kind of boning will occur between atoms.

6. Ionic bonds are strong primary bonds between ions. The result is that ionically bonded material are hard, brittle, have high melting point and low electrical conductivity. They are strong but not as strong as typical covalently boned materials.

7. Covalent bonds are strong and so materials are strong, hard and brittle. Depending on the number of electrons participating in the bond, covalently bonded materials show wide ranges of electrical, chemical and optical properties.

8. In metallically bonded materials there is a mobile electron cloud that produces bonding. Properties that depend on electron mobility are extreme compared to other types of materials. For example, metals have high electrical and thermal conductivities. Electron-photon interactions account for the opacity of metals.

9. Asymmetric molecules that have nonsymmetrical charge distribution form van der Waal bonds. The bonding is due to the attraction between the differently charged regions of the molecules.

10. The atomic radius is the distance between centers of atoms in a grouping of atoms, i.e., it is not defined and measured for single atoms. The distance between a particular pair of atoms is determined by the balance of attractive and repulsive forces between atoms and between the particular atoms and all their surrounding atomic neighbors. In different crystal structures the ordering of atoms is different, so interatomic force interactions are different, the compliant response of individual atoms to their surroundings is different and hence the distance between atom centers, atomic radius, is different.

11. Crystalline materials have a regular, repeating structure, a repeating elementary arrangement of atoms. Amorphous material does have a repeating, predicable arrangement of the atoms or molecules that make up the material.

12. The metallic bonding of the atoms making up a metal results in a material that is strong, ductile, has high density, high electrical and thermal conductivities and optical luster.

13. Allotropic materials are those that can exist in two or more atomic lattice structures depending on temperature and pressure conditions.

14. Compared to the simple cubic structure, the closer packing arrangement of atoms in face center cubic and body center crystal structure results in a higher packing density of atoms and so more effective electron sharing.

In contract to the existence of particular metallic structures, a more general definition of engineering metals is metals that are used in engineering applications. Simple cubic structure materials are, would be, brittle and so difficult to mechanically work into useful shapes.

15. The common metal crystal structures are body-centered cubic, face-centered cubic and hexagonal close-packed.

16. Efficiency is the amount of space in the lattice that is occupied by the atoms modeled as solid spheres.

Lattice Structure	Packing Efficiency (%)
Simple cubic	52

Body-centered cubic	68
Face-centered cubic	74
Hexagonal close-packed	74

17. When close-packed planes form in the face-centered cubic arrangement there are many possible direction of atomic plane motion resulting in higher ductility than for the hexagonal close-packed arrangement with its smaller number of easy deformation directions. Deformation or slip systems are determined by the possible planes on which deformation can occur easily and the possible directions of slip. Face-centered cubic arrangements have more active slip systems than hexagonal close-packed arrangements.

18. A grain boundary is the relatively disordered region between crystals or grains in which atomic arrangement is relatively well defined and well ordered.

19. The American Society for Testing and Materials grain size number is commonly used to specify grain size. It is defined as n in the relationship

$$N = 2^{n-1}$$

in which N is the number of grains per square inch visible at 100x magnification. Standards are specified for specimen preparation and measurement procedures.

20. Metallic crystals respond to low applied loads by simply stretching or compressing the distance between atoms. All atoms retain their basic positions, with the load serving only to disrupt the force balance of the atomic bonds in such a way as to produce elastic deformations.

21. Plastic deformation is a permanent shift of atoms resulting in a permanent change in size or shape.

22. A slip system for the plastic deformation of a metal is the specific combination of a preferred plane and a preferred direction within that plane. In general, the preferred planes are those with the highest atomic density and greatest parallel separation - the close-packed planes. The preferred directions are the close-packed directions.

23. The dominant mechanical property of the bcc crystal structure metals is high strength. The fcc metals have high ductility. The hcp metals tend to be brittle.

24. A dislocation is a line-type defect within a crystalline solid. Edge dislocations are the terminal edges of extra half-planes of atoms, and screw dislocations are the ends of partial "tears" through the crystal. Since the movement of dislocations provides the plasticity of a material, the force required to move dislocations determines the resistance to plastic deformation, or the strength of the material.

25. Other crystal imperfections can provide effective barriers to dislocation movement and be used to strengthen the metal. These include: point-type defects (such as vacancies, interstitials, or substitutional atoms), additional line-type dislocations, and surface-type

defects (such as grain boundaries) .

26. The three major types of point defects in crystalline materials are: vacancies (missing atoms), interstitials (extra atoms forced between regular atom sites), and substitutional atoms (atoms of a different variety occupying lattice sites).

27. The strain hardening of a metal is the result of the multiplication of the number of dislocations and the interaction between the various dislocations to pin or block the movements of one another.

28. Since dislocations cannot cross grain boundaries (a discontinuity to crystal structure), these boundaries serve to impede dislocation movement and make the material stronger. A material with a finer grain structure (more grain boundaries) will, therefore, tend to be stronger than one with larger grains.

29. An anisotropic property is a property that has different values in different directions.

Possible causes of anisotropy are;
- material creation as in the growth of trees and the casting of metals in which small scale structures (wood fibers, dendritic metallic microstructure) have anisotropic structures and combine in an oriented way to produce large scale anisotropic structure (grain in wood, large grains near the surface of castings),
- material processing in which symmetric microstructures are deformed into structures with distinctive shapes. For example, rolling of a metal that has ideally spherical grains produces elongated grains along the rolling direction. The resulting product has anisotropic mechanical properties, such as different strength and ductility along the rolling direction and perpendicular to the rolling direction..

30. Brittle fractures occur without the prior warning of plastic deformation and propagate rapidly through the metal with little energy absorption. Ductile fractures generally occur after the available plastic deformation has been exceeded.

31. Plastic deformation increases the internal energy of a material through both the creation of numerous additional dislocations and the increased surface area of the distorted grain boundaries. Given the opportunity, the metal will seek to reduce its energy through the creation of a new crystal structure, i.e. recrystallize.

32. Recrystallization is often used to restore ductility to a metal and enable further deformation to be performed. Without recrystallization, further deformation would result in fracture.
NOTE: If the deformation is performed at temperatures above the recrystallization temperature, deformation and recrystallization can take place simultaneously and large deformations are possible .

33. The major distinguishing factor between hot and cold working is whether the deformation is produced at a temperature that is above or below the recrystallization

temperature of the metal. In cold working, no recrystallization occurs and the metal retains its strain hardened condition. When hot working is performed, recrystallization produces a new grain structure and no strain hardening is possible.

34. When an alloy addition is made to a base metal, several possibilities can occur. The two materials can be insoluble and refuse to combine or interact. If there is solubility, the alloy can dissolve in the base metal to produce a solid solution of either the substitutional or interstitial variety. A final possibility is that the two can react to produce an intermetallic compound - a combination with definite atomic proportions and definite geometric relationships.

35. Intermetallic compounds tend to be hard, brittle, high-strength materials .

36. The charge carriers in metals are the valence electrons. The general concept becomes slightly cloudy since in metals the electron sea or electron cloud is composed of electrons that are in essence shared by all the atoms. In a sense the valence electrons belong to all the atoms and are not valence electrons in the sense of the valence electron of an atom.

37. Electrical resistance in a metal depends largely on two factors - the number of lattice imperfections and the temperature . Vacancies, interstitials, substitutional atoms, dislocations, and grain boundaries all act as disruptions to the regularity of a crystalline lattice. Thermal energy causes the atoms to vibrate about their equilibrium positions and interferes with electron transport.

38. Intrinsic semiconductors are ones that occur naturally. Extrinsic semiconductors have chemistries that have been modified by "doping" to enhance or alter their conductivity.

Problems:

None

Case Study:

Window Frame Materials and Design

Wood (such as kiln-dried Ponderosa pine) is easily shaped, can be painted or finished in a wide spectrum of finishes, and has low thermal conductivity (keeping the winter cold and summer heat out). Unfortunately, the material has a definite grain structure, which may lead to cracking or splintering. The material requires special impregnation and coating to improve its ability to resist degradation. Wood requires regular surface maintenance (such as painting or sealing) to minimize moisture absorption and rot. While its dimensions are relatively insensitive to changes in temperature, they can change significantly with changes in humidity or moisture content, leading to possible warping or twisting. The shrinking, swelling and cracking tendencies make it extremely difficult to provide a durable surface protection. Finally, wood is a combustible material.

Aluminum can be extruded into the complex channels used for window frames, is durable, non-corrosive, and can be color anodized or finished into a variety of surfaces. The properties are consistent and predictable and do not change over time, or with variations in temperature (over the range where windows would operate). The material does not absorb moisture, swell, shrink, split, crack or rust. Maintenance is extremely low, but the material has a high thermal conductivity. If the same piece is exposed to a cold exterior and warm, moist interior (as in winter weather), the material will try to achieve thermal uniformity. The inside surfaces will "sweat" with condensation, and thermal efficiency of the window will be poor. Compared with alternatives, however, aluminum is stronger and more rigid (23 times stiffer than vinyl) . From a safety perspective, aluminum is noncombustible and does not emit any toxic fumes when heated to high temperature.

Vinyl windows offer a range of color, and the color is integral to the material. There is no need for any surface finishing and the appearance requires no periodic maintenance. In addition, the thermal conductivity is low, giving the window good thermal efficiency. Unfortunately, polymers have poor dimensional stability, generally shrinking over time, and often deteriorate with prolonged exposure to ultraviolet light (becoming brittle) . Since windows will see prolonged exposure to sunlight, the long term durability and stability may come into question. The thermal expansion of vinyl is considerably greater than either aluminum or wood, and the resulting dimensional changes may cause distortion of the windows. In addition, the properties of vinyl will vary over the temperature range that the product will see. When heated, vinyl loses strength, and when cold, it becomes more brittle and less impact resistant. The material is combustible and may emit toxic fumes when exposed to high temperatures.

It would appear that aluminum is a superior structural material, whose primary detriment is its high thermal conductivity. If a design could be developed to insert some form of conductivity barrier between the outside and inside surfaces, the resulting window would offer the best of all worlds. Several companies currently offer such a design, linking the inside and outside extrusions with a high-strength polymeric link. Being totally internal, this polymer is not subject to sunlight deterioration, and does not significantly impair the structural performance of the window.

CHAPTER 4
Equilibrium Phase Diagrams and the Iron-Carbon System

Review Questions

1. A phase is a portion of a substance possessing a well-defined structure, uniform composition, and distinct boundaries or interfaces.

2. In a glass of soda with ice, the soda is continuous and the ice is discontinuous. Helium in a balloon is a gaseous phase, and coffee with cream is a single-phase solution.

3. An equilibrium phase diagram is a graphical mapping of the natural tendencies of a material system (assuming that equilibrium has been attained) as a function of such variables as pressure, temperature, and composition.

4. The three primary variables considered in equilibrium phase diagrams are: temperature, pressure and composition.

5. A pressure-temperature phase diagram is not that useful for many engineering applications because most processes are conducted at atmospheric pressure. Most variations occur in temperature and composition.

6. A cooling curve is a temperature versus time plot of the cooling history when a fixed-composition material is heated and subsequently cooled by removing heat at a uniformly slow rate.

7. Transitions in a material's structure are indicated by characteristic points on the cooling curve. These characteristic points may take the form of an isothermal hold, abrupt change in slope, or localized aberration to the continuity of the curve.

8. Solubility limits denote the conditions at which a solution becomes completely saturated, i.e. any additional solute must go into a second phase. Solubility limits are generally determined through use of inspection techniques such as X-ray analysis (detects where a new crystal structure or lattice spacing appears) or microscopy (detects the presence of the second phase), that can be used to identify the composition where the transition from one to two-phase occurs.

9. In general, as the temperature of a system is increased, the maximum amount of a substance that can be held in solution also increases.

10. Complete solubility implies complete solubility in both liquid and solid states. The two types of atoms have to be able to exist in the same crystalline structure. Atom “size” and valence electron structure have to be similar.

Partial solubility results when there is a saturation limit for one type of material in another and this saturation limit depends on temperature. So, as temperature is lowered and solubility decreases a two phase material forms from the initially one phase material.

Insolubility means that the materials are so different in nature (atomic size, valence electron structure, etc.) that they are totally insoluble in each other.

11. Upon crossing the liquidus line during cooling, the first solid begins to form in the material. Upon crossing the solidus line, solidification is complete, i.e. there is no longer any liquid present. Upon crossing a solvus line, a single phase material begins to precipitate a second phase, since the solubility limit is now being exceeded.

12. The three pieces of information that can be obtained from each point in an equilibrium phase diagram are: the phases present, the composition (or chemistry) of each phase, and the amount of each phase present.

13. A tie-line is an isothermal line drawn through any point in the two phase region of a phase diagram, terminating at the boundaries of the single phase regions on either side. It is used in the two-phase regions of an equilibrium phase diagram.

14. The end points of the tie-line correspond to the compositions of the two phases present.

15. The relative amounts of the component phases in a two-phase mixture can be computed through use of the lever law. The tie-line is separated into two segments by dividing it at the chemistry of the alloy in question. The fraction of the total length of the tie-line that lies opposite to a given phase corresponds to the fractional amount of that particular phase.

16. Cored structures refer to materials that have microscopic level variations in chemical composition.

Cored structures form because as the metal solidifies through the freezing range the chemical composition constantly changes. If cooling rate is rapid, material diffusion rate is too slow to produce uniform chemistry. Different regions of the solid material have different chemical characteristics determined by the temperature at which the regions solidified.

17. Three-phase reactions appear as horizontal lines in binary (two-component) phase diagrams. These lines have a distinctive V intersecting from above, or an inverted~ V intersecting from below. The intersection of the V and the horizontal line denotes the three-phase reaction, which is usually written in the form of cooling, i.e. the phases present above the line going to those present below.

18. A eutectic reaction has the general form of Liquid ---> Solid 1 + Solid 2. In essence, a liquid solidifies to form two distinctly different solids of differing chemistries.

19. Eutectic alloys are attractive for casting and as filler metals in soldering and brazing because they generally have the lowest melting point of all alloys in a given system and solidify into a relatively high-strength structure.

20. A stoichiometric intermetallic compound is a single-phase solid that forms when two elements react to form a compound of fixed atomic ratio. The compound cannot tolerate any deviation from that fixed ratio, so it appears as a single vertical line in a phase diagram, breaking the diagram into recognizable sub areas . Non-stoichiometric intermetallic compounds are single phases that appear in the central regions of a phase diagram, that can tolerate chemical variations, and thus have an observed width. They appear as a region and not a line.

21. In general, intermetallic compounds tend to be hard, brittle materials .

22. If an intermetallic compound can be uniformly distributed throughout a structure in the form of small particles in a ductile matrix, the effect can be considerable strengthening of the material. If the intermetallic should become the continuous phase (as in a grain boundary coating) or be present in large quantities, the material will be characteristically brittle.

23. The four single phases in the iron-carbon equilibrium phase diagram are: ferrite (alpha), which is the room-temperature body-centered cubic structure; austenite (gamma), the elevated temperature face-centered cubic phase; delta-ferrite (delta), the high-temperature body-centered cubic phase; and cementite (Fe_3C), the iron-carbon intermetallic compound that occurs at 6.67 wt. percent carbon.

24. The point of maximum carbon solubility in iron, 2.11 weight percent, forms an arbitrary division between steels and cast irons. Cast irons contain greater than 2.11% carbon and experience a eutectic reaction upon cooling.

25. Some of the key characteristics of austenite are its high formability (characteristic of the fcc crystal structure) and its high solubility of carbon (a good starting point for heat treatment) .

26. The most important three-phase reaction in the iron-carbon diagram when considering steels is certainly the eutectoid reaction. Under equilibrium conditions, austenite of 0.77 weight percent carbon and the fcc crystal structure transforms into ferrite of the bcc crystal structure, capable of holding only 0.02% carbon and cementite or iron carbide with 6.67% carbon. In essence, iron changes crystal structure and the rejected carbon goes to form the iron carbide intermetallic.

27. The fcc crystal structure of austenite is capable of dissolving as much as 2.11% carbon at elevated temperature. In contrast, the bcc crystal structure of ferrite can hold only 0.02% carbon at its maximum solubility and 0.007% at room temperature .

28. Pearlite is the name given to the structure formed when austenite undergoes the eutectoid reaction under equilibrium (or near-equilibrium) conditions. It is a lamellar structure composed of alternating plates of ferrite and cementite, but has its own characteristic set of properties, since it always forms from the same chemistry at the same temperature.

29. Steels having less than the eutectoid amount of carbon (less than 0.77% carbon) are called hypoeutectoid steels. Their structure consists of regions of ferrite that formed before the eutectoid reaction (primary or proeutectoid ferrite) and pearlite that formed as the remaining austenite underwent the eutectoid transformation. Steels with greater than 0.77% carbon are called hypereutectoid steels and have structures consisting of primary cementite and pearlite.

30. The general composition of cast irons is 2.0 to 4.0% carbon, 0.5 to 3.0% silicon, less than 1.0% manganese, and less than 0.2% sulfur. In addition, nickel, copper, chromium and molybdenum may be added as alloys. Silicon is the major new addition. It partially substitutes for carbon, and promotes the formation of graphite as the high-carbon phase.

31. Silicon content of cast iron is 0.5% to 3.0%. Silicon partially substitutes for carbon and promotes the formation of graphite as the high-carbon phase.

32. Cast irons often contain graphite as the high-carbon phase instead of the cementite (or iron carbide) commonly found in steels. Graphite formation is promoted by slow cooling, high carbon and silicon contents, heavy section sizes, inoculation practices, and alloy additions of Ni and Cu. Cementite is favored by fast cooling, low carbon and silicon levels, thin sections, and alloy additions of Mn, Cr, and Mo.

33. The microstructure of gray cast iron consists of three-dimensional graphite flakes dispersed in a matrix of ferrite, pearlite, or other iron-based structure.

34. Since the graphite flakes in gray cast iron have no appreciable strength, efforts to increase the strength of this material must focus on improving the strength of the iron-based matrix structure.

35. Gray cast irons possess excellent compressive strengths, excellent machinability, good wear resistance, and outstanding vibration damping characteristics. In addition, the silicon provides good corrosion resistance and the high fluidity desired for castings. Low cost is an additional asset.

36. Gray cast iron contains graphite flakes and so exhibits low ductility. The graphite component produces stress concentrations, crack initiation sites and the resulting brittleness.

37. White cast iron is very hard, but very brittle. It finds application where extreme wear resistance is required.

38. Malleable iron is essentially heat-treated white cast iron where a long time thermal treatment changes the carbon-rich phase from cementite to irregular graphite spheroids. The more favorable graphite shape removes the internal notches of gray cast iron and imparts the increased ductility and fracture resistance .

39. The graphite is in the form of smooth, approximately spherical particles.

The graphite shape formation is controlled by material additions to the cast iron and cooling rate. In contrast to controlling graphite particle shape by complicated heat treatment as in the malleable cast irons.

Since the graphite flakes do not act as strong fracture initiation sites due to their shape, material ductility increases.

40. Increased cost of ductile cast iron compared to gray cast iron is due to
- increased cost of material additions needed to form spherical graphite,
- more sophisticated furnaces and control systems to assure the formation of desired graphite structure.

41. Compacted graphite cast iron is characterized by a graphite structure intermediate to the flake graphite of gray cast iron and the nodular graphite of ductile iron. It forms directly upon solidification, and possesses some of the desirable properties and characteristics of each.

Problems:

1.Since the topic is producing and processing engineering materials, the phase diagram will be a temperature-composition diagram and the temperature range is over the solid and liquid material state range.

i. The two components selected can be completely soluble in each other in both liquid and solid states. The general form of the equilibrium diagram is shown in Figure 4-6.

ii. The two components can be completely insoluble in each other in liquid and solid phases and the general form of the equilibrium or phase diagram is shown in Figure 4-7.

iii. For materials that are partially soluble the general equilibrium diagram is shown in Figure 4-8 and is extended to include a three phase reaction for some materials. The diagram then contains a V-shaped line meeting another line such as at composition of 61.9% tin and temperature of 183^o C in Figure 4-5. General cases are shown in Figure 4-9. The cusp/inflection of the liquidus line indicates a very particular, well defined state and solidification process.

The identification is then
a. Single phase

i For completely soluble materials there will be a liquid solution for temperature-composition states above the liquidus line. A solid solution exists at states below the solidus line.
ii. For insoluble materials there will be no single phase regions on the diagram.
ii For the point of contact between the V-shaped line with the solidus line single phase material exists above and below the contact point and two phase material to the left and right of the point.

b. Three phase reaction
i. Reactions between two completely soluble materials will not result in a three phase state.
ii. The is no interaction between insoluble materials and so two such materials will not form three phases.
iii. Three phase reactions occur for partially soluble materials at the point of contact between the V-shape line and the solidus line. The liquid phase meets two-phase regions at this point.

c. Intermetallic compound
i. Completely soluble material form solutions not compounds.
ii. Ideal completely insoluble materials do not interact and so will not form compounds.
iii. Stoichiometric intermetallic compounds exist in a fixed atomic ration and so are represented by vertical lines on equilibrium diagrams, Figure 4-9. Nonstoichiometric intermetallic compounds are shown as regions of compositions. These regions are usually narrow.

2. A way to approach looking for applications of particular material is to identify material characteristics that point to particular kinds of use and so to look for products in that use area.

a. Gray cast iron has low alloy content and is easily produced resulting in a low cost material and the possibility of casting complex shapes. The microstructure is composed of dispersed graphite flakes in a metal matrix. This leads to brittleness, ease of machining, high damping capacity and low tensile strength but high compressive strength.

Application in situations with large size, compressive loading and required damping are indicated, e.g., machine tool structures.

b. White cast iron behavior is determined to a large extent by the high iron carbide content. White cast iron is hard and brittle.

Applications in which minimal wear rate is required and the loading is compressive are typical, e.g., machine tool ways.

c. Malleable cast iron has higher ductility than gray or white cast irons because the form of the graphite is nodular, not flake-like. To produce this microstructure high cooling rates are required.

The ductility of malleable cast iron means higher tensile strength, greater impact strength and easier further processing (e.g., machining) than for the more brittle cast irons. The required fast cooling rate implies the production of relatively small castings to assure fast cooling and acceptable temperature gradients.

Applications are small parts that require significant further processing and are used in relatively high tensile stress situations, e.g., rigging components such as pulley supports.

d. Ductile cast iron has the same type of graphite shape as malleable cast iron, but the microstructure is formed by alloying additions rather than the involved heat treatment needed to produce malleable cast iron. The desirable mechanical properties and ease of processing of malleable cast iron are also characteristic of ductile cast iron. The need to carefully control alloying and production of ductile cast iron leads to a higher cost material than malleable cast iron.

Applications are then similar to those for malleable cast iron in which higher cost can be justified, e.g., jigs and fixtures.

e. Compacted graphite cast iron has graphite microstructure between those of gray cast iron and ductile cast iron. The newly developed, easier to control production process makes for a less costly material that still possesses reasonable strength, ductility and machinability. Compacted graphite cast iron has higher thermal conductivity than ductile cast iron.

Applications are in newer applications in which the increased mechanical properties of ductile cast iron are desirable along with high thermal conductivity. Cast iron internal combustion engine components are starting to be the major uses of compacted graphite cast iron

Case Study:

The Blacksmith Anvils

1. The anvil will be subjected to the shock of direct and indirect hammer blows during the forging of metals. The surfaces must be resistant to wear, deformation and chipping, and good energy absorption or damping characteristics would be an added plus, acting to reduce noise and vibration. The anvil must have sufficient mass to absorb the blows, and not tip or move when the blows are offset from the base. The material must resist damage when red-hot metal is placed in contact with its surfaces for brief to moderate periods of time. Since heat retention in the workpiece is desirable, heat transfer to and through the anvil should be minimized. Corrosion resistance to a normal shop atmosphere would also be desirable. While the dimensional requirements can be somewhat lenient, the working surface should be flat and reasonably smooth.

2. Features influencing the method of fabrication include the cited yield strength, elongation and hardness, and somewhat limited production quantity. In addition, the somewhat massive size (both weight and thickness) can be quite restrictive. The width is probably about 4-inches or greater. Other than a single mirror plane, there is no

significant symmetry or uniformity of cross section. Handling should be minimized because of the size and weight.

Because of the size (both length and thickness), complexity of shape, and limited production quantity, some form of expendable-mold casting appears to be the most attractive process. Forging would be another alternative, but the size and quantity could be quite limiting.

3. Because of the need for impact resistance, cast irons would most likely come from either the malleable or ductile families, but the section thickness may present problems for the production of malleable. Cast steels would also be quite attractive, but the higher melting temperatures, lower fluidity, and high shrinkage could present problems. Alloyed material may be necessary for the desired heat treatment response.

4. Production alternatives include casting the entire piece from a single material, or casting the base of one material (including the horn) and welding or otherwise attaching a plate of stronger material to the top. Because of the desire to replicate the 1870's design, a single material is probably preferred .

While any of the materials discussed in section 3 would be workable alternatives, ductile cast iron might be the most attractive. It would most likely be cast in some form of sand mold, possibly one with higher strength than green sand. After casting, heat treatment would likely be necessary to establish the desired properties. A normalizing or annealing treatment would produce the desired properties with a very stable structure. The working surfaces and mounting base would be subjected to some form of surface grinding. If needed, a deep surface hardening treatment, such as flame hardening, could be used on the critical surfaces to increase the hardness.

CHAPTER 5
Heat Treatment

Review Questions

1. Heat treatment is the controlled heating and cooling of metals for the purpose of altering their properties. Its importance as a manufacturing process stems from the extent to which properties can be altered.

2. Heat treatment changes material structure at the microscopic level and so can change both physical and mechanical properties.

3. While the term "heat treatment" applies only to processes where the heating and cooling are done for the specific purpose of altering properties, heating and cooling often occur as incidental phases of other manufacturing processes, such as hot forming and welding. Material properties will be altered as the material responds in the same way it would if an intentional heat treatment had been performed. Properties can be significantly altered by the heating and cooling.

4. Processing heat treatments are slow cool, rather long time, treatments designed to prepare a material for fabrication. Some possible goals of these treatments are: improve machining characteristics, reduce forming forces, or restore ductility for further fabrication .

5. Since most processing heat treatments involve rather slow cooling or extended time at elevated temperature, the conditions tend to approximate equilibrium, and equilibrium phase diagrams can be used as a tool to understand and determine process details .

6. The A_1, A_3 and A_{cm} lines are used to describe transitions on iron carbon phase diagrams. The A_1 line designates the eutectoid line. A_3 designates the boundary between austenite and ferrite+austenite regions. A_{cm} separates the austenite and austenite+cementite regions.

7. Annealing operations may be performed for a number of reasons, among them: to reduce strength or hardness, remove residual stresses, improve toughness, restore ductility, refine grain size, reduce segregation, or alter the electrical or magnetic properties of a material.

8. Full anneals can produce extremely soft and ductile structures, but they are time consuming and require considerable energy to maintain the elevated temperatures required during the soaking and furnace cooling. In addition, the furnace temperature is changed during the treatment, so the furnace must be reheated to start another cycle.

9 . If hypereutectoid steels were slow cooled from the all-austenite region, they would spend considerable time in the austenite plus cementite condition, and the hard, brittle cementite that forms would tend to produce a continuous network along the grain boundaries. A small amount of cementite in a continuous network can make the entire material brittle.

10. The major difference of normalizing compared to full annealing is the use of an air cool in place of the long time, controlled furnace cool. This reduces processing time, furnace time, and fuel and energy use. However, the furnace cool of a full anneal imposes identical cooling conditions at all locations within the metal and produces identical properties. With normalizing, the cooling will be different at various locations. Properties will vary between surface and interior, and different thickness regions will have different properties.

11. Process heat treatments that do not require the reaustenitization of the steel include: the process anneal, designed to promote recrystallization and restore ductility; the stress-relief anneal, designed to remove residual stresses; and spheroidization, a process to produce a structure that enhances the machinability or formability of high-carbon steels.

12. Process anneals are performed on low-carbon steels with carbon contents below 0.25% carbon. Spheroidization is employed on high-carbon steels with carbon contents greater than 0.6%C.

13. The recrystallization process and its kinetics is a function of the particular metal, the degree of prior straining, and the time provided for completion. In general, the more a metal has been strained the more energy has been stored, and the lower the recrystallization temperature or the shorter the time.

14. The six major mechanisms available to increase the strength of a metal are: solid solution strengthening, strain hardening, grain size refinement, precipitation hardening, dispersion hardening, and phase transformation hardening. All techniques are not applicable to every metal.

15. The most effective strengthening mechanism for the nonferrous metals is precipitation hardening.

16. Precipitation hardening begins with a solution treatment to create an elevated-temperature single-phase solid solution, followed by a rapid quench to produce a supersaturated solid solution, and then a controlled reheat to age the material (cause the material to move toward the formation of the stable two-phase structure).

17. Precipitation hardening metals are either naturally aging (ages at room temperature) or artificially aging (requires elevated temperature to produce aging). Considerable flexibility and control is offered by artificial aging, since the properties can be altered and controlled by controlling the time and temperature of elevated temperature aging. Dropping the temperature terminates diffusion and retains the structure and properties

present at that time. NOTE: Subsequent heating, however, will continue the aging process.

18. In a coherent precipitate, the crystallographic planes of the parent structure are continuous through the precipitate cluster, and the solute aggregate tends to distort the lattice to a substantial surrounding region. In contrast, second-phase particles have their own crystal structure and distinct interphase boundaries .

19. Overaging is the decrease in hardness and strength of precipitation or age hardened materials. Overaging occurs when the solute atoms form large enough clusters that coherency of the solute atom clustering is lost. The large effects of coherent clusters on hindering dislocation motion are lost. The large noncoherent clusters than act as a dispersion hardening mechanism.

20. In constructing the IT or T-T-T diagram, thin specimens of a metal are heated to form uniform, single-phase austenite, and are then instantly quenched to a temperature where austenite is not the stable phase. The samples are then held at this constant temperature for variable periods of time and the kinetics of the structure change are determined. Such instantaneous changes in temperature followed by isothermal holds are quite unrealistic for manufactured items, which usually undergo some form of continuous cooling as heat is extracted from surfaces and fed to the surfaces from the hot interior.

21. For steels below the A_1 temperature, the stable phases predicted by the equilibrium phase diagram are ferrite and cementite .

22.According to the T-T-T diagram, some of the non-equilibrium structures that may be present in heat-treated steels are:
bainite, martensite, tempered martensite, and retained austenite.

23. Martensite forms from austenite by an instantaneous change in crystal structure with no diffusion. The fcc austenite transforms to the body-centered structure which is distorted into a tetragonal shape to accommodate the additional carbon. The degree of distortion is proportional to the amount of trapped carbon .

24. The major factor determining the strength and hardness of steel in the martensitic structure is the amount of carbon present in the steel.

25. Retained austenite is austenite which remains in a metastable state at temperatures where the equilibrium phase diagram predicts that it should no longer exist. It can be responsible for low strength or hardness, dimensional instability or cracking, or brittleness (by transforming to untempered martensite at some later time) .

26. As formed, martensite lacks sufficient toughness and ductility to be useful as an engineering material. Tempering is the controlled decomposition of the single-phase supersaturated solid solution toward the formation of the stable ferrite and cementite structure. Ductility and toughness improve at the expense of strength and hardness.

27. Both heat treatments begin by replacing the original structure with an elevated-temperature, single-phase solid solution (redissolving any second phases) . A quench then produces a supersaturated solid solution. A more moderate reheating then permits diffusion to move the material toward formation of the stable two-phase configuration. When age hardening, the quenched material is weaker and more ductile, and aging increases the strength at the expense of ductility. With the quench-and-temper process, the quenched structure is strong, but lacks ductility. Tempering increases ductility at the expense of strength.

28. The C-C-T diagram, continuous-cooling-transformation diagram, shows the phase and composition of steels on cooling as functions of temperature and time.

The C-C-T diagram is more useful than the T-T-T diagram since it describes more realistic heat treatment conditions. The T-T-T diagram assumes instantaneous cooling and complete isothermal transformations that are not the actual situations.

29. In the Jominy end-quench hardenability test, a standard steel specimen is subjected to a standardized quench. Since the thermal conductivity of steel is essentially constant for the range of carbon and low-alloy steels, the cooling rate varies with the distance from the quenched end - from rapid quench to an approximate air-cool.

30. The quench in the Jominy test is standardized by specifying the quench medium (water), quenchant temperature (75 F), internal nozzle diameter (1/2 inch), water pressure, and the gap between the nozzle and the specimen.

31. The concept of "equivalent cooling rates" is based on the assumption that identical results will be obtained if a material undergoes identical cooling history. If the cooling rate is known for a given location within a part, the properties at that location can be predicted as those at the equivalent cooling rate location of a Jominy test bar (well-documented in many reference texts) .

32. Hardenability is a measure of the depth to which full hardness can be obtained when heat-treating a steel. It is primarily dependent upon the types and amounts of alloy elements in the steel.

33. The depth of hardening can be increased by increasing either the severity of the quench or the hardenability of the steel. Quench changes may be limited by cracking or warping problems, however. Hardenability is increased by increasing the amount of alloy additions.

34. The three stages of liquid quenching are: the vapor-jacket stage, the second stage in which the quenchant extracts heat by boiling, and the third stage where the mechanism of heat transfer is limited to conduction and convection.

35. As a quench medium, water offers a high heat of vaporization, and second-stage cooling down to 212^0F. It is cheap, readily available, easily stored, nontoxic, nonflammable, smokeless, and easy to filter and pump. On the negative side, the bubbles tend to cling, it is an oxidizing medium, and is corrosive. In addition, the rapid rates of cooling often induce distortion and cracking.

36. Oil quenches are generally less likely to produce quench cracks than water or brine for several reasons. The rate of heat extraction into boiling oil is slower than in boiling water. The major difference, however, is due to the fact that the boiling points of oils are sufficiently high that the transition to the third-stage of quenching occurs before the martensite start temperature. Slower cooling through the martensite transformation leads to a milder temperature gradient and a reduced likelihood of cracking.

37. Polymer or synthetic quenches cool more rapidly than oils but slower than water or brine. They can be tailored by varying the concentrations of the quench components to provide extremely uniform and reproducible results. They are less corrosive than water or brine, are cheaper and less of a fire hazard compared to oils, and tend to minimize distortion.

38. Some undesirable design features in parts that are to be heat treated include: nonuniform sections or thicknesses, sharp interior corners, and sharp exterior corners.

39. When steel is quenched, the elevated temperature face-centered cubic structure changes to the body-centered configuration, and expands When aluminum is quenched, it cools and thermally contracts. In most cases, the residual stresses formed by cooling tend to be opposite for the two materials.

40. Residual stresses can be undesirable because, in service, they add algebraically to the stresses applied to the part. Loads well within the design limit may couple with unfavorable residual stresses to produce failure. By themselves, residual stresses may produce unwanted distortion or cracking.

41. Quench cracking is due to temperature gradients. Differences in temperature between different regions produce stresses and possibly different phases. The mechanical and structural mismatches are large enough to cause fracture.

42. Two methods of producing strong structures while minimizing residual stresses and the likelihood of cracking are austempering and martempering. A rapid cool is used to reduce the temperature of the material to just above the martensite start. The temperature is then allowed to become uniform prior to either further cooling to martensite (martemper) or isothermal transformation to bainite (austemper) .

43. In thermomechanical processing, mechanical deformation and heat treatment are intimately combined into a single process.

44. Selective heating techniques for surface hardening include:

flame hardening, induction hardening, laser beam hardening, electron beam hardening, and lead-pot or salt bath immersion.

45. Laser beam surface hardening operates at high speeds, produces little distortion, induces compressive residual stresses on the surface, and can be used to harden selected surface areas while leaving the remaining surfaces unaffected. Computer control and automation can be readily used and conventional mirrors and optics can be used to shape and manipulate the beam.

46. Carburizing is the elevated temperature surface treatment in which carbon is caused to diffuse into steel. The carbon may be in a solid, liquid or gaseous environment around the part being treated.

The intent of carburizing is to alter material composition and structure in selected regions of the part. In order to control the distribution of carbon in the part further heat treatment after the initial diffusion process may be required. Rapid cooling is used to fix the carbon in the high temperature state. Slow cooling is used to produce further, controlled diffusion of the carbon into the part.

47. Compared to conventional nitriding or carburizing, ionitriding offers shorter cycle times, reduced consumption of gases, significantly reduced energy costs, reduced space requirements and the possibility of total automation. Product quality is improved and the process is applicable to a wider range of materials.

48. Batch furnaces may be preferred to continuous furnaces when the productions runs are small and the details of the thermal processing vary from lot to lot. Continuous furnaces are best for large production runs of the same or similar parts that undergo the same thermal process.

49. Artificial atmospheres are often used during heat treatment operations to suppress undesirable reactions such as scale formation or tarnishing, prevent decarburization, or supply carbon or nitrogen for surface modification.

50. In a fluidized-bed furnace, a bed of dry, inert particles is heated and fluidized by a stream of flowing gas. Parts introduced into the fluidized media become engulfed and are heated by radiant heating. Temperature and atmosphere can be altered quickly, heat transfer rate and thermal efficiency are high, and fuel consumption is low. Due to high flexibility, one furnace can be used for multiple applications.

51. While heat treatment consumes large amounts of energy, its use may actually be an energy conservation measure because it enables the manufacture of a higher-quality, more durable, product. In addition, higher strengths may permit the use of less material to produce a comparable product.

Problems:

1. While this is essentially a library-research project, it is hoped that the student will note such features as the following:
Flame and induction hardening are performed on materials that have the capability of possessing both the desired substrate properties and the desired surface properties. Carburizing alters the surface chemistry and achieves the desired hardness through subsequent heat treatment. This treatment can take the form of a direct quench from the carburizing treatment, a quench from a reheat to a lower temperature, 'or dual surface and substrate treatments. Nitriding also modifies the surface chemistry, but the nitrided layer cannot sustain subsequent heat treatment. Therefore, the substrate is fully heat-treated prior to nitriding, and the hard surface is formed after the heat treatment .The additional information can be found in numerous references, such as Metals Handbook, or the references cited under the "Heat Treatment" and "Surfaces and Finishes" sections of the Selected References for Additional Study.

2. At the time of preparation a internet search for “boriding” gave the following sites in the first 15 sites listed and the information gleaned from them is presented in the table below.
www.thomasregister.com/olc/metlab/bori.htm
www. concentric.net/~ctkang/boride.shtml
www.staff.ncl.ac.uk/s.j.bull/SENotes.html
www.mrs.org/publications/jmr/jmra/1989/novdec

	Boriding / Boronizing	
1	Process description	parts are packed in a boron containing material and heated in a furnace in - vaporized boron reacts with the work material forming hard boron compounds
2	Materials	typically steels, but many alloying additions react with boron
3	Equipment	only a controlled atmosphere furnace
4	Processing conditions	boron gas atmosphere, up to 980^{o}C, 1800^{o}F, hours
5	Hardened depth	10 - 100 µm, 0.0003 - 0.003 in
6	Hardness	1600 – 4000 HV depending on boron compound formed
7	Further processing	may be followed by tempering
8	Distortion/Stress	as with any surface layer production or modification process mismatches in microstructure or deformation state result in stress gradients and distortion
9	Selective area hardening	conceivable to shield areas of part with only small diffusion of boron under shield parallel to surface

3. While the basic information on these processes has been summarized in the text, this problem encourages the students to dig deeper in a library-research mode. One will learn, for example, that there are actually several means of spheroidizing a high-carbon steel. These are different processes with the same objective and utilize the same name. It is important that users understand the entire process, and all of the intricacies, such as the different effects of full anneal and normalizing on subsequent machining (as discussed in the text) .
Useful references again are Metals Handbook and those listed in the "Heat Treatment" section of the Selected References for Additional Study.

4.The effectiveness of quenching usually means the length of time needed to bring the workpiece temperature to a desired temperature. The shorter this time the more effective the quench. In the typical quenchant vaporization – quenchant boiling – conduction heat transfer processes that occur when the work is immersed in the quenchant. The initial vaporization process has the lowest rate of heat transfer out of the workpiece. If the vaporization phase can be minimized the effectiveness of quenching will be increased. With use of a hot oil the quenchant is brought to the boiling stage of quenching faster than with a cold oil and so quenching is more effective.

Case Study:

A Flying Chip from a Sledgehammer

The hammerhead chipped because of the formation of untempered martensite. Untempered martensite of 0.6% carbon would have a hardness of about Rockwell C 65 and would be extremely hard and brittle, quite likely to crack upon impact.

The procedure used to grind off the mushroom would likely involve removing the handle to permit hand grinding of the head. This would then be periodically dipped into a container of water when it gets too hot to hold. Considering the size and mass of a 15-pound sledge hammer head, and the thermal conductivity of steel, it is quite possible that the temperatures in the grinding region could be sufficient to reaustenitize ($>1333^0$F) the metal before the operator would feel uncomfortably high temperatures in the gripped region (especially if he were wearing some type of protective leather-palmed glove) . Upon water quench, the austenite would transform to untempered martensite. Subsequent grinding might bring about some degree of tempering, but this is not assured and all of the untempered martensite may not be affected.

Possible solutions to the problem include: (1) alteration of the grinding procedure to prevent the generation of such excessive temperatures, or (2) a required furnace retempering of the entire head prior to reassembly and reuse, and (3) mandatory use of safety goggles when using the sledge hammers.

CHAPTER 6
Ferrous Metals and Alloys

Review Questions

1. Many of the properties and characteristics of engineering materials depend not only on the material itself, but also on the manner of production and the details of processing. Aspects of prior processing can significantly influence both further processing and the final properties of the product.

2. A ferrous material is one that is based on the element iron (i.e. iron is the major chemical constituent of the material).

3. When iron ore is reduced to metallic iron, other elements are usually present in the product. All of the phosphorus and most of the manganese in the ore will also reduce and will enter the iron. The oxides of silicon and sulfur will be partially reduced and these elements will also become part of the metal.

4. Pig iron is a high-carbon, high-silicon material with a chemistry in the range of 3.0 to 4.5% carbon, 1.0 to 3.0% silicon, 0.15 to 2.5% manganese, 0.05 to 0.1% sulfur, and 0.1 to 2.0% phosphorus. In the conversion into steel, the pig iron is subjected to an oxidation process that substantially decreases the amount of carbon, silicon, manganese, phosphorus, and sulfur.

5. Ladle metallurgy refers to a variety of processes designed to provide final purification and fine tune both the chemistry and temperature of the melt. Alloy additions can be made, carbon can be further reduced, dissolved gases can be reduced or removed, and steps can be taken to control subsequent grain size, limit inclusion content, reduce sulfur, and control the shape of any included sulfides. Stirring, degassing, reheating, and various injection procedures can be performed to increase the cleanliness of the steel and provide tighter control of the chemistry and properties.

6. By extracting molten steel from the bottom of a ladle, slag and floating matter are not transferred to the solidified product .

7. Solidification shrinkage is the term applied to the often substantial change in dimensions that occurs when a liquid changes to solid. The more efficient arrangement of atoms results in an increase in density and a decrease in volume.

8. Continuous casting virtually eliminates the problems of piping and mold spatter. In addition, it eliminates the pouring into molds, stripping the molds from the solidified metal, and the handling and reheating of the ingots prior to rolling. Cost, energy and

scrap are all significantly reduced. The products have improved surfaces, more uniform chemical composition, and fewer oxide inclusions.

9. Dissolved oxygen in molten steel can be removed by adding aluminum, ferromanganese or ferrosilicon to the molten steel. In this deoxidation process the added materials react with the dissolved oxygen to form solid metallic oxides.

10. Gases can be removed from molten steel by vacuum degassing, vacuum arc remelting, vacuum induction melting and electroslag remelting.

11. Electroslag remelting can be used to produce extremely clean, gas-free metal. The nonmetallic impurities are collected in the flux blanket, leaving beneath a newly solidified structure with improved quality.

12. A plain carbon steel is an alloy of iron and carbon, containing manganese, phosphorus, sulfur, and silicon in normal, but small, quantities.

13. A low-carbon steel is one that has less than 0.20% carbon.

Medium-carbon steel contains 0.20% to 0.50% carbon.

High-carbon steels contain more than 0.50% carbon.

14. Medium-carbon steels are used in high volumes because they offer the best overall balance of engineering properties. The high fatigue and toughness properties of the low carbon steels are effectively compromised with the strength and hardness of the higher carbon contents.

15. Plain-carbon steels are the lowest-cost steel material. Because of the low cost, they should be given first consideration for many applications.

16. The most common alloy elements added to steel include:
chromium, nickel, molybdenum, vanadium, tungsten, cobalt, boron, and copper, as well as manganese, phosphorus, sulfur, and silicon in amounts greater than normally present.

17. Alloy elements are added to steel for a variety of reasons, among them: to improve the strength and hardenability, or to produce special properties, such as corrosion resistance or stability at high or low temperatures.

18. Alloy elements that are particularly effective in increasing the hardenability of steel in order of decreasing effectiveness are: manganese, molybdenum, chromium, silicon, and nickel. Vanadium and boron are also used in small, but effective quantities .

19. Chromium, vanadium, molybdenum, and tungsten can all be used to impart strength and wear resistance through the formation of stable second-phase carbides.

20. The last two digits in the AISI-SAE designation system for steel indicates the approximate carbon content of the steel in hundredths of weight percent. This is useful information since many engineering properties are directly tied to the carbon content.

21. Letters are added between the second and third digits in the steel designation and at end of the numerical designation.

The letter in the center of the numerical designation indicates an addition to the base metal or the process used to produce the steel. Examples are B and L indicating addition of boron or lead and E signifying steel produced in an electric furnace.

The letter added at the end of the numerical designation indicates the hardenability of the steel.

22. In selecting a steel, it is important to keep use and fabrication in mind. For example, a product that is to be assembled by welding would benefit from a lower carbon content as such would reduce the likelihood of cracking. Additional strength, if desired, would be better obtained through selection of additional alloy elements rather than an increase in the carbon content of the steel.

23. There is a fundamental difference in the way strength is obtained in the HSLA and constructional alloy steels. The high strength/low alloy (HSLA) types rely largely on the chemical composition to develop the desired mechanical properties in the as-rolled or normalized condition. In contrast, the constructional alloys generally develop the desired properties through the use of nonequilibrium heat treatment.

24. Microalloyed steels are steels that contain small amounts of alloying elements like niobium, vanadium, titanium, zirconium, boron, rare earth elements, or combinations thereof and are used as substitutes for heat-treated steels. Attractive strength and hardness is obtained without interfering with the material processing (weldability, machinability and formability) .

25. Microalloyed steels require less cold work to attain a desired level of strength, so the remaining ductility can be greater than with alternative materials. Hot formed products can often be used in the air cooled condition to provide properties comparable to quenched-and-tempered alloys . Machinability, fatigue life, and wear resistance can be superior to alternative materials. Energy savings can be substantial, straightening or stress relieving after heat treatment can be eliminated, and quench cracking is not a problem. Weight can often be reduced in parts, since the strength is increased.

26. Dual phase steels contain ferrite and high-carbon martensite.

27. Dual phase steels are more formable (ductile) than high strength low alloy steels. They are attractive than HSLA steels for making products that require a large amount of deformation in their production, e.g., parts with small radius bends.

28. Free machining steels are basically carbon steels that have been modified by an alloy addition to enhance machinability. Sulfur, lead,. bismuth, selenium, tellurium, and phosphorus have all been added to enhance machinability.

29.When free-machining steels are selected, the ductility and impact properties are somewhat lower than with the unmodified steels

30. Bake-hardenable steels are aging resistant during normal storage, but begin to age during forming, and continue to age while exposed to heat during the paint baking operation. Since strengthening occurs after forming, the forming characteristics are good, coupled with improved product properties.

31. Precoated steel sheets can often be used to offset the high cost of finishing products on a piece-by-piece basis -- a costly and time-consuming approach. Caution must be exercised to protect the coating during fabrication, but this is usually far less than the cost for finishing the individual pieces.

32. The amorphous metals have attracted considerable attention for use in magnetic applications. Since the material has no grains or grain boundaries, the magnetic domains can move freely in response to magnetic fields, the properties are the same in all directions, and corrosion resistance is improved. The high magnetic strength and low hysteresis losses offer the possibility of smaller, lighter weight magnets.

33. Maraging steels are used when super-high strength is the dominant requirement, and acceptable toughness is also needed. Yield strengths are often in excess of 250 ksi with elongations in excess of 11%.

34. The elevated temperature limit for plain-carbon steels is about 250^o or 500^oF

35. Recycling of a material is easier if the material can be easily collected and reprocessed with no major complications.

Steel is widely used so it available for recycling. Steel is magnetic so it can be separated easily from other materials.

Except for high quality, special application steels requiring tight composition controls, steel is easily reprocessed from scrap steel.

36. The corrosion resistance of stainless steels is the result of a strongly adherent chromium oxide that forms on the surface when the amount of chromium dissolved in the metal exceeds 12%.

37. The ferritic stainless steels are the cheapest of the various families. If their properties are adequate, they should be given first consideration when a stainless steel is required.

38. Martensitic stainless steels frequently contain significant amounts of carbon since

they are used in the quenched and tempered structure. The carbon is dissolved in the austenite at elevated temperature and then trapped into the body-centered structure by quenching. Different amounts of carbon provide different levels of strength, as in the plain-carbon and alloy steels .

39. Stainless steels are stainless when there is at least 12% chromium in atomic form that can react with oxygen at the surface. When martensitic stainless steels are slow cooled or annealed the chromium in the steel reacts with other elements and so is not available to react with oxygen at the part surface. The steel is then not stainless since the protective surface reaction layer is not present. The annealed material is subject to red rust corrosion.

Martensitic stainless steels can be made stainless by a quench and temper process. In this type of process reaction between chromium and other alloying additions are limited.

40. Austenitic stainless steels are nonmagnetic and offer superior corrosion resistance to a host of media. Formability is outstanding, and they respond well to strengthening by cold work.

41. Duplex stainless steels have a chemistry and processing designed to produce a microstructure that is a combination of ferrite and austenite, and properties that are often superior to either the straight ferritic or austenitic varieties.

42. Sensitization of a stainless steel is the loss of corrosion resistance that occurs when the local concentration of chromium drops below 12%. This is usually caused by the formation of chromium carbides along grain boundaries. Methods of prevention include: keep the carbon content low, tie up the carbon with an alternative element, and rapidly cool the material through the carbide-forming temperature range.

43. Tool steels are metals designed to provide wear resistance and toughness combined with high strength. They are basically high-carbon steels where the alloy chemistry provides the desired balance of toughness and wear resistance.

44. While the AISI-SAE designation system for plain-carbon and alloy steels is based on material chemistry, the AISI-SAE system for tool steels identifies materials by a letter indicating the primary feature, such as quenching medium, primary application, special characteristic, or specific industry, followed by a number that simply designates the specific member within the family .

45. Air-hardenable tool steels can be hardened by less severe quenches, permitting tighter tolerances through heat treatment and reduced tendency to crack or warp. Applications involving large amounts of costly or precision machining are particularly attractive .

46. Hot-work tool steels generally use additions of the carbide-forming alloys, such as chromium, tungsten, and molybdenum .

47. If alloy cast irons are to be heat treated, the alloy elements are often selected to improve hardenability. If the cast iron is not to undergo heat treatment, the alloy elements are often selected to alter the properties through affecting the formation of graphite or cementite, modifying the morphology of the carbon-rich phase, or simply strengthening the matrix material. Other reasons for an alloy addition might include improving the wear resistance or providing some degree of enhanced corrosion resistance.

Problems:

No problems

Case Study:

Interior Tub of a Top-Loading Washing Machine

1. The present product is currently performing in an adequate manner and has established itself as somewhat of an industry standard. The material is relatively inexpensive, and readily available, but the necessary surface treatment requires considerable energy and handling with the coating, drying and firing, often of multiple layers. The deep drawing of the material will most likely require intermediate anneals, which will further increase manufacturing cost. While both of the above areas include significant possibilities for problems and involve additional cost, it is likely that the coating process would be the most problematic and most costly.

2. The conversion to stainless steel would enhance customer attractiveness, but also eliminate the need for a coating operation. Unfortunately, the stainless is a more costly material, would require more force to deform, and, depending on the particular type, may have poorer formability. Because of the higher forming forces, equipment and tooling would have to be stronger and would therefore be more costly.

3. Because of the superior formability, some form of austenitic stainless steel would be preferred. This part requires conversion from flat sheet to a deep drawn shape, a procedure that will likely require multiple stages of forming. In addition, the austenitic stainlesses offer superior corrosion resistance, and the product will come into contact with a wide spectrum of water qualities, laundry products, and additives, such as chlorine bleach. There is no need for the high strength of the heat-treated martensitic grades, and the less expensive ferritic alloys lack the superior formability of the face-centered cubic structured austenitic material. Because of the spectrum of possibilities, no attempt is made to select a specific alloy.

4. The austenitic stainless steels strengthen considerably when cold worked, and this can be a useful means of achieving the desired strength. However, it is doubtful that the additional strength of cold working is necessary, and the residual stresses imparted by the

deformation may be detrimental in the form of stress-corrosion problems during service .

If the strengthening of cold work is deemed desirable, the effects of the residual stresses could be reduced by taking the material through the recovery stage of the recrystallization process. This reduces the residual stresses while retaining the mechanical properties set by the cold working.

If intermediate anneals are required during the deformation sequence, the effects of prior cold work will not be carried to the finished product. In addition, one consequence of partial cold rolling of the starting material will be to reduce the; ductility of a material being used for an application that requires extensive deformation. It is unlikely, therefore, that the use of prior cold rolling would be appropriate or desirable for this product.

5. It is possible that a surface passivation treatment would be beneficial for this product, but the inherent properties of the stainless should be adequate.

CHAPTER 7
Nonferrous Metals and Alloys

Review Questions

1. Nonferrous metals often possess certain properties not usually associated with ferrous metals, among them being: corrosion resistance, ease of fabrication, high electrical and thermal conductivity, light weight, strength at elevated temperatures and color.

2. The nonferrous alloys are generally inferior to steel in terms of strength and elastic modulus, and possibly weldability.

3. Alloys with low melting points are often easy to cast, using sand molds, permanent molds, or dies.

4. The wide use of copper and copper alloys is largely due to the high electrical and thermal conductivity, high ductility, and corrosion resistance .

5. The relatively low strength and high ductility make copper quite attractive far forming operations. By cold-working, the tensile strength can be raised from about 30,000 psi to over 65,000 psi., with a concurrent drop in elongation from 60% to about 5%. The low recrystallization temperature is attractive when additional cold working is desired.

6. A primary limitation of capper is its high density --heavier than iron. Strength-to-weight comparisons place it below most engineering metals. In addition, some significant problems can occur when the metal is used at elevated temperature.

7. Commercially pure copper is classified as
- electrolytic tough pitch, ETP, copper if it contains 0.02% - 0.05% oxygen,
- oxygen-free high-conductivity, OFHC, copper if it contains much less than 0.02% oxygen.

These two types of copper differ primarily in oxygen content. This difference implies difference in conductivity and differences in production to control oxygen content.

8. The copper-zinc alpha brasses are quite ductile and formable, achieve good strength through cold working and have good corrosion resistance and high electrical and thermal conductivities. Both strength and ductility increase with zinc content up to about 36% zinc. In addition, variations in chemistry can be used to produce changes in color and various platings are easy to apply.

9. Brasses are susceptible to stress corrosion cracking. Stress corrosion requires a hostile environment and stress. The stress acting is a combination of stress due to loading in

service and residual stresses created during processing. To reduce the net stress acting in service, residual stress can be removed or reduced by a stress relief process.

10. The term "bronze" can be particularly confusing. While the term frequently refers to copper-tin alloys, it can be used to describe any copper alloy where the major alloy addition is neither zinc nor nickel.

11. The copper-nickel alloys are particularly well known far their high thermal conductivity and high-temperature strength, coupled with good corrosion resistance.

12. Copper-beryllium alloys can be age hardened to produce the highest strengths of the copper-based metals. In addition to having strengths similar to steel, the alloys are nonsparking, nonmagnetic, and have high electrical and thermal conductivity. Its use has been drastically limited, however, by concerns over the toxicity of the beryllium.

13. Aluminum and its alloys have achieved popularity due to their light weight, high electrical and thermal conductivity, good corrosion resistance, and workability.

14. A given volume of aluminum is about one-third the weight of the same volume of steel. The specific gravity of aluminum is about 2.7 while for steel specific gravity is about 7.9.

In manufacturing operations both cost per unit weight and cost per unit volume are useful quantities. The cost of many metal raw materials and structural shapes that will be converted into finished parts are quoted as cost per weight.

The cost of the finished part includes manufacturing costs and material costs. If the volume of a particular part will be the same whether it is made of aluminum or steel, the relevant material cost for the part is cost per unit volume of material.

15. The electrical conductivity of pure aluminum is approximately 62% that of copper for the same size wire and 200% that of copper on an equal weight basis.

16. Aluminum alloys are inferior to steel in the area of elastic modulus. In addition, the wear, creep, and fatigue properties are generally rather poor.

17. The observed corrosion resistance of aluminum alloys is again the result of a tight, adherent oxide coating, similar to that found in stainless steels.

18. Wrought means “worked” and the wrought aluminum alloys are designed to have properties that are desirable for making worked or formed parts. Mechanical properties that are desirable for making formed parts include low yield strength, high ductility, high toughness, high strain hardening rate if high strength is desired in the finished part.

Cast or casting alloys are designed to have properties desirable for making cast parts. For example, casting alloys have low melting temperature, high fluidity when molten and desirable as-solidified structures and properties.

19. While the four digit number of an aluminum alloy only designates chemistry, the temper designation or suffix denotes the condition or nature of the prior processing history of the material. This can be used to provide a good indication of the structure and properties of the alloy.

20. The high-strength, aircraft-quality" aluminum alloys generally receive their strengthening through an age hardening treatment.

21. Alcad is a composite with a thin layer of corrosion resistant aluminum bonded to a higher strength corer material. The result is a corrosion resistant and high strength material.

22. The aluminum alloys used for permanent mold casting must be designed to have lower coefficients of thermal expansion because the molds offer restraint to the dimensional changes that occur upon cooling. Die casting alloys require high degrees of fluidity and "castability" because they are often cast into thin sections. In addition, many are designed to have rather high as-cast strength under rapid cooling conditions.

23. The aluminum-lithium alloys offer higher strength, greater stiffness and lighter weight than most of the commercial aluminum alloys, coupled with the relative ease of fabrication of aluminum alloys.

24. Magnesium and magnesium alloys can be characterized by poor wear, creep, fatigue, and corrosion resistance properties. The modulus of elasticity is low and the alloys possess limited ductility .

25. The use of magnesium is generally restricted to applications where light weight is very important. Magnesium alloys are best suited for applications where lightness is the primary consideration and strength is a secondary requirement.

26. Classification of metals typically involves specifying the composition (alloying), heat treatment and sometime other characteristics such as addition of base metals and method of production (Question 21 in Chapter 6).

Magnesium alloys classification uses
- one or two prefix letters to specify the two largest alloying additions,
-, two or three numerals that specify the percentages of the two main alloying metals,
- sometimes a suffix letter to denote a base alloy variation,
- sometimes a suffix letter to designate material temper.

27. The forming behavior of magnesium alloys is poor at room temperature, but most conventional processes can be performed when the material is heated to between 450 and 7000P.

28. Magnesium is flammable or explosive when it is in a finely-divided form, such as powder or chips. A critical feature here is the ratio of surface area to volume. In addition, magnesium is flammable when heated above 800^{o}F in the presence of oxygen.

29. The primary application of pure zinc is the galvanizing of iron and steel. The principal use of the zinc-based alloys is in die-casting operations. They are low in cost, have low melting points, do not affect steel dies adversely, and can possess good strength and dimensional stability.

30. Zinc-aluminum casting alloys are designed to have higher strength, hardness and wear resistance and lower melting and casting costs than zinc casting alloys.

31. Titanium and its alloys are strong, lightweight, corrosion resistant, and offer strengths similar to steel at temperatures up to 9000F.

32. The attractive mechanical properties of titanium and titanium alloys are generally retained at temperatures up to 900^{0}F.

33. The nickel-based Monel alloys probably offer better corrosion resistance to more media than any other commercial alloy.

34. Nickel, iron and nickel, or cobalt forms the base metal for the superalloys.

35. when the operating temperature exceeds the limits of the superalloys, exotic materials must be employed, such as TD-nickel or the refractory metals.

36. The refractory metals consist of: niobium, molybdenum, tantalum, rhenium and tungsten.

37. While the eutectic lead-tin alloy offers the lowest melting temperature of the lead-tin solders, the high cost of tin has prompted many users to specify solders with a lower-than-optimum tin content.

38. Beryllium has low density (less than aluminum) and high stiffness (greater than steel) and so parts with high stiffness-to-weight ratio can be design and produced.

39. Graphite possesses the unique property of actually increasing in strength as the temperature is increased. This makes the material attractive for elevated temperature applications, such as electrodes in furnaces.

Problems:

No problems

Case Study:

Nonsparking Wrench

Many safety tools have been made from the copper-2% beryllium alloy, since its age-hardened properties approach and often exceed those of many heat-treated alloy steels. This is fine for small tools where the cost of the material and the weight of the copper alloy (greater than that of steel) are not objectionable. However, with the proposed pipe wrench, both cost and weight may pose serious problems to the acceptance of the tool.

The copper-2% beryllium alloy will likely have to be used in the actual jaws of the wrench, as it is one of the few nonferrous materials that can provide the necessary strength, wear resistance, and fracture resistance for this use. However, the handle, adjuster ring, and moving L-shaped upper jaw will likely have lower mechanical property requirements that could be met by some of the other age-hardenable, higher-strength nonferrous materials. Aluminum alloys, such as 6061, 2014, 2024, 7075, 7079 and others could be forged and heat-treated to produce the handle and jaw components, and copper-beryllium inserts can be installed in the jaws. Alternately, an age-hardenable aluminum casting alloy could be selected and these components could be fabricated by sand, permanent mold, or even die casting. One problem with the use of the aluminum alloy with a copper insert would be the presence of a galvanic corrosion cell (dissimilar metals), which could be aggravated by some of the environments in which tools are typically stored. Since replaceable inserts would be desirable, and the method of assembly would likely involve a removable fastener, electrical contact between the components would be virtually assured. The possible severity of this problem would have to be monitored.

Alternative solutions would not be as attractive. Manufacture of the handle from a less expensive copper-base alloy would reduce cost and significantly reduce the galvanic corrosion problems, but the weight of such a wrench may be objectionable. Smaller wrenches in the series might be made in this manner. Magnesium alloys offer light weight, but lack the necessary strength and rigidity. Titanium alloys are difficult to fabricate (too reactive to easily cast and generally require isothermal forging) . Nickel-base alloys would offer no cost advantage to the copper-beryllium.

Unless the galvanic corrosion problems become excessive in the jaws, the most attractive solution would appear to be a to use copper-beryllium inserts in cast or forged aluminum components. All parts would probably require strengthening through age hardening treatments.

CHAPTER 8
Nonmetallic Materials: Plastics, Elastomers, Ceramics, and Composites

Review Questions

1. Some of the naturally occurring nonmetallic engineering materials are: wood, stone, clay, and leather.

2. The term "nonmetallic engineering material" now includes plastics, elastomers, ceramics and composites.

3 . The term "plastics" refers to engineered organic materials, composed of hydrogen, oxygen, carbon and nitrogen, in the form of large molecules that are built up by joining smaller molecules. They are natural or synthetic resins, or their compounds, that can be molded, extruded, cast, or used as thin films or coatings.

4. Considering a macroscopic piece of plastic/polymer there are two types of bonds within it. Within the molecules themselves the bonding is covalent. This is the primary bonding in the material.

Between the molecules much weaker van der Waals bonds act.

5. A saturated molecule is one to which no additional atoms can be added. If the molecule is a pure hydrocarbon, it contains the maximum number of hydrogen atoms. An unsaturated hydrocarbon does not contain the maximum number of hydrogen atoms.

6. An isomer is one structural form of a given kind and number of atoms that can form in different ways. That is, isomers are different structural arrangements of a given number and kind of atoms and an isomer is one instance of the possible isomers.

7. Polymerization can take place by either addition or condensation. In addition, a number of small molecules unite to form a large molecule with repeated units. Condensation polymerization results in the formation of a polymer and a small by-product molecule .

8. The repeated molecular unit in a polymer molecule is a mer. The degree of polymerization is the average numbers of these units (mers) in the polymer molecule.

9. The terms thermoplastic and thermosetting refer to a material's response to elevated temperature. Thermoplastic materials soften with increasing temperature and become harder or stronger when cooled. The cycle can be repeated as often as desired and no chemical change is involved. In the thermosetting materials, elevated temperatures tend to promote an irreversible condensation reaction. Once set, additional heatings do not

produce softening. Instead, the materials maintain their mechanical properties up to the temperature at which they char or burn .

10. Crystallization of a polymer means that the polymeric molecules align into a repeating, orderly structure. Crystallization occurs in only individual regions of the polymer, not over the entire, macroscopic piece of material.

11. The strength of the thermoplastic materials can be altered by mechanisms that restrict or alter the intermolecular slippage. These mechanisms include: longer chains, polymers with large side groupings, branched polymers, cross-linking, and crystallization.

12. The deformation of thermosetting material requires the simultaneous breaking of numerous primary bonds. Therefore, these materials are strong, but brittle.

13. .Upon subsequent heating, the thermosetting polymers maintain their mechanical properties up to the temperature at which they char or burn.

14. While thermoplastic materials are easily molded, the temperature of the mold must be cycled to permit the molded product to cool and strengthen prior to ejection. In contrast, the mold used to process thermosetting polymers can operate at a fixed temperature, but the molding time is often longer because of the need to complete the curing or "setting" of the resins.

15. Attractive engineering properties of plastics include:
light weight, corrosion resistance, electrical resistance, low thermal conductivity, the variety of optical characteristics, formability, surface finish, low cost, and low energy content.

16. The inferior properties of plastics generally relate to mechanical strength. Yield strength, impact strength, dimensional stability, property retention at elevated temperature, sensitivity to humidity, and degradation under certain forms of radiation are all limiting or undesirable properties.

17. Environmental conditions that may adversely affect the performance of plastics include: elevated temperature, humidity, and ultraviolet and particulate radiation.

18. Additive agents are frequently added to plastics to improve their properties, reduce their cost, improve their moldability, and impart color.

19. Filler materials are added to molded plastic to: improve strength, stiffness, or toughness; reduce shrinkage; reduce weight; or provide cost-saving bulk.

20. Common filler materials for plastics are wood flour, cloth fibers and particles, glass fibers, mica and inorganic materials such as talc and clay. They are intended primarily to improve mechanical properties of the polymeric material and in some cases to reduce cost by including a low cost volume fraction in the higher cost plastic.

21. Stabilizers or antioxidants are added to plastics to reduce long term degradation of the polymer due to factors such as heat and radiation.

22. Oriented plastics are intended to have increased strength in a particular direction.

23. The "true engineering plastics" offer improved thermal properties, first-rate impact and stress resistance, high rigidity, superior electrical characteristics, excellent processing properties, and little dimensional change with temperature or humidity. They offer a balanced set of engineering properties.

24. Plastics have replaced glass in containers and flat glass. PVC competes with copper and brass in pipe and plumbing fittings. Plastics have replaced ceramics in sewer pipe and lavatory facilities. New automotive uses include engine components and fuel tanks and fittings.

25. With the amount of a particular type of plastic that is recycled being an indicator of ease of recycling, polyethylene terephthalate (PET) and high density polyethylene are the easiest to recycle.

26. Mixed plastics contain multiple types of resins, fillers and colors, and may mix thermoplastics and thermosets. Most, however, have the same physical properties, making separation extremely difficult.

27. Elastomers are a class of linear polymers that display an exceptionally large amount of elastic deformation when a force is applied, frequently stretching to several times their original length. In these materials, the long polymer chain is in the form of a coil, which elastically uncoils and recoils in response to loads.

28. By cross-linking the molecules, it is possible to prevent viscous deformation, while retaining the large elastic response. The elasticity or rigidity of the product can be determined by controlling the number of cross-links. Small amounts of cross-linking produces soft, flexible material. Additional cross-linking makes the material harder, stiffer, and more brittle. Thus the properties of an elastomer can be tailored through control of the amount of cross-linking.

29. Natural rubber is an organic material and so its strength is very sensitive to temperature and its structure is degraded by solvents such as petroleum based oil, gasoline and naphtha and radiation energy.

30. The outstanding physical properties of ceramics include their ability to: withstand high temperatures, provide a variety of electrical properties, and resist wear.

31. The crystal structures of ceramic materials are frequently more complex than those for metals because atoms that differ greatly in size must be accommodated within the same structure and interstitial sites become extremely important. In addition, charge

neutrality must be maintained throughout the structure of ionic materials. Covalent materials can only have a limited number of nearest neighbors - forcing inefficient packing and low density.

32. Amorphous or noncrystalline ceramics are often called glasses, and said to be in a glassy state or have a glass structure.

33. The refractory ceramics are materials that are designed to provide acceptable mechanical and chemical properties while at high temperatures .

34. The dominant property of the ceramic abrasives is their high hardness.

35. Glass products are formed by heating the feed stock or initial workpiece and then mechanically shaping it at the elevated temperature. Examples of forming techniques are mechanical forming using paddles and blowing of hollow shapes.

Machinable ceramics have been developed but these are typically called ceramics, not glasses.

36. Cermets are combinations of metals and ceramics that are bonded together in the same manner in which powder metallurgy parts are produced. They combine the high refractory characteristics of ceramics and the toughness and thermal shock resistance of metals.

37. Ceramic materials generally do not exhibit their potentially high tensile strength because small pores or flaws act as stress concentrators and their effect cannot be reduced by plastic flow.

38. The mechanical properties of ceramics generally show a wider statistical spread than the properties of metals since the size, number, shape and location of the flaws is likely to differ from part to part, inducing failure at very different applied loads.

39. Even if all of the flaws or defects could be eliminated from the structural ceramics, the materials would still fail by brittle fracture with little, if any, prior warning. Thermal shock may be a problem, cost would be high, joining to other materials is difficult, and machining limitations favor net-shape processing .

40. The structural ceramic materials include: silicon nitride, silicon carbide, partially stabilized zirconia, transformation-toughened zirconia, alumina, sialons, boron carbide, boron nitride, titanium diboride, and ceramic composites.

41. Sialon is stronger than steel, extremely hard, and light as aluminum. It has good resistance to corrosion, wear and thermal shock, is an electrical insulator, and retains good tensile and compression strength up to 2550^{o}F. In addition, its thermal expansion is quite low compared to steel or polymers. When overloaded, however, it will fail by brittle fracture.

42. Some of the ceramic materials currently being used as cutting tools include: silicon carbide, cobalt-bonded tungsten carbide, silicon nitride, cubic boron nitride, and polycrystalline diamond. The ceramic cutting tools offer low wear rates, low friction, high rates of cutting, and long tool life.

43. A composite material is a heterogeneous solid consisting of two or more components that are mechanically or metallurgically bonded together. Each of the components retains its identity, structure and properties, yet by combining the components, unique properties are imparted to the composite.

44. The properties of composite materials generally depend upon: the properties of the individual materials; the relative amounts of the components; the size, shape and distribution of the discontinuous components; the degree of bonding between the components; and the orientation of the various components.

45. The three principal geometries of composite materials are: laminar or layer-type, particulate, and fiber-reinforced.

46. A bimetallic strip consists of two metals with different coefficients of thermal expansion bonded together as a laminate. Changes in temperature produce a change in shape.

47. The attractive aspect of the strengthening that is induced in the dispersion-strengthened particulate composites is the stability and retention that is observed at elevated temperatures. The particles are selected to be insoluble in the matrix material, their effect persists to temperatures much higher than for the naturally-occurring two-phase materials.

48. Due to their unique geometry, the properties of particulate composites are usually isotropic. This is usually not true for the laminar, whose properties differ perpendicular and within the plane of the laminate. Fiber-reinforced composites, may or may not be isotropic depending on the length and randomness of the orientation of the fibers.

49. In a fiber-reinforced composite, the matrix supports and transmits loads to the fibers, and provides the ductility and toughness. The fibers, on the other hand, provide strength by carrying most of the load.

50. Common fibers used in fiber reinforced composites are nylon, rayon, Kevlar, glass and graphite. Since the matrix protects the fibers from fracture initiation and growth conditions in use, brittle materials can be used as the strength producing components of composites.

51. In a fiber-reinforced composite, the fibers can be in a variety of orientations: short, random fibers; unidirectional fibers; woven fabric layers; and complex 3-dimensional weaves.

52. Tbe properties of fiber-reinforced composites depend strongly upon: the properties of the fiber material, the volume fraction of fibers, the aspect ratio of the fibers, the orientation of the fibers, the degree of bonding between the fiber and the matrix, and the properties of the matrix.

53. Compared to metals, the metal-matrix composites offer higher stiffness and strength and a lower coefficient of thermal expansion. Compared to the organic matrix materials, they offer higher heat resistance as well as improved electrical and thermal conductivity .

54. In a ceramic matrix composite, the fibers add directional strength, increase fracture toughness, and improve thermal shock resistance.

55. Current limitations to the extensive use of composite materials in engineering applications include: the high cost of the material, the intensity of labor required for fabrication, and the lack of trained designers, established design guidelines, information about fabrication costs, and methods of quality control and inspection. In addition, it is often difficult to predict interfacial bond strength, strength of the composite, response to impacts and probable modes of failure. There is concern about heat resistance, sensitivity to various environments, and instability of properties. Repair, maintenance, and assembly are difficult or require special procedures.

56. Composites are quite attractive for aerospace applications because they offer high strength, light weight, high stiffness, and good fatigue resistance.

Problems:

1. a). Some of the desirable features for a submarine material are high strength (to withstand water pressure), fracture resistance (to withstand possible impacts), corrosion resistance (to both fresh and salt water), and the ability to be fabricated into a leak-tight assembly (possibly using techniques like welding) . Possible materials would include high-strength steels, titanium alloys, and possibly nickel-based alloys.

b) For aerospace applications, concerns focus on areas such as: light weight, strength-to-weight ratio, fatigue resistance, and ease of fabrication and ability to fabricate in small production quantities .

c) Engineers are constantly pushing the limits of engineering materials. Some current targets that are presently unattainable include: (1) reuseable rocket engines that, can withstand temperatures in excess of 4000^0F, stresses and severe vibrations, and (2) light weight wing skin materials for hypersonic aircraft that will withstand temperatures in excess of 1800^0F, and be resistant to fracture, fatigue and corrosion.

Since these applications both require elevated-temperature properties, they will likely be addressed through ceramic materials, the family of intermetallic compounds, or even the high-temperature metals (although these are sufficiently heavy as to be inappropriate for the airplane use) . Any use of polymers would be highly unlikely at the specified temperatures.

2. This is an open-ended problem, but numerous examples can be considered, such as: (1) window frames (wood, metal, vinyl); (2) lavatory basins (metal, cast polymer, ceramic whiteware); and (3) window cranks for autos or mobile homes (die cast plastic or die-cast zinc) .

3. Coated cutting tool preparation is described in Section 22.2.

The performance of the coating is in machining, in contrast to performance in mechanical and chemical tests related to expected performance in machining, e.g., hardness, hot hardness (e.g., Figure 22-3, Table 22-1), corrosion. Using the information available in Chapter 22 enables a comparison of performance in terms of tool wear/tool life in machining.

	Deposition conditions	Performance
TiC	chemical vapor deposition 1000°C 1800°F initial heating in inert atmosphere	cutting speed – up to 1200 sfpm, Fig 22-1 n = 0.33, page 537
TiN	chemical vapor deposition preferred – as above - or physical vapor deposition (reactive sputtering, reactive ion plating, arc evaporation) 200-485°C, 400-900°F in vacuum	cutting speed – up to 1200 sfpm, Fig 22-1 n = 0.35, page 537
Al_2O_3	alumina compacts made by compaction and sintering 267 – 286 MPa, ~40,000psi ~ 1000°C, 1800°F alumina coatings	cutting speed – up to 1200 sfpm, Fig 22-1 n = 0.40

Maximum useful cutting speeds are about the same for all materials. Based on the value of n which is the exponent in the Taylor Tool Life equation aluminum oxide cutters will have the longest tool life followed by titanium nitride and then titanium carbide.

Mechanical properties will enter in determining tool performance in specific machining operations. For example, the brittle aluminum oxide tool is expected to perform poorly in interrupted cutting such as milling due to varying cutting forces and temperature cycling.

4. Ceramics are hard, strong, brittle materials. Oxides are chemically stable. These materials have low thermal conductivity. Ceramic parts are made in high temperature compaction followed by sintering and finishing processes, Section 8.4. Residual voids in the part, coupled with the inherently brittle ceramic materials, usually results in brittle materials.

a. With respect to part manufacture these material characteristics have important implications. Compaction of a ceramic part before sintering requires application of high pressure. This implies difficulties for production of large parts since this implies the need for high pressure, high load, high stiffness machinery. Compaction requires high strength dies and formed parts have to be removed from the die so complex shaped parts may not be feasible to manufacture. Mechanical manufacturing processes such as forming and machining produce a part by controlled deformation of the work material. The brittleness of typical ceramics means that they will fracture during production processes except in processes in which very little deformation is needed to produce the part. In many finishing operations such as machining brittle materials fracture leaving rough surfaces subject to fracture initiation at the sharp nonuniformites in the surface. (There is recent development of ductile regime machining/grinding in which small depths of cut are used and ductile workpiece deformation is produced.) The low thermal conductivity of ceramics means that extreme temperature gradients can arise in high speed deformation processes. Relatively low processing speeds may be required, e.g., low grinding speed, low depth of cut. Further, the low thermal conductivity of ceramic parts will present problems when these parts mate with metallic or other material parts with high thermal conductivity. The chemical stability of ceramics implies that joining processes will be difficult.

These kind of arguments lead to the conclusion that the primary limitations to the production of a ceramic engine are that only relatively small, simple shape parts that require little finishing can be easily produced, Figure 8-7. Small ceramic parts are finding their way into traditional internal combustion engines, e.g., valve guides, turbocharger impellers.

b. To make the small, simple shape parts most of the technical ceramics materials (in contrast to the fine ceramics and glasses) can be used, given that the part will be made. That is, if a ceramic part can be realistically produced in the face of limitations such as those described above, most common ceramics that can be sintered can be used.

c. As discussed in part a above, part design and production processes in which little deformation is needed to produce relatively small, simple shape parts are expected to be successful when manufacturing ceramic parts. This implies net final shape compaction and sintering followed by finishing processes that remove only small amounts of material. The hardness of ceramics also indicates small material removal finishing operations using hard tools, e.g., grinding, lapping polishing.

d. For the manufacture of ceramic parts

- with respect to material properties materials that exhibit as much plastic deformation as possible are desirable. This will lead to being able to process the materials in conventional processes that typically impose significant deformation on the workpiece.
- with respect to processes, processes that do not impose large scale deformation will be useful since they will avoid the fracture associated with deforming brittle materials.

Case Study:

Two-Wheel Dolly Handles

There is considerable variability to this problem, but concerns should address the durability, impact resistance when dropped on the handles, and the ability to withstand high localized stresses (such as at the bolt holes) without cracking or fracture. Since the product may be used on outdoor loading docks in mid-winter, critical properties must be present at low temperatures -- a possible problem for polymeric materials.

A number of alternatives are possible, including such techniques as the injection molding of polymeric material containing chopped fibers, and others. Since the design was made for casting, one might expect incorporation of pattern-removal draft, and a preference for uniform thickness or section size.

CHAPTER 9
Material Selection

Review Questions

1. Exceeding product requirements will usually involve using different materials and possibly different manufacturing processes to produce the product. Changes (higher quality materials and operations to work them) in materials and processes may result in higher costs. Using different materials and processes may also require the acquisition of new knowledge, understanding and experience – the development of new knowledge bases for materials and processes.

2. In a manufacturing environment, the selection and use of engineering materials should be a matter of constant reevaluation. New materials are continually being developed. Others may no longer be available. Prices are subject to change and fluctuation. Concerns regarding environmental pollution, recycling, and worker health and safety impose new constraints. The desire for weight reduction, energy savings, or improved corrosion resistance may require a material change. Increased competition, the demand for improved quality and serviceability, and negative customer feedback may all prompt review and evaluation. Finally, the climate of product liability demands constant concern for engineering materials.

3. Recent shifts in the materials used in automobiles show increased use of lighter weight materials and high-strength steels, as well as plastics and composites. Early automobiles made extensive use of wood, and some early fenders were made of leather .

4. The development, substitution and use of materials in aerospace applications are generally driven by the need for improved strength-to-weight ratio and high temperature resistance. Some of the newer materials used for improved strength with light weight are high strength, light weight metal alloys such as aluminum-lithium alloys, metal-matrix composites, polymer-matrix composites, carbon fiber composites. The refractory superalloys and newer titanium alloys are being used where maintaining strength at high service temperatures in important.

5. There is a distinct interdependence between engineering materials and the processes used to produce the desired shape and properties. A change in materials will often require a change in manufacturing processes; and improvements in processes may lead to a reevaluation of materials.

6. At a very high level of description, engineering design is specifying what material to use and how to distribute it in space to provide a specified function(s). Design should also include manufacturing considerations – how to produce the part or product.

In more detail, design is detailed specification of

- what to produce based on quantitative performance measures,
- the required material and geometric properties,
- the material(s) to use,
- and the related issues of manufacturing process selection.

Design is often specific to a part of the overall product production activity, e.g., part design, process design, manufacturing system design. All of these kinds of activities are related and should be integrated in the product production enterprise.

7. The three usual phases of product design are: conceptual design, functional design and production design. Consideration of material is of almost no concern in the first phase; is of importance in the second phase in that suitable materials must be available and selected; and in the third phase, the exact materials to be used must be related to the production processes and to the tolerances required and the cost.

8. If one does not require that prototype products be manufactured from the same materials that will be used in production and by the same manufacturing techniques, it is possible to produce a perfectly functioning prototype that cannot be manufactured economically in the desired volume or one that is substantially different from what the production units will be like. By using the same material and process, the prototype will provide a true assessment of the performance and manufacturability of the product.

9. New materials should be evaluated very carefully to assure that all of their characteristics are well established. Numerous product failures have resulted from new materials being substituted before their long-term properties were fully known. when changing a process, it is important that the effect of the process on the properties of the material be known and acceptable .

10. The "case-history" approach has several pitfalls. First, minor variations in service requirements may well require different materials or different manufacturing operations. In addition, this approach precludes the use of new technology, new materials, and other manufacturing advances that may have occurred since the formulation of the previous solution.

11. The most frequent problem that arises when seeking to improve an existing product is to lose sight of one of the original design requirements and recommend a change that in some way compromises the total performance of the product.

12. A thorough job of defining needs is the first step in any materials selection, and all factors and possible service conditions should be considered. Many failures and product liability claims have resulted from simple engineering oversights or failure to consider all types of reasonable product use.

13. Dimensioned sketches show the desired end result shape. Since the shape is explicitly specified and the means of producing it are not specified, the specified shape has numerous implications. These implications extend from possible redesign of the part by

making it a combination of simpler shapes to the part shape determining possible manufacturing processes, e.g., prismatic and cylindrical parts will be made using different types of processes, perhaps milling and lathe turning.

Dimensioned sketches probably specify shape, dimensions and perhaps tolerances. Part performance determining characteristics such as required surface finish (surface shape) may not be specified. Surface finish requirements will determine the kind of processes that can produce the required surface and the possible need for more than one process as in turning and then grinding a shaft.

Overall shape also may be inadequate for specifying part characteristics for parts used in assemblies. When parts have to mate with other parts dimensional and geometric (shape) characteristics are important. The natural variations in them when large numbers of parts are being made become important. Part accuracy and precision and the allowable variations in them during manufacture are probably not shown on a dimensioned sketch.

14. Material properties change with temperature and so specifying the required mechanical properties for a design/part/product has to include changes in properties that result from
- the temperature in use,
- variations in temperature as thermal cycling can cause stress cycling if the part is constrained.

Also, the rates of many chemical, physical and mechanical processes vary with temperature. For example, the effective strength of a part changes with corrosion and corrosion rate varies with temperature.

15. The compatibility of a product to its service environment is absolutely necessary for its success. Some considerations should include: highest, lowest, and normal operating temperatures, and the nature of any temperature changes; possible corrosive environments; desired lifetime; and the anticipated level of maintenance or service.

16. In design many manufacturing concerns arise and should be considered as part of the design process, for example,
- part production quantity and required production rate as this affects the type of machine tools that can be used,
- part quality since different manufacturing processes have different capabilities,
- part test and inspection requirements as these are included in most manufacturing operations,
- part mating requirement for assembly,
- part disassembly requirements related to repair, disposal, recycling,
- part section changes since they affect part handling in sequences of processes and in assembly,
- use of standard sizes for part features since this may enable use of standard size tooling,
- material selection criteria that include ease of manufacture, e.g. use of easy to machine, machinable, or easy to form, formable, materials.

17. Although there is a tendency to want to jump to "the answer", it is important that all factors be listed and all service conditions and uses be considered. Many failures and product liability claims have resulted from simple engineering oversights or the designer not anticipating reasonable use for a product or conditions outside of the specific function for which he designed it.

18. All factors have to be considered since each and every one can have an effect on performance and so on the quality of the product. In addition, interactions between design factors, between service conditions and between all design factors and in-use conditions should be considered, e.g., the interactions of stress due to static and dynamic loading and environment of sea-based structures since stress corrosion cracking is an important issue.

19. "Absolute" requirements are those for which no compromise or substitution can be permitted. "Relative" requirements are those which can be compromised to some extent.

20. Handbook-type data is obtained through the use of standardized materials characterization tests. The conditions of these tests may not match with those of the proposed application. Significant variation in factors such as temperature, rates of loading, and surface finish can lead to major changes in material performance. In addition, the handbook values often represent an average, and the actual material properties will vary on either side of that value.

21. While cost is indeed an important consideration, it may be desirable to first demonstrate that the material or materials meet all of the necessary requirements. If more than one candidate emerges, then cost becomes a factor. If only one is satisfactory, then one must determine if its cost is acceptable.

22. Barbell weights should be evaluated on a cost per pound basis. Parts with fixed size, like door knobs should be evaluated on a cost per cubic inch basis. There are numerous other examples.

23. Product failures can provide valuable information. By identifying the cause of the failure, the engineer can determine the necessary changes that would be required to prevent future occurrences. Failures of similar parts in similar applications can provide additional information.

24. In selecting a material, one should consider the possible fabrication processes and the suitability of the various candidate materials to each process. All processes are not compatible with all materials. The goal is to arrive at the best combination of material and manufacturing process for the particular product .

25. In general, decisions about a material or process to be used influence the other. Processing options for materials depend on the material selected. In an extreme case, the specification of a material may result in not being able to process it with available equipment. For example, if a highly temperature resistant material has to be used for a part there is no choice but to obtain the machines and tooling capable of processing the

material or finding a source for part manufacture. The only way rational manufacturing planning can be done is if this is realized at the part design stage.

Conversely, if available manufacturing machines have to be used, only materials that can be processed are feasible options.

Further, if the processes to be used changes material characteristics the extent of the effects on different materials has to be considered in material selection. For example, a residually stressed surface layer is produced in machining. Some metals are more strain hardening than others and so the level of residual stress produced will be different.

Since part or product cost depends on both material and processing costs, specification of a material determines part of the manufacturing cost.

26. Since a wide range of knowledge is needed in all aspects of
- material properties and behavior,
- the capabilities of manufacturing processes,
- and the effects of processing on material structure, properties and performance,
multiple individuals will probably be involved in material and process selection.

27. Material substitution problem example:
The replacement steel automobile body panels with new high strength, low alloy steel resulted in thinner, lighter body panels of essentially the same strength. However, the less corrosion resistant, thinner HSLA steel panels rusted through more quickly.
Initial replacement of cast iron engine blocks with aluminum block resulted in lighter engines but with less damping. Vibration became a problem, subsequently solved.

28. Product liability cases have resulted from a number of reasons, most commonly: failure to know and use the latest information about the material used, failure to foresee and take into account reasonable uses for the product, use of materials about which insufficient data is known, inadequate quality control, and material selection made by unqualified people.

Problems:

1. Based on the chart below, material Y has the highest rating number. However, because it does not have satisfactory weldability and this is an "absolute" requirement, it should not be selected. Material Z should be used.

Material Characteristic
1. Corrosion
2. Weldability
3. Brazability
4. Strength
5. Toughness

6. Stiffness
7. Stability
8. Fatigue
9.As-welded Strength
10. Tensile Strength
11. Cost
R = Material Rating Number

	Go – No Go			**Relative Rating Number**								**R**
	1	2	3	4	5	6	7	8	9	10	11	
X		S				3x1	3x4	2x5		3x4		**37**
Y		U				3x1	5x4	3x5		5x4		**58**
Z		S				3x1	3x4	5x5		2x4		**48**

2. The problem specifies performance and durability as factors to be considered. Chalk trays have few performance requirements and so the Rating Chart is simple. Durability is also not a complex issue. The manufacture of the tray is considered in the next part of the discussion.

With the simple performance and durability concerns it is reasonable to simplify the Rating Chart by making all requirements Go – No Go except for cost. Or, to use weighting factors for all with the probable result that cost will be the overriding factor and then the Rating Chart can be redone as No – No Go except for cost. This Go – No Go versus weighting is somewhat analogous to the distinction of Variable and Attribute testing discussed in Chapter 10.

Material	Go – No Go Screening				Weight	Rating
	Cross section shape	Paintable Finishing	Ease of Cleaning	Can be cut to length, joined	Cost 1 = low 5 = high	
Wood	S	S	S	S	2	
Aluminum	S	*	S	S	2** 4**	
Plastic	S	S	S	S	1	

S = Satisfactory, U = Unsatisfactory,
* limited range of anodized colors and this is reflected in cost
** cost for metallic finish
*** cost for anodized colors

With only the cost criterion distinguishing the choices available funds and subjective appearance and look-and-fell will determine choice.

The “continuous cross section” in the problem statement indicates the same cross section along the tray length. Two issues arise; the cross section shapes that need to be produced and the desirability (production rate and manufacturing cost) of producing parts in a continuous manner.

Wooden trays can be made by machining long pieces of work material in a shaping operation. Cutters can be ground to the desired shape, mounted on the shaper arbor and the long workpieces fed past the cutter. A series of cutting heads or machines will probably be required to sequentially change the initial, perhaps rectangular, cross section to the final cross section shape. Molders are similar machines used to produce wooden moldings. Cutting speeds (speed of the cutting edge through the work material) for wood are high as is the feed speed, the rate at which the workpiece moves past the cutter.

The machining process produces a finished surface that in sophisticated, well run operations may be smooth enough to paint of finish with some other coating. If the surface is not sufficiently smooth subsequent abrasive finishing may be required. In addition to the finished surface shavings or chips are produced. This is a low value by-product even if it is used in other reconstitutes wood products such as flake board. And, the chips may have to be further processed for some products such as oriented strand board.

In contrast to wood that cannot be easily formed, aluminum ductility enables it to be formed in extrusion and rolling processes (Chapter 18), perhaps at elevated temperature. Both processes are continuous in the sense that long sections of product can be formed from standard size and shape feedstock. Since complex, hollow shapes can be extruded, extrusion is a logical choice for chalk tray production. Long sections can be cut to length. Joining sections such as at a corner is not a problem since the tray is not a load bearing structure and so load transference is not needed. Smooth corner joints with the sections simply butted up against each other is a adequate.

Long shaped sheet metal parts can be continuously produced in roll forming, Chapter 19. Depending on the cross section shape required and the tray section thickness roll forming may be feasible. Qualitatively, thick sheet deformed to a tight bend radius will fracture on the outside of the bend and wrinkle on the inside surface of the bend. Steel rain gutters are roll formed (usually on-site) since the initial sheet workpiece is thin.

High forces are needed to extrude aluminum through a complex geometry die and so strong, stiff machines and tooling is required. If plastic trays will suffice they can be produced from potential less expensive plastic in a less complicated plastic extrusion machine, Chapter 20. Plastic rain gutters are extruded.

3. This is considered in the Case Study in Chapter 3

4. The explanation given for the better performance of newer turbine blades is in terms of typical polycrystalline cast material versus single crystal turbine blades. So, the materials used must have adequate high-temperature, high-stress properties and behavior. The material-manufacturing process pair must be capable of producing large single crystal products.

At the time of preparation of this solutions manual
a search for jet & engine & turbine & blade & casting produced

www.cmse.ed.ac.uk/AdvMat45/SuperEng.pdf that presents overviews of
- the pressure, temperature operating environment in jet engines,
- the failure modes of engine components,
- jet engine design,
- material strengths as a function of temperature

leading to the development of Ni-based superalloys up to the current alloys and their characteristics. Explanation of mechanical behavior in terms of composition and microstructure are presented.

Microstructures are shown – equiaxed crystal structure, directionally solidifies, single crystal. The advantages and use of coatings is covered.

The production of single crystal blades by using a "spiral selector" that allows the nucleation and growth if only one crystal is illustrated.

www.msm.cam.ac.uk/phase-trans/2001/slides.IB/photo.html provides an explanation of creep behavior in terms of the grain boundaries in a metal part and shows photographs of turbine blades with the same composition but produced by
- casting,
- directional solidification,
- directionally solidified using a spiral mold section that allows production of a single crystal blade.

The general conclusions that can be drawn are that
- the inherent strength of material is determined by their composition and structure,
- high strength materials have been designed and developed using fundamental engineering science knowledge about composition and composition-structure relations,
- in product design the in-use conditions have to be considered when specifying required strength of materials,
- in-use conditions may lead to various failure mechanisms,

--- in jet engines, high temperature results in lowering material strength and also creep and corrosion arising as important types of failure.

More specifically,
- loading applied at elevated temperatures makes material strength and deformation behavior more dependent on grain boundary behavior (strength decreases, creep and corrosion),
- one way to increase material high temperature performance is to produce alloys and microstructures that limit grain boundary effects such as diffusion along grain boundaries and grain boundary sliding,
- another way to limit grain boundary effects is to control the size of grains and the orientation of the boundaries - directional solidification,

- another possibility is to eliminate grain boundaries, - single crystals.

In order to produce desired product behavior by using engineered materials (composition and structure), special, new manufacturing processes may have to be developed. In the case of single crystal jet engine turbine blades a process was developed in which
- the fundamental concept is to make only one crystal available for growth,
- and to set crystal growth conditions so that growth of one crystal occurs without the nucleation of other crystals.

One example of a process to do this is shown.

An example of Nondestructive Evaluation (X-ray) is shown at
www.sv.vt.edu/xray_ct.html

Case Study:

Material Selection

This is an open-ended and extremely variable problem that is designed to get the student to question why parts are made from a particular material and how they could be fabricated to their final shape. In addition, they are asked to consider the need for property modification via heat treatment and/or surface treatment, and should begin to recognize the need to properly integrate these operations in the manufacturing sequence. The specific answers received will depend not only upon the specific product or products chosen but also upon the background and perception of the student.

CHAPTER 10
Measurement and Inspection

Review Questions

1.In order for parts to be interchangeable, they must be manufactured to the same standards of measurement. Simply put, everybody's definition of an inch or a centimeter must be the same identical measurement. In addition, certain sizes and shapes (like threads on a shaft or teeth on a thread) are standardized. Thus, all spark plugs for automobile engines have a standard diameter size and thread shape to fit into everyone's sockets. Standardization is fundamental to interchangeability and interchangeability is fundamental to repetitive part manufacture and mass production.

2. The least expensive time to make a change in the design is before the part is being made. Putting the manufacturing engineering requirements into the design phase helps insure that the part can be economically fabricated.

3. Attributes inspection trys to determine if the part is good or bad. Variables inspection requires a measurement be made to determine how good or how bad and thus, more information about part quality is obtained. If your car has an oil pressure gage, you always know what the oil pressure is (variables), but if it only has a warning light, you only know whether the pressure is good (no light) or bad (light comes on).

4. Warning lights (usually red) readily alert the driver to a bad situation, whereas the driver may completely ignore a low gage reading. The driver may not even know what a bad reading is or that a dangerous condition exists, or worse, what the gage is actually informing him or her about. Most cars today have both kinds of inspection devices to keep the driver informed. Sometimes the decision to change is based on economics as attributes gages are usually less expensive than variables types.

5. The four basic measures are: length, time, mass, and temperature .

6. Referring to Figure 10-1, the Pascal is a measure of pressure in SI units. Pressure is the force per unit area and its dimensions are newtons per square meter (N/ m^2) in SI units or psi in English units. This unit is named after Blaise Pascal (1623-1662), a French mathematician and scientist who developed the following principal - a pressure applied in any portion of the surface of a confined fluid is transmitted undiminished to all points within the fluid - Pascal's principal.

7. The grades of gage blocks are laboratory, precision, and working - in decreasing level of accuracy. The blocks come in sets so that they can be "wrung" together into any length needed from 0.1001 to over 25 inches in increments of 0.0001 inch.

8. The surface tension of an ultrathin film of oil between the very smooth, flat, block faces keeps the blocks locked together. Because they are so smooth and in such intimate contact, they can actually weld together via diffusion if left in contact for prolonged periods of time.

9. The allowance determines the desired basic fit between mating parts. Tolerance takes into account deviations from a desired dimension and fit, and are necessary in order to make manufacturing practicable and economical .

10. (a) Sliding fit would be too loose and wring fit, too tight - therefore, snug fit, hand assembled. (b) Obviously, a sliding fit as the speed is very low. (c) Free fit with liberal allowance as speeds are high and so are pressures.

11.

Hole Basis	Shaft Basis	Fit Description	Example
H11/c11	C11/h11	Loose-running	door hinges
H9/d9	D9/h9	Free-running	pulley held on shaft by set screw
H8/f7	F8/h7	Close-running	keyed gear on shaft
H7/g6	G7/h6	Sliding	folding knife pivot
H7/h6	H7/h6	Locational-clearance	flat electrical cable connectors
H7/k6	K7/h6	Locational-transition	tapered shank drill – lathe tailstock
H7/n6	N7/h6	Locational-transition	locating pins between cylinder and crankcase on single cylinder engines
H7/p6	P7/h6	Locational-interference	ball bearing inner race on shaft
H7/s6	S7/h6	Medium-drive	cast iron drive gear on shaft
H7/u6	U7/h6	Force	steel drive gear on shaft

12. A shrink fit is permanent, but can be disassembled by proper heating and/or cooling of the members. The word shrink implies that one element is heated (to expand it) and the other is cooled (to shrink it). Then the elements are joined to form a shrink fit. A weld is absolutely permanent -- cannot be disassembled without ruining the parts.

13. To determine the aim of a process, one needs measures of accuracy. To determine

the variability in a process, one needs measures of precision. Accuracy is measured by distribution means and precision is measured by variances or standard deviations (square roots of variances) . A process capability study is usually performed by taking samples of the output from the process and measuring them for the desired characteristic.

14. Interferometry is an example of an optical inspection.

15. The factors should include the rule-of-ten, linearity, repeat accuracy, stability, resolution and magnification, the type of device, the kind of information desired (attributes or variables), the size of the items to be measured, the rate at which they must be measured, and the economics of buying, installing, and using the device.

16. Determining repeat accuracy is easy. Just step on the scale and step of f numerous times and take readings. Determining linearity requires that you have a set of standard weights which you can load on and off -- say 10, 50, 90, 130 etc. pounds -- and plot linear loads versus readings. Generally, scales and other measuring devices are nonlinear at the ends of the scale and linear in the central area.

17. Variable with student. The experiment should show that magnification amplifies the measurement while resolution refers to the limit of detection.

18. Magnification of the output of a measuring device beyond the limits of its resolving capability is of no value. Magnification of a photographic negative beyond the size of the silver halide grains results in grainy photographs. Every measuring device has a limit to its resolving capability. All the magnification in the world will not change that limit.

19. Parallax is the apparent change in the position of an object when it is viewed from a different direction, i.e. the position from which the object is viewed has an effect on the apparent position of the object. Tennis linesmen want to maintain their position so that the apparent position of the ball does not change due to the linesman moving his/her position. The linesman looks right down the line and tries not to move his/her head. A spectator with a different viewing angle than the line judge will see an apparently different ball position.

20. The measuring instrument should be an order of magnitude (10 times) more precise than the object being measured. This rule actually refers to the gage capability. Gage capability is determined by gage R&R studies. See Statistical Quality Design and Control by Devor, et al.

21. The 25 divisions of the moveable vernier plate are equal in length to the 24 divisions on the main scale. Thus each division on the vernier equals 1/25 of .6 or .024 inches. Each division on the main scale is equal to 1/24 of an inch or .6 or 0.025 inches. Thus each division on the vernier is 0.025 - 0.024 = 0.001 inches less than each division on the main scale.

22. The micrometer is sensitive to the closing pressure and the lack of pressure control. Errors in analogue devices are also made by misreading the barrel by a factor of 0.025.

23. They are both about the same order of magnitude in terms of their precision and repeatability, but the micrometer has a limited size range and, thus, must be purchased in sets (quite expensive), whereas a vernier can measure a wide range of sizes with one device. The micrometer is more rugged and better suited for the industrial setting (shop floor). It is also less sensitive to dirt and it is easier to teach someone how to read it.

24. The device tends to lift itself off the surface if too much torque is applied.

25. The equation for thermal expansion is
$\Delta l = \alpha \Delta T$
where Δl is the change in length for a given change in temperature ΔT and α is the coefficient of thermal expansion ($11 \times 10^{-6}/{}^0C$)
and 1 is the length of the bar (2 feet). $20\ {}^0F = 6.67^0C$ and 2 ft = 24 inches.
Therefore:

$$\Delta l = 11 \times 10^{-6} \times 24 \times 6.67 = 0.017768 \text{ in.}$$

which is well within the measuring capability of a supermicrometer. However, don't forget that the supermicrometer will also expand (or contract) with this temperature change, so if you tried this experiment, you would not get this reading unless only the steel bar expanded, not the supermicrometer itself. You can detect a change in length of a bar with a supermicrometer simply due to heating with your hands.

26. Optical means are used so that nothing touches and thus distorts a delicate part.

27. Parts can be measured directly using the micrometer dials or compared with a profile or template drawn directly on the screen. The images on the screen can also be directly measured by a ruler and these dimensions then divided by the magnification being used -- usually 10 to 20X. The projector magnification should be checked, however, when this technique is used by projecting a known standard onto the screen.

28. Because of the large distance and the accuracy and precision needed, a laser interferometer would probably be most suitable.

29. The laser scanner is more precise and likely to be faster with less image processing.

30. The CMM is a mechanical device with precise X - Y - Z movements for precision 3D measurements. Usually a probe is used to touch the surfaces of parts being measured and the dimensions are read on digital displays and computer terminals.

31. The principle of the sine (definition of sine) is that the sine of an angle in a right triangle is the ratio of the length of the side of the triangle opposite the angle to the length of the triangle hypotenuse.

32. The not-go member is usually made shorter than the go member because it undergoes less wear.

33. In using a dial gage, one must be sure that the axis of the spindle is parallel with the dimension being measured. Dial indicators also suffer from friction in the gears, so multiple readings are highly recommended.

34. The gage is designed so that if it errors, it will reject a good part rather than accept a bad part. The gage has a tolerance added for manufacturing and a tolerance added for wear.

35. The go ring should slip over the shaft. If it does not, the shaft is too large. The not-go ring should not slip over the shaft. If it does, the shaft is too small.

36. Air gages will detect both linear size deviation and out-of-round conditions of holes. They are fast and there is virtually no wear on the gage or part.

37. Monochromatic light waves will interfere with each other (producing light and dark bands) if they get out of phase. Thus, a dark band indicates that the two beams have cancelled each other out. Light from a single source can be shifted out of phase by having it travel different distances.

38. An optical flat is made from glass or quartz, is transparent, and the two faces are flat and parallel to a high degree of accuracy. A toolmaker's flat is made of steel, with the two faces very flat, but they do not have to be exactly parallel .

39. The microinch roughness, either arithmetic average roughness or root mean square roughness, is a single number that describes an extended line. So, different profile patterns can have the same average height value just as different populations of measurements can have the same average value.

For example, consider the three surface profiles shown (wavy, dashed line, solid line) which each have the same maximum height of roughness = 1 unit, the same number of height measurements = 14 and the height measurements made at the maximum height points of the wavy profile and labeled 1-14.

The reference line for calculation of R_a is at the mid-height of the profiles = ½ and so the 14 height measurements are all = ½.

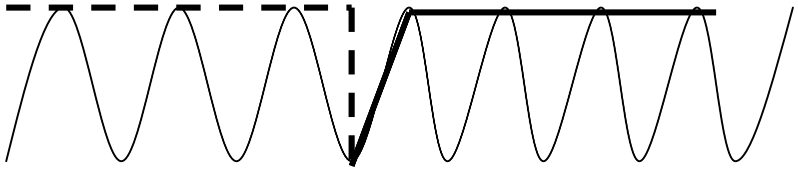

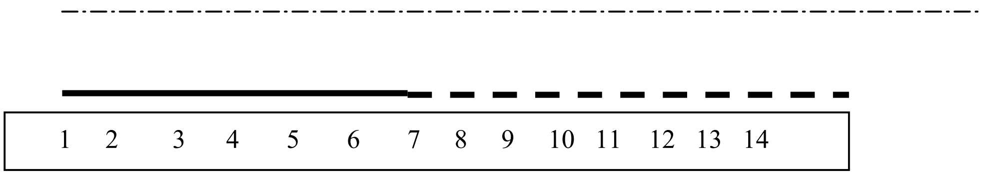

The R_a value for all the profiles is $R_a = (14)(1/2) / 14 = ½$

40. Because identical roughness values can be very different in appearance, surface-finish blocks enable a designer to better relate a desired surface, obtained by a specific process, to the measured value that must be specified.

41. The spherical radius of the tip of a diamond stylus limits the resolution. Suppose you have a smooth plate with small holes on it. In your hand you have a needle and are trying to locate the holes. Let's assume the holes are square, round, and triangular in shape. The needle will allow you to detect the location of the holes, but not identify their shape when the holes are about the same size as the tip of the needle or smaller. Thus, there is a big difference between being able to detect the presence of a flaw and being able to resolve its geometry .

42. As the surface finish improves (surface gets smoother and AA or rms values get smaller), the tolerance generally improves
--gets smaller. Improving the surface finish and tolerance usually means identifying better, more precise processes, so the cost goes up accordingly. The exception is finishing processes which are used to improve the surface finish without strong regard to the tolerance.

43. Devices that use light scattering correlated to surface roughness lose their validity when surface roughness gets much above 40 - 50 mm. AA.

Problems:

1. Reading 1.436 in.

Inches are numbered in sequence over the full range of the bar. Every fourth graduation between the inch lines is numbered and equals one-tenth of an inch or 0.100". Each bar graduation is one twenty-fifth of an inch or 0.025".

The vernier plate is graduated in 25 parts, each representing 0.001". Every fifth line is numbered - 5, 10, 15, 20, 25 - for easy counting.

To read the gage, first count how many inches, tenths (0.100") and twenty-fifths (0.025") lie between the zero line on the bar and the zero line on the vernier plate and add them.

Then count the number of graduations on the vernier plate from its zero line to the line that coincides with a line on the bar.

Multiply the number of vernier plate graduations you counted times 0.001" and add this figure to the number of inches, tenths and twenty-fifths you counted on the bar. This is your total reading. The vernier plate zero line is the one inch (1.000") plus four tenths (0.400") plus one twenty-fifth (0.025") beyond the zero line on the bar, or 1.425". The 11th graduation on the vernier plate coincides with a line on the bar (as indicated by stars). 11 x .001" (.011") is therefore added to the 1.425 bar reading, and the total reading is 1.436".

2. Reading 41.68 mm

Each bar graduation is 0.5 mm. Every twentieth graduation is numbered in sequence - 10 mm, 20 mm, 30 mm, 40 mm, etc. - over the full range of the bar. This provides for direct reading in millimeters .

The vernier plate is graduated in 25 parts, each representing
0.02 mm. Every fifth line is numbered in sequence -0.10 mm,
0.20 mm, 0.30 mm, 0.40 mm, 0.50 mm - providing for direct reading
in hundredths of a millimeter.

To read the gage, first count how many mm lie between the zero line on the bar and the zero line on the vernier plate.

Then find the graduation on the vernier plate that coincides with a line on the bar and note its value in hundredths of a mm.

Add the vernier plate reading in hundredths of a mm to the number of mm you counted on the bar. This is your total reading. The vernier plate zero line is 41.5 mm beyond the zero line on the bar, and the 0.18 mm graduation on the vernier plate coincides with a line on the bar (as indicated by stars.) 0.18 is therefore added to the 41.5 mm bar reading, and the total reading is 41.68 mm.

3.

41.68 mm = 1.6409 inches
1.6409 - 1.436 = 0.2049 inches

4. Same as in 8th edition

$\sin \theta = 3.250 / 5.000 = 0.65$
$\theta = 40.54$ degrees

5. The error due to the gage blocks will be covered up by the dial indicator error

+0.000,008 or -0.000,004 for gage blocks versus
+0.001 or -0.001 for dial indicator

The error will be 3.249 to 3.251 due to leveling of the part with the dial gage.
= 40.53 to 40.55
Error ~.02 degrees, due to dial indicator not the gage blocks.

6. A 0.359 B 0.242 C 0.376

7. A 0.2991 B 0.3001

8. Metric vernier micrometers are used like those graduated in hundredths of a millimeter (0.01 mm), except that an additional reading in two-hundredths of a millimeter (0.002 mm) is obtained from a vernier scale on the sleeve.

The vernier consists of five divisions each of which equals one fifth of a thimble division - 1/5 of 0.01 mm or 0.002 mm.

To read the micrometer, obtain a reading to 0.01 mm. Then see which line on the vernier coincides with a line on the thimble. If it is the line marked 2, add 0.002 mm; if it is the line marked 4, add 0.004 mm, etc.

The left side micrometer reads 5.500 mm

The 5 mm sleeve graduation is visible 5.000 mm

The 0.5mm line on the sleeve is visible.	0.500 mm
Line 0 on the thimble coincides with the reading line on the sleeve	0.000 mm
The 0 line on the vernier coincide with lines on the thimble.........	<u>0.000 mm</u>
The micrometer reading is	5.500 mm

The right side micrometer reads 5.508 mm

The 5 mm sleeve graduation is visible 5.000 mm The 0.5mm lines on the sleeve is visible. . . . . 0.500 mm
Line 0 on the thimble lies below the reading line on the sleeve, indicating that a vernier reading must be added.

Line 8 on the vernier coincides with a line on the thimble............ <u>0.008 mm</u>.
The micrometer reading is.......... 5.508 mm

9. Height difference = 5 x 0.000,001,6 x 2 = 0.000,116 inches.

10. The probe is used to find the stack of gage blocks that exactly matches the height of the ball sitting on the part.

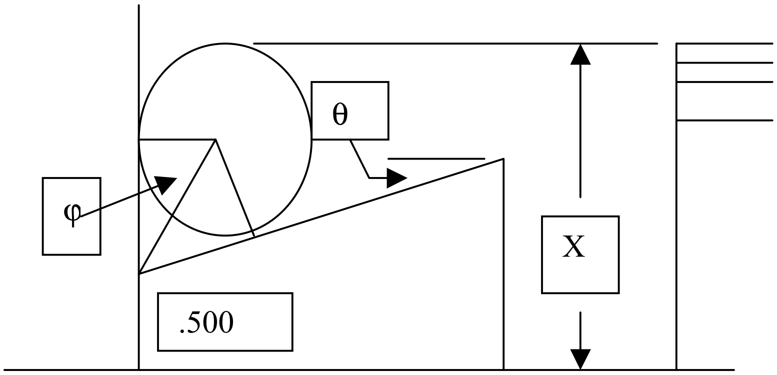

The angle θ is 17.354 degrees, from

$\tan \theta = (1.125 - 0.800) / 2.000 = 0.3125$

$X =$ height of gage blocks $= 0.500 + d + r$

$X = 0.500 + .5 \cot \varphi + 0.500$

$\cot \varphi = X - 0.500 - 0.500 / 0.500$

$90^{o} = 2 \varphi + \theta$

$\varphi = (90^{o} - \theta) / 2 = 36.3^{o}$

$X = 1.68$

11. The lower vernier reading is the inch scale and
0 on vernier is less than 1 on beam and past the 4 on beam => .4 inch
0 on vernier is 3 divisions past 4 on beam => (3/4)(.100 in) = 0.075 inch
vernier and beam graduations are given as lining up at 14 on vernier =>0.014 inch
Reading = .400 + .075 + .014 = 0.489 inch

For the top, metric, scale
0 on vernier indicates 12 mm
vernier and beam graduations are said to line up at 0.38 mm (0.41-0.42 may look better) => 0.38 mm
Reading = 12 + .38 = 12.38 mm

Case Study:

Machining Accuracy Over the Last Century

1. There are fundamentally different machining processes. For example large chip producing machining processes such as milling, grinding and lapping are all considered machining processes.

To estimate a limit in machining precision there are at least two approaches that can be followed. One is to extrapolate the data shown in the chart. Extrapolation is always dangerous and the issue is how far to extrapolate data.

Considering the "Precision machining" line on the chart the 1990 precision is about 0.3 μm = 12 μin. If this line is extended for 20 years a precision of about 0.07 is forecast. With the long extrapolation this value may be a reasonable limit.

2. Nanoprocessing is working with material either to produce nanometer scale features or working with material bodies that are nanometer size. Current computer hard disk substrates (before the magnetic and protective layers are applied) have surface roughness at the few nanometer level.

3. Industrial precision depends on the industry. Computer chip and disk drive industries routinely work at nanometer and less precision.

4. Without knowing the measurements made, a reasonable guess is that the vertical axis should be label "precision."

5. Most of the processing of materials at the nanometer level is concerned with producing nanometer level individual particles. These are formed in processes ranging from chemical synthesis to combustion.

CHAPTER 11
Nondestructive Inspection and Testing

Review Questions

1. Destructive testing has to be done on a statistical basis for two general reasons.
i. Since testing involves making the part tested not useful, not all parts can be tested. (In reality, unless absolutely necessary testing of all parts is undesirable even if the testing is not destructive.) So, in order to obtain information about the entire population of parts from a subset of tested, and no longer useful, parts statistical techniques are needed.
ii. Often the behavior of interest in part testing is due to characteristics specific to a particular part, e.g., a flaw that exceeds a certain size and so serves as a fatigue failure initiation site. In such cases and even with nondestructive testing a number of tests are again required to obtain information about a large number of parts from a tested sample of parts.

2. In a proof test, a product is subjected to loads of a determined magnitude, generally equal to or greater than the designed capacity. If the part remains intact, then there is reason to believe that it will perform adequately in the absence of abuse or loads in excess of its rated level.

3. Hardness tests can be used to provide reasonable assurance that the proper material and heat treatment were employed in a given part. The tests can be performed quickly, possibly on every product, and the associated mark can easily be concealed or removed .

4. Nondestructive testing is the examination of a product in a manner that will not render it useless for future service. The testing can be performed directly on production items or even parts in service. The entire production lot can be inspected, different tests can be applied to the same item, and the same test can be repeated on the same specimen if desired. Little or no specimen preparation is required and the equipment is often portable.

5. Some possible objectives of nondestructive testing include: the detection of internal or surface flaws, the measurement of dimensions, the determination of a material's structure or chemistry, or the evaluation of a material's mechanical or physical properties.

6. When selecting a nondestructive testing method, one should consider the advantages and limitations of the various techniques. Some can be performed on only certain types of materials. Each is limited in the type, size, and orientation of the flaws that it can detect. Various degrees of accessibility may be required and there may be geometric restrictions as to part size or complexity. Availability of equipment, the cost of operation, the need for a skilled operator, and the availability of a permanent record are other considerations.

7. By ensuring product reliability and customer satisfaction, nondestructive testing can actually be an asset, expanding sales and profitability. In addition, it can be used to assist product development and process control, further reducing costs.

8. Visual inspection should be a primary means of inspection because,
- it is very discerning, especially with training and experience,
- the brain is a powerful tool for interpreting images,
- aids for optical inspection are readily available, e.g., magnifying instruments and cameras,
- quantitative image analysis techniques and tools are available,
- surfaces are often important regions in determining quality and performance of manufactured parts.

9. Visual inspections are limited to the accessible surfaces of a product, so no information is provided relating to the interior structure or soundness.

10. Liquid penetrant testing can be used to detect any type of open surface defect in metals and other nonporous materials. Cracks, laps, seams, lack of bonding, pinholes, gouges, and tool marks can all be detected.

11. Materials must be ferromagnetic in order to be examined by the magnetic particle technique. Nonferrous metals, ceramics and polymers cannot be inspected .

12. The relative orientation of a flaw and magnetic field is quite important in determining whether the flaw will be detected, since the flaw must produce a significant disturbance to the magnetic field. If a steel bar is placed inside an energized coil, a magnetic field is produced that aligns with the axis of the bar. Defects perpendicular to this axis can be easily revealed, but a flaw parallel to the axis could go relatively unnoticed. By passing a current through the bar, a circumferential magnetic field is produced that will detect axial flaws, but not those in a radial orientation.

13. Testing where one listens for the characteristic "ring" to a product, is limited to the detection of large defects because the wavelength of audible sound is rather large compared to the size of most defects.

14. The coupling medium in ultrasonic inspection is used to improve the transmission of energy, ultrasonic vibrations, into and out of the test piece. The coupling medium couples the transducer and test piece and test piece and received with respect to the incident and transmitted or reflected ultrasonic signals.

15. Three types of ultrasonic inspections are: (1) pulse-echo, where inspection is made from one side or surface; (2) through-transmission, where the sending and receiving transducers are on opposite sides of the piece, and (3) resonance testing, where thickness can be determined from a single side.

16. X-rays, gamma rays and neutron beams can all be used to provide radiographic

inspection of manufactured products .

17. A penetrameter is a standard test piece that provided a reference for the image densities on a radiograph. Penetrameters are made of the same or similar material as the specimen and contain structural features of known dimensions. The image of the penetrameter then permits direct comparison with the features in the image of the product.

18. The limitations of radiographic inspection techniques have to do with incident radiation being scattered by part characteristics other than those of interest and with high cost.

With regard to part characteristics, incident radiation is scattered in all directions due to the material itself and so contrast between characteristics of interest and the overall material background is lost. This may require image enhancement to make the images useful.

19. Since the materials examined by eddy-current inspection must be good electrical conductors, it is unlikely that the technique would be useful to examine ceramic or polymeric materials.

20. Eddy current testing uses the change in magnetic permeability and electrical conductivity as the basis for producing a measurable output and so any part characteristic that depends on these quantities can be identified. Eddy current testing can be used to detect surface and near surface flaws, differences in metal chemical composition and heat treatment , hardness, case hardness depth and residual stress. Other testing techniques can be used to measure these characteristics individually, eddy current testing can be used to measure all of them.

21. Acoustic emission is not a means of detecting an existing, but static defect in a product, but a means of detecting a dynamic change, such as the formation or growth of a crack or defect or the onset of plastic deformation. The sound waves emitted during this dynamic event are detected and interpreted.

22. By using multiple sensors and timing techniques similar to those used to locate earthquakes, acoustic emission can be used to physically locate the flaw or defect emitting the sound.

23. Various thermal methods can be used to reveal the presence of defects. Parts can be heated and means used to detect abnormal temperature distributions, indicative of faults or flaws. The presence of "hot spots" on an operating component can be an indication of defects. Thermal anomalies can also provide an indication of poor bonding in composite materials.

24. Evaluations of resistivity from one sample to another can be used for alloy identification, flaw detection, or the assurance of proper processing - such as heat

treatment, the amount of cold work, weld integrity, or the depth of case hardening .

25. Computed tomography provided a cross-sectional view of the object along the axis of inspection. By multiple scanning, full 3-dimensional representations of the interior of a product can be generated .

26. Since surface regions of materials often serve as initiation sites for failure, e.g., the high stress, irregular surface profile regions of machined shafts, surface region characterization is important. Chemical composition of surface layers can be important in determining part performance since it affects part structure and properties.

Some surface region chemical composition characterization techniques are Auger electron spectroscopy (AES), energy-dispersive X-ray analysis (EDX), electron spectroscopy for chemical analysis (ESCA), and secondary-ion mass spectroscoopy (SIMS).

27. The basis of inspection was once the rejection of any product shown to contain a flaw or defect. With the rapid advances in inspection capability, it is now possible to detect "defects" in almost every product, including those that perform adequately. The basis of discrimination should be the separation of products with critical flaws that could lead to failure, from products where the flaws will remain dormant throughout the lifetime of the product, i.e. allowable flaws.

Problems:

1. X-ray radiography is a poor means of detecting cracks in a product, for the crack or void size must be sufficiently large as to produce a difference in transmitted intensity. Only if the orientation of a crack were parallel to the X-ray beam would there likely be sufficient differences to detect the flaw. Otherwise, the X-ray would indicate a given and constant thickness of material and reveal none of the existing cracks.

Crack detection would be better performed by ultrasonic inspection, penetrant testing, and magnetic particle inspection. These have limitations as to the location, depth and orientation, but are generally superior for detecting cracks than X-ray radiography .

For a permanent record, the electronic signals received at the transducers in ultrasonic inspection, and displayed on some form of screen, can also be recorded on magnetic tape or some other form of storage medium. The surfaces of parts examined by penetrant inspection or magnetic particle techniques can be photographed or recorded on some form of video recorder.

2. A major limitation to each of the following is:

- Visual inspection: Depends upon the skill of an inspector and is limited to surface flaws.

- Liquid penetrant inspection: Can only detect flaws that are open to the surface.
- Magnetic particle inspection: Orientation of the flaw and field affects sensitivity, limited to ferromagnetic materials, detects only surface and near-surface flaws.
- Ultrasonic inspection: Difficult to use with complex shape parts, trained technicians are required, and the area of inspection is small.
- Radiography: Costly, must observe radiation precautions, defects must be larger than a minimum size, must generally process film to get results.
- Eddy current testing: Reference standards are needed for comparison and trained operators are required, materials must be conductive, depth is limited.
- Acoustic emission monitoring: Only growing flaws can be detected, experience is required, and there is no indication of the size or shape of the defect.

3. Consideration of various inspection techniques means will they work, in contract to selecting the best measurement scheme.

Techniques for detection of surface flaw and internal flaws can be separated based on the penetration of the probe into the material. This will depend on the king of probe used and the transparency of the material to it.

a. The most obvious properties of ceramics that will affect choice of measurement technique are low electrical conductivity and absence of ferromagnetism. Some ceramics are transparent to light but overall most structural ceramics are not optically transparent.

b. Polymers are also poor electrical conductors, nonmagnetic and have low density. Different polymers are transparent and opaque.

c. Fiber composite regions that might be of interest are the fibers, the matrix and the fiber-matrix interface. The usefulness of the means of inspection will depend on the region of interest.

The general purpose nondestructive inspection methods (e.g., not leak testing) described in the chapter can be screened using the general Go – No Go concept used in Chapter 9 for materials screening.

Surface Flaws				
	Ceramics	Polymers	Composites polymer matrix	Composites metal matrix
Visual	yes	yes	yes	yes
Liquid Penetrant	yes	yes	yes	yes
Magnetic Particle	no	no	no	probably

Ultrasonic*	yes	yes	yes	yes
Radiography	no	no	no	no
Eddy Current	no	no	no	yes
Acoustic Emission	no – AE are produced by deformation processes and while ongoing deformation depends on existing flaw state to some extent, use of AE seems not feasible			
Thermal Methods	yes – but relatively low high heat capacity and low thermal conductivity of polymers makes thermal methods less useful			
Strain Sensing	yes	yes	yes	yes
Electrical Resistivity	no	no for typical polymers, with conductive polymers a very special case		yes
Surface Topography	yes	yes	yes	yes

* using surface waves,

Subsurface Flaws				
	Ceramics	Polymers	Composites polymer matrix	Composites metal matrix
Visual	no except for transparent materials			
Liquid Penetrant	yes for near surface flaws			
Magnetic Particle	near surface	no	no	near surface
Ultrasonic*	yes			
Radiography	yes, effectiveness depends on material density			
Eddy Current	no	no	no	near surface
Acoustic Emission	no – AE are produced by deformation processes and while ongoing deformation depends on existing flaw state to some extent, use of AE seems not feasible			
Thermal Methods	near surface			
Strain Sensing	no unless accurate mechanical models available for relating measured surface strains to internal stress fields that depend on flaws			
Electrical Resistivity	no	no	no	near surface
Surface Topography	no			

* through transmitted mode

4. High density powder metallurgy parts can be treated as conventional parts from the viewpoint of both inspection and secondary processing. As the density decreases (i.e. the volume fraction of voids increases), the material is less capable of transmitting sound, current, and magnetic field -- the essence of the various probing techniques. Moreover, the voids are actually "defects" and are often detected. when the numbers become great,

the signals become quite garbled, and the presence of additional, more-significant, defects may be difficult, or impossible.

5.Quality control is covered in Chapter 12, Total Quality Control in Section 12.4. The question posed in the problem can be addresses in general terms without recourse to the details provided in Chapter 12.

The facile answer is - just as 100% inspection has an error rate so too do the processes used in total quality control and so it is not clear which is superior. The more complete answer is that if the combination of processes in total quality control systems reduces the defect rate to a lower level than in 100% inspection a superior system exists. In essence, the whole (total quality control) performing better than the sum of its parts, or perhaps better than any particular part (inspection).

A more detailed, quantitative answer can be developed using the concepts presented in Chapter 12 and actual inspection and quality control system data.

6. When both sides of the part are accessible easy-to-use, accurate, inexpensive mechanical measuring instruments can be used – rules, rules and calipers, vernier and micrometer calipers and even dial indicators, depth gages and height gages can be used. Large enough flat surface areas have to be accessible.

Optical instruments such as microscopes, optical comparators and vision systems can be used if edge-on views are practical.

Even though designed for more complicated measuring tasks, coordinate measuring machines can be used to measure part thickness if the two sides are accessible.

In general, when both sides of the part are accessible to mechanical or optical instruments and the part shape is compatible with the size of the probe (the micrometer anvil size for example) many, simple measurement techniques are available.

When only one side of the part is accessible suitable thickness measurement instruments are more limited. The pulse-echo technique described in the problem is a possibility as is the resonance testing method described on page 238.

The theoretical “ability to measure from only one side” is usually not the actual case. The part will probably be resting on a surface and so thickness measurements using various physical phenomena can be envisioned, although they may be impractical due to cost, safety or other concerns. Electrical resistance between the support surface and a electrode on the accessible part surface can be used to measure thickness. A heat source applied to the part surface and temperature measurements at the part surface and support surface along with thermal conductivity data could be used to measure thickness. Similarly, measuring the heat flux needed to maintain a constant temperature difference could be used to deduce thickness.

7. The expression given in Problem 7 can be used

$$t = 2d / V$$

$$d = 2\,(\,0.003\text{ m}\,) / 5000\text{ m/s} = 1.2\ \mu\text{s}$$

8. Wavelength $= \lambda = V / f$

For parts a. Ultrasonic waves, and c. Acoustic emissions, the relevant velocity of propagation is the speed of sound in the material.

For part b. X-rays, the frequency and speed of the X-ray through the material are needed.

The propagation speed of electromagnetic radiation through free space is 3E8 m/s. Typical X-ray frequencies are $10^{17} - 10^{20}$ Hz as given in most references, e.g., an encyclopedia.

Using $f = 10^{17}$ Hz gives $\lambda =$ 3E8 m/s / 1E17 /s = 3E-9 m = 3 nm as a first approximation for X-rays traveling through a material or electromagnetic field that does not appreciably change the propagation speed, i.e., materials that are transparent to X-rays..

The speed of sound in steel is about 5000 m/s and using this value since it is given in Problem 7 and ZZZ for the speed of X-rays through steel

a. $\lambda =$ 5000 m/s / 500000 /s = 0.01 m

b. $\lambda =$ 3 nm

c. $\lambda =$ 5000 m/s / 10^6 /s = 0.005 m

Case Study:

Portable Failure Analysis Kit

1). The primary purpose of the requested kit is to collect information and specimens for examination back at the laboratory. It would be inappropriate for the investigator to try to perform laboratory-type examination in the field, especially if these could be better or more accurately performed in the lab. NOTE:
On rare occasions, the mere size of the piece in question (such as a bridge) or the desire for immediate results renders such testing desirable, but such is not usually the case. Therefore, a proposed kit would contain:

a) .Equipment for gathering information, such as the observations and opinions of operating personnel, supervisors, observers, etc. This would include: a notebook, pens and pencils, and a small portable tape recorder (with tapes) .

b). Photographic equipment to record the failure site, the locational relationship of failed components, the stages and sequence of disassembly, and/or the location and orientation of samples removed from the failure or the failure site. A Polaroid camera with color film would assure the access of acceptable photos. A close-up lens and flash attachment would be desirable, as would an ample supply of film (a type that provides a negative would be preferred) and spare batteries for the camera. A ruler or other well known object can be included in photos to reveal the relative size of components.

c) . A variety of hand-operated tools to assist in the removal of components and the collection of laboratory specimens. This might include: A hacksaw and blades, hammer, pliers, screwdrivers, knife, wrenches (socket and straight), clamps, chisels, scissors, tweezers .

d). Examination aids, such as: a flashlight with spare batteries, magnifying glass or jeweler's eyepiece (lOX), low-power binocular microscope, small handheld and dental mirror.

e) . Measuring devices, such as a ruler, measuring tape, micrometer, and vernier.

f) . Marking devices to label specimens and denote in photos the locations of cuts or the orientation of the pieces: magic markers, chalk, grease pencils, and pens.

g). Equipment to perform several basic tests:

- A portable dye penetrant testing kit to reveal the presence of cracks.
- A set of triangular metal files can be tempered in the laboratory to various hardnesses to provide an inexpensive means of getting "ballpark" hardness in the field.

h) . A portable drill with attachments can be used to obtain borings, wire brush surfaces, grind surfaces, produce a crude spark test, etc.

i). Equipment for identifying, preserving, and transporting specimens back to the laboratory: envelopes, labels, plastic bottles, zip-lock bags, cellophane tape and masking tape (can be used to remove and preserve corrosion products for X-ray analysis, as well as more normal uses) .

j). Cleaning agents, chemical reagents (solvents, etchants, macroetches, etc.), abrasives (sand paper, toothpaste, etc.), cloths and rags, toothbrush, other small brushes.

k) . Wax or clear nail-polish to coat and preserve critical fracture surfaces .

1). A small magnet - to check materials and discern various types of stainless steels.

m). Gloves and safety glasses.

n) .Environmental evaluation devices: thermometer, hygrometer (humidity), litmus paper (possibly graded by pH).

0).A small vise.

p). A small propane torch - to heat or loosen components. (NOTE: be sure exposure to heat will not alter or obliterate evidence.)

q) .A cold-mount kit to permanently mount small or fragile specimens .

r) Selected reference manuals on engineering materials and their properties

2). With additional funds, one might want to consider:

a). An additional camera, such as a high-quality 35-mm with a variety of special lenses (telephoto, close-up, wide angle), and upgrade facilities for the previous Polaroid camera, which would be retained to assure the acquisition of acceptable photos.

b) A calibrated portable hardness tester, such as a portable Brinell tester.

c) An improved microscope with special eyepieces to measure case depth, thickness of plating layers, etc.

d). Portable metal identification kit (to identify specific metals and alloys).

CHAPTER 12
Process Capability and Quality Control

Review Questions

1. A PC study examines the output from a process in order to determine the capability of the process in terms of its accuracy (its aiming ability or its ability to hit the desired nominal value) and its precision (the ability of the process to repeat the variability in the process). Accuracy refers to the centering of the process and variability refers to the scattering of the values about the center value. Accuracy is measured by the mean of the values and variability is measured by the standard deviation of the values about the mean -- also called the spread of the distribution.

2. Every process has some inherent variability. The causes of this variability may be known (assignable) but not removable (you know what is causing the variation but it is not feasible or too costly to remove it) or unassignable (i.e., inherent in the process and thus not removable). The latter is its nature.

3. It would look like Figure 12-la with occasional holes scattered to the right of center at various distances from the center -- a random pattern because the wind is gusting, not steady. In real processes, intermittent changes of this sort are extremely difficult to isolate and identify and therefore remove from the process as an assignable cause. This is an example of an assignable cause that would be difficult to remove -- how do you make the wind stop gusting without great cost (i.e. enclose the shooting range) .

4. A good way to get students to review the steps in a P.C. study is to have them try to do one themselves. The example of shooting a gun given in the text can be "simulated" by having the students work with file cards for targets and darts for the bullets. Give each student in your class a different distance to stand from the cards (mounted on a dart board) when the class data is examined as a whole, you will observe the increase in process variability with distance from the target. Depending on the dart throwing ability of the students, there will also be a loss of accuracy.

5. Two "identical" machine tools doing exactly the same process will have different amounts of process variability. The individual machines will have different variability when the work material is changed, the operator is changed, the specific process on the machine is changed, etc. Thus, it is necessary to gather data on the specific machine tool during the process itself .

6. Taguchi experiments can be used to determine the process capability of a process. Taguchi methods used truncated (simplified) experimental designs in which all the causes of variability are explored. They permit the variability to be reduced by selecting the proper combination of input variables to reduce the noise (i.e., the variability) in the output.

7. In typical experimental approach, one variable at a time is examined and all other variables are kept constant. In the Taguchi or experimental design approach, all significant variables are mixed and varied in the same experiment. The latter approach permits one to find the important interactions between dependent variables as well as to evaluate the significance of each variable.

8. The Taguchi approach results in much better understanding and control of the process, particularly the interactions between variables. More importantly, the results point the direction to run complex processes with the minimum variability and explain why some processes go out of control when some parameter is reset.

9. Without doing the actual experiment, one can only guess as to which variables dominate a process. For baking a cake, the oven temperature and the ingredients (like type of flour) would be dominant along with the pressure (altitude) . The cook may be important here also.

For mowing the lawn, the blade sharpness, blade height versus grass height, blade speed, and blade geometry would probably all be important.

For washing dishes, the water pressure, the water temperature, the right kind of soap, and perhaps the dish spacing would be most important. Here the operator would not be as important as the design of the machine. The water softness may also be important. The loading of the machine is setup.

10. Let us assume that you want to drill a 1 cm hole. The drill selected is usually 1 cm in diameter. Undersized holes are not possible until the drill body has worn down, so most of the holes will be oversize. Reground drills often have unequal lip length or rake angles causing the drill forces to be unbalanced, resulting in oversized holes. Assuming you are drilling many holes with many drills, the majority will be oversized, developing a skewed distribution of hole sizes. Do not confuse hole size with hole location. The chisel end of the drill causes problems in obtaining repeated location -- drill "walks" on the surface. Hole location distributions are not necessarily skewed.

11. Examples of items that may receive

a. 100% inspection:
At a general level all automobile engines are tested as the vehicle is driven away from the assembly plant. Critical parts in high value added products used in high potential loss situations are all tested, e.g., large turbine blades in jet aircraft engines.

b. No final inspection:
There are very few manufactured items that do not receive some sort of final inspection. Processes that run very reliably and consistently over long time are candidates for little inspection of the final products. The N = 2 inspection scheme entails inspection of the first and last items and if they pass inspection all items in-between are assumed to be good.

Some items are not inspected immediately after manufacture but the end user is assumed to be the final inspector. If the item does not work for the purchaser it can be returned, e.g., light bulbs.
Examples of no-inspection products are mature products produced in large batches by experienced manufacturers, e.g., nails where often mis-manufactured nails are found in boxes of nails. Manufacturing machines and tools are maintained to produce good parts but individual parts are probably tested only on startup of the operation.

c. Sampling final inspection:
This kind of sampling is usual for almost all but the simplest manufactured parts. Examples are automobile crankshafts and gasoline.

12. If the test is destructive (bullets or flash bulbs), if the test is expensive compared to the cost of the item (newspapers), if the item is made in great volumes by reliable or continuous processes (sheets of paper), if the test takes a long time (lifetime test for electronics), then the output is often sampled. Sampling is thus a more economical means to check the quality, but there is always the trade off that, when you sample, you will make errors in judgement about the whole. See questions

13. When prediction (sample suggestion) is the same as reality there is no error. Type I error, alpha error is when prediction is that change occurred when in reality there was no change. Type II, beta error when prediction is that there was no change when in actuality the process did change.

		In reality, the process	
		Changed	Not changed
Sample suggested that the process	Changed	No error Process bad	Type I error
	Not changed	Type II	No error Process good

14.You always have some probability of error when you sample (look at a selected few) and then make a decision about all. Both types of errors can be detrimental, even devastating. Sampling inspection systems which miss defects that result in automotive recalls are very expensive and hurt the product's reputation with consumers. Suppose you have a herd of cows. The vet finds a sick cow (sample of one) and condemns all the rest (which are not sick). or he looks at one cow, finds it well, but the rest have hoof and mouth disease but are not condemned. Either situation is very bad.

15. It is usually the beta error which leads to legal action since the beta error results in a defective product which was thought ~o be good, according to the sample. Many sampling systems are designed to protect those who do the inspection against making type I or alpha errors (saying something is bad when it is good) because alpha errors are embarrassing --stopping the line only to find nothing is wrong. The same is true in general for beta errors -- the system gets blamed for missing the problem, but since the

engineer took no action, no blame is directly assigned. However, beta errors can be many times more costly in the long run than alpha errors.

16. Assume that some characteristic of many items is being measured and the distribution of the population of measurements is a normal distribution.

The distribution of all the measurements, i.e., measurements of the parent population, has a standard deviation σ'.
For a number, *k*, of samples of size *n* taken from the parent population, some statistics of the individual samples are
- the mean of each sample, $\overline{X}$
- the range of each sample, R
- the average of the *k* sample standard deviations, $\overline{\sigma}$

A distribution of the sample statistics can be formed and some statistics of sample distributions are
- the standard deviation of the distribution of sample averages, $\sigma_{\overline{X}}$
- the standard deviation of the distribution of sample ranges, σ_R
- the standard deviation of the distribution of sample standard deviations, σ_σ

So,
a. σ' is the standard deviation of the population while $\sigma_{\overline{X}}$ is the standard deviation of the distribution of sample average values
b. σ' is the standard deviation of the population while $\overline{\sigma}$ is the average standard deviation for the *k* samples of size *n* taken from the population
c. $\sigma_{\overline{X}}$, σ_R and σ_σ are the standard deviations of three distribution;
- the standard deviation of the distribution of the *k* sample averages,
- the standard deviation of the distribution of the *k* sample ranges,
- and the standard deviation of the distribution of the *k* sample standard deviations, respectively.

16. You have a process which is producing many items and you are measuring some characteristic on each item. All the measurements of all the items create a parent population of measurements of individual items. Assuming the distribution of all the items is normal, it has some standard deviation, called ~. when you take samples from the parent population of size n, you can create distributions of sample statistics. The means of each sample are called ~ and the range of each sample is called R. Thus ~ and ~R are the standard deviations of the distributions of the sample means and sample ranges, respectively. These distributions tend to be normal, regardless of the shape of the parent population (Shewhart's Law of Sample Statistics) .

17. This is the process capability index. A value of 0.8 would mean that the process spread (i.e. the variability as measured by the standard deviation) exceeds the tolerance spread (USL - LSL) . A value of 1.0 means that these two measures are equal. A value of

1.33 means that the tolerance spread exceeds the natural spread of the process so that all parts being made are within the specification, provided the process is centered.

18. The bias factor determines how far the mean of the process lies from the intended mean or the minimal. (How good is the aim of the process?)

19. When the natural variability of the process (6 sigma prime) exceeds the specified total tolerance, you will have a condition which assures that out-of-tolerance products will be made (defectives, scrap, rework, etc.). Has the proper choice of process been made? Can the tolerances be relaxed? Can the process be improved to decrease its variability? (Are there assignable causes of variation which can be eliminated/) Is this a situation where we will have to live with a certain percentage of defective products? Can we automatically sort out the defects? Will a combination of the above kinds of solutions solve the problem?

20. This factor includes a measure of the process's ability to center itself or to be centered or well-aimed.

21. Yes, because sample statistics will be normally distributed about their mean.

22. When a reason for the cause of the variability can be found, one has an assignable cause. A chance cause is inherent to the process and cannot usually be removed, though its effect can be minimized.

23. It is easier to compute (by hand) and easier to understand, but gives less information about the sample.

24. The SD of the distribution of sample means, $\sigma_{\overline{X}}$, is equal to the SD of the parent distribution, σ', divided by the square root of n, the sample size.

$$\sigma_{\overline{X}} = \sigma' / \sqrt{n}$$

25. Customer demands drive much of product development and so customer demands for high quality automobiles is a cause for marked quality improvement.

At the technical or manufacturing level the improvement in automobile quality is in large part due to improved process control, both
- the control of individual or unit processes such as increased accuracy and improved repeatability machine tools,
- at the system control level based on statistical quality control techniques and Taguchi methods resulting in improved parts and products.

Problems:

1. For demonstration of the question, golf balls have been selected. The characteristic to be measured is the diameter. A golf ball is made from hard rubber with a liquid core. It has a dimpled surface to improve flight accuracy and distance. Its diameter is specified as 1.68 inches minimum by the Professional Golf Association. Measurements were made with a 1 to 2 inch micrometer .

Golf balls are made by a process with a natural total tolerance of 6~' approximately equal to 0.01 inches with an average size of 1.68 inch.

The data given for the golf balls (See chart provided) was for good used golf balls found on the golf course near one of the author's home. They were separated by Titleist (TI), Pro Staff (PS), Top Flight (TF), Pinnacle (P1), and Dunlop (DU). Judging from the sample, the Top Flight ball is either the most popular or is played by the poorest golfers, as about half of the balls found were Top Flights. Obviously, this is a mixed sample and all of the balls were not made by the same machine. However, all manufacturers use the same basic process.

You can add to the complexity of the process capability study by using coins and having the student separate the coins by year. Assuming all the coins have been in circulation, if one measures weight or thickness at a given point, one should find a wear factor related to the age of the coin. Thus, the mean should show a trend -- coins get thinner and lighter with use. But what about the standard deviation?

2. This question uses basically the same mathematics as the last. M&Ms come in different colors as candy-coated chocolate. The student must decide what to do with samples from a bag having mixed colors. Ignoring the different colors means that he (or she) assumes that there is no difference in the process, when in fact there must be different processes being used to make the different colors (or different production lines) . It is a bit tricky to measure the thickness or diameter of M&Ms and easier to measure their weight if the student has access to a scale of sufficient precision. The difference between this experiment and the former one is that in the former one, there were only 48 items. Here, there are many items and they are being sampled. Doing the experiment for weight allows the student to see how the sample estimate of X' can be used to obtain the estimate of the true value, which was obtained by weighing all and dividing by the total number. Questions like "Does thickness have a greater variability than diameter?" can be addressed by letting some students measure thickness and some diameter and comparing their results .

Sample No.	Measurements of Diameter	Xbar	R
1 T1	1.683 1.675 1.682 1.680	1.6800	0.007

2 PS	1.681 1.678 1.681 1.682	1.6805	0.003
3 TF	1.676 1.682 1.682 1.679	1.6798	0.006
4 TF	1.677 1.680 1.680 1.679	1.679	0.003
5 TF	1.677 1.679 1.679 1.678	1.677	0.004
6 PI	1.679 1.681 1.682 1.678	1.6800	0.004
7 TI	1.678 1.675 1.678 1.677	1.6770	0.003
8 TF	1.681 1.680 1.680 1.681	1.6803	0.001
9 DU	1.676 1.679 1.680 1.680	1.6800	0.004
10 PS	1.677 1.680 1.677 1.677	1.6775	0.003
11 TF	1.678 1.677 1.679 1.677	1.6778	0.002
12 TF	1.675 1.677 1.678 1.676	1.6767	0.004

$\sum \overline{X} =$20.1456

$\sum R =$ 0.044

$\overline{\overline{X}} =$ 1.6788

$\overline{R} = \sum R / 12 =$ 0.044 / 12 = 0.00366

Estimate of $\overline{X} = \overline{\overline{X}} =$ 1.6788

Estimate of $\sigma' = \overline{R} / d_2 =$ 0.00366 / 2.059 = 0.0017775

3. Process Capability

(12-1) $C_p = \dfrac{Tolerance\,spread}{6\sigma'}$

for σ' = 0.0021

C_p = { (1.006 – 0.996) } / { 6 (.0021) } = 0.79

(12-2) $$D = \frac{Estimated\ process\,mean - No\min al}{\frac{1}{2}(Tolerance\,spread)}$$

$D = \dfrac{\overline{X}' - No\min al}{\frac{1}{2}(USL - LSL)}$ = 0.00085 / 0.005 = 0.17

(12-4) $$C_{pk} = \frac{Min\left\{\left|USL - \overline{X}'\right|, \left|LSL - \overline{X}'\right|\right\}}{3\sigma'}$$

$\left|USL - \overline{X}'\right|$ = 1.006 – 1.002 = 0.18

$\left|LSL - \overline{X}'\right|$ = 1.002 – 0.996 = 0.22

C_{pk} = 0.004 / 0.0063 = 0.63

4. Process Capability

(12-1) $$C_p = \frac{Tolerance\,spread}{6\sigma'}$$ = { (0.502 – 0.498) } / { 6 (0.00067) }

= 0.99

(12-2) $$D = \frac{Estimated\ process\,mean - No\min al}{\frac{1}{2}(Tolerance\,spread)}$$

$$D = \frac{\overline{X}' - No\min al}{\frac{1}{2}(USL - LSL)}$$ = (0.500246 – 0..500000) / 0.002 = 0.123

(12-4) $$C_{pk} = \frac{Min\left\{\left|USL - \overline{X}'\right|, \left|LSL - \overline{X}'\right|\right\}}{3\sigma'}$$

$\left|USL - \overline{X}'\right|$ = 0.502 – 0.500246 = 0.001754

$\left|LSL - \overline{X}'\right|$ = 0.500246 – 0.498 = 0.002246

C_{pk} = 0.001754 / { 3 (0.00067) } = 0.87

5. The number of measurements per sample is 4 compared to 5 in the 8th edition
The formulas used in the solution are presented in Figure 12-13.
The solution is created in Microsoft Excel 97 and data values can be changed.

It is incorrect to determine the process standard deviation for setting control limits using all the data. The standard deviation from all the data will be affected by the variation between the sample means. The standard deviation for setting control limits must be computed from within-sample variations so excluding between-sample variations.

Further, if the R chart shows that the process is not in control the Xbar chart should not be used – until process control, indicated using the R chart, has been attained.

The net result is that the R chart should be formulated first, but the problem asks for Xbar chart and R chart in that order and this is how the following is presented.

The results using the data in the text give a run of data near the end of the Xbar Chart indicating non-random variation.

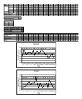

6. For the Parent Population, as discussed in Section 12.3

the parent population mean is estimated by $\overline{X}'$ and so is 0.72 calculated above in Problem 5

the parent population standard deviation is $\sigma' = \overline{R}\big/d_2$ and for n = 4,

d_2 = 2.06 (Figure 12-13) and

σ' = 0.078

Process Capability

(12-1) $$C_p = \frac{Tolerance\,spread}{6\sigma'}$$ = { (0.9 – 0.5) } / { 6 (.078) } = 0.855

which is much smaller than the 1.33 value suggested as the minimum value for good process capability.

(12-2) $$D = \frac{Estimated\ process\,mean - No\min al}{\tfrac{1}{2}(Tolerance\,spread)}$$

$$D = \frac{\overline{X}' - No\min al}{\tfrac{1}{2}(USL - LSL)}$$ = { (0.72 – 0.70) } / { ½ (0.9 - .05) } = 0.1

(12-4) $$C_{pk} = \frac{Min\left\{\left|USL - \overline{X}'\right|, \left|LSL - \overline{X}'\right|\right\}}{3\sigma'}$$

$\left|USL - \overline{X}'\right|$ = 0.9 – 0.72 = 0.18

$\left|LSL - \overline{X}'\right|$ = 0.72 - .5 = 0.22

C_{pk} = 0.18 / { 3 (0.078) } = 0.77

7.

	Problem 12.2	Problem 12.6	% difference
Cp	0.99	0.855	(.86-.99)/.99 => - 13%
D	0.123	0.1	(.10-.12)/.12 => - 17%
Cpk	0.87	0.77	(.77-.87)/.87 => - 11%

The lower values for the data in Figure 12-A (Problem 6) indicate a process producing data with a wider distribution – a less "capable process.

8. Will need the nominal hole diameter, and with equal bilateral limits the nominal diameter is (6.70 mm + 6.00 mm) / 2 = 6.35 mm

a. Process Capability

(12-1) $$C_p = \frac{Tolerance\,spread}{6\sigma'}$$

Tolerance spread = 6.70 mm – 6.00 mm = 0.70 mm

$$\sigma' = \overline{R} \big/ d_2$$

$\overline{R}$ = 0.274 mm

and for n = 5 , (Figure 12-13)

d_2 = 2.33

σ' = 0.274 / 2.33 = 0.118 mm

C_p = 0.70 mm / { 6 (0.118 mm } = 0.989

(12-2) $$D = \frac{Estimated\ process\,mean - No\min al}{\frac{1}{2}(Tolerance\,spread)}$$

$$D = \frac{\overline{X}' - No\min al}{\frac{1}{2}(USL - LSL)} =$$

the parent population mean is estimated by $\overline{X}'$

$\overline{X}'$ = 6.299

$USL - LSL$ = 6.70 mm – 6.00 mm = 0.70 mm

Nominal hole diameter = 6.35 mm

D = (6.3 mm – 6.35 mm) / { ½ (0.70 mm) } = - 0.143

(12-4) $$C_{pk} = \frac{Min\left\{\left|USL - \overline{X}'\right|, \left|LSL - \overline{X}'\right|\right\}}{3\sigma'}$$

$\left|USL - \overline{X}'\right|$ = 6.70 mm – 6.3 mm = 0.4 mm

$\left|LSL - \overline{X}'\right|$ = 6.3 mm – 6 mm = 0.3 mm

C_{pk} = 0.3 mm / { 3 (0.118 mm) } = 0.847

b. σ control chart, Figure 12-13 contains relevant information, especially

$$\sigma = \sqrt{\frac{\sum_{i}^{n}\left(X_i - \overline{X}\right)^2}{n-1}}$$

Note: the calculated values, Total, Mean and Range, are incorrect for Lot No. 3

Without further information the control limits are set to 3*(standard deviation of the sample standard deviations). Also, some supplementary content is added to this solution. Specifically, control limits are also set using arguments similar to those in Section 12.3 that result in the A_2, D_3 and D_4 coefficients. Standard texts, e.g., Quality Control and Industrial Statistics, A. J. Duncan, Irwin, present control limits for standard deviation charts as

LCL = B_3 * (average value of sample standard deviations)
UCL = B_4 * (average value of sample standard deviations)

Finally, if the Lower Control Limit is less than zero representing reality calls for setting it to zero.

n	B_3	B_4
3	0	2.568
4	0	2.266
5	0	2.089

Process Capability – using Sigma Chart

$\sigma' = \overline{\sigma}$ = 0.109 mm

$\overline{X}'$ = 6.30 mm

(12-1) $C_p = \dfrac{Tolerance\,spread}{6\sigma'}$

for σ' = 0.0021

C_p = { (6.70 – 6.00) mm} / { 6 (0.109 mm) } = 1.070

(12-4) $C_{pk} = \dfrac{Min\left\{\left|USL - \overline{X}'\right|, \left|LSL - \overline{X}'\right|\right\}}{3\sigma'}$

$\left|USL - \overline{X}'\right|$ = (6.70 – 6.30) mm = 0.40 mm

$\left|LSL - \overline{X}'\right|$ = (6.30 – 6.00) = 0.30 mm

C_{pk} = 0.30 / { (3) (0.109) }= 0.917

c. The charts below were developed using
i. not including the X5 measurements, so *n* = 4
ii. not including X3 and X5 measurements, *n* = 3

i.

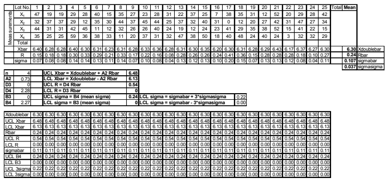

	Lot No.	1	2	3	4	5	6	7	8	9	10	11	12	13	14	15	16	17	18	19	20	21	22	23	24	25	Total	Mean	
Measurements	X_1	47	19	19	29	28	40	15	35	27	23	28	31	22	37	25	7	38	35	31	12	52	20	29	28	42			
	X_2	32	37	37	29	12	35	30	44	37	45	44	25	37	32	40	31	0	12	20	27	42	31	47	27	34			
	X_3	44	31	31	42	45	11	12	32	26	26	40	24	19	12	24	23	41	29	35	38	52	15	41	22	15			
	X_4	35	25	25	59	36	38	33	11	20	37	31	32	47	38	50	18	40	48	24	40	24	3	32	32	29			
	Total																												
	Xbar	6.40	6.28	6.28	6.40	6.30	6.31	6.23	6.31	6.28	6.33	6.36	6.28	6.31	6.30	6.35	6.20	6.30	6.31	6.28	6.29	6.43	6.17	6.37	6.27	6.30		**6.30**	Xdoublebar
	R	0.15	0.18	0.18	0.30	0.33	0.29	0.21	0.33	0.17	0.22	0.16	0.08	0.28	0.26	0.26	0.24	0.41	0.36	0.15	0.28	0.28	0.28	0.18	0.10	0.27		**0.24**	Rbar
	sigma	0.07	0.08	0.08	0.14	0.14	0.13	0.11	0.14	0.07	0.10	0.08	0.04	0.13	0.12	0.13	0.10	0.20	0.15	0.07	0.13	0.13	0.12	0.08	0.04	0.11		**0.107**	sigmabar
																												0.037	sigmasigma

n	4		**UCL Xbar = Xdoublebar + A2 Rbar**	**6.48**		
A2	0.73		**LCL Xbar = Xdoublebar - A2 Rbar**	**6.13**		
D3	0		**UCL R = D4 Rbar**	**0.54**		
D4	2.28		**LCL R = D3 Rbar**	**0**		
B3	0		**UCL sigma = B4 (mean sigma)**	**0.24**	**LCL sigma = sigmabar + 3*sigmasigma**	0.22
B4	2.27		**LCL sigma = B3 (mean sigma)**	**0**	**LCL sigma = sigmabar - 3*sigmasigma**	0.00

Xdoublebar	6.30	6.30	6.30	6.30	6.30	6.30	6.30	6.30	6.30	6.30	6.30	6.30	6.30	6.30	6.30	6.30	6.30	6.30	6.30	6.30	6.30	6.30	6.30	6.30	6.30
UCL Xbar	6.48	6.48	6.48	6.48	6.48	6.48	6.48	6.48	6.48	6.48	6.48	6.48	6.48	6.48	6.48	6.48	6.48	6.48	6.48	6.48	6.48	6.48	6.48	6.48	6.48
LCL Xbar	6.13	6.13	6.13	6.13	6.13	6.13	6.13	6.13	6.13	6.13	6.13	6.13	6.13	6.13	6.13	6.13	6.13	6.13	6.13	6.13	6.13	6.13	6.13	6.13	6.13
Rbar	0.24	0.24	0.24	0.24	0.24	0.24	0.24	0.24	0.24	0.24	0.24	0.24	0.24	0.24	0.24	0.24	0.24	0.24	0.24	0.24	0.24	0.24	0.24	0.24	0.24
UCL R	0.54	0.54	0.54	0.54	0.54	0.54	0.54	0.54	0.54	0.54	0.54	0.54	0.54	0.54	0.54	0.54	0.54	0.54	0.54	0.54	0.54	0.54	0.54	0.54	0.54
LCL R	0.00	0.00	0.00	0.00	0.00	0.00	0.00	0.00	0.00	0.00	0.00	0.00	0.00	0.00	0.00	0.00	0.00	0.00	0.00	0.00	0.00	0.00	0.00	0.00	0.00
sigmabar	0.11	0.11	0.11	0.11	0.11	0.11	0.11	0.11	0.11	0.11	0.11	0.11	0.11	0.11	0.11	0.11	0.11	0.11	0.11	0.11	0.11	0.11	0.11	0.11	0.11
UCL B4	0.24	0.24	0.24	0.24	0.24	0.24	0.24	0.24	0.24	0.24	0.24	0.24	0.24	0.24	0.24	0.24	0.24	0.24	0.24	0.24	0.24	0.24	0.24	0.24	0.24
LCL B3	0.00	0.00	0.00	0.00	0.00	0.00	0.00	0.00	0.00	0.00	0.00	0.00	0.00	0.00	0.00	0.00	0.00	0.00	0.00	0.00	0.00	0.00	0.00	0.00	0.00
UCL 3sigma	0.22	0.22	0.22	0.22	0.22	0.22	0.22	0.22	0.22	0.22	0.22	0.22	0.22	0.22	0.22	0.22	0.22	0.22	0.22	0.22	0.22	0.22	0.22	0.22	0.22
LCL 3sigma	0.00	0.00	0.00	0.00	0.00	0.00	0.00	0.00	0.00	0.00	0.00	0.00	0.00	0.00	0.00	0.00	0.00	0.00	0.00	0.00	0.00	0.00	0.00	0.00	0.00

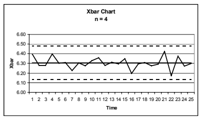

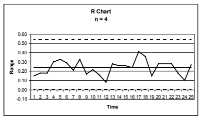

ii.

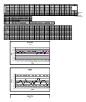

The Xbar and sigma charts give the following values for $\overline{X}'$ (estimated from the grand average) and σ'. The calculations of the process capability measures are shown below.

n	$\overline{X}'$	σ'	C_p	D	C_{pk}
5	6.30*	0.109	1.070	-0.143	0.917
4	6.30	0.107	1.090	-0.143	0.935
3	6.31	0.106	1.101	-0.114	0.975

* corrected value, different from value given in problem statement

(12-1) $$C_p = \frac{Tolerance\ spread}{6\sigma'}$$

= { (6.7 – 6.0) } / { 6 (0.109) } = 1.070 for n = 5
= { (6.7 – 6.0) } / { 6 (0.107) } = 1.090 for n = 4
= { (6.7 – 6.0) } / { 6 (0.106) } = 1.101 for n = 3

(12-2) $$D = \frac{\overline{X}' - Nominal}{\frac{1}{2}(USL - LSL)}$$

= { 6.30 – 6.35 } / { ½ (6.70 – 6.00) } = -0.143 for n = 5
= { 6.30 – 6.35 } / { ½ (6.70 – 6.00) } = -0.143 for n = 4
= { 6.31 – 6.35 } / { ½ (6.70 – 6.00) } = -0.114 for n = 3

(12-4) $$C_{pk} = \frac{Min\left\{\left|USL - \overline{X}'\right|, \left|LSL - \overline{X}'\right|\right\}}{3\sigma'}$$

$$\left|USL - \overline{X}'\right|$$

= 6.70 – 6.30 = 0.40 for n= 5
= 6.70 – 6.30 = 0.40 for n = 4
= 6.70 – 6.31 = 0.39 for n = 3

$$\left|LSL - \overline{X}'\right|$$

= 6.30 – 6.00 = 0.30 for n = 5
= 6.30 – 6.00 = 0.30 for n= 4
= 6.31 – 6.00 = 0.31 for n = 3

C_{pk} = 0.30 / { 3 (0.109) } = 0.917 for n = 5

C_{pk} = 0.30 / { 3 (0.107) } = 0.935 for n = 5

C_{pk} = 0.31 / { 3 (0.106) } = 0.975 for n = 5

Case Study:

Boring QC Chart Blunders

1. This is an Xbar chart showing the average values of the 19 samples of 4 parts.

2. With control limits of about 3 σ = UCL – Mean = 0.00038 – 0.00017
σ = 0.00006 in

3. The center line is the average of the sample means, not the mean of the population from which the samples were drawn.

4. Cp = (USL – LSL) / 6 σ' = {2 (0.0005) } / { 6 (0.00006) = 2.78
Cpk = MIN { | USL – Xbar' | , | LSL – Xbar' | } / 3 σ' = 0.00033 / 0.00018 = 1.83

5. The specification limits are not measured quantities and so do not belong on the chart.

CHAPTER 13
Fundamentals of Casting

Review Questions

1. Materials processing is the science and technology by which a material is converted into a useful shape with a structure and properties that are optimized for the intended service environment. More loosely, processing is "all that is done to convert stuff into things".

2. The four basic families of shape production processes are:
(1) Casting, (2) Material removal, (3) Deformation processes, and (4) Consolidation processes. Casting processes can produce extremely complex shapes, but may have defects related to shrinkage and porosity. Material removal processes can have outstanding precision, but generate scrap as the material is cut away. Deformation processes can offer high rates of production, but require powerful equipment and dedicated tools or dies. Consolidation processes can produce large or complex shapes, but the joints may possess properties that are different from the base material.

3. Cast parts can range in size from a fraction of an inch and a fraction of an ounce to over 30 feet and many tons. Moreover, casting can incorporate complex shapes, hollow sections or internal cavities, and irregular curved surfaces.

4. In the single-use molding processes, a new mold must be made for each casting. In contrast, multiple-use molds can be used for repeated castings and are generally made of metal or graphite. They are quite costly and their use is generally restricted to large production runs where their cost can be distributed over a large number of castings. For small quantities, the single-use molds would be preferred.

5 . when the molten metal is introduced into the mold, all of the air and gases in the mold prior to pouring and those generated by the action of the hot metal on the mold must be able to escape the mold cavity. This will enable the molten metal to completely fill the mold cavity and produce a fully dense casting that is free from defects.

6. If the mold provides too much restraint to the solidifying and cooling casting, the casting will crack as it tries to contract while its strength is low.

7. A casting pattern is an approximate duplicate of the final casting around which the mold material will be packed to form the mold cavity. A flask is the box that contains the molding aggregate. A core is a sand shape that is inserted into the mold to produce internal features in a casting, such as holes or passages. A mold cavity is the void into which the molten metal is poured and solidified to produce the desired casting. A riser is an extra void created in the mold that will be filled with the

8. The gating system of a mold is made up of a pouring cup, sprue, runners and gates. Its purpose is to deliver the molten metal from the outside of the mold to the mold cavity.

9. A parting line or parting surface is the interface which separates the cope and drag halves of the mold, flask, pattern, or core.

10. Draft is the taper on a pattern and so there will be taper on the casting. Draft permits the pattern to be withdrawn from the mold while minimizing damage to the mold (and the casting to be removed more easily from permanent molds).

11. The two steps of solidification are nucleation and growth. During nucleation, a stable solid particle forms from the molten metal and forms the beginning of a crystal or grain in the finished casting. During the growth stage, the heat of fusion is continually extracted from the liquid material and the nucleated solid increases in size.

12. At the equilibrium melting temperature, the bulk energies of the liquid and solid states are equivalent. However, for a solid particle to form in the liquid, additional energy must be provided to create the new surfaces or interfaces. Thus, for solid formation to occur generally requires that the temperature drop to several degrees below the melting temperature. Here the change in state from liquid to solid releases sufficient energy that the net result (with the additional energy required to create interfaces) is a movement to a lower energy state.

13. Since each nucleation event produces a grain or crystal in a casting, and fine grain materials possess improved strength and mechanical properties, attempts to promote nucleation would be rewarded by the production of superior castings. This practice of promoting nucleation is known as inoculation or grain refining.

14. In most casting operations, heterogeneous nucleation occurs at existing surfaces, such as mold or container walls, or solid impurity particles within the molten liquid.

15. Directional solidification, in which the solidification interface sweeps continuously through the material, can be used to assure the production of a sound casting. The molten material on the liquid side of the interface flows into the mold to continuously compensate for the shrinkage that occurs as the material changes from liquid to solid.

16. The cooling curve for a pure metal contains information that will reveal the pouring temperature, superheat (the difference between the pouring temperature and the freezing temperature of the metal), the cooling rate, the freezing temperature (thermal arrest), and the solidification times (both total and local).

17. Superheat is the difference between the temperature of the molten material when it is poured into the mold and the material freezing temperature. Superheat is related to the time between poring and solidification and so is a factor in the time available for complete mold filling.

18. The term, freezing range, refers to the difference between the liquidus and solidus temperatures, i.e. the temperature range through which the material transforms from all liquid to all solid.

19. The amount of heat that must be removed from a casting to cause it to solidify is directly proportional to the amount of metal or the volume of the casting. conversely, the ability to remove heat from a casting is directly related to the amount of exposed surface area through which the heat can be extracted. The total solidification time, therefore can be expressed as proportional to the volume divided by the area to some exponential power - Chvorinov's Rule.

20.The mold constant, B, in Chvorinov's Rule depends upon the metal being cast, the mold material, mold thickness, and the amount of superheat.

21. Since cooling rate influences the structure of the casting it has large effects on casting properties. Usually the faster the cooling rate the finer and more uniform the casting microstructure and the stronger the part.

22. The chill zone of a casting is a narrow band of randomly oriented crystals that forms on the surface of a casting. Rapid nucleation begins here due to the presence of the mold walls and the relatively rapid surface cooling.

23.The columnar region is clearly the lease desirable. Because of the selective growth process, these crystals are long, thin columns with aligned, parallel, crystal structure. Reflecting this preferred orientation, the properties will be quite anisotropic (varying with different direction) .

24. The equiaxed zone has a structure characterized by a larger number of grains per volume, smaller grains, more spherical grains, randomly oriented grains and so more isotropic properties than the other regions of the casting, the chill zone and the columnar zone. To promote the formation of a larger equiaxed zone more nucleation sites are needed and this situation is promoted by lower pouring temperature, alloy additions and the use of innoculants.

25. Dross or slag is the term given to the metal oxides which can be carried with the molten metal during pouring and filling of the mold. Special precautions during melting, pouring and process design can prevent the dross from becoming part of the finished casting. Fluxes can be used to protect the molten metal during melting or vacuum or protective atmospheres can be employed. Dross can be skimmed from the ladles prior to pouring or the metal can be extracted from the bottom of the molten pool. Finally, gating systems can be designed to trap the dross before it enters the mold cavity.

26. Gas porosity can be eliminated by preventing the gas from initially dissolving in the molten metal, using such techniques as vacuum melting, controlled atmospheres, flux blankets, low superheats, and careful handling and pouring. In addition, dissolved gases can be removed by vacuum degassing, gas flushing, or reaction to produce a removable

product compound.

27. Fluidity is the ability of a molten metal to flow and fill the mold - a measure of its runniness. While there is no single method for its measurement, various ^{33}standard molds'^{3} can be used where the results are sensitive to metal flow. One approach is to use a long thin spiral that progresses outward from a central pouring sprue. The length of the casting is a direct indication of fluidity.

28. Misruns are defects in the casting due to the molten material beginning to freeze before the mold is completely filled. Misruns are due to large differences in temperature in the molten material in the mold and so are due to poor mold design leading to regions of unusually low temperature and to too low a pouring temperature, i.e., insufficient superheat. The resulting defects are regions of greatly different properties and structures over the casting since molten metal is freezing at different conditions and is solidifying around already solidified material.

29. As molten material temperature and mold temperature increase
- the melt fluidity increases allowing the material possibly to flow into small spaces between sand grains and on solidification sand grains are in the casting,
- chemical activity rate increases and melt-mold reactions are accelerated leading to reactions which may alter casting material structure and properties.

30. The rate of metal flow through the gating system is important, as is the rate of cooling as it flows. Slow filling and high heat loss can result in misruns and cold shuts. Rapid rates of filling can result in erosion of the gating system and mold cavity and produce entrapped mold material in the final casting .

31. Turbulence of the molten metal in the gating system and mold cavity could promote excessive solution of gases, enhance oxidation of the metal, and accelerate mold erosion.

32. The choke is the smallest cross section region of the sprue-runner system. The choke controls the rate of flow into the mold and also the location of the slowest flow. So, the closer the choke to the sprue entrance the slower the flow through the entire runner system and the smoother the flow and the greater the mold filling time. If the choke is in the runner near the mold cavity, flow rate through the sprue-runner system is faster and more turbulent.

33. Gating systems can be designed to trap dross and mold material before they enter the mold cavity. Since the lower-density materials will rise to the top of the molten metal, long, flat runners with gates that exit from the lower portion of the runner are effective. Since the first metal to enter the mold is most likely to contain the dross, runner extensions and wells can be used to catch this material and prevent it from entering the mold. Screens or ceramic filters can also be used.

34. Turbulent-sensitive materials, such as aluminum and magnesium, and alloys with low melting points generally employ gating systems that concentrate on eliminating

turbulence and trapping dross. Turbulent-insensitive alloys, such as steel, cast iron, and most copper alloys, and alloys with high melting points, generally use short, open gating systems that provide for quick filling of the mold cavity.

35. The three stages of contraction or shrinkage as a liquid is converted into a finished casting are: shrinkage of the liquid, solidification shrinkage as the liquid turns to solid, and solid metal contraction as the solidified material cools to room temperature .

36. Alloys with large freezing ranges have a wide range of temperatures over which the material is in a mushy state. As the cooler regions complete their solidification, it is almost impossible for additional liquid to feed into the shrinkage voids. The resultant structure tends to have small, but numerous shrinkage voids dispersed throughout.

37.A primary concern regarding the contraction of a hot casting after it has solidified is the change in dimensions. In addition, if the product is constrained in a rigid mold, tensile stresses can be induced that may cause cracking. It is best to eject the castings as soon as solidification is complete.

38. By having directional solidification sweeping from the extremities of the mold to the riser, the riser can continuously feed molten metal and will compensate for the shrinkage of the entire mold cavity.

39. Based on Chvorinov's Rule, a good shape for a riser would be one with a small area per unit volume. The ideal shape would be a sphere, but this is rather impractical to the patternmaker and molder. Therefore, the best practical shape for a casting riser would probably be a cylinder with height approximately equal to the diameter.

40. A top riser is one that sits on top of a casting. A side riser is located adjacent to the mold cavity, displaced along the parting line. Open risers are exposed to the atmosphere. Blind risers are contained entirely within the mold. Live risers receive the last hot metal that enters the mold. Dead risers receive metal that has already flowed through the mold cavity.

41. When using Chvorinov's Rule to calculate the size of a riser, one makes several assumptions. Since both the riser and the mold cavity set in the same mold and receive the same metal, the mold constant, B, is assumed to be the same for both regions. The equations in the text assume N=2 and a safe difference in solidification time to be 25%.

42. Chills are used to speed solidification of the casting. Both internal and external chills absorb heat and so not only decrease solidification time but, in extreme cases, can also effect casting microstructure and properties by causing directional solidification.

An insulating sleeve is a low heat flow material placed around the riser to maintain the material in the riser in a molten state and so decrease the needed riser size.

Exothermic materials are added to the mold around the sides and top of the riser. The heat produced by the exothermic reaction maintains the material in the riser in the molten state and so enables the use of smaller risers.

Riser size is important since material that solidifies in the riser is excess material in the sense that it is not used in producing parts.

43. Casting patterns generally incorporate several types of modifications or allowances. These include shrinkage allowances to compensate for thermal contraction, draft to permit pattern removal, machining allowances, distortion allowance, and compensation for thermal changes in mold dimensions.

44. A shrink rule is a simple measuring device that is larger than a standard rule by the desired shrink allowance. The measurements on the shrink rule are the final dimensions of the part after thermal shrinkage has occurred.

45. Draft (see Question 10) is used on casting patterns to enable the pattern to be withdrawn from the mold without the sand particles being broken away from the mold surface.

46. Pattern allowances increase the size of the pattern, and thus the size and weight of a casting and possibly the amount of material that must subsequently be removed by machining to form a finished product. Therefore, efforts are generally made to reduce the various allowances.

47. At a very high level of description the casting process involves fluid flow filling a mold, heat flow causing solidification and the effects of mold cavity design on these processes. So any interaction between parting plane location and part shape, fluid flow and heat transfer affects the casting process. The location of the parting plane with respect to the mold cavity will influence process design, e.g.,
- number of cores,
- method of core support,
- sprue and gate system configuration,
- the relative volume of the part compared to the sprue-runner-riser volume,

and also the quality of the final part since
- part accuracy and part characteristics such as porosity depend on the solidification process which depends on overall mold design including parting plane location.

48. In general, at changes in shape of solid material bodies stress concentrations or stress raisers occur. This happens in castings and parts made by other processes.

During the production of cast parts casting defects can arise where sections meet. The effective section thickness at the intersection of casting sections is larger than the thickness of the intersecting sections. The increased section thickness region cools and solidifies more slowly than the thinner sections on either side of it. The difference in cooling rates between the relatively thicker intersection region and the thinner surrounding sections can cause problems. Differences in cooling rate and shrinkage cause residual stress and local shrinkage cavities as the adjacent regions adapt to each others temperature and amount of shrinkage. Also, the locally thicker, larger volume region will remain at a higher temperature during solidification this can result in porosity.

Problems:

1. Plate dimension: 2” x 4” x 6”; H/D = 1.5; n =2

$t_{riser} = 1.25\ t_{casting}$

$(V/A)^2_{riser} = 1.25\ (V/A)^2_{casting}$

$(V/A)_{riser} = 1.15\ (V/A)_{casting}$

$\{ (\pi/4) D^2 H \} / \{ 2(\pi D^2/4) + \pi DH \} =$

$\{ (1.15)(2 \times 4 \times 6) \} / \{2(2x4) + 2(2x6) + 2(4x6) \}$

with H = 1.5 D

$\{ n \pi D^3 / 8) / 2 \pi D^2 = 1.15 (0.545)$

$3 D / 16 = 0.627$

D = 3.34 in, H = 5.02 in, Vriser = 43.98 in3

Yield = Vol casting / (Volcasting / Vriser) = 48 / (48 + 43.98) = 52%

2. If the riser sits on top of the casting, heat is not lost from either the casting or the riser at their junction. This interface area should be subtracted from both the area of the casting and the area of the riser in Chvorinov's Rule:

$\{ (\pi D^2 H) / 4 \} / \{ 2(\pi D^2/4) + \pi DH - \pi D^2/4 \} = \{ 1.15 (48) \} / \{ 88 - \pi D^2/4 \}$

$(3D / 14)(88 - \pi D^2/4) = 55.2$

$0.168D^3 – 18.86D^2 + 55.2 = 0$

D = 3.25 in, H = 4.875 in and $V_{riser} = 40.44\ in^3$

Yield = 48 / (48 + 40.44) = 54%

3. For the 3" x 5" x 10" solid

$t_5 = B\ (V/A)^2$

$11.5= B(3 \times 5 \times 10)^2 / \{ 2 (3x5) + 2 (3x10) + 2 (5x10)]^2$

$11.5 = B (150)^2 / (30 + 60 + 100)^2 = B (150 / 190)^2 = B (0.789)^2 = 0.623 B$

B = 11.5 / 0.623 = 18.46

For a casting of 0.5" x 8" x 8" cast under the same conditions:

$t_s = 18.46 \text{ x } (.5\text{x}8\text{x}8)^2 \ / \ [2\ (.5\text{x}8) + 2(.5\text{x}8) + 2(8\text{x}8)]^2$

$= 18.46 \text{ x } (32)2 \ / \ [\ 8 + 8 + 128]^2$

= 0.91 min

Case Study:

The Cast Oil-Field Fitting

1. The binder for the no-bake sand is a polymerizable alkyd-oil/urethane material. Gases can be evolved from the binder when it is heated and the polymer material begins to depolymerize. In fact, there are two possibilities for gas problems with this material. If the binder had been completely polymerized during the manufacture of the core, the high temperature of the cast iron could break down the binder into small fragments having low molecular weight and low boiling point, thus producing the bubbles. In addition, this particular type of binder has a long curing time --12 to 24 hours are required for the polymerization to complete at room temperature. If the core or the mold were not completely cured, there would already be low molecular weight, low boiling point, constituents present that could form gases as soon as the liquid iron entered the mold cavity.

The gases are located near a surface, just beneath the core. It appears that the gas bubbles formed, started to float, and were trapped by the core.

Vents could be added to the core and/or mold to give the gases an easier path to escape through the sand, rather than becoming trapped in the liquid metal. In addition, we want to make sure that the binder is completely cured prior to pouring. A coarser grained sand with a narrow distribution of sand grain sizes will provide higher permeability and permit easier gas removal. Finally, a switch to a different type of binder could reduce the amount of gas produced from that of the oil/urethane.

2. Penetration occurred by liquid metal flowing between the sand grains of the core. It appears that the core was not properly compacted, with relatively large voids between the sand grains. The core may have also had very large sand grains with a very narrow distribution of sizes (although this is contrary to the conclusion of question 1. The core also gets hotter than the mold, since the core is completely surrounded by liquid metal. In addition, the region showing the penetration is adjacent to the gate where it will have received the molten metal first and would have been hotter longer than the remainder of the mold. The long exposure to high heat may have led to the breakdown of the binder and helped the liquid metal penetrate the sand. Finally, the defect was only noted near the bottom of the casting because of the higher metallostatic pressure head (the pressure of the column of molten metal) helping to force the metal between the sand grains.

3. The enlargement could have occurred because the mold was weak and the high

metallostatic pressure crushed the sand, thus enlarging the mold cavity. Better compaction during mold making would produce denser, and stronger, sand. Using a larger amount of binder might also help, but gas problems would tend to become more severe. Another possible cause would be erosion, because the enlargement occurred next to the gate where all of the liquid metal entered the mold cavity. The sand near the gate becomes the hottest, and the binder may have decomposed prematurely. The use of several gates, rather than just one, might help reduce the problem.

4. Penetration over all of the surfaces is likely due to the sand being too coarse and a narrow distribution of sand grains, or perhaps due to a high pouring temperature. Reducing the pouring temperature would be helpful. Another possible cure would be to use finer sands, perhaps with the addition of silica flour to the aggregate -- although lower permeability and metal-mold defects, such as burn-on might become problems.

5. Both the molds and the cores could be reclaimed. The binders are organic, and, with luck, most of the organic material will have broken down during the casting and cooling process. If the organic breakdown is not sufficient, some form of reclamation process can be used. A mechanical reclamation system would perhaps fire the sand grains at a hard metal plate, where the impact would break the brittle polymer binder of f of the sand grain surface. A thermal reclamation system, in which the sand is heated to a high temperature (usually above 1000^0F), will burn off any residual binder. The processed sand is then carefully screened to assure the proper size and distribution of sizes prior to rebonding and reuse.

CHAPTER 14
Expendable-Mold Casting Processes

Review Questions

1. There is a variety of casting processes. Many casting process characteristics are similar but each has distinct characteristics that determine process requirements and cast part properties. Some of the factors that influence choice of casting process are
- quality of cast surface required,
- desired part dimensional precision,
- part production rate,
- the complexity of the process and process tooling that are required to produce a particular part,
- cost of mold or die,
- material characteristics as they determine feasible casting processes.

2. Using molds and patterns as process classification factors results in three general categories of casting processes
i. Single-use molds with multiple-use patterns
ii. Single-use molds with single-use patterns
 - these two types of processes are often called expendible mold casting processes
iii Multiple-use molds

3. Frequently cast metals are iron, steel, aluminum, brass, bronze. magnesium, zinc alloys and nickel-based superalloys. The large range of properties and melting temperatures indicates that almost all metals can be cast, given enough process development resources. However, there are "easy-to-cast" materials and these are typically used. Materials may be inherently "castable" or alloys specially formulated to produce acceptable parts in easily designed and controlled casting processes.

4. The most common casting process is sand casting. Green sand casting is used to produce about 90% of the casting produced in the United States. Its wide use indicates that it is probably the most versatile.

5. A casting pattern is a duplicate of the part to be made, modified in accordance with the requirements of the casting process, metal being cast, and particular molding technique that is being used.

6. The material used for construction of a casting pattern is determined primarily by the number of castings to be produced, but is also influenced by the size and shape of the casting, the desired dimensional precision, and the molding process. Wood patterns are easy to make and are used when quantities are small. Unfortunately, wood is not very dimensionally stable due to warping and swelling with changes in the humidity. Metal patterns are more expensive, but are more stable and more durable. Hard plastics, such as

urethane, have been used, and expanded polystyrene is used for single-use patterns. Expanded polystyrene and wax can be used for single-use patterns.

7. The simplest type of pattern is the one-piece or solid pattern. Since it is the simplest it is usually the least expensive.

8. In casting a pattern is used to form the mold cavity. In making a two part mold the mold material is formed around the pattern and then the pattern is removed leaving the mold cavity. One way to form the pattern, and the form it the mold cavity, is to use a two part, or split, pattern. The two parts of the pattern are fixed to the match plate, the mold formed around the pattern-match plate, the mold halves separated and the pattern-match plate removed.

So, the match plate is a plate to which parts of the pattern are attached. It aids molding in providing a simple structure to help form the pattern and mold cavity. In a general sense the match plate is a fixture for creating the pattern.

9. With a cope-and-drag pattern, the cope and drag halves of the split pattern are mounted onto separate match-plates, thereby permitting larger molds to be handled easier or two separate machines to be simultaneously producing the two portions of the mold.

10. A loose-piece pattern is frequently used when the object to be cast has protruding sections or geometric features such that a more traditional pattern could not be removed from the molding sand.

11. The four requirements of a molding sand are: refractoriness, cohesiveness, permeability, and collapsibility. Refractoriness is provided by the basic nature of the sand. Cohesiveness is provided by coating the sand grains with clays that become cohesive when moistened. Permeability is a function of the size of the sand particles, the amount and type of clay or other bonding agent, the moisture content, and the compacting pressure. Collapsibility is sometimes promoted by adding cereals or other organic materials that burn out when exposed to the hot metal to reduce the volume of the solid bulk and decrease the strength of the restraining sand.

12. The four requirements of a molding sand are not consistent with one another, so good molding sand is always a compromise between the various factors. The size of the sand particles, the amount of bonding agent, the moisture content, and the organic matter are all selected to attain an acceptable compromise. For example, increasing the amount of clay will enhance cohesiveness, but decrease permeability.

13. A muller is a mixing-type device designed to uniformly coat the grains of sand with the additive agents. The discharge frequently contains some form of aerator which prevents the sand from packing too hard during handling.

14. Standard tests have been developed to maintain consistent sand quality by evaluating: grain size, moisture content, clay content, compactibility, and mold hardness,

permeability and strength.

15. A "standard rammed specimen" is a 2" in diameter, 2" long sand specimen that is produced by means of a standard and reproducible form of compaction. A sufficient amount of sand is placed in a 2-inch diameter steel tube so that after a 14-pound weight is dropped three times from a height of 2-inches, the final height of the sand specimen is within 1/32 of an inch of 2 inches .

16. Permeability is a measure of how easily gases can pass through the narrow voids between the sand grains. A casting mold material must possess permeability to permit the escape of air that was in the mold before pouring, plus gases generated from the molding material itself when materials in the molding sand burn, volatilize, or deteriorate when in contact with the hot metal.

17. Water interacts with the surface of clays so that interparticle bonding sites are activated. Too little moisture and bonding sites are limited resulting in low compressive strength. Too much moisture and although all surfaces are covered and bonding sites maximized, the water acts as a lubricant between grains decreasing the strength from the maximum value at the optimum moisture content.

18. The basic size and geometry of the sand grains can be very influential in determining the properties of the molding material. Round sand grains give good permeability and minimize the amount of clay required. Angular sands give better green strength because of the mechanical interlocking of the grains. Large-grain sands provide good permeability and better resistance to high-temperature melting and expansion. Fine-grain sands provide good surface finish on the finished casting. Uniform size sands give good permeability, while a wide size distribution provides a better surface finish.

19. When hot metal is poured into a silica sand mold, the silica sand heats up, undergoes one or more phase transformations, and has a large expansion in volume. Since only the surface sand heats up and expands, while the remainder stays cool, the mold experiences nonuniform expansion, and the hot surface may buckle or fold (sand expansion defects).

20. Since sand expansion defects are caused by nonuniform sand expansion and phase transformations across the mold, steps that minimize temperature gradients, sand expansion and phase transformations will minimize sand expansion defects. Ways to minimize the effects of expansion and phase transformations include

- using sand particles with shapes that relieve expansion stresses by allowing easier particle motion,
- material such as excess clay and cellulose can be added to absorb expansion,
- use of different mold materials that do not undergo phase transitions and/or have lower expansion on heating.

21. Penetration of the hot metal between the sand grains can be produced by high pouring temperatures (excess fluidity), high metal pressure (possibly due to excess cope height or pouring from too high an elevation above the mold), or the use of coarse, uniform sand

particles.

22. Hot tears are cracks that form in castings during solidification. As the molten metal cools and solidifies it shrinks. If the mold exerts sufficient constraint on the solid, but still hot. weak and shrinking metal, stresses may be large enough to from cracks.

Hot tearing can be decreased by designing casting processes so that the stress that arise are minimized, e.g., by assuring collapsibility of the sand mold during part solidification.

23. If sand is placed on top of a pattern and the assembly is then lifted and dropped several times (jolting), the sand is packed firmly around the pattern, with density diminishing as one moves further from the pattern. When squeezing is used, the maximum density is adjacent to the squeeze head. Density then diminishes as the distance from the squeeze head increases. The jolt-squeeze combination combines these two results to produce a more uniform distribution of sand density.

24. After the mold is produced in the flask it is removed from the flask and may be vulnerable to damage. A metal band, called a slip jacket, can be placed around the mold to help protest the mold from damage during handling and pouring.

25. The vertically-parted flaskless molding machine produces blocks of sand that contain a cope impression on one side and a drag impression on the other. When assembled side-by-side, they produce a complete pattern, with one complete mold being provided per block of sand. Other methods require separate cope and drag segments, thereby requiring two blocks per mold.

26. Extremely large molds are often constructed in sunken pits, and are often made as an assembly of smaller sections of baked or dried sand.

27. The two major sources of problems with green sand are low strength and high moisture.

28. Dry-sand molds lack popularity because of the long times required for drying, the added cost for the drying operation, and the availability of practical alternatives.

29. In the carbon dioxide-sodium silicate molding method, the carbon dioxide is nontoxic and odorless, and no heating is required for curing. When hardened, however, the sands have poor collapsibility, making shakeout and core removal rather difficult. Here, the heating from the pour actually makes the mold material stronger.

30. No-bake sands use organic resin binders that cure by chemical reactions that occur at room temperature.

31. In the shell molding process, a thermoplastic binder is used to bond the sand grains and the "cure" is provided by the exposure of the sand and binder mixture to patterns that have been heated to temperatures in the range of 300-450^{0}F. The heat then cures a layer

of mold material adjacent to the pattern.

32. Shell molds have thin walls so the length of path for gases leaving the mold is short and mold permeability is high.

When shell molds are heated by the molten material some of the binder burns off. This leaves a weaker, high collapsibility, mold structure.

33. In the V-process, mold strength is obtained through the use of a specially-designed vacuum flask. When a vacuum is drawn, the sand packs to rather high hardness. In contrast, the Ef f-set process uses frozen water as a binder, and the molds are poured while in their frozen condition.

34. Cores are used to produce internal cavities or reentrant sections in a casting. These are features that would be extremely difficult to produce by alternative methods.

35. The major problems with green sand cores is their weakness. If they are long or narrow, they are prone to breaking and may not even be able to support themselves.

36. The binder in the core-oil process is a vegetable or synthetic oil. Oven drying causes the oil to cross-link or polymerize, bonding the grains of sand.

37. In the hot-box core-making process, a liquid thermosetting binder and a catalyst are used to bind the sand. When the sand contacts a heated core box, the elevated temperature induces curing within 10 to 30 seconds.

38. Room-temperature curing is the primary attraction of the cold-box process. No-bake and air-set sands have the same advantage, but use a mixed catalyst in place of permeated gas to induce the cure.

39. Shell-molded cores offer excellent permeability since they are generally hollow.

40. Since cores may be nearly surrounded by molten metal, they generally require greater permeability than the base molding sand. All gases must escape through the core prints. Excellent collapsibility is required to permit the core material to be easily shaken out from the interior of the casting.

41. Chaplets are small metal devices that provide support for cores and prevent them from shifting in the mold. They should be large enough so that they do not completely melt and permit the core to float, and small enough that the surface melts and fuses with the cast metal.

42. When plaster molds are made, plaster is mixed with water and hardening occurs by a hydration process. If a high-melting temperature metal is poured into a plaster mold, the rapid evolution of the hydration water can cause an explosion. Therefore, plaster molds are only used with the lower-melting temperature nonferrous metals and alloys.

43. Process and part characteristics for plaster casting and ceramic mold casting are given in Table 14-4 and Table 14-5. While there are differences in some part characteristics, (e.g., part thickness limit and tolerance) the most striking difference is the greatly different melting temperature of materials that can be cast. Ceramic casting allows high melting temperature metals to be cast.

44. Graphite molds are often specified for use with highly reactive materials, such as titanium, that would interact unfavorably with many of the more common molding materials.

45. The individual patterns for investment casting are usually made from a molten wax, although plastics and mercury have also been used.

46. Investment casting molds are preheated prior to pouring to assure that the molten metal will flow more readily to all thin sections and to give better dimensional control by permitting the mold and the metal to shrink together during cooling.

47. In investment casting a pattern is formed from a low melting temperature, low vaporization temperature material, often wax. The mold is produced by surrounding the pattern with the mold material. The mold cavity is produced when the pattern is removed by melting/vaporizing the pattern. In early process development with porous mold materials the melted wax from the pattern would migrate into the mold material and be lost.

48. Counter-gravity investment casting uses atmospheric pressure, either negative gage pressure vacuum or positive pressure to cause the molten metal to flow into a sprue down-cavity up mold. In contract to using gravity to cause melt flow into the mold, counter-gravity casting enables molten metal to be drawn up into the mold from below the melt surface. This means that
-the molten metal entering the mold is free of slag and dross,
- the molten metal in the mold has low level of inclusions.

Since after the mold cavity fills the melt in the sprue and runner system can flow back to the melt pool, more of the melted metal becomes product than is gravity casting in which the sprue and runner system solidifies.

At low pressure gradients the metal may flow with lower turbulence than in gravity casting processes.
At higher pressure gradients it is possible to fill thinner mold/part sections than in gravity casting.

Since melt fluidity is less of a concern in counter-gravity casting lower melt temperature can be used resulting in improved grain structure and part properties.

49. The necessity of removing a pattern from a mold often requires some design

modifications, a complex pattern, or special molding procedures. When pattern removal is not required, no draft needs to be incorporated on the pattern, complex single-piece patterns can be used, and it is not necessary to use mold segments, such as a cope and drag.

50. In both full-mold and lost-foam casting processes the pattern-sprue-runner system is made from expanded polystyrene. The differences between the processes is in how the pattern system is supported and the mold created. In the full mold process green or chemically bonded sand is used around the pattern and becomes the mold when the pattern is removed. In lost foam casting a thin ceramic layer is formed on the pattern before the pattern-coating is surrounded by unbonded sand.

In essence, in full mold casting a bonded sand mold is made while in lost foam casting a thin ceramic layer-unbonded sand mold is used.

51. The nature of evaporative pattern casting processes leads to advantages compared to other types of casting operations that include
- complex parts can be produced since pattern removal is not a concern,
- with no pattern or core removal necessary mold and part draft can be eliminated,
- cores and parting planes are not required and so simpler processes and less involved process control result,
- with simpler molds simpler runner systems are often possible leading to increased ratio of product weight to weight of metal pored,
- molten material tends to solidify from the furthest point in the mold to the sprue often eliminating the need for risers,
- particularly with lost-foam ceramic layer molds high precision parts with smooth surfaces can be produced,
- if backup sand used in the mold in not bonded it may be directly reused.

52. In shakeout the part, sprue-runner system, cores, etc. are separated from the flask and mold material. Since the mold is designed and made to withstand damage during the entire mold construction-casting process it is a substantial, relatively strong structure. Therefore,
- shakeout entails additional operations to obtain the part,
- the shakeout operations have the potential for damaging the part and so have to be carefully designed and operated.

In general, shakeout implies additional, involved processes.

53. Castings can be cleaned by abrasive means in which particles are caused to impact on the part and so mechanically remove adhering sand, oxide, scale and parting line burrs/flash. The abrasive media can be nonmetallics such as sand, alumina and glass beads or metal shot. The abrasive accelerating system can be high velocity air (sand blasting) of centrifugal force, e.g., produced by feeding shot to the center region of a spinning, vaned wheel.

Problems:

No problems

Case Study:

Moveable and Fixed Jaw Pieces for a Heavy-duty Bench Vise

1. The mechanical properties and size of the piece clearly favor the use of some form of ferrous material, and the size and shape tend to dictate casting. The high elongation can be met by some of the more specialized cast irons, such as ductile cast iron, but also tends to favor the cast steels. Because of the size of the product, some form of expendable-mold sand casting would be likely. While green sand is a possibility the molds will require considerable strength and processes involving stronger molds, such as shell mold will be preferred. Cores will be used to produce the interior channels.

2. Because of the wide variation in section size, the as-cast products would be expected to have high and complex residual stresses and variability of structure and properties. To relax stresses, achieve uniformity, and attain the desired properties, most of the recommended alloys would require some form of heat treatment. Because the properties are not extremely demanding, a furnace anneal may be all that is required. Normalizing may be used if the variability with section size and location can be tolerated. The replaceable jaws would need the higher hardnesses produced by a quench and temper heat treatment process.

3. Corrosion resistance to a shop environment is desirable, and would most likely need to be imparted by paint or other form of surface treatment. If paint is selected, both adhesion and durability (including resistance to various oils and solvents) would be selection conditions. A sand blast treatment may be useful in cleaning the surfaces and producing the roughness necessary for enhanced adhesion.

CHAPTER 15
Multiple-Use Mold Casting Processes

Review Questions

1. The major disadvantage of the expendable-mold casting processes is the requirement that a separate mold be created for each casting. Variations in mold consistency, mold strength, moisture content, pattern removal, and other factors contribute to dimensional and property variation within a production lot.

2. Since the multiple-use molds are generally made from metal, the processes are often restricted to the casting of the lower-melting-point nonferrous metals and alloys. Part size is often limited, and the dies or molds can be rather costly.

3. The reusable molds for permanent mold casting are frequently made from gray cast iron, steel, bronze, or graphite. Aluminum, magnesium, and the copper-based alloys are the metals most frequently cast.

4. Advantages of the permanent-mold casting process include: a reusable mold, good surface finish and dimensional accuracy, the possibility of controlling solidification to give desired properties, and a fast cooling rate to produce a strong structure. Cores can be used to increase the complexity of the castings.

5. Permanent molds, and ancillary equipment, have to be designed to have long lives and so tooling costs for permanent mold casting operations are high. Setup and operating costs are also high. This high process cost cannot be recovered in low part production runs.

6. Permanent mold life depends on part material related characteristics such as melting temperature and melt-mold material compatibility and process related conditions such as pouring temperature and mold temperature.

The primary mold feature that influences mold life is difference in section size through the mold. Different section sizes produce temperature gradients and so differences in mold expansion contraction and also determine the flow patterns as the melt fills the mold.

7. Permanent-mold castings are generally removed from the mold immediately after solidification because the rigid cavity offers great resistance to shrinkage. Tearing might occur if the part is restrained while cooling.

8. Permanent molds are not permeable and usually have smooth mating surface. Venting is usually implemented using slight opening between the mold halves or the addition of small vent holes and passages from the mold cavity to the outside.

9. Slush casting can be used to produce hollow shapes with good surface detail. Wall thickness is variable, so products are largely decorative items, such as candlesticks, lamp bases, and statuary.

10. Low-pressure permanent-mold casting introduces the molten metal into the die by forcing it upward through a vertical tube. The driving force is a low pressure of 5 to 15 psi applied the molten bath.

11. Since no risers are used in the low-pressure permanent-mold process (the pressurized feed tube acts as a riser) and the molten metal in the feed tube can be immediately reused, the yields of the process are generally greater than 85%. The metal is exceptionally clean since it is bottom-fed and never passes through air. Nonturbulent filling further reduces gas porosity and dross, and directional solidification and pressure feeding act to minimize shrinkage problems.

12. Vacuum permanent-mold casting offers all of the advantages of the low-pressure process (clean metal, low turbulence, low dross, compensation for shrinkage, high yields, and good mechanical properties) . In addition, the vacuum produces an even greater cleanliness and low dissolved gas content. Thin-walled castings can be produced with excellent surface quality.

13. In low-pressure permanent-mold casting, the feeding pressures are on the order of 5 to 15 psi. In die casting, the molten metal is forced into the molds by pressures of thousands of pounds per square inch and is held under this pressure during solidification .

14. Most gravity permanent-mold dies are made from gray cast iron. This material has great resistance to thermal fatigue and machines easily. In contrast, die casting dies are generally made from hardened tool steels, since cast iron cannot withstand the casting pressures.

15. Because high pressures might cause turbulence and air entrapment, lower injection pressures may be preferred, followed by higher pressure after the mold has filled completely and the metal has started to solidify.

16. Hot-chamber die-casting machines cannot be used for the higher-melting-point metals, such as brass and bronze, and molten aluminum has a tendency to pick up iron from the casting equipment. Therefore, the hot-chamber machines are generally used with zinc-, tin-, and lead-based alloys.

17. In hot-chamber die-casting machines the molten metal may be in the machine chamber for an extended period. Metals that have high melting temperatures compared to the machine material or react with the machine material are not suitable for hot-chamber die-casting machines. Cold-chamber machine are used to die cast these kinds of materials and examples of such materials are aluminum which picks up iron and magnesium. copper and high-aluminum zinc.

18. Die casting dies fill with metal so fast that there is little time for the air in the mold cavity to escape. To minimize entrapped air problems, such as blow holes, porosity and misruns, the dies must be properly vented, usually by the incorporation of wide, thin vents at the parting line.

19. Since the molten metal is injected into the mold cavity under pressure and this pressure is maintained throughout solidification, risers are not incorporated into the mold design in die casting. Sand cores cannot be used because the pressure of the molten metal would cause them to disintegrate as the metal is injected or produce extensive penetration during the cast. Retractable metal cores can be incorporated into the dies.

20. By introducing the molten zinc directly into the die cavity through a heated manifold and heated nozzles, one can eliminate the sprues, gates and runners normally incorporated into a die-casting die, significantly increasing the yield of the process .

21. Die casting is characterized by extremely smooth surface finishes, excellent dimensional accuracy, and high production rates. A single set of dies can produce many thousand castings without significant changes in dimension.

22. The manufacturing cost of a part includes all the processes needed to produce the part. Typically a series of processes is needed and so if die casting can reduce the number of operations needed and/or simplify the processes, the higher cost of die casting may be offset by lower costs for other, required operations. An example is decreased costs of subsequent finishing (machining to produce specified dimensions and surface finishing to produce desired appearance) for higher cost but more accurate, better surface die cast parts compared to lower cost parts from other types of casting processes that need more or more complicated finishing.

23. In squeeze casting, a precise amount of molten metal is poured into the bottom half of a preheated die set and allowed to partially solidify. An upper die then descends, applying pressure throughout the completion of solidification.

24. A thixotropic material is a semi-solid (liquid plus solid) material that can be handled mechanically like a solid, but shaped at very low pressures because it flows like a liquid when agitated or squeezed. As an alternative to squeeze casting, it eliminates the need to handle molten metal, and reduces or eliminates many of the molten metal problems, such as gas pickup and shrinkage.

25. In semisolid die-casting
- injection temperature is low and so solidification time is short, less substantial machines are needed and machine component life is long,
- the mechanical action breaks up the structure of the semisolid and so a more desirable metallic, isotropic, structure can be produced.

26. In true centrifugal casting, the metal is forced against the outer walls of the mold with

considerable force and solidifies first at the outer surface. Products have a strong, dense exterior surface. Lighter-weight impurities tend to be present on the inner surface, which is frequently removed by a light machining cut.

27. In centrifuging, centrifugal force is used to force metal from a central pouring reservoir into thin, intricate mold cavities removed from the axis of rotation. Thus, the mold cavities fill under the pressure of centrifugal force. In semicentrifugal casting, a single, axisymmetric casting is poured by introducing metal into the centermost region of a rotating mold. The center pouring region is an integral part of the casting .

28. In the electromagnetic casting process there is no interaction with a container, and the electromagnetic stirring promotes a homogeneous, fine-grained structure.

29. Selection of a furnace or melt procedure depends on such factors as: the temperature needed to melt and superheat the metal, the alloy being melted, the desired melt rate and quantity, the desired quality of the metal, the availability and cost of fuels, the variety of metals to be melted, the desire for either batch or continuous melting, the required level of emission control, and the capital and operating costs.

30. Cupolas are used to produce gray, nodular and white cast irons.

31. In cupola-melting operations, temperature and chemistry control is somewhat difficult. The nature of the charged materials and the reactions that occur within the cupola can all affect the product chemistry. Moreover, when the final chemistry is determined by the analysis of the tapped product, there is already a substantial quantity of material within the furnace. Therefore, final chemistry adjustments are often performed in the ladle via ladle metallurgy.

32. In order to increase the melting rate of the metal in a cupola the rate of heating of the incoming air and of the metal have to be increased. Incoming air can be preheated by passing it through a heat exchanger that uses the stack gas as a heat source. Oxygen can be added to blast to increase temperature and increase reaction rate and melting rate. High energy density heat sources can be used, e.g., plasma torches.

33. The stirring action, temperature control, and chemistry control of the indirect fuel-fired furnaces are all rather poor. The major attractive feature is the low capital equipment cost.

34. Arc furnaces offer rapid melting rates, the ability to hold molten metal for any desired period of time to permit alloying (a flux blanket protects the metal), and ease of incorporating pollution control .

35. Channel-type induction furnaces, where the molten metal circulates through a secondary coil loop and gains heat, offer great ability to provide precise temperature control. These make excellent holding furnaces, where the molten metal must be held for long periods of time at a specified temperature.

36. The poring operation has to be designed to insure that the proper pouring temperature is maintained and that only high quality metal gets into the mold. The poring ladle is a critical part of the pouring system.

37. Some of the typical cleaning and finishing operations performed on castings include: removal of cores, gates, risers, fins, and rough spots on the surface, cleaning of the surface, and repairing of any defects.

38. Sand cores are removed by mechanical shaking which may sometimes be preceded by chemically dissolving the binder.

If the runners, risers and gates joining different sections of the part-runner system are small in cross section the part can be broken off of the runner system. If section area is large cutting is necessary using saws, abrasive wheels or oxyacetylene or plasma torches.

39. Some types of casting defects can be repaired readily by arc welding In addition, surface porosity can be filled with a resinous material, such as polyester, by a process known as impregnation.

40. In metal-casting operations, robots can be used to tend stationary, cyclic equipment, such as die-casting machines. They can be used in finishing rooms to remove sprues, gates and runners, perform grinding and blasting operations, and assist in the heat treatment of castings. They can dry molds, coat cores, vent molds, and clean and lubricate dies. In certain processes, they can be used to dip patterns into mold material slurries and position them to dry. Further implementation might include their use to position the pattern, fill the flask with sand, pour the molten metal, and manipulate a cutting torch to remove the sprue.

41. Some of the features affecting the cost of a cast product include: the direct cost ~t material and the energy to melt it, and the indirect cost of patterns, molds, dies, melting and pouring equipment, scrap metal, cleaning, inspection and labor. While the direct costs do not change with the number of castings being produced, the indirect costs must be shared over the production lot. An expensive die may not be justifiable for a small number of castings.

Problems:

No problems

Case Study:

Baseplate for a Household Steam Iron

1. The baseplate must heat to elevated temperatures quickly and cool to room temperature quickly after use. It must sustain repeated thermal cycles without deterioration, be light enough to facilitate ease of use but heavy enough to press out wrinkles without requiring a pushing force, and provide scratch resistance to buttons, snaps, rivets and zippers. The material must be corrosion resistant to steam (and all of the associated contaminants of various waters), as well as a variety of laundry products. It must be fracture resistant to dropping from waist height. The heating element must be thermally-coupled, but electrically-insulated (NOTE: Normally, thermal conductivity and electrical conductivity are proportional properties for metals!). While the key properties are thermal conductivity, corrosion resistance, and light weight, strength, wear resistance, toughness, and resistance to creep and thermal fatigue must all be present at moserate levels. An attractive appearance may be desired for marketability, and machinability may be required to produce the necessary holes, threaded recesses, and dimensional precision .

2. While aluminum would be the primary material to be considered, some possible alternatives might be: Stainless steel (heavy and poorer thermal conductivity), copper alloys (heavier than steel), and cast iron (heavy). Aluminum alloys offer the desired low density, low cost, high thermal conductivity, good corrosion resistance, machinability, and appearance.

Jumping ahead to marry material and process, the most attractive process appears to be die casting, and the family of aluminum die casting alloys is relatively small. Alloy 380 presently accounts for the overwhelming majority of such castings (probably more than 80%). While other alloys may offer better thermal conductivity, the enhancement may not be sufficient to justify deviation from a material that has become the industry norm.

3 . Because of the integral heating element, production would most likely be by some form of casting with a "cast-in insert". Alternative methods include: sand, shell mold, full mold, permanent mold, plaster mold, investment and die casting, as well as various methods of forging or powder metallurgy, for which the insert would have to be a secondary addition.

Within the realm of reasonable production capability, none of the processes could produce the completed part to net-shape directly. Die casting appears to come closest, being capable of producing the narrow webs and 1/8 inch diameter recesses, but is not capable of producing the 1/16 inch holes for the steam vents by means of coring. Surface finish and dimensional precision are excellent for this application.

4. The 1/16 inch holes would most likely be added by some form of secondary machining operation, such as drilling. In addition, the larger holes are threaded, but the simplest means of core removal is simple retraction. Therefore, it is likely that these would be made as smooth-bore cavities in the casting, sufficiently undersized to permit the machining of the threads as a secondary operation.

5. The simple buff and polish may well be the best possible finish. The long-term durability of the teflon coating is questionable, and the anodized layer would produce a

darker dull gray finish on the silicon-containing casting alloy. In addition, this layer has been known to flake off due to the differential thermal expansion characteristics and the brittle nature of the oxide material.

CHAPTER 16
Powder Metallurgy

Review Questions

1. Powder metallurgy processes involve blending of powders, pressing of the powders to a desired shape and sintering.
Since powders are used, the composition of the part can be varied over a wide range and so a wide range of part properties can be produced.
By using a powder component that can be removed after the part is formed permeable parts can be made.
Since powders are compacted in relatively high precision tooling, accurate parts can be produced.
Compaction may require high pressure and in such a case compaction forces will be large and parts will be small.
Sintering enables part characteristics to be controlled by controlling the sintering process.

In general, small, high precision parts that need to have carefully controlled microstructure are candidates for production using powder metallurgy techniques.

2. Some of the earliest mass-produced powder metallurgy products included coins and medallions, platinum ingots, and tungsten wires. These were followed by carbide cutting tool tips, nonferrous bushings, self-lubricating bearings, and metallic filters.

3. Automotive applications currently account for nearly 75% of P/M production. Other major markets include: household appliances, recreational equipment, hand tools, hardware items, business machines, industrial motors, and hydraulics.

4. Iron and low alloy steels are used in about 85% of powder metallurgy production. The large amount of this metal family previously (and currently) used and the workability and experience with working it led to the early and continued development of powder metallurgy processes using it.

5. The powder metallurgy process normally consists of four steps: powder manufacture, mixing or blending, compacting, and sintering .

6. Some important properties and characteristics of metal powders are: chemistry and purity, particle size, size distribution, particle shape, and the surface texture of the particles .

7. The most common means of producing metal powders is by melt atomization where molten metal is fragmented into small droplets and the droplets solidify into particles of metal. Any material that can be melted can be atomized and the resulting particles retain the chemistry of the parent material.

8. Other techniques of powder manufacture include chemical reduction of particulate compounds, electrolytic deposition from solutions or fused salts, pulverization or grinding of brittle materials (comminution), thermal decomposition of hydrides or carbonyls, precipitation from solution, and condensation of metal vapors .

9. Powder production processes based on processes in which elemental forms of material are produced and exist will be practically useful (not overly complicated, time consuming, energy intensive, easily controllable) only for producing elemental powder. For example, as chemical reduction, thermal decomposition and condensation processes occur different elements are obtained at different stages (time, temperature or composition) and so elemental powders are the logical product to be produced using such processes.

10. The production of amorphous and rapidly solidified powders requires large energy density (energy per unit volume of material produced) and so with reasonable energy levels only small particles can be produced. That is, for fixed energy input the requirement of high energy density means that only small volume products can be produced. To make useful products these small particle, powder, raw materials have to be combined and powder metallurgy techniques accomplish this consolidation task effectively and efficiently.

11. To make a powder metal product powder in placed in a die, pressed and then sintered. To describe the ability of the powder to flow into the die and into various, small, sections of the die cavity and to be uniformly distributed in the die, quantitative measures of powder flow are useful. Flow rate tests provide such a powder behavior measure in flow rate.

12. Apparent density is the density of the loose powder to which there has been no application of external pressure. Final density is measured after compaction and sintering and is typically about twice the value of the apparent density.

13. Green strength refers to the strength of the powder metallurgy material after pressing, but before sintering. Good green strength is required to maintain smooth surfaces, sharp corners, and intricate details during ejection from the compacting die or tooling and subsequent transfer to the sintering operation .

14. Mixing or blending is performed to combine various grades or sizes of powders or powders of different compositions, or add lubricants or binders to the powder.

15. The addition of a lubricant improves the flow characteristics and compressibility of the powder at the expense of reduced green strength.

16. While lubricants such as wax or stearates can be removed by vaporization, the graphite remains to become an integral part of the final product. In the production of steel products, the amount of graphite lubricant is controlled so it will produce the desired

carbon content in the final material when it is dissolved in the iron powder.

17. Composites of compatible (easily bonded in sintering) materials should be easy to produce by powder metallurgy techniques.

Since there is a large amount of mechanical working of the powders used in powder metallurgy processes, and since surface areas are high energy regions on material bodies, and since powder surface area is large, the opportunity for producing composites of usually incompatible materials exists. That is the combination of mechanical working and high surface energy may make powder sintering possible and an effective way to create composite materials. Examples are composites composed of an immiscible material dispersed in a matrix and combinations of metals and nonmetals.

18. The goal of the compacting operation is to compress and densify the loose powder into a desired shape. Uniform high density is desired and the product should possess adequate green strength .

19. Compacting pressures generally range between 3 and 120 tons per square inch, with values between 10 and 30 being most common. The total pressing capacity of compacting presses is the feature that generally restricts the cross-sectional area of P/M parts to several square inches.

20. During compaction, the powder particles move primarily in the direction of the applied force. The powder does not flow like a liquid, but simply moves in the direction of pressing until an equal and opposing force is generated through either friction between the particles and die surfaces or by resistance from the bottom punch.

21. When pressing with rigid punches, the maximum density occurs adjacent to the punch and diminishes as one moves away. With increased thickness, it is almost impossible to produce uniform, high density throughout the compact. By using two opposing punches, a more-uniform density can be obtained in thicker pieces.

22.The final density of a P/M product can be reported as either an absolute density in units of weight per volume, or as a percentage of the theoretical density, where the difference between this number and 100% is the amount of void space still present in the product.

23. Conventional powder metallurgy products fall into the classes of
1. Porous or permeable products that are design and produced to small pores or voids that can be filled with another material or to function as porous media as do filters.
2. Complex shaped parts with dimensional and geometric tolerance and surface finish requirements that require only light finishing when produced by powder metallurgy. Such parts can be produced in powder metallurgy dies and so avoid complex machining operations.

3. Product made from high melting point or difficult to machine materials. The mechanical action in compaction and high surface energy of powders make consolidation by sintering practical and avoids difficult machining tasks.
4. Products made from composite materials. Composites can be made from compatible, easily sintered materials and even from some incompatible materials (Question 17).

The use of the concepts of better properties and economic advantage (items 5 and 6 in the text) are useful for describing the advantages of the powder metallurgy processes, but not for describing types of products.

24. Isostatic compaction is the process in which the powder is exposed to uniform compacting pressure on all surfaces, and is usually achieved by encapsulating the powder in a flexible mold and immersing it in a pressurized gas or liquid. The process is generally employed on complex shapes that would be difficult to compact by the faster, more traditional techniques.

25. Warm, elevated temperature, compaction produces more uniform compaction and improved as-compacted and after processing properties, primarily strength. As temperature is increased powder strength decreases. During warm compaction increased deformation of the powder and increased mechanical action makes for more uniform density and increased bonding due to disruption of surface layers on the powder particles. The increased, more intimate contact between powder particles also increases the material consolidation effects of sintering.

26. To increase the powder flow capability, very small particles are used in the powder used in metal injection molding compared to the particle size of powders in conventional powder metallurgy processes.

27. Depending on the binder used, it is removed by
- solvent extraction,
- heating to above the binder volatilization temperature,
- catalytic chemical binder decomposition.

28. During sintering, P/M injection molded parts shrink between
15 and 25% as they achieve their final density and properties.

29. Since small particle size powders are expensive as is binder removal, the ideal geometry for a metal injection molded part is
- a part in which mechanical performance (strength and deformation behavior) is obtained by efficient design rather that by use of a large amount of material, e.g., the ability to get the same performance with less material in an I-beam than with a rectangular cross section beam. Powder cost implies small, complex parts.
- a thin part. Binder removal will be faster and more effective if the binder-surface distance is small. Binder removal implies small, thin parts.

30. P/M injection molding enables the P/M production of small, complex components

that were previously investment cast or machined directly from metal stock. Parts can be made with thin walls and delicate cross sections that would be impossible to compact in a conventional press.

31. The three stages of sintering are: (1) the burn-off or purge -- designed to remove air, volatilize and remove lubricants and binders, and slowly raise the temperature of the compacts; (2) the high-temperature sintering stage, with the temperature being constant; and (3) the controlled cool-down.

32. Most metals are sintered at temperatures between 70 and 80% of their melting point. Certain refractory metals may require temperatures as high as 90% of the melting point.

33. When sintering, one must slowly raise the temperature of the compacts in a controlled manner because rapid heating would produce high internal pressure from heating air entrapped in closed pores and volatilizing lubricants. This would result in swelling or fracture of the compacts.

34. Controlled, protective atmospheres are necessary during sintering because the fine powder particles have large exposed surface areas and, at elevated temperatures, rapid oxidation will occur and impair the properties of the product.

35. During sintering, metallurgical bonds form between the particles. In addition, alloys may form, product dimensions will contract, and density will increase.

36. The purpose of sinter brazing is to join two or more powder metal parts. The brazing process is carried out during the sintering of the individual parts.

37. Products of HIP techniques generally possess full density with uniform, isotropic properties that are often superior to those of products produced by alternative techniques. Near-net shape production is possible, and reactive materials can be processed since they are isolated from the environment.

38. The primary limitations of the HIP process are the cost of "canning" and "decanning" the material, and the long time required for the processing cycle. The sinter-HIP process permits the production of full-density products without the expense and delay of canning and decanning.

39. Sinter-HIP and pressure assisted sintering are intended to produce the same desirable part characteristics as hot isostatic pressing. The main advantage of sinter-HIP and pressure assisted sintering is that the canning and decanning operations in HIP are eliminated.

40. Alternative techniques for the production of high-density P/M products include the various high-temperature forming methods, the Ceracon process, and spray forming (also called the Osprey process).

41. In spray forming
- a stream of molten droplets is produced,
- the droplet stream is sprayed into a collecting container,
- the temperature of the initial material and droplet velocity and flow rate are controlled so that the droplets are in a semisolid or slushy state when they interact with each other in the container,
- the collection of droplets freezes into the part of a structural shape depending on the shape of the collecting container.

High density, fine grain size parts can be made since the interacting droplets are small and can deform extensively in the process since they are in the semisolid state.

42. Repressing, coining or sizing operations are generally used to restore dimensional precision. Only a small amount of metal flow takes place.

43. Repressing cannot be performed with the same tooling that was used for compaction because the compaction tooling is designed to produce an over-sized compact to compensate for the dimensional shrinkage that occurs during the sintering operation.

44. During repressing, only a small amount of metal flow takes place, and the part retains its starting shape. PIM forging, however, imparts a considerable amount of plastic deformation as the material flows from a simple starting shape to a more-complex shape forging.

45. While impregnation and infiltration are both processes that fill the permeable void space with another material, infiltration refers to the filling of the voids with another metal, while impregnation employs a liquid, plastic, or resin.

46. Powder metallurgy product density is directly related to the number and size of the pores in the product. The voids or pores can effect the performance of secondary or finishing operations. The effects are due to the voids in the part and the surface area of the pores.

In heat treatment the part environment during heating and quenching can enter the voids in the part, at least the pores near the surface. Any undesirable reactions between the environment and the part will occur on the part surface and internal to the part in the pores. Protective or nonreacting heating atmospheres may be required. Quenching medium entering the part leads to more extreme temperature gradients in powder metallurgy parts than in solid parts of the same size and shape. Material-quench medium chemical reactions occur not only on the surface but also over the wetted surfaces of the pores. Certain liquid quenching mediums may not be useable.

Both mechanical and fluid-part interactions occur in machining. The density of powder metallurgy parts can indicate potential concerns when machining these parts. When the cutting tool passes through the powder metal workpiece and encounter voids the mechanical loading in the tool edge-work material interaction region changes. Cutting forces become intermittent. The deformation imposed on the work material changes since the tool passes from solid material – to a void – to solid material. The changing cutting forces and deformation patterns lead to a less controlled machining process and potentially a rough, damaged machined surface and increased tool wear. Sharp tools and light cuts can help minimize undesirable mechanical effects in machining. Cutting fluids can enter the pores in the powder metal part and produce undesirable temperature gradients and deleterious fluid-work material chemical reactions.

Surface treatments can involve mechanical, thermal and chemical effects depending on the treatment, e.g., shot peening to produce compressive residual stress, heat-and-quench treatments, carburizing. Powder metal part density, volume of pores, can indicate potential problems with deformation and fracture in mechanical processes and surface-environment problems in thermal and chemical processes as discussed above.

47. The fracture-related properties, such as toughness, ductility, and fatigue life show the strongest dependence on product density.

48. When converting the manufacture of a component from die casting to powder metallurgy, it is important to realize that P/M is a special manufacturing process and provision should be made for a number of unique factors. Products that are converted from other manufacturing processes without modification in design rarely perform as well as parts designed specifically for manufacture by powder metallurgy.

49. The ideal powder metallurgy product has a uniform cross-section, and a single thickness that is small compared to the cross-sectional width or diameter.

50. Powder metal parts provide opportunities for improved part performance since in may be possible to add performance improving additives into the pores in the part. Even with no added material the pores in powder metal parts can be used. By controlling pore size the flow of gases, liquids and particles through the part can be controlled. Examples of products that use part porosity or permeability to advantage are oil impregnated powder metal bearings, powder metal filters and flow regulators.

51. In the electrical industry, copper and graphite are frequently combined to provide both conductivity and lubrication. Electrical contacts frequently combine copper or silver with tungsten, nickel or molybdenum, where the material with high melting temperature provides resistance to fusion during the conditions of arcing and subsequent closure.

52. Machining has two general goals, to produce desired shapes and dimensions and to produce specified surface finish. Finish machining usually is concerned with producing tight tolerance dimensions and low rough ness surfaces. To accomplish these goals high accuracy, rigid, dynamically stable machine tools are required and usually mild cutting conditions are used with resulting low rate of material removal and long machining time. Expensive machine tools and tooling and low material removal rates lead to high cost finish machining operations.

53. In casting materials that are immiscible, that do not form solutions or are outside solubility limits will not form useful continuous solid materials on solidification. While these types of materials cannot be cast, often they can be combined by the mechanical and thermal processes in powder metallurgy processes. An extreme case example is the production of metal-ceramic composites such as aluminum-alumina.

In many forming processes complex shapes are produced and so large deformations are required to form the parts. If the required deformation exceeds the maximum deformation possible before fracture the part cannot be formed or can only be formed in complex, costly processes such as forming-annealing-forming. With the same material in powder form, compacting and sintering can be used to produce the desired shape without the limits imposed by maximum possible deformation. After sintering final sizing by a deformation process to relatively high deformation levels can often be achieved. The residual porosity after sintering effectively increases material ductility as pores are closed in mechanical sizing operations. The conclusion is that powder metallurgy processes may be useful for forming brittle metals such as uranium and zirconium.

Also, composite parts can be made using powder metallurgy processes, Question 17.

54. Because of the high pressures and severe abrasion involved in the compacting process, the dies must be made of expensive materials and be relatively massive. The set-up and alignment of punches and dies is frequently a time-consuming process. Production volumes of less than 10,000 identical parts are rarely practical .

55. The higher cost of the starting material for powder metallurgy is often offset by the absence of scrap formation and the elimination (or reduction) of costly machining operations. Moreover, P/M is usually employed for the production of small parts where the material cost per part is not very great.

56. When compared to cast or wrought products of the same material, conventional P/M products generally possess inferior mechanical properties. This may be an unfair comparison, for if the P/M material and processing is designed to produce a desired product, the desired mechanical properties can often be obtained at lower cost than by alternative techniques. The material, however, is frequently different from that used in wrought or cast equivalents. If full density can be achieved, the properties of PiM products are often superior to their wrought or cast counterparts.

Problems:

1. In addition to chemical purity, the key properties or characteristics for material being used in powder metallurgy are those that affect how the powder will, flow, fill space, compact (i.e. respond to pressure), and sinter, as well as those that will directly affect the final properties. These include:
surface chemistry, particle size and size distribution, particle shape (and shape distribution), surface texture, and microstructure (or mechanical properties) . Since the

material is processed as a solid, all of the geometric and property features of the solid become important.

The characterization of starting material for a powder metallurgy process is far more extensive than specifying the starting material for casting (where the material will be melted and both the geometry and the properties will be significantly altered by the process), and forming (where the properties are important, but the starting geometry will be highly altered) .

2. The hot pressing process would not be attractive for the manufacture of conventional P/M parts because loose powder must be protected from oxidation when it is at the elevated temperature. Conventional P/M permits compaction in air because the powder is at room temperature, and reaction rates are acceptably slow. Protective atmospheres are provided during elevated temperature sintering. In hot pressing, some form of "canning" or isolation must be provided and this brings about additional expense and decreased rate of production.

Case Study:

Impeller for an Automobile Water Pump

1. The relatively low mechanical property, ductility, hardness and wear resistance requirements make this part a candidate for a variety of materials. Because of the presence of coolant and a additional materials in the shaft and housing of the pump, material selection should take into account galvanic corrosion. Possible materials include aluminum, cast iron, copper alloys, stainless steel and others.

2. As designed, the part is a two level part with flat surfaces. With the relatively low surface area and small thicknesses the part can be manufactured by conventional press-and-sinter powder metallurgy using a double acting press. Alternative means of manufacture are some form of casting, such as die casting, permanent mold, shell or investment casting. It would be difficult to use forming processes to form the part because of the lack of draft on the impeller blades. With design changes forging could be used.

3. Possible manufacturing processes are listed in part 2. Each is more compatible with the use of some materials rather than others.

4. Since the part will constantly exposed to water over a range of temperature, the compatibility of polymers with this environment is a major concern. Many polymers absorb water and swell. The change in part dimension in use is unacceptable. This limits the material choice to high performance, engineered polymers which are probably not practical for such a mass produced, low cost part.

CHAPTER 17
Fundamentals of Metal Forming

Review Questions

1. Plasticity is the ability of a solid to flow, plastically deform, without deterioration of its properties. The mathematical description of plastic deformation stresses and strains, and the relations between them is known as the theory of plasticity.

2. Deformation processes shape metal in the solid state through the rearrangement rather than the removal of material. Unfortunately, large forces are required, and the machinery and tooling can be quite expensive. Large quantities may be necessary to justify the capital expenditure.

3. Large production quantities are often necessary to justify the use of metal deformation processes because the large forces require costly machinery and tooling.

4. Independent variables are those aspects of a process over which the engineer has direct control. They are generally selected or specified when setting up the process.

5. The specification of tool and die geometry is an area of major significance in process design. Since the tooling will produce and control the metal flow, the very success or failure of a process often depends upon good tool geometry.

6. It is not uncommon for friction to account for more than
50% of the power supplied to a deformation process. Product quality is often related to friction, and changes in lubrication can alter the material flow and resulting material properties. Production rates, tool design, tool wear, and process optimization all depend upon friction and lubrication. In addition, lubricants often act as coolants, thermal barriers, corrosion inhibitors, and parting compounds .

7. Lubricants, and metal working lubricants in particular, can act as coolants, thermal barriers and corrosion inhibitors. Often lubricants are formulated to include or enhance these functions in addition to their use in reducing friction.

8. If the speed of a metal forming operation is altered, several changes can occur. Many materials are speed-sensitive and will behave differently at different speeds. Ductility may vary, and many materials appear stronger when deformed at faster speeds. In addition, faster speeds promote lubrication efficiency and reduce the amount of time for heat transfer and cooling.

9. Dependent variables are aspects of a process determined by the process itself as a consequence of the values selected for the independent variables.

10. It is important to be able to predict the forces or powers required to perform a specific forming process, for only by having this knowledge can the engineer specify or select the equipment for the process, select appropriate tool or die materials, compare various die designs or deformation methods, and ultimately optimize the process.

11. The engineering properties of a product can be altered by both the mechanical and thermal history of the material. Therefore, it is important to know and control the temperature of the material throughout the process.

12. Metal-forming processes are complex systems composed of the material being deformed, the tooling performing the deformation, lubrication at surfaces and interfaces, and various other process parameters. The number of different forming processes is quite large, and various materials often behave differently in the same process. The independent variables interact with one another, so the effects of any change are often quite complex.

13. The predictive link between independent and dependent variables is generally based on one of three approaches:
experience, experiment, or process modeling.

14. To be truly valid, direct experiments should be full-size at production speeds. Reduced magnitude testing generally alters lubricant performance and thermal effects. Results should be extrapolated to production conditions with caution. In addition, experimentation is costly and time-consuming.

15. Process modeling, particularly numerical modeling and simulation, has experienced greatly expanded use because
- of the availability of computers with continually increasing computational power,
- the accuracy of simulations.

In addition, there are many useful results that can be obtained through use of process models and some of these are listed in the answer to Question 17. below.
- of the use of quantitative results to provide understanding of details of deformation processes,
- obtaining quantitative results that correspond to reality demonstrates process understanding,
-of reductions in production delays and lead times due to having accurate predictions of process performance and part characteristics at the process design stage of manufacturing,
- they can be used as laboratory tools to run numerical experiments to
--- simulate processes using varying processing conditions and tooling to answer “what if?” questions,
--- investigate feasibility of modifications to processes and products and evaluate new processes and products.

16. The accuracy of the various process models can be no better than that of the input

variables, especially those like strength of material and interfacial friction.

17. In general, process models are used to predict process behavior and resulting product properties. Process behaviors such as forces and power required to produce a given deformation pattern and product characteristics such as deformation in surface regions and the resulting residual stress state can be calculated – is accurate process models are available.

In addition, and expanding on the thoughts underlying Question 15:
Process modeling, particularly numerical modeling and simulation, has experienced greatly expanded use because
- of the availability of computers with continually increasing computational power,
- the accuracy of simulations.
- of the use of quantitative results to provide understanding of details of deformation processes,
- obtaining quantitative results that correspond to reality demonstrates process understanding,
-of reductions in production delays and lead times due to having accurate predictions of process performance and part characteristics at the process design stage of manufacturing,
- they can be used as laboratory tools to run numerical experiments to
--- simulate processes using varying processing conditions and tooling to answer “what if?” questions,
--- investigate feasibility of modifications to processes and products and evaluate new processes and products.

18. A constitutive equation for an engineering material is an attempt to mathematically characterize the material's behavior under various conditions of temperature, strain, strain rate, and pressure .

19. Many of the process models describe friction by a single variable of constant magnitude -- i.e. friction is the same at all locations and throughout the entire time of the process.

20. It is important that the metal-forming engineer know the strength or resistance to deformation of the material at the relevant conditions of temperature, speed of deformation, and amount of prior straining. In addition, he would benefit from information on the formability and fracture characteristics, the effect of temperature and variations in temperature, strain hardening characteristics, recrystallization kinetics, and reactivity with various environments and lubricants.

21. Typically interface forces and temperatures are high in metalworking processes. This situation leads to high friction forces. So, friction is important in metalworking processes since high friction forces result in high overall forces (friction and deformation forces) and high energy dissipation. Large forces cause machine and tooling deformation and so the need for large, rigid, expensive forming machines. High energy dissipation rates

cause high temperatures and so increased tool wear and possibly deleterious effects on the workpiece/final part.

22. The friction encountered during metalforming operations is significantly different from that observed in most mechanical operations. In forming, a hard, nondeforming tool interacts with a soft, plastic, workpiece at relatively high pressure. Only a single pass is involved, and the workpiece is often at elevated temperature. Mechanical operations usually involve materials of similar strength, under elastic loading, with a wear-in cycle, and at relatively low temperatures.

23. Two important phenomena in determining resistance to motion of one surface over another, friction force, are
- the plowing of asperities on the harder surface through the softer surface,
- the breaking of bonds between the two surfaces. The bonds form when surfaces are brought into contact since local stresses can be very high and asperity-asperity bonding occurs.

24. Since the workpiece passes over the tooling only once, wear on the workpiece is generally not objectionable, and may actually be desirable as it produces a shiny, fresh-metal surface. Wear on the tooling, however, alters the dimensions and surface finish of the product and increases the power losses due to friction. Replacement of costly tooling may be required along with lost production during the changeover.

25. Lubricants should be selected for their ability to reduce friction and suppress tool wear. Other considerations include:
ability to act as a thermal barrier, coolant, or corrosion retardant; ease of application and removal; lack of toxicity, odor and flammability; reactivity; thermal stability; stability over a wide range of processing conditions; cost; availability, surface wetting; and the ability to flow or thin and still function .

26. If one can achieve full-fluid separation between a tool and workpiece, the required deformation forces may reduce by 30 to 40% and tool wear becomes almost nonexistent.

27. In general, an increase in temperature brings about a decrease in material strength, an increase in ductility, and a decrease in the rate of strain hardening - all effects that would tend to promote ease of deformation.

28. The temperatures required for hot working generally exceed 0.6 times the melting point of the material on an absolute temperature scale. Cold working generally requires temperatures below 0.3 times the melting point, and warm working is the transition region, between 0.3 and 0.6 times the melting point.

29. Hot working is deformation under conditions of temperature and strain rate such that recrystallization occurs simultaneously with the deformation.

30. Hot forming operations do not produce strain hardening and the companion loss of

ductility, permitting the material to be deformed by extensive amounts without the likelihood of fracture or the use of excessive force (elevated temperature lowers the strength and deformation does not increase it) . In addition, diffusion is promoted, pores can be reduced or welded shut, and the metallurgical structure can be altered to improve properties.

31. Disadvantages associated with hot working involve the reactions which may be promoted by elevated temperature, such as rapid oxidation. Tolerances are poorer and the metallurgical structure will be nonuniform if the amount of deformation or thermal history varies throughout the product.

32. If a metal is deformed sufficiently at temperatures above the recrystallization temperature, the distorted structure (of deformation) is rapidly replaced by new, strain-free grains. The final structure of the metal is that produced by the last recrystallization and the any subsequent thermal history. The production of a fine, randomly-oriented, spherical-shaped grain structure can improve not only the material strength, but also the ductility and toughness.

33. While the metal grains recrystallize during hot forming, inclusions and nonmetallic impurities do not and serve to impart an oriented or fiber structure (directional properties) to the product .

34. Heated dies are often used in hot forming operations to reduce the amount of heat loss from the workpiece surface to the tooling and maintain the workpiece temperature as uniform as possible. Nonuniform temperatures may produce surface cracking or nonuniform flow behavior and undesirable properties.

35. When dies or tooling is heated, the lifetime tends to decrease. Therefore, the upper limit to tooling temperature is generally set by some minimum desired lifetime.

36. Compared to hot working, cold working requires no heating, produces a better surface finish, and offers superior dimensional control, better reproducibility, improved strength, directional properties, and reduced contamination problems.

37. Some disadvantages of cold working include: higher forces, required use of heavier and more powerful equipment, less ductility, required surface cleanliness, and the possible need for recrystallization anneals . Detrimental directional properties and undesirable residual stresses may also be produced .

38. Cold working can replace the forming and some strengthening process sequence of operations with only a forming operation - if the required part strength level can be achieved by the strain hardening that occurs during cold working.

39. Key tensile test properties that can be used to assess the suitability of a metal for cold forming include: the magnitude of the yield-point stress, the rate of strain hardening, and the amount of ductility that is available.

40. Springback is an important phenomenon in cold working because the deformation must be carried beyond the desired point by an amount equal to the subsequent springback. Moreover, the amount of springback tends to differ from material to material.

41. Luders bands or stretcher strains are the ridges and valleys that can form on the surface of sheet metal that has undergone a limited amount of stretching. If the total stretch is less than the yield-point runout, some segments of the metal will undergo deformation and thin by an amount consistent with the entire yield-point runout while other regions resist deformation and remain at the original thickness. Both responses can occur since both require the same applied stress.

42. Cold working produces large changes in metal structure and changes the material properties that depend on microstructure. Compared to the same material in the not-cold-worked state, cold worked material will fracture at a lower strain, i.e., ductility decreases, Figure 17-8. The disruption of metallic structure will also make electron transport through the material more difficult and so electrical conductivity will decrease. The increasing number of smaller grains with cold working means that more grain boundaries are formed. Grain boundaries are high energy areas and so will be more sensitive to corrosion and material corrosion resistance decreases and stress corrosion cracking susceptibility increases.

Depending on the processing state and use of the material, increasing strength due to cold working may be a beneficial or deleterious effect. In continuing processing the increased strength means high processing forces and so increasing strength is a decline in material property. An aspect of this is considered in Question 43. If increased strength is beneficial to the product, cold working induced increase in strength is an improvement in properties.

43. In cold working work material strength increases and ductility decreases. Both of these effects can be changed in annealing processes. Intermediate anneals in a series of cold working operations can be used to undo the strain hardening/cold working effects of previous operations and so increase ductility and decrease processing forces in a subsequent operation. The final intermediate anneal (an anneal followed by one or more cold working operations rather than a final anneal after all cold working), combined with the final cold working process, can be used to control the strength and ductility of the final product. The final anneal will increase material ductility and decrease strength while a subsequent cold working process will decrease ductility and increase strength. Design of this final combination of processes being cognizant of the tradeoff allows production of a final part with desired strength and ductility.

44. Compared to hot forming, warm forming offers reduced energy consumption, less scaling and decarburization, better dimensional control, improved surface finish, less scrap, and longer tool life. Compared to cold forming, it offers reduced forces on tooling and equipment, improved material ductility, and a possible reduction in the number of

intermediate anneals.

45. The slow development of warm working processes is due to the lack of knowledge about material behavior in the warm working range and the limited enabling technology developed for use in this working temperature range. Cold and hot working processes have a long history and so the material knowledge bases for low and high temperatures are extensive and materials, machine tools, tooling and lubricants for use in them are well developed. The recent advent of warm working means that material property data for the relevant temperature range is scanty and very effective tooling, lubricants, etc., still need to be developed.

46. The work material characteristic that is the driving force for isothermal forming is a large dependence of material strength on temperature. For materials that are typically hot worked and whose strength increases rapidly with decreasing temperature a decrease in working temperature during processing will produce a large increase in strength and in the associated loads in the process. Such materials are candidates for isothermal forming.

47. Isothermal forming is more expensive than conventional forming since increased forming temperature has to be produced and the temperature and effects of increased temperature on the work and tooling materials have to be controlled. For example,
- work and dies have to be heated which is an increased cost over cold working,
- the increased tooling temperature will cause decreases in tool life,
- the energy dissipated in material deformation is almost all dissipated as heat. So, during forming the work temperature increases and large temperature changes defeat the purpose of isothermal forming. The simplest way to control this deformation work induced temperature rise is to decrease the deformation rate. This leads to lower production rates and increased costs.
- long time exposure of the work and tool materials to elevated temperatures may cause severe enough effects such as scale formation, decrease in strength and corrosion to warrant protecting the forming operation from the environment. Any controlled shielding such as by use of an inert gas will raise the initial cost the manufacturing machine and the operating cost since process complexity in increased.

Problems:

1. The problem deals with the amount of cold work and its effect on material strength and ductility as shown in Figure 17-8. A quantitative measure of "amount of cold work" is needed and one is provided in Chapter 2 in

percent reduction in area R.A. = $\{ (A_o - A_f) / A_o \}$ 100%

This is also a logical measure of deformation imposed in drawing, and is the one used.

The problem setting is

- there is a specified amount of deformation necessary,

  R.A. = $\{ (A_o - A_f) / A_o \}$ 100% = $\{ (0.110 - 0.008) / 0.110 \}$ 100%,

  R. A. = 93%,

- the required final yield strength of at least 50,000 psi means that the material must be subjected to a net amount of cold working of at least 27% - Figure 17-8,
- the required final product ductility of at least 10% elongation implies that the final drawing process in a sequence of draws should impose no more than about 31% cold work – Figure 17-8,

A solution is

- the final drawing process should impose cold work of about 30% on the work material that is in a state approximating its initial undeformed condition,
- assuming that an annealing process can bring the work material back to its initial condition, there should be an anneal before the last draw and the last draw is one imposing a 30% R.A.,
- the entire drawing sequence has to impose an amount of cold work = R.A. of 93%,
- so before the final anneal the previous drawing process(es) have to have produced a 63% amount of cold work,
- the question is then, can this previous 63% R.A. be accomplished in one drawing pass?
  - if so then a possible solution is
    draw to 63% R.A. then anneal then draw to 30% R.A.

I - if not, there is a limit on the amount of reduction that can be imposed in a single draw and a solution is

draw to a reduction less than maximum possible reduction, anneal, draw, anneal, draw etc with the individual draw reductions set to make the total reduction 93% and last draw reduction 30%

The maximum reduction possible in a wire drawing process is not discussed in the text. Quantitative models for maximum possible reduction exist. The general concept is that the drawing force acting on the wire should not result in a drawing stress that is larger than the yield strength of the wire leaving the die. Both the drawing stress and the wire yield strength depend on the amount of reduction, along with other factors such as die-work friction. Setting expressions for drawing stress and yield strength equal to each other gives the maximum reduction condition.

2. a) . Additional costs would include the cost of a heating furnace and the energy costs to achieve the warm working temperature. Tool life would be affected by the combination of increased temperature (decreasing lifetime) and the reduced loads associated with thermal softening (increasing lifetime) . Experience would determine which of the above effects would dominate. The reduction in strain hardening could reduce or eliminate the need for intermediate anneals, but consideration should be given toward attaining the desired final properties. Expanded capabilities in terms of size, complexity, and range of possible materials may expand possible markets.

b) . The conversion from hot forming to warm forming would be accompanied by an obvious savings in energy (heating the workpiece to a lower temperature and heating less material due to higher precision) . Additional energy might be saved if it is possible to achieve the desired final properties without requiring a final heat treatment (there is some strain hardening with warm working) . Improved dimensional precision and surface finish (reduced scaling and decarburization) can mean savings through a reduction in finish machining and the amount of material converted into scrap. Tool life is increased because of the reduced temperatures and the reduction of thermal shock and thermal fatigue. The forces required for forming will increase by 25 to 60%, 50 machinery must be more powerful, or the size of products produced on a given machine must be reduced.

3. Machining operations simply cut through the existing structure, removing the unwanted portion of material. The dimensions of the starting material must be sufficient to contain the crests of the threads. Thread rolling, on the other hand, forms the threads by displacing material from the root of the threads up into the crests. The starting diameter is between that of the root and crest. The benefits of material conservation and oriented flow continue as discussed in the text, but by cold forming the threads, the effects of strain hardening must also be considered. The deformed material will become stronger, but less ductile. The strengthening can be a significant asset, as long as the accompanying loss of ductility does not make the material too brittle. The residual stress pattern imparted by the deformation can be another concern as it can affect fatigue performance and contribute to failure by stress-corrosion cracking. In addition, it should be noted that the increased strength can be lost if the surface is exposed to elevated temperatures during operations such as hot-dip galvanizing.

Case Study:

Repairs to a Damaged Propeller

1). The specific recommendation would depend upon a number of factors: (1) What is the present condition or structure of the metal? Is it as-cast, age hardened, or annealed? ;(2) What is the ductility of this material in this condition? Can it be mechanically reformed without fracture? ;(3) Would elevated temperature aid in the reshaping? ;(4) Would any subsequent treatment be required after reshaping to restore the desired properties?

If the material is in the as-cast or annealed condition (one can determine this by hardness testing), and if the material has sufficient ductility, a reshaping may be possible directly. However, one should keep in mind that the propeller has undergone extensive cold working in the initial bending and may not possess sufficient remaining ductility. If insufficient ductility is present, a softening anneal may be required before the reshaping should be attempted. Depending upon the available ductility and the extent of damage, a series of anneal and deform operations may be necessary.

Finally, consideration should be given to the desired service properties. If the material were directly restored to shape, the bent portions of the propeller would have undergone two rather severe cold forming operations, and would likely be very low in remaining ductility and, therefore, prone to fracture upon any subsequent impact. Since the initial propeller was able to sustain such a severe deformation without fracture, it appears that the initial condition was one with substantial ductility. Therefore, it may be desirable to restore uniform ductility through an anneal after the reshaping.

If the propeller had been age hardened for strength, this heat treatment should be reperformed after the straightening to again produce the strong, homogeneous structure.

Finally, after all heating and cooling, the propeller should be rebalanced to provide smooth running at high RPMs. An out-of-balance propeller can produce excessive loads on bearings and power train components in the engine.

2). In most cases, such a repair can be made, if done properly. The cracked region should be machined out to assure removal of all cracked metal and the exposure of good, clean metal surface. A matching chemistry metal (or near matching to prevent the formation of a galvanic corrosion cell) should then be deposited into the machined groove. Oxyacetylene welding or repair brazing would be the most likely techniques for such a repair.

After deposition, the surface should be rough ground and then fine ground or abraded to produce a smooth surface. Consideration should then be given to the structure of the base metal and the possible effects in the heat-affected zone. If necessary, the entire propeller should be heat treated to produce a uniform structure. Alternately, a stress-relief treatment should be considered to remove potentially damaging residual stresses imparted by the braze. Finally, the propeller should be rebalanced .

If properly performed by an experienced repairman, the repaired propeller will function adequately and will probably cost about half of a new part. Failure to perform a proper repair, however, will result in further cracking problems and the ultimate need to replace the component.

CHAPTER 18
Hot-Working Processes

Review Questions

1. Metal forming probably began with "tools" as simple as rocks being used to shape bits of naturally-occurring metal. Hand tools and muscle power then gave way to machine processes during the industrial revolution. The machinery further evolved, becoming bigger, faster, and more powerful, and the sources of power also changed. Most recently, computer control and automation have been incorporated.

2. Various means have been used to classify metal forming process. These include: (1) primary processes that produce intermediate shapes, and secondary processes that produce finished or semifinished products; (2) bulk deformation processes and sheet-forming operations; and hot-working processes and cold-forming processes .

3 . The division of metal forming processes into hot working and cold working is quite artificial. With increased emphasis on energy conservation, the growth of warm working, and new advances in technology, a temperature classification is often arbitrary. Processes normally considered as hot forming processes are often performed cold and cold-forming processes can often be aided by some degree of heating.

4. At elevated temperatures, metals weaken and become more ductile. With continual recrystallization, massive deformation can take place without exhausting material plasticity. In steels, hot forming involves the deformation of the weaker austenite structure as opposed to the much stronger, room temperature ferrite .

5. Ingots are usually the primary product supplied to rolling mills. Rolling is used to convert the primary product to wrought products that are called by different terms depending on cross section size and shape.

Simple cross section shape products of rolling such as rectangular, square or circular sections are separated by size with
- blooms having thickness greater than 15 cm,
- billets smaller than blooms with rectangular or circular cross section shape,
- slabs have rectangular section shape with width greater than twice the thickness,
- plates, sheets and strips have rectangular cross sections with differing width to thickness ratios.

Blooms and billets can be further rolled to slightly more complex cross section shapes to produce semifinished shapes such as bars and rods that are usually processes further.

Still more complex shapes can be produced by further rolling of billets, bars and rods to produce structural shapes finished products such as channel sections, I-beams and railroad rails.

6. Because the rolls are so massive and costly, and multiple sets of rolls may be required to produce a given product, hot-rolled products are normally available only in standard sizes and shapes for which there is enough demand to permit economical production.

7. In a rolling operation, friction between the rolls and the workpiece is the propulsion force that drives the material forward. If the friction force is insufficient to deform the material, the material remains stationary and the rolls simply skid over the surface. No deformation is achieved.

8. The temperature related concerns in rolling are the rolling temperature or nominal temperature of the work and the variation of temperature over the workpiece. The finishing temperature or the temperature during the final phase of hot rolling must be controlled since temperature affects grain size and the final properties of the rolled product. If finishing t temperature is not adequately controlled undesirable, nonuniform grain structure and properties such as strength will result.

If the rolled product is the final product it will have nonuniform properties and perhaps undesirable shape due to warping and twisting as the product emerging from the rolls responds to its nonuniform structure, properties and stress state. If the rolled product is to be further processes, any nonuniformities in microstructure and properties will affect material behavior in subsequent processing.

9. Early reductions (with thicker pieces) usually utilize two-high or three-high mills with large diameter rolls. The three-high configuration allows the material to be passed back-and-forth through a single mill without having to stop and reverse the direction of roll rotation. Smaller diameter rolls are more efficient when rolling thinner material, but are less rigid and flex into a distorted configuration. To utilize these more efficient rolls and yet provide rigidity, four-high mills are used with support being provided by the more-massive backup rolls.

10. Foil is almost always rolled in a cluster mill because
- small diameter rolls are used to roll thin product since this results in smaller roll-work contact area. The small reductions in rolling foil combined with large diameter rolls gives large, undesirable, rolling forces.
- small diameter rolls have low stiffness and so can deflect to unacceptable extent. To add stiffness to the entire rolling mill backup rolls are used and cluster rolling mills us for thin product such as foil.

11. In a continuous or multi-stand rolling mill, it is important that each stand pass the same volume of material in a given time so as to prevent buildup between the stands or tearing of the material being rolled. As the cross-section is reduced, length increases, so the rolls of each successive stand must turn faster than the preceding one by an amount

equivalent to the cross-sectional area reduction taken by the previous stand.

12. Ring rolling is used to produce rings or hoops having a uniform cross-section throughout the circumference.

13. Hot rolling is expected to produce little or no directionality in product properties and no residual stress. However, if large nonuniformity in structure and/or deformation is produced there will be directional properties, residual stress and the resulting characteristics that these effects produce, e.g., warping of relatively thin, complex shaped product due to residual stresses.

Nonuniform structure can result during hot rolling if nonmetallic inclusion exist in the work material. These inclusions do not recrystallize as the surrounding metallic material does and so nonuniform material and directionality of properties results.

Nonuniform deformation and nonuniform temperature and cooling rate will cause directional properties and residual stress. The extent of recrystallization depends on the amount of initial metal deformation and the time-temperature history of the cooling product. Rolling can produce nonuniform deformation over the rolled section, particularly in sections with varying, thin parts. The deformation pattern near surfaces of the part is different than in regions away from the surfaces (constraint on material deformation is due to surrounding material). So sections such as I-beam are deformed to different extent in different regions of the section.

Variations in cooling rate can produce residual stress. When cooling rate variations are combined with differences in deformation, directional properties and residual stresses can form during cooling from the rolling temperature.

14. The rolling of uniform thickness product requires that the gap between the rolls be uniform. Three-point bending occurs when the rolls are loaded in the middle and supported by bearings on either edge. Attempts to compensate by "crowning" the rolls are designed for a specific load, which may vary with changes or fluctuations in material, temperature, lubrication, and other factors. When the thickness is not uniform, the amount of lengthening will not be constant over the entire width, resulting in such defects as wavy edges, wavy center, fractured edges, or fractured center.

15. Crowned rolls, rolls with varying diameter along the roll length, are used to compensate for roll flexure during rolling. Roll flexure depends on the forces acting on the rolls, the roll cross section shape and the mechanical end or support conditions at the roll end. Since the roll support conditions are constant, the roll design problem is to specify the roll shape to compensate for roll deformation due to the rolling forces. Rolling forces depend on the amount of workpiece deformation, the work deformation pattern, friction and work material properties. That is the rolling forces depend on the particular rolling process and material and so crowned rolls have to be designed for the – particular process and work material.

16. Thermomechanical processing consists of simultaneously performing both deformation and controlled thermal processing so as to directly produce the desired levels of strength and toughness in the as-worked product. The heat for the property modification is the same heat used in the forming operation, and the need for subsequent heat treatment is often eliminated. Product properties can be improved and cheaper materials might be employed .

17. Steam or air hammers use pressure to both raise and propel the hammer. They give higher striking velocities, more control of the striking force, easier automation, and the capability of shaping pieces up to several tons. Computer control can be used to provide specified blows of energy for each step of a process.

18. Open-die forging does not confine the flow of metal in all directions, so the final shape is dependent upon the manipulation and skill of the equipment operator. Impression-die forging operations confine metal flow in all directions to provide good repeatable control of size and shape.

19. Open-die forging is not a practical means for the production of large quantities of identical parts because the shape is produced by manipulation and positioning of the workpiece in the hands of a skilled operator (flow of metal is not controlled) rather than by rigid confinement in a set of shaped dies. Each workpiece, therefore, is a separate entity and is not identical to the others.

20. Because flashless forging involves total confinement of the material within the die cavity, precise workpiece sizing is required along with precise positioning of the workpiece within the cavity and control of the lubrication.

21. In forging the initially very simple shape workpiece is forged to the final shape in series of operations using a series of more complex shape dies. In the intermediate operations the dies are used for blocking the material to close to it final shape and the impressions on the blocking dies are blocking impressions.

22. Because counterblow machines permit the excess energy to be dissipated in the form of recoil, there is a reduction in the amount of noise and vibration, two of the major concerns of regulating agencies concerned with the forging industry.

23. Dimensions contained entirely within a single die cavity can be maintained with considerable accuracy. Dimensions across the parting plane are dependent upon die wear and the thickness of the final flash. While frequently within several hundredths of an inch, these dimensions are noticeably less precise than dimensions set totally within the die cavity.

24. Press forging is often preferred to hammer forging when the workpiece is large or thick and the energy of the hammer is insufficient to produce uniform deformation.

25. Heated dies are usually employed in press forging because the long time of die

contact with the hot workpiece would otherwise permit considerable surface cooling and could produce cracking of the surface.

26. Hammers impart a blow of energy, travel at high speed, and have short time of actual contact. Presses have longer periods of contact and apply a squeezing action or force. Mechanical presses have consistent and reproducible stroke, and are more rapid than hydraulic presses, which are more flexible and can have greater capacity. Since they move in response to fluid pressure, they are controlled by forces or pressures and position is not as reproducible.

27. Upset forging is the term applied when the diameter of a piece of material is increased by compressing its length.

28.Upset forging operations are often used to forge heads on bolts and other fasteners and to shape valves, couplings, and a number of other small components, like those illustrated in Figure 18-15.

29. Automatic hot forging offers numerous advantages. Input material is low cost and production rates are high. Minimum labor is required and scrap production is reduced. The as-forged structure is often suitable for machining. Tolerances are good, surfaces are clean, and draft angles are low. Tool life is nearly double that of conventional forging. On the negative side, however, is the high initial cost of the equipment and the restriction of large production quantities.

30. Roll forging is a process by which round or flat bar stock is reduced in thickness and increased in length. A heated bar is placed between two semicylindrical rolls containing shaped grooves, and as the rolls rotate, the bar is squeezed and rolled out toward the operator.

31. Swaging refers to two kinds of material deformation (in contrast to material removal) manufacturing processes. Swaging can be the hammering of a rod or tube to a final shape by a series of blows from a die that acts as the hammer. The hammer/die can be shaped and the work rotated to produce parts with relatively complex cross sectional shapes. This is usually a cold working process.

Swaging also refers to a process in which a simple cross section workpiece is forced trough a die to change its “diameter” or cross section size. Typically this process is performed at elevated work temperature. This process is conceptually similar to wire or rod drawing but usually applied to large sections with little imposed deformation.

32. The objective of net-shape or near-net-shape forming is to directly form products that are close enough to specified dimensions that few or no secondary operations are required. Cost savings and increased productivity can be attributed to the reduction in secondary machining operations, reduced quantities of generated scrap, and a decrease in the energy required to produce the product.

33. The extrusion process offers a number of attractive features. Almost any cross-sectional shape can be extruded, including many that could not be achieved by rolling. Size limitations are few. No draft is required, and the amount of reduction in a single step is limited only by the capacity of the equipment. Frequently only one die is required for a product. Because only a single die change is required to change products, small production quantities are economically feasible. Dimensional tolerances are quite good.

34. The primary limitation of the extrusion process is that the cross section must be the same for the entire length of the product being extruded.

35. In indirect extrusion there is no relative motion between the sides of the workpiece and the extrusion container. With no motion there is no friction and the primary attraction of indirect extrusion is that no frictional energy dissipation occurs in the process.

36. In extrusion, the final surface area is considerably greater than the surface area of the starting billet. Therefore, as the material is flowing through the extrusion die, the initial layer of lubricant must spread and thin by a substantial amount, while still functioning as an acceptable lubricant.

37. In a spider-mandrel extrusion die, the flow of material divides into several channels and then reforms. If the surfaces are fresh, uncontaminated metal, they can be pressed together to form high-quality, virtually undetectable, welds. If a lubricant were used, the surfaces of the various segments would acquire a coating of lubricant that would prevent the formation of the welds necessary to produce the continuous wall around the hollow shape.

38. Hot drawing can be used to produce tall, thin cups, by several methods. If the wall thickness can be thinner than the base, drawing with ironing can be employed. If uniform wall thickness is desired, one or more redraws, or multiple-die drawing can be used.

39. Ironing is the name given to the process where a cup is placed over a punch and driven through a die where the gap between the punch and die is less than the cup material thickness. The cup wall is thinned and elongated, while the bottom thickness remains unchanged.

40. Steel skelp can be converted into pipe by either butt welding, or lap welding operations. The welding operations occur simultaneously with the hot deformation.

41. In hot-piercing operations, the billet is forced over a pointed mandrel that is held in place in the roll gap. Since the product must flow over the mandrel and the mandrel must be held rigidly in position, the length of product tubing cannot exceed the length of the mandrel (which is rather limited).

Problems:

1. The assignment here is direct and needs no further explanation .

2.

a. S = surface area without ends

$S_{product} = \pi\, d_p\, L_p$

$S_{billet} = \pi\, d_b\, L_b$

$S_{product} / S_{billet} = d_p L_p / d_b L_b = \{ (0.03 \text{ m})(7.5 \text{ m}) \} / \{ (0.15 \text{ m})(0.3 \text{ m}) \} = 5$

b. $S_{product} = 4$ (edge length) (product length) $= 4\, a\, L_p$

$S_{billet} = \pi\, d_b\, L_b$

$S_{product} / S_{billet} = 4\, a\, L_p / \pi\, d_b\, L_b$

work material volume is constant so with
cross section area A
$A_b L_b = A_p L_p$
$L_p / L_b = \{ (\pi/4) (0.15 \text{ m})^2 \} / \{ (\pi/4) (0.03 \text{ m})^2 \} = 25$
same final cross section area so
$a^2 = (\pi/4) (0.03 \text{ m})^2$
$a = 0.0266$ m

$S_{product} / S_{billet} = \{ 4 (0.0266 \text{ m}) (25) \} / \{ \pi (.15 \text{ m}) \} = 5.64$

c. The problem says the reduction ratio, R, is 25 => $R = A_b / A_p$
with A being the cross section areas

the surface area ratio is

$Sp / Sb = (\pi\, dp\, Lp) / (\pi\, dp\, Lp)$

since work material volume is constant
$A_b L_b = A_p L_p$
$L_p / L_b = A_b / A_p = R$
the cross section areas are
$A_b = (\pi/4)\, d_b^2$
$A_p = (\pi/4)\, d_p^2$
and
$d_p / d_b = \text{SQRT}(A_p / A_b) = \text{SQRT}(R)$

$Sp / Sb = R / \text{SQRT}(R) = \text{SQRT}(R)$

3. a).Force = (.441) x 50,000 x 3.309 = 73,100 pounds

b) .At maximum force of 60,000 pounds, the pressure will be

= 60,000 / Area of the penny
= 60,000 pounds *I* 0.441 square inches
= 135,900 psi

4. Strip thickness is in the denominator of the equation and so the roll separating force will increase with decrease in strip thickness. For very small thickness as in foil, the roll separating force can become substantial.

One way to minimize the effect of thin materials is to note that the term is proportional to R/t_{av}. Therefore, if the diameter of the rolls can be decreased in proportion to the decrease in thickness, the effect can be canceled.

The various types of rolling mills and their uses, as described in the text, follow this trend. Billets, blooms and thick slabs are rolled in two-high mills with large diameter rolls (often in the range of 22 to 28 inches in diameter). Conventional sheet and strip is rolled on four-high mills with work roll diameters typically in the range of 4 to 10 inches. Foils are rolled on cluster mills with the contact roll being as small as ¼ inch in diameter, and multiple thicknesses may be rolled simultaneously to increase the total thickness being rolled.

5. The area under the direct extrusion curve is proportional to the work required to form the product with billet-chamber friction. The area under the indirect curve is the work required to form the product without frictional resistance. Therefore the "efficiency" of the direct extrusion process could be regarded as the fraction of the total work that is producing deformation. This can be computed as the percentage of the direct curve that is within the indirect region, i.e. the area under the indirect curve, divided by the area under the direct curve, times 100%.

Case Study:

Outboard Motor Brackets

1. The requirements for this part include static strength, corrosion resistance to salt and fresh water, light weight and resistance to vibration. A variety of engineering materials would be possibilities, including aluminum, titanium, magnesium and even the copper-base alloys. Copper is heavier than steel and would only be recommended if other alternatives failed. The corrosion resistance of magnesium is questionable and the cost and fabrication difficulties do not favor titanium. Some form of aluminum alloy would appear to be the attractive choice – either a casting alloy or a wrought alloy, depending on the recommended fabrication process.

2. The geometry (size and shape) is such that impression-die forging or some form of casting process would be the obvious alternatives. The various pros and cons can be evaluated with consideration being given to the estimated production quantity. If forging is selected, the recommended material should be some form of wrought aluminum. If cast, the recommended alloy should be selected for compatibility with the process. NOTE: There are aluminum alloys specifically designed for use with processes such as die casting.

3. If aluminum alloys are used, an age hardening treatment would most likely be required to achieve the desired mechanical strength. This would involve the stages of solution treatment, quenching and aging.

4. The corrosion resistance of aluminum would be adequate for fresh water usage, but might be attacked by salt water. Treatment might be utilized to provide aesthetics as well, and in this case, a color anodizing treatment, such as that commonly seen on aluminum softball bats, might be preferred.

CHAPTER 19
Cold-Working Processes

Review Questions;

1. Attractive features of cold working over hot working include: no heating is required, surface finish is better, dimensional control is superior, reproducibility is better, strength properties are improved so cheaper material may be utilized, directional properties can be imparted, and contamination problems are minimized.

2. Cold-working equipment is usually more powerful that that used for hot-working because the starting material is stronger (no thermal softening), and the material becomes even stronger as it is being formed due to the effects of strain hardening.

3. Sheet or strip is often given a skin-rolled reduction pass to produce a smooth surface and a uniform thickness, and also to improve the yield-point phenomenon that causes the formation of Luders bands.

4. The cold rolling of shaped products generally requires a series of shaping operations, each requiring a separate pass through specially-grooved rolls. Since these rolls are usually expensive, two such rolls are required for each pass, and multiple passes are usually required to produce a product, large production quantities are usually requires to justify the expense of the shape-rolling process.

5. If the starting material is a tube, and a shaped mandrel is inserted before swaging, the metal can be collapsed around the mandrel to simultaneously shape and size the interior and exterior of the product.

6. Viewing material waste as the chips generated in machining a part, if the same shape can be produced by forging, cold forging saves material since chips are not formed.

If machining operations are needed to finish hot formed products, cold forging can reduce material waste if products can be cold forged to within dimensional and shape tolerances. Again, finish machining is not needed.

Depending on the tolerances specified, cold forging can be used to produce parts close enough to required final dimensions so machining in not required and material is not lost to chips.

7. With cold forging, production rates are high, dimensional tolerances and surface finish are excellent, and machining can be reduced. Strain hardening can provide additional strength, and favorable grain flow can be imparted.

8. By combining extrusion and cold heading, the product can be made from a starting stock of intermediate size. Here, the upset head can now be made easily from the starting material size, and the extrusion of the shank reduces the need for extensive machining.

9. In the hydrostatic extrusion process, billet-chamber friction is eliminated, billet-die lubrication is enhanced by the pressure, and in the pressure-to-pressure mode, the pressurized environment suppresses crack initiation and growth and enables the extrusion of relatively brittle materials. Unfortunately, temperatures are limited, sealing problems are common, and complete ejection of the product by the pressurized fluid must be avoided.

10. In pressure-to-pressure hydrostatic extrusion the work material moves from one pressurized chamber to another pressurized chamber. The effect of forming the work material under pressure is to minimize void formation, crack initiation and crack growth. Since the work is always under pressure crack initiation is minimized and the material’s ductility is increased.

With increased ductility materials can be deformed to a greater extent in extrusion and normally brittle materials that cannot be extruded may be have enough ductility imparted to them that they can be extruded.

11. Surface friction is the propulsion force in continuous

12. Roll extrusion is typically used to produce thin-walled cylinders with diameters ranging from 3 to 20 inches.

13. When only one side of a joint is accessible, riveting can be accomplished through the use of either explosive rivets, or pull-type or pop-rivets where the shank on the inaccessible side is expanded mechanically.

14. One hardened hub can be used to form a number of identical cavities, so only one part needs to be machined to precision. In addition, it is often easier to machine a male shape on the hub as opposed to a female cavity in the die.

15. During peening, the highly localized blows deform and tend to stretch the metal surface. This surface deformation is resisted by the metal underneath, producing a compressive residual stress in the surface. Since the compressive stresses subtract from applied tensile loads, they serve to impart added fracture resistance to the product.

16. Burnishing involves rubbing a hard object over the surface of a material under considerable applied pressure. Minute surface protrusions are deformed, producing a smooth, deformed surface .

17. "Bending[31] is plastic deformation about a linear axis with little or no change in surface area. When multiple bends are made in a single operation, that operation is often called "forming". If the axes of deformation are not linear, or are not independent, the

process is called drawing".

18. When a material is bent, the material on the outside of the bend is elongated, while that on the inside is compressed. Since the material yields first in tension, more deformation occurs by the tensile mode than the compressive one, and the net result is a thinning of the bend.

19. Springback is the tendency of the metal to unbend somewhat after bending. This is a natural consequence of the outside tension and inside compression of the material and the material seeking to relax these stresses. To form a desired angle, a material must be overbent to compensate for springback

20. Press brakes can be used to produce simple bends, complex bends, seaming, embossing, punching, and other operations.

21.In overview, minimum bend radius is set by the condition that the strain at the material tensile surface becomes equal to the fracture strain of the material in a tensile test.

The minimum bend radius is determined by:
- The ductility of the work material, usually specified by the percent reduction of area at fracture in a tensile test. The higher the ductility the smaller the minimum possible bend radius.
The thickness of the work material. For a given bend radius the thicker the material the smaller the strain at the material surfaces.

The usual bending process-material behavior parameter used to describe bending radius is R/t with R the bend radius and t the material thickness.

22. Whenever possible, the bend axis should be perpendicular to the direction of previous rolling. If two perpendicular bend axes are involved, the metal should be oriented with the rolling direction at 450 to both axes.

23. By designing products to have all of the bends with the same bend radius, manufacturers can significantly reduce setup and tooling costs. The same tooling can then be used to produce all bends.

24. Bottoming dies compress the full area within the tooling, while air-bend dies form the desired geometry through simple. three-point bending. Air-bend tooling is quite flexible since the degree of bend can be varied by a simple change in press position. Bottoming dies, however, produce a more consistent product .

25. Roll bending produced curved shapes when plates, beams, pipe and structural shapes move through a set of closely spaced rolls, Figure 19-29. Although the radius of curvature of the workpiece can be varied as it is being formed by continuously changing roll spacing, usually roll position is fixed. So the type of parts produced are those with

constant curvature. An example is the individual short sections of jet engines that are joined to form the entire engine housing.

26. To prevent flattening at the outside or wrinkling at the inside of a tube when it is bent the tube material can be supported so as not to deform or the imposed deformation state can be altered. Packing an easily removed material such as sand in the tube before bending can support the tube and decrease flattening and wrinkling. Using flexible tooling, e.g., flexible mandrels changes the loading and deformation imposed on the tube in bending and so can reduce flattening and wrinkling.

27. Cold roll forming progressively bends flat strip into complex (but uniform) cross-sectional shapes. Various moldings, channeling, gutters and downspouts, automobile bumpers, and other uniform cross section shapes have been produced. Short lengths of specialized products would be better produced by tools like a press brake, because of the high cost of the roll forming tooling
--multiple sets of profiled rolls.

28. Rod or sheet can be straightened by two techniques: (1) roll straightening (or roller leveling) which involves a series of reverse bends designed to stress the material beyond its elastic limit, and (2) stretcher leveling in which the material is stretched beyond its elastic limit.

29 Shearing is the mechanical cutting of materials without the formation of chips or the use of burning or melting.

30. Sheared or blanked edges are generally not smooth because the cutting tools actually deform the material only to the point where the applied stresses exceed the rupture strength of the remaining material. The remainder of the edge is produced by a metal fracture and has a rough appearance.

31. If the punch and die (or shearing blades) have proper clearance and alignment and are maintained in good condition, the sheared edges can often be sufficiently smooth to avoid the need for further finishing. Edge condition can be further improved by clamping the stock firmly against the die from above and restraining the movement of the piece through the die by an opposing plunger or rubber cushion that applies pressure from below the workpiece.

32. Since fineblanking presses incorporate separate motions and forces for the punch, hold-down or clamping ring, and opposing (or bottom) punch, they are multiple-action machines and are noticeably more complex than presses used in conventional blanking .

33. Progressive shearing involves a smaller volume of material being sheared and so a smaller shearing force than if the entire sheared length is produced at the same time.

The force required for shearing depends on the work material strength and the volume of material being deformed. In shearing the deformation zone thickness perpendicular to the shear is constant so the deformation volume is proportional to the length of the deformation zone in the direction along the shear edge. Progressive shearing takes place in a smaller deformation zone than one long shear.

34. Slitting is the length-wise continuous shearing process used to slice rolls of material into narrower strips. The work material passes between rolls that have grooves that form shearing edges.

35. Piercing and blanking are both shearing operations in which a curved shearing punch pushes material into a die. They both involve the same cutting action, but when the piece being punched out is the scrap the process is piercing, and when the piece being punched out is the product, the process is one of blanking.

36. In the progressive piercing and blanking operation shown in Figure 19-50 the ram holds both the piercing punch and blanking punch so both tools move up and down at the same time. If the piercing and blanking punches were the same length at least two problems would arise. One problem is that the deformation processes occurring in the piercing region and in the blanking region would interact. Control of the deformation processes and so of the accuracy and quality of the part produced would be lost. Another problem is that the mechanisms used to hold down the work during piercing and punching, and the overall machine, would have to be heavier and stiffer to withstand the higher processing forces.

37. Variations of piercing and blanking that have come to acquire separate names include: lancing, perforating, notching, nibbling, shaving, cutoff, and dinking.

38. By grinding a slight angle on the face of a piercing or blanking punch, the maximum cutting force can be reduced. Instead of the entire circumference being sheared simultaneously, the angle allows the cut to be made in a progressive fashion, much like the opening of a pull-tab on a beer or soda can.

39. To produce a uniform cut, it is important that a blanking punch and die be in proper alignment. A uniform clearance should be maintained around the entire periphery.

40. By mounting punches and dies on independent die sets, they can be positioned and aligned prior to insertion into the press, thereby significantly reducing the amount of production time lost during tool change.

41. Standard subpress dies can frequently be assembled and combined to produce large parts that would otherwise require large and costly die sets. In addition, when the die set is no longer needed, the components can be removed and used to construct tooling for another product.

42. When dies are constructed as multipiece assemblies die components can be individually changes into the die or modified. Whether for changing overall die configuration or for repairing or regrinding shearing components of the die, dealing with one component of the die rather that a large one piece die is easier, safer and less expensive.

43. A progressive die set consists of two or more punches and dies mounted in tandem. Strip stock is fed through the dies, advancing incrementally from station to station with each cycle of the press performing an operation at each of the stations. Figure 19-50 illustrates a progressive die operation.

44. In progressive dies one or more punches are mounted in one punch holder and all punches more at the same time. The work material movement is usually linear between the different stations in the die, e.g., sequentially punching of strip work material. In transfer dies usually individual parts are moved from die to die in a single press with the possibility of changing part orientation between the dies that perform one operation each.

45. In compound dies more than one tool is mounted in the die at essentially the same location in the machine tool. The machine motions and tools actuation are such that the punching processes occur sequentially at one location in the machine, Figure 19-51. In progressive dies, Figure 19-50, individual tools are mounted at different locations and the work material moves to each and through a sequence of punch positions.

In progressive dies the punching processes are sequential with all tools moving at the same time and the work moved between punch strokes. In compound dies sequential operations are performed on a stationary working piece with sequectual actuation of different tools.

46. Turret-type punch presses have the capability of holding a large number of punches and to quickly set punch-work position by moving the workpiece. This enables a large number of different size and different shape holes to be placed in complex patterns.

47. The term cold drawing can refer to two different operation. For sheet metal, cold drawing involves plastic flow of material over a curved axis, as in the forming of cup-shaped parts. If the stock is wire, rod, or tubing, the term applies to a process where the cross section of the material is reduced by pulling it through a die.

48. In tube drawing, rigid tooling is used to accurately size both the inner and outer diameters of the product. In tube sinking, only the outside diameter is directly controlled (there is no mandrel or plug to restrict and size the inner diameter) .

49. Tube drawing with a floating plug can be used to produce extremely long lengths of tubular product with a controlled inner diameter .

50. Straight-pull draw benches are normally employed to produce finite lengths of products that cannot be conveniently bent or coiled. Wire, and smaller products that can

be coiled, is generally drawn in a continuous operation on draw blocks where the length of product is limited only by the amount of starting material .

51. Because the reduced section of material is subjected to tensile loading in the wire drawing process, the possible reduction is limited by the onset of fracture. In order to affect any significant change in size, multiple draws are usually required .

52. Since the metal being deformed by spinning deforms under localized pressure and does not flow across the form block under pressure, the form block can be made of relatively inexpensive material, such as hardwood or even plastic.

53. During shear forming, each element of the blank maintains its distance from the axis of rotation. The metal flow is entirely in shear and no radial stretch has to take place to compensate for the circumferential shrinkage. Wall thickness, however, will vary with the angle of that region to the axis of rotation .

54. Stretch forming is used to form large sheet metal components that have relatively small production quantities.

55. In drawing of sheet metal the typical part is, in a very general sense, a closed bottom-open top shaped structure, e.g., cylindrical cans and rectangular automobile oil pans. When the part depth is less than the smallest opening dimension the drawing process is called shallow drawing. Deep drawing processes produce parts with depth greater than the smallest opening dimension.

56. The pressure-ring or hold-down in a deep-drawing operation serves to control the flow of metal and suppress wrinkling, tearing, or undesirable variation in thickness.

57. There are three major reasons that thin material may be difficult to draw into a cup, compared to thicker material.

i. Thin work material is susceptible to tearing. In cup drawing tensile stresses arise in the cup wall as it is being drawn. Tensile stress increases as wall thickness decreases if there is not a corresponding decrease in tensile force. In draw the force acting in the wall of the forming cup is due to stretching, bending and friction. The effects decreasing work thickness on increasing wall stress are greater than the effects of wall thickness on decreasing wall force.
ii. Thin work material is more likely to buckle in the flange region. If the wrinkling extends into the cup wall region it is not likely to be removed when the top edge of the cup is trimmed.
iii. In tensile deformation materials may exhibit tensile instability. This instability is analogous to the nonuniform deformation in necking in the tensile test. Nonuniform deformation is itself a defect in a drawn cup and can act as a site of locally increasing deformation leading to tearing.

58. Draw beads are protrusions and matching grooves on the faces of the die and blankholder or blank holddown plate.

The purpose of drawbeads is to locally impede the flow of the workpiece into the die and so control deformation in drawing processes.

For example, in drawing a rectangular part the material along the straight sections of the die flows more easily into the die that the material around the die corners. To produce more uniform deformation over the forming part the material flow along the straight sections can be restricted by building drawbeads into these sections of the die.

59. Because of prior rolling and other metallurgical and process variables, the flow of metal in deep drawing is generally not uniform in all directions. Excess material is often required to assure desired final dimensions, and a trimming operation is generally employed to establish the final dimensions.

60. The Guerin process employs rubber as the female die, providing the pressure necessary to wrap the sheet metal around a male punch. The hydroform process replaces the female die member with a flexible diaphragm backed by hydraulic pressure. Both processes eliminate the female die member to substantially reduce tooling cost.

61. Bulging using fluid or rubber tooling can be performed by
- holding the workpiece on a machine base so that the hollow workpiece is closed at one end,
- placing fluid or rubber tooling in the part,
- closing the top of the workpiece either with the punch to be used or separate mechanism,
- using a punch to increase fluid pressure or deform the rubber tooling,
- apply enough punch displacement so that the workpiece bulges to a confining split die to form the part,
- release the punch and remove the part from the die.

62. Sheet hydroforming is a process in which a fluid under pressure replaced the solid punch or die in conventional forming. In one process configuration the fluid may act as a punch on one surface of the sheet workpiece to force the work material into a die. In another configuration the fluid may act on the free side of the work material to force it to bend over and conform to a punch.

63. The deformation of the work material in sheet hydroforming is more uniform than in conventional, hard tooling, forming processes. In hydroforming uniform pressure is exerted over the entire workpiece and so deformation is uniform. The uniform strain means that locally nonuniformly strained regions do not exist, and so cannot interact and increase local deformation bringing the material locally closer to its forming or ductility limit. The material is more formable in hydroforming.

64. Regions of the tube that increase in diameter in tube hydroforming experience wall thinning. To compensate for the wall thinning the end of the tube can be compressed. The inward movement of the end plugs is supposed to cause tube compression and help compensate for wall thinning.

65. The high energy-release rates needed by the HERF processes can be obtained by: underwater explosions, underwater spark discharge, pneumatic-mechanical means, internal combustion of gaseous mixtures, and the use of rapidly-formed magnetic fields.

66. Two factors account for the low springback observed during high-energy-rate forming. High compressive stresses are set up when the metal is forced against the die, and some elastic deformation of the die occurs under the high applied pressure, allowing the workpiece to become somewhat overdeformed.

67. Common examples of ironed products include brass cartridge cases and the thin-walled beverage containers. Common embossed products include highway signs (like STOP signs) and industrial stair treads.

68. The intent of superplastic forming is to make it possible to produce very large strains in the workpiece. With regard to workpiece material, ultrafine, uniform grain size increases material ductility and so makes the material suitable for superplastic forming.

Materials are more ductile at higher temperatures and less ductile at higher strain rates. So with regard to processing conditions, superplastic forming is carried out at high temperatures and very low strain rates.

69. The major limitation to superplastic forming is the low forming rate that is necessary to maintain the superplastic behavior. Typical cycle times may be on the order of 5 to 40 minutes per part. on the positive side, superplastic forming has made possible the economical production of complex-shaped parts in limited production quantities. Deep or complex shapes can be made as one-piece, single-operation pressings, rather than multistep conventional pressings or multipiece assemblies. The required forces are low. tooling is relatively inexpensive, precision is excellent, and fine details can be reproduced.

70. By measuring and evaluating the distorted grid pattern, regions where the area has expanded can be detected as locations of sheet thinning and possible failure. Areas that have contracted have undergone thickening and may be sites of possible buckling or wrinkles.

71. A forming limit diagram is a plot of the major strain and related minor strain on the surface of metal sheet, indicating the conditions for which fracture occurs. Deformation in regions below this line (the forming limit) can be performed without fracture. Deformation which induces strains at or above the line will incur fracture.

72. In the right hand section of the forming limit diagram the minor strain measured in a forming deformation experiment is positive. In the left hand region of the forming limit diagram the measured minor strain is negative.

73. Thin complex-shape products can be produced without the use of metalforming techniques through processes such as electroforming, in which metal is electroplated onto an accurately-shaped mandrel and stripped free, and plasma spray forming, where molten metal is sprayed onto a shaped mandrel where it then solidifies.

74. In general, mechanical drives provide faster action and more positive displacement control. Once designed, the stroke of a mechanical press is fixed and cannot be changed. In addition, the available force varies with position and is greatest near the bottom of the stroke. Hydraulic drives offer greater forces and more flexibility of forces, speeds, and strokes. They are generally slower than mechanical drives and do not offer as great a control of position or displacement.

75. Presses with different types of frames are gap-frame presses, open-back presses, inclinable presses and straight-sided presses.

76. Inclinable presses are often tilted to enable ejection of the finished parts to be accomplished with the aid of gravity or compressed air jets.

77. A transfer press is designed to accept a number of die sets, positioned side-by-side to create a multiple station (progressive die-type) operation. With each stroke of the press, each individual station performs its operation on the material positioned between the dies. The strip material then advances forward to the next station, where the press undergoes another cycle. Since all operations are performed simultaneously with each stroke of the press, one product is made per stroke.

Problems:

1. The wire drawing process can be characterized as continuous (provided the various segments of incoming product can be butt welded), but limited in reduction. Since the deformation force is applied as tension to the reduced product, the maximum reduction in area (for perfect frictionless conditions) is 62%, and a typical reduction is between 20 and 50%. The process works for almost all ductile materials and can be performed at high speeds. Because of the large surface area and small volume, the material is rarely heated; most operations are performed at room temperature. Hydrodynamic lubrication is possible because of the high relative speed between the workpiece and die.

Conventional extrusion can perform massive reductions in a single operation (up to a 400 to 1 reduction ratio), but is limited to finite length segments of starting material (i.e. it is a piece-rate process). The process can be performed both hot and cold on both nonferrous and ferrous metals. Because of the large amount of deformation and the conversion of deformation energy into heat, the speed of the process is often rather limited. High strength materials are usually formed hot with special lubricants to prevent pressure welding to the chamber and/or die.

Continuous extrusion is an attempt to achieve the best of both worlds -- namely a continuous, high-reduction process. Present techniques are largely limited to the weaker, nonferrous metals, and are usually conducted with room temperature starting stock. Speeds can be relatively fast, provided adequate cooling can be provided to offset the adiabatic heating induced by the large amounts of deformation being performed in a single operation .

2. Tubular products – advantages and limitations have to do with both the production process and the functioning of the product in use.

Process	Advantages	Limitations	Applications
Extrusion	- high accuracy - small tolerance - uniform properties along length and around circumference - low surface roughness - high strength if cold extruded - no seam	- complicated tooling - limited length due to mandrel - extra operation to join - welded joints, seams have different properties than rest	- high performance tubing such as in heat exchangers
	deformation texture may be advantageous or detrimental - e.g., advantageous for along tube loading, weaker in hoop direction under internal pressure loading		
Seam Welding, Forming and Butt-welding	-simple forming operation - high speed process	- workpiece heating needed - different properties in welded zone - only easily welded materials - internal support needed for large diameters	- common pipe and tube
Piercing	- seamless - large diameter	- limited length - subsequent sizing may be required	- fabrication of small, low pressure, pressure vessels
Drawing	- high strength if cold drawing - accurate	- limited length if mandrel used	- high performance, short tubes as in high pressure hydraulic lines

3. Applications are shown in Figure 19-79.
A cursory search for "hydroforming" gave

www.thefabricator.com/xp/Fabricator/Articles/Experts/Article111/Article111_p1.xml

containing pictures of exhaust manifolds, mention of a rear axel and a description of the advantages accrued in an automobile frames. A list of advantages and disadvantages of hydroforming is provided.

www.cooper-cooper.com.hydroform.htm

contains photographs of several different kinds of products

www.lajonchere.com/hydroform.htm

has a simple animation of the hydroforming process that summarizes the process steps and schematically shows the production of a product, a bellows-like part.

4. The amount of springback depends on the deformation imposed on the material during processing and on the elastic modulus of the work material. This general concept is summarized in Figure 17-6. The typical solution to springback is to overform the workpiece so that it will spring back to the desired final shape.

Given that springback depends only on the modulus of elasticity for a given radius, single axis bend, springback cannot be minimized, but only compensated for, in this case.

To minimize springback in the general case of possibly changing material and part design leads to two general approaches.

i. Changing to a material with larger elastic modulus will result in less springback for the same single axis bend. Changing to a different alloy of the same class of material will have little benefit since alloying has only small effects on elastic properties.

ii. More complex bends can reduce springback since the bends will interact with each other in determining overall springback. This is a radical solution and requires accurate deformation models of complex processes.

5. Residual stresses in cold working result from different amounts of deformation in different regions of the workpiece. Residual stresses will be high, and so important and probably intensely studied, for processes that produce large deformation gradients in the workpiece/product.

One such process is rolling. It is easy to imagine that as the amount of reduction is increased workpiece deformation zones near the surfaces grow and eventually overlap. Conceptually, for light reductions more deformation is expected near the surfaces of the workpiece than further into the work. This will result in compressive residual stress near the surface balanced by tensile residual stresses in the central region of the work. As reduction increases the deformation becomes more complex with frictional constraints at the surface and overlapping deformation. While the net result is not clear, it is clear that the residual stress state will be different.

A short internet search for “residual stress” & “rolling” yields many useful results. The residual stress distributions in both rolling and transverse directions and the distributions after stress relief for a typical rolling operation are shown at www.lanl.gov/projects/residual/alum.html

The results show not only compressive and tensile residual stress regions but also qualitatively different distributions before and after stress relief.

Case Study:

Diesel Engine Fuel Metering Lever

NOTE: This problem is particularly attractive because of the large variety of material-process combinations that can meet the requires geometric, physical, and mechanical properties.

1. As is usually the case, the part could be fully machined from a large piece of metal, such as a rectangular flat. This, however, is usually an inefficient use of material and time and labor considerations may be restrictive, especially for a production run of 10.000 pieces.

The small size of the part, smooth surface finish, and presence of a through hole, make the part attractive for one of several casting processes, including investment, die and, permanent mold. In addition, the part might even be attractive for centrifuging.

Noting that many of the surfaces are flat and parallel (such that if the part were viewed along the hole axis, the cross section would be uniform), one might want to consider extrusion of a shaped section, rolling of a shaped bar, or cold drawing, plus machining to remove the unwanted portions of the metal. This would significantly reduce the amount of machining from the first alternative in this section.

Finally, the prescribed size and small wall thicknesses render the part a candidate for powder metallurgy, or P/M injection molding, as a means of production.

2. These properties are not very restrictive and can be met by a number of metals and alloys, both ferrous and nonferrous. These include most steels, ferrous P/M alloys, copper-base alloys, some heat-treatable aluminum alloys, zinc-aluminum die casting alloys, and a variety of others.

3. The processes listed in part one include both wrought forming and casting, as well as powder metallurgy. This section is designed to get the student to focus on process-material limitations. Almost all metal can be machined, but if 100% machining were to be employed, a free-machining metal or alloy should be seriously considered. Of the cast processes, investment would be the slowest and most costly. This would probably only be considered if ferrous materials were required. Since alternative metal systems can provide the desired properties, die casting of either a copper-base or zinc-aluminum alloy would be an attractive alternative. Ferrous materials cannot be die cast and the higher-melting-point copper-base alloys have a limited die life, so the zinc-aluminum, alloys might be preferred here. Extrusion would require a ductile, wrought alloy, such as an age

hardenable aluminum. Cold drawn bars of low carbon steel would also meet the requirement and copper-base alloys might be considered here. If powder metallurgy were pursued, a ferrous powder would likely be required, but the low hardness and ductility requirements provide ample room for such a solution. The complexity of shape might lead to a preference for P/M injection molding over the conventional press-and-sinter powder metallurgy approach.

4. The conclusion as to which solution is the best is indeed a question of “multiple shades of gray”. Each of the above possibilities has merits and the “best” solution may well be based on the experience, available equipment and expertise, and current economics of the various processes and materials.

In each case, the form of the starting material would be different. Full machining would begin with mill-length bars of standard configuration. Casting would begin with melt quality ingots. If using extrusion or complex cross-section bars, the primary operation would likely be contracted out to a specialist firm and the product could be purchased with a specified degree of cold work amenable to both finish machining and final properties. Powder metallurgy would begin with a specified blend of powder and lubricant.

The necessity for heat treatment again depends on both the material and the method of manufacture. Some of the above systems would require age hardening to attain the desired final properties. Ferrous P/M would require a quench and temper. Other alternatives could meet the goals with cold work.

CHAPTER 20

Review Questions

1. Plastics, ceramics and composites are substantially different from metals in both structure and properties. As a result, the processes of fabrication also tend to be different. Many of the fabrication processes can take the raw material to a finished product in a single operation. Large, complex shapes can be formed as a single unit, often eliminating the need for multipart assembly. Joining and fastening operations are quite different from those used on metals. Color, surface finish and precision can often be obtained directly, eliminating the need for surface finishing.

2. Thermoplastic polymers can be heated to a temperature at or near the melting temperature so that the material becomes either a formable solid or a liquid. The polymer can than be cast, injected into a mold, or forced through a die to produce the desired shape. With thermosetting polymers, once the polymerization has occurred, no further deformation can occur. Thus, the polymerization reaction and the shape-forming process must be accomplished simultaneously.

3. Plastic sheets and plates can be cast between plates of glass. Continuous product can be made by introducing the liquid polymer between moving belts of stainless steel, or into the gap of a rolling mill setup. Tubular products can be made by spinning the liquid against the walls of a rotating mold.

4. Cast plastics generally contain no filler, so they present a distinct lustrous appearance.

5. Blow molding is a process that is used to shape thermoplastic polymers into bottles or other hollow-shape containers. Common thermoplastics for this process include: polyethylene, polyvinyl chloride, polypropylene, and PEEK.

6. In blow molding (and in injection molding) the parts have to harden in the mold before they can be removed from the mold. While parts are hardening the machine cannot be used for forming more parts, it is unproductive time. The part hardening phase of blow molding cycles can be reduced, and production rates increased, by building cooling systems into the molding machine.

7. Compression molding is most economical when it is applied to small production runs requiring close tolerances, high impact strength, and low mold shrinkage. Most products have relatively simple shapes because the flow is rather limited. Parts should not contain regions with thick section because of the long curing times.

8. Mold temperatures for compression molding typically run between 300 and 400^{o}F, but can go as high as 1200^{o}F. They are generally made of tool steel and are polished or chrome plated to improve material flow and product quality.

9. Thin sections, excellent detail, and good tolerances and finish are all characteristic of the transfer molding process. In addition, inserts can be incorporated into the product as the liquid resin is introduced at relatively low pressure.

10. Injection molding is used to produce more thermoplastic products than any other process.

11. Injection molding of thermoplastic polymer is very similar to die casting of metal. Sprues and runners channel molted material to the various closed-die cavities where the material solidifies after mold filling. Injection pressures provide rapid filling and prevent premature solidification. The die segments then separate for easy part ejection.

12. By using a hot runner distribution system, the thermoplastic material is kept in a liquid state until it reaches the gate. The material in the runner does not solidify and can be used in the subsequent shot, thereby reducing the amount of scrap and the amount of material that must be heated for each shot (or product). In addition, quality is improved due to the uniformity of temperature and the absence of recycled material in the melt.

13. The typical molding cycle in the injection molding of thermoplastics takes from 1 to 30 seconds and is very similar to the die casting of molten metal. Because thermosetting plastics must be held at elevated temperatures and pressures for sufficient time to permit curing, the cycle time for the injection molding of these materials in significantly longer than for thermoplastics.

14. In reaction injection molding metered amounts of the materials to be mixed are formed into two high pressure streams. The streams interact in the mixing head of the machine, out side the mold.

15. Since the reaction injection molding is a low temperature, low pressure process the process and the machine have attractive characteristics. In the process itself the solidification time is determined by the curing time of the blend and may be short. This is in contract to processes that use heated polymers such as injection molding. In injection molding solidification time is determined by the time required to remove heat from the heated melt. Depending on the extent of cooling of the mold injection molding cycle times may be long.

The machine and tooling for reaction injection molding can be simpler than for high temperature, high pressure process. Since no heating is required, no heating system in needed in the molding machine. Low pressure means that molds need not be as strong and stiff as molds in high pressure processes. Low temperature and low pressure result in less mold wear than in high temperature, high pressure processes and so mold material requirements are less stringent and less expensive molds may be possible.

16. Plastic products with long, uniform cross sections are readily produced by the extrusion process. Common production shapes include solid forms, tubes, pipes, and even

coated wires and cables. If the emerging tube is blown up by air pressure, allowed to cool, and then rolled, the product can be a double layer of sheet film

17. Twin-screw extruders have advantages associated with the materials that can be extruded and the mixing and heating of the materials. The screws in twin-screw machines enable the extrusion of complex plastics. Since the flow pattern of the plastic is more complex than with single-screw machines better mixing occurs. The greater extent of mixing means that there is more shear heating of the plastic/melt. Shear heating, unless extreme enough to cause high temperatures and plastic degradation, can be an important heat source for melting the feedstock in addition to the heaters built into the extruder.

18. Thermoforming is a process designed to shape thermoplastic sheet material into a uniform-thickness shaped products, similar to those produced by embossing of metal sheet.

19. Rotational molding is used to produce hollow, seamless products of a wide variety of shapes and sizes. These include storage tanks, refuse containers, footballs, helmets, and even boat hulls.

20. Open-cell foams have interconnected bubbles that permit the permeability of gas or liquid. Closed-cell foams have the property of being gas- or liquid-tight.

21. Rigid-type foams plastics are used for structural application, for packaging and shipping containers, as patterns for the full-mold casting process, and for providing rigidity to thin-skinned metal products.

22. In spinning thermoplastic material filaments are formed and several filaments can be spun into twists and wraps similar to cables. Products can be the spun material as it comes out of the machine, e.g., plastic string. Another kind of product is woven twists that resemble cloth.

23. Since plastics are poor thermal conductors, little of the heat that results from chip formation will be conducted away through the material or be carried away in the chips. Consequently, the cutting tools run very hot and may fail more rapidly than when cutting metal. In addition, the high temperature at the point of cutting can cause thermoplastics to soften and swell, possibly binding or clogging the cutting tool.

24. Since bending and recovery of tabs is necessary for effective snap fits material properties related to strength, stiffness and elastic limit are important. Plastics have relatively low values of modulus of elasticity and so small forces are needed to deform the mating sections during assembly of snap fits. While not unusually high the yield strain of plastics is large enough so that mating sections of snap fits will not be permanently deformed during assembly of adequately designed snap fits.

25. Plastics offer designers a number of unique material properties, including light weight, corrosion resistance, good thermal and electrical insulation, and the possibility of

integral color. Some of the design limitations of plastics include" the inability to perform at elevated temperature of operation, poor dimensional stability, and the deterioration of properties with age.

26. Adequate fillets between the adjacent sections of a mold ensure smooth flow of plastic into all section of the mold and also eliminate stress concentrations at sharp interior corners. These fillets also make the mold less expensive to produce and lessen the danger of mold breakage. Rounding exterior edges will act to reduce the possibility of chipping.

27. Uniform wall thickness is desirable in plastic products for several reasons. Since the curing time is determined by the thickest section, it can be optimized for the product if the sections are uniform. In addition, nonuniform wall thickness can lead to serious warpage and dimensional control problems.

28. Dimensions parallel to the parting line are contained entirely within a given section of the mold and can possess good dimensional precision. Larger tolerances are required for dimensions which cross the parting line for they can vary with the fit of the die segments, wear of the dies, and the thickness of any flash that forms.

29. Threaded metal inserts are frequently molded into plastic products because of the difficulty of molding threads in plastic parts and the fact cut threads tend to chip. The inserts provide strength and allow frequent assembly and disassembly.

30. Metal inserts are placed in plastic parts either by forcing the insert into a molded cavity or by molding around the insert. The inserts are held in place by mechanical interactions, not chemical bonding, between the insert and surrounding material. Insert function can be lost if the inserts pull out or rotate. To aid in resisting forces acting along and insert and torques acting to twist the insert inserts are bent, split along their length notched, swaged or formed to produce protrusions and noncircular heads, grooved and knurled, Figure 20-12.

31. Since the mold is the reverse of the product, depressed letters or designs would require these features to be raised above the mold. This would require the entire remainder of the mold to be cut away at a considerable expense. If the details were raised, only these details would have to be machined.

32.A parting line problem is the appearance of the part if flashing occurs during molding and the flash at the parting line has to be removed. Locating the parting line at a sharp corner means that any operation needed to remove possible flash will be performed at an edge, not on a flat surface. Any surface appearance effects of flash removal will be less apparent.

33. Countersinking holes that are to be threaded has two intents.
i. The countersink can aid in locating and starting the tapping or screw insertion operations.

ii. If any damage results from tapping or screw insertion it will be in the countersink and so not visible.

34. Dipping can be used to produce relatively thin elastomeric products with uniform wall thickness, such as boots, gloves, and fairings.

35.Rubber sheets are usually made in calendering processes. Rubber is fed into the gap between two closely spaced rolls. Roll rotation draws the rubber feedstock into the gap forming a sheet of uniform, specified thickness. The rubber sheet leaving the calendering roll gap may be laid onto substrate such as woven fabric.

Dipping of rubber is usually the build up thin layers over a form or mold to produce a shaped product. Dipping using plate is not done to form rubber sheets.

36. Ceramic materials generally fall into two distinct classes, glasses and crystalline ceramics. The glasses are fabricated into useful products by forming a viscous liquid and then cooling it to produce a solid. The crystalline ceramics are fabricated by pressing moist aggregates of powder to a desired shape, followed by drying and bonding by chemical reaction, vitrification or sintering.

37. By rapidly cooling the surfaces of hot glass, a residual stress pattern of surface compression can be induced. The resulting glass is stringer and more fracture resistant. Annealing operations can be used to relieve unfavorable residual stresses when they exist, and heating can also be used to promote devitrification – the precipitation of a crystalline phase from within the glass.

38. Glass ceramics are amorphous, glassy, ceramics that contain regions of ordered, crystalline, structure. A glass ceramic is produced and then subjected to heat treatment to initial and control the formation and growth of crystalline regions.

39. Plasticity can be imparted to the crystalline ceramics in a number of ways. Clay products can be blended with water and various additives to permit shaping. Plastic forming involves the blending of various ceramics with additives to make the mixture formable under pressure and heat. The additive material is subsequently removed by controlled heating before the fusion of the remaining ceramic.

40. In injection molding of plastics
- a one component material, the plastic,
- is heated to a relatively high temperature,
- injected under high pressure into a mold,
- let solidify
- and ejected as a final part.

In injection molding of ceramics
- a two material feedstock is used, ceramic powder and a binder,
- the material is injected at relatively low temperature and pressure,

- after removal from the mold thermal, solvent, catalytic or wicking operation is needed to remove the binder,
- the part is fired to produce final strength and density.

41. Firing or sintering operations provide useful strength to ceramic materials by driving the diffusion processes that are necessary to form bonds between the individual particles. In some cases surface melting or component reactions produce a liquid component that flows to produce a glassy bond.

42. While machining before firing enables the cutting of weaker material, there is usually a greater concern for the dimensional changes that will occur during firing. Therefore, machining performed before firing id usually rough machining designed to reduce the amount of finish machining to be performed after firing establishes both the final properties and dimensions. In both cases, caution should be exercised relating to the handling of brittle materials that will fail by fracture.

43. Since the brittle ceramics cannot be joined by fusion welding or deformation bonding. and threaded assemblies should be avoided because of the brittleness of the material , ceramics are usually joined by some form of adhesive-type bonding. Even here, however, the residual stresses can lead to premature failure of the brittle material. As a result, it is best if ceramic products can be produces as a single piece (monolithic) structures.

44. The overriding characteristic that influences the design of ceramic parts is the brittleness of ceramics. Ceramic part design guidelines emphasize avoiding situations in which cracks are initiated and stresses cause cracks to grow. For example, ceramic parts should be designed so
- tensile and bending stresses (which give rise to tensile stress) are minimized,
- stress raisers due to part shape changes should be minimized so large abrupt changes in section should be avoided,
- sharp corners and edges should be avoided since they are stress raisers,
- corners should be rounded to avoid stress raisers and chipping and crack formation at outside corners,
- secondary or finishing operations are minimized since these operations are difficult and expensive for hard, strong materials such as ceramics,
    - --- features that are difficult to produce in the initial ceramic part production process should be avoided as this will result in additional processing,
    - --- dimensional tolerances should be as large as possible so it may be possible to meet them in the as-fired ceramic part with no secondary processing,
    - --- surface finish specifications should be as loose as possible so it may be possible to meet them in the as-fired ceramic part with no secondary processing.

45.Since particulate composites are composed of discrete, stable solid particles dispersed in a matrix material there is no need for special processes to produce a different kind of structure such as a solution or compound. Processes used to combine other materials and bond different materials into a composite, e.g., mixing, compaction and sintering of powder metal composites, are useful for forming particulate composites.

46. A quality bond can be formed between the distinct layers of a composite through such processes as: roll bonding, explosive bonding, and the various lamination techniques (adhesive bonding, brazing, etc.).

47. Fiber-reinforced composites use the strength of the fibers to impart additional strength to the fiber-matrix whole. The use of fibers means that added strength will be in the fiber length direction. The commonly used fiber forms are
- long, continuous fibers are their use results in increased strength in the fiber length direction,
- fibers woven into fabric layers used in thin sheet composites and they add strength in the two in-plane fiber directions,
- woven fabrics of fibers formed in three dimensions so that when embedded in the matrix strength in three dimensions is increased,
- short, chopped fibers that can be oriented in a particular direction or randomly.

48. Prepregs are segments of woven fabric produced from the fibers, which is then infiltrated with the matrix material. Subsequent fabrication involves stacking the prepreg layers and subjecting them to heat and pressure to complete the cure of the resin. Answer for question.

49. Sheet molding compounds are sheets composed of chopped fibers and resin, the sheets being about 0.1 inch in thickness. These can be press-formed in heated dies to provide an alternative to sheet metal where light weight, corrosion resistance and integral color are desired. Bulk-molding compounds are fiber-reinforced thermoset molding materials containing short fibers in random orientation. They are formed into products using processes like compression molding, transfer molding or injection molding.

50. In pultrusion, bundles of continuos reinforcing fibers are drawn through a resin bath and then through a preformer to produce a desired cross-sectional shape. The material is then pulled through a series of heated dies which further shapes the product and cures the resin. Like wire drawing and extrusion, the product is a long length of uniform cross-section.

51. Filament winding is used to produce hollow, container-like shapes with high strength-to-weight ratio. Small quantities of large parts can often be economically made by the filament winding process. The special tooling for a new product (a new form block) is relatively inexpensive. By making these products as a single piece, additional savings can be obtained through reduction in: labor, total manufacturing time, assembly, and tooling costs.

52. Laminated sheets containing woven fibers can be formed to produce the curves required for products, such as boats, automobile panels, and safety helmets. This fabrication is generally performed by processes, such as vacuum-bag molding or pressure-bag molding. Alternative methods include compression molding, resin-transfer molding, and hand layup.

53. Spray molding utilized chopped fibers mixed with a catalyzed resin. The starting material for sheet stamping is a thermoplastic sheet reinforced with woven fibers. Both chopped and continuous fibers can be used in injection molding using several techniques.

54. Spray molding uses chopped fibers that are mixed with a catalyzed resin.

55. There a number of ways to produce fiber-reinforced, metal-matrix composites. Variations of filament winding, extrusion, and pultrusion have been developed. Sheet materials can be made by electroplating, plasma spraying or vapor deposition onto a fabric or mesh that is then shaped and bonded. Diffusion bonding of foil and fabric sandwiches, roll bonding, and coextrusion are other options. Liquid metal can be cast around fibers through capillary action, pressure casting and vacuum infiltration. Discontinuous fiber products can be made by powder metallurgy techniques or spray forming.

56. In ceramic matrix composites, the matrix is a brittle material and failure occurs by fracture. A primary purpose of the "reinforcement" is often to impart toughness rather than strength. One means of imparting toughness is to prevent (or interrupt) the propagation of cracks across the matrix. By designing weak interfaces, propagating cracks are diverted along the interface, rather than crossing it and continuing their propagation.

57. Fiber reinforced composites are cut using conventional machining processes such as sawing, drilling, routing, tapping, turning and milling. There are problems unique to the cutting of fiber reinforced composites.

Cutting fiber reinforced composites involves cutting through the fibers, the matrix and the fiber-matrix interface regions. Moving a cutting edge through this complex material causes separation of the individual composite material components and the possible separation of the components, e.g., cutting of fibers and separation of the fiber from the matrix. Separation of the material components can result in cracking, splintering, fraying and delamination. To minimize such problems deformation and material separation should be confined to very small regions and so tool sharpness is important. High cutting speeds also help.

The fiber or matrix or the interface material in fiber reinforced composites may be abrasive and call for the use of hard, strong cutting tool materials such as polycrystalline diamond.

Fundamentally different material cutting techniques can be used to cut fiber reinforced composites to circumvent some of the problems associated with conventional machining processes. Water-jet, abrasive water-jet and laser machining can be used.

58. When fiber-reinforced materials must be joined, the major concern is a lack of continuity of the fibers in the joint area. The thermoplastic resins can be welded. Thermoset materials require the use of mechanical joints and adhesives.

Problems:

1. There are a number of possibilities here including the aligning of fibers in the shafts of golf clubs (pultruded or extruded), the laminates of woven sheets in skis, the various sheet type products in racing car bodies, and the continuous fiber reinforcements included in both the frame and handle regions of tennis racquets. Advances are continually being made in both the materials and processes, and sporting goods is one of the most active and competitive markets for the employment of composite materials.

Case Study:

Fabrication of Lavatory Wash Basins

CHAPTER 21

Review Questions

1. The deformation zone in which the chip is produced is not completely bounded. In contrast to drawing for example where the workpiece is deformed in the die, in metal cutting the workpiece has free surfaces. In lathe turning there are free surfaces at the workpiece diameter and on the top of the forming chip. And, the boundaries that do exist (the tool-chip interface and the not well-defined deformation zone boundary in the work material) are difficult to characterize.

Further complications of the process are that the strains are very large and the strain rate is very high. Material properties at such conditions are not typically known. There are also a large number of process variables.

Theoretical solutions or process models have to be validated experimentally. It is difficult to obtain reliable, consistent experimental results that quantitatively describe the local deformation in the chip formation zone. The chip formation zone extends into the workpiece below what will become the finished surface.

2. The input parameters or independent variables for the process include the cutting speed, feed, depth of cut, the cutting tool geometry, cutting tool material and the cutting fluid.

The input parameters determine the process outputs or dependent variables and process performance. e.g.,. material removal rate, machining time, tool wear, finished surface roughness, surface integrity (finished surface and subsurface deformation state), cutting zone temperature, cutting forces, chip formation and machine tool dynamics.

Other process variables may be constrained so as to be not completely defines or fixed. There may or may not be complete control over such process characteristics such as the work material, machine tool, workholding device.

3. Single point:
turning, facing, boring, shaping, planing, fly cutter milling, some modes of deep hole drilling and other variations of lathe operations such as cutoff, recessing plunge or form turning.

The rest of the machining processes are multiple point and include drilling, milling, broaching, sawing, filing and many forms of abrasive machining.

4. In turning the feed rate is the speed of the cutting tool along the workpiece longitudinal direction. If the lathe carriage is driven independently of the spindle (inch/minute or mm/min) there is no necessary relation between feed speed and cutting speed. There are the practical considerations of cutting forces, machine vibration, etc. In many lathes one motor drives both the spindle and the carriage. The carriage is usually driven through a gearbox and so feed rate is in inches or millimeters per revolution of the spindle. In this case the linear feed speed and the feed rate in units of distance/revolution are related as

feed rate (in/min or mm/min) = N_s (rev/min) f_r (in/rev or mm/rev)
$f = N_s f_r$

In contrast to the linked spindle speed-feed rate lathe turning operation, in other machining operations there may be no relationship between cutting speed and feed rate.

For example in end milling the spindle and table are driven independently. If the feed rate is the table speed past the spindle, v, it is set by the table feed motor-drive system. The spindle is driven by the spindle motor and the cutting speed, V, is the speed of the cutting edge through the workpiece. For spindle rotational speed N rpm the cutting speed at the cutter periphery is

$V = (N) (\text{cutter circumference}) = N \pi (\text{cutter diameter})$
$V = N (\text{rev/min}) \pi d (\text{in or mm})$

The description of the amount of material being removed is usually given by the advance of an individual cutting edge into the workpiece in one revolution of the cutter. This is the bite per tooth or the chip load. Bite/tooth is dependent on both spindle speed and table speed. For a cutter with A flutes or cutting edges, the bite/tooth, B, is

$B = \text{advance of one cutting edge per revolution of the cutter}$
$B = \{ (v \text{ in/min or mm/min}) (\text{time for one cutter revolution}) \} / (\text{edges / revolution})$
$B = (v \text{ in/min or mm/min}) (1 / N \text{ rev/min}) (1 / A \text{ teeth/rev})$

In some machining processes the feed rate is set by the tool, in broaching the feed is built into the tool, rise per tooth as shown in Figure 26-6. Feed will be the same regardless of cutting speed.

There may be only indirect influences between feed and cutting speed in machining operations. In power sawing using a horizontal saw such as shown in Figure 26-17 and Figure 26-12 it may be that the saw in acted on only by gravity, that is, the vertical force is not controlled or the mechanism controlling this force is inactive. The net downward force will be due to gravity and the cutting forces acting. If the cutting forces change with cutting speed the net downward force will change and so the feed rate changes. In sawing soft materials or materials with definite anisotropic structure with a high tooth rake angle saw the cutting action may pull the saw down into the work.

5. The machine motion related to feed in milling is the table speed or table feed and combined with the spindle speed gives the feed per tooth or bite per tooth as explained in 4 immediately above.

So, the two feeds in milling are the table feed (in/min, mm/min) and the feed per tooth (in/tooth, mm/tooth). The table feed is the direct input to the machine. Spindle speed is a machine input that is used to set the cutting speed.

6. A shear-front lamella structure is developed by very narrow shear fronts which segment the chip material into very narrow lamellae. The mechanism is developed out of the compression deformation which precedes the shear. If the material is already cold worked, very little additional compression deformation is needed to activate the shear

process. If the material is annealed (or as-cast), the compression deformation is extensive, causing the workpiece to bulge and upset prior to shearing. The shear fronts have micron-spaced periodicity and are the result of many dislocations moving at the same time. The onset of shear begins at the shear plane (defined by ϕ) and moves at the angle φ to form the chip. This process is microscopic and not visible to the naked eye, except in very special circumstances. The primary dislocation mechanism appears to be one of dislocation pileups against the cell structure produced by compression deformation or prior work hardening of the workpiece material.

7. The metalcutting process has been labeled as an adiabatic shear instability, meaning that heat input and heat dissipated are balanced, or that there is excess heat which results in softening (lowering the strength of the material) so that the shear instability can take place. However, the metalcutting observed in Figure 21-12 is taking place at such low speeds, that such a mechanism appears to be unlikely. At faster cutting speeds, adiabatic shear may be responsible for the large saw-tooth structures seen in chips as the elastic energy is rapidly dissipated over the shear front.

8. In orthogonal cutting the cutting speed direction and cutting edge are perpendicular to each other. This is not the case in oblique cutting.

Oblique cutting is what is typically done in machining processes, with the exception of experimental setups designed to eliminate one cutting force, thus converting oblique (3 forces) cutting to orthogonal (2 force) cutting. The exceptions to this in industrial practice are broaching and slab milling with a straight tooth cutter. Orthogonal machining can be converted to oblique machining simply by canting the cutting edge with respect to the direction of motion of the tool.

9. The approximate equation for turning is (21-4):

$$MRR = 12\ V\ f_r\ d$$

base on the assumption that the depth of cut d is small compared to the workpiece diameter, D_1.

The exact equation for turning is:

$$MRR = \text{volume removed} / \text{time}$$

$$MRR = \{ (\pi D_1^2 - \pi D_1^2) L \} / \{ 4 L / f_r N \}$$

$$N = 12\ V / \pi D_1$$

$$MRR = 12\ V\ fr (D_1^2 - D_2^2) / 4\ D1$$

10. The mechanics of the chip formation process can become quite complicated when a radius is used rather than an edge. Almost all of the analysis work in metalcutting assumes a zero radius cutting edge.

11. The magnitude of the strain and strain rates are very large for metal cutting compared to tensile testing. Metal cutting strain is on the order of 1 to 2 compared to tensile testing's 0.20 to 0.40 and metal cutting strain rates are 10^5 to 10^9 in/in/sec compared to tensile testing's 10^{-2}.

12. Titanium is very strain rate sensitive. The faster it is deformed, the stronger it behaves. This causes problems because of the high strain rates in metal cutting.

13. Cast iron has a structure that is filled with flake graphite. These flakes produce regions that act like sharp-cornered flaws or voids which concentrate the compression stresses. The shear fronts cannot cross these regions. Under the large strains, the metal fractures through the flake and the chips come out segmented or in fractures chunks.

14. In metal cutting shear stress is a material constant. This means that it is not sensitive to changes in cutting parameters or cutting process variations. Once this value is known for a metal, it can be used in basic engineering calculations for machining statics (forces and deflections) and dynamics (vibrations and chatter).

15. The primary or largest force is always the cutting force, F_c which is in the direction of the cutting speed vector, V. The cutting speed is much larger than the feed speed and the radial speed.

16. The energy F_cV is divided into shear (actually compression and shear) to form the chips (about 75%) and secondary shear and sliding friction at the tool/chip interface.

17. The energy that produces plastic deformation does so through the production of dislocations, which multiply and move. The energy in the dislocations is returned to the metal as heat when the dislocation absorb each other (annihilate). In short, energy is converted to heat. Only a very small portion of the input energy is stored in changes in metallic structure.

18. F_c can be estimated from:
   a) the unit power, eqn (21-12)
) the specific energy, eqn (21-15)
   b) the shear stress, eqn (21-30) with an estimate for F_t
      usually Ft is estimated at F_c / 2

19. The rate of wear (on both the flank and the rake face) of the tool is most directly influenced by cutting speed. The higher the cutting speed, the shorter the life of the tool. This is because increasing V directly drives up the temperature, and increasing the temperature of a tool rapidly increases wear rates.

Question 17 is concerned with the heat generated in machining. The power dissipated in machining is FV (the sum of the products of all cutting forces and corresponding velocities) and so increasing V increases power, increasing heat generation and increasing tool temperature.

Tool wear is discussed in Sections 22.5, 22.6.

20. As temperature goes up, the hardness (resistance to penetration) decreases. See Figure 22-3.

21. The case of constant cutting force with increasing cutting speed, Figure 21-11, can be due to either
- cutting speed has no effect on the machining process and on work material behavior/properties,
- or that the effects of cutting speed increase on the process and/or material offset each other to produce no net effect.

Specifying the effect of cutting speed, V, on cutting force, F_c, can be approached from two starting points.
i. The power for machining as described in Section 21.3 can be used.
Using the definition of power $P = F_c V$,
and the machining process model $P = HPs\ MRR$ relating power and unit power and material removal rate gives

$F_c = P / V = HPs\ MRR / V$

$MRR = V fr\ d$ with fr being feed advance d the depth of cut

then

$F_c = HPs\ fr\ d$

Feed advance and depth of cut do not depend on cutting speed. This implies that that for constant F_c, HP_s does not depend on cutting speed. That is, unit power is constant with increasing cutting speed.

However, more careful consideration of the unit power may lead to a different conclusion. If unit power is determined by work material properties and chip formation process mechanics then a balance of competing effects may result in constant unit power. For example, if
- work material shear strength increases with cutting speed (the strength of many materials increases with strain rate)
- and the amount of deformation to form the chip decreases with increasing cutting speed due to formation of a smaller shear zone,
- and work material strength decreases with increasing cutting speed due to increased temperature in the shear zone,

perhaps these effects will combine to produce a constant value of unit energy. In reality a more realistic statement is that they combine to produce a small enough change in unit energy so that cutting force appears to be constant.

ii. The force model of machining can be used to add more detail to explaining constant cutting force in terms of process and material interactions.

The process model, force system is shown in Figure 21-20.
From Figure 21-20

$F_c = R \cos(\beta - \alpha)$

again from Figure 21-20 $F_s = R \cos (\beta - \alpha + \phi)$

or $R = F_s / \cos (\beta - \alpha + \phi)$

now known material behavior is introduced by putting shear force in terms of shear strength

$F_s = \tau\ As$

$$A_s = t\, w / \sin \phi$$

$$F_s = \tau\, t\, w / \sin \phi$$

$$R = (\tau\, t\, w) / \{ \sin \phi \cos (\beta - \alpha + \phi) \}$$

and finally

$$F_c = \{ \tau\, t\, w \cos(\beta - \alpha) \} / \{ \sin \phi \cos (\beta - \alpha + \phi) \}$$

If cutting force is to remain constant then all terms on the right hand side of the equation should not change with cutting speed or the effects of changing process and material parameter values have to compensate, i.e., cancel each other.

The width of cut, *w*, the depth of cut or uncut chip thickness, *t*, and the tool rake angle, α do not change with cutting speed. The changes with cutting speed of the remaining parameters, τ, β, ϕ, are not so clear-cut.

It seems reasonable as a first approximation to assume that the work-tool coefficient of friction is constant and so the friction angle β = constant. The shear angle ϕ is given in the Merchant chip formation model by

$$\phi = 45^o + \alpha / 2 - \beta / 2$$

and the shear angler does not depend on cutting speed for constant friction coefficient.

The revised description of shear angle in Section 21.7 is

$$\phi = 45^o + \alpha / 2 - \psi$$

with ψ dependent on material hardness.

So, what is left is the explanation that cutting force is constant with increasing cutting speed since the work material shear strength, τ, is constant with increasing cutting speed. The argument that increase in τ with increasing strain rate is balanced by decrease in τ with increasing temperature as cutting speed increases leads to the conclusion that cutting force remains constant with increasing cutting speed.

(An Aside: The development of the initial Merchant model of chip formation was based on the independence of friction and shear strength from shear angle. Subsequent models developed by Merchant and others explicitly included consideration of the work material strength.)

22. In overview, the cutting force increases with increasing feed or depth of cut since the amount of material being removed increases.

The same cutting force equation as immediately above can be used and the argument is

$$F_c = \{ \tau\, t\, w \cos(\beta - \alpha) \} / \{ \sin \phi \cos (\beta - \alpha + \phi) \}$$

and if *t* and/or *w* increases, F_c increases.

Problems:

1. Excel spreadsheet solution

shear angle $\phi = \tan^{-1} \{ r_c \cos \alpha / (1 - r_c \sin \alpha) \}$

shear stress $\tau_s = F_s / A_s$

$F_s = F_c \cos \phi - F_t \sin \phi$

$A_s = t\, w / \sin \phi$

coefficient of friction $\mu = F / N$

$F = F_c \sin \alpha + F_t \cos \alpha$

$N = F_c \sin \alpha - F_t \cos \alpha$

In the orthogonal metal cutting model the only nonzero velocity is the cutting velocity and so the only power is (cutting force)(cutting velocity)

HP_s = Power / Material Removal Rate

HP_s = = { (F_c lb) (V ft/min) (12 in/ft) } / { (t in) (w in) (V ft/min) (12 in/ft)

HP_s = { F_c / $t\,w$ inlb/min / in^3/min }{ hp / 396,000 inlb/min }

HP_s = F_c / $t\,w$ hp/ in^3/min

	w	0.2	in												
	alpha	0	deg												
	V	530	sfpm												
Run	F_c (lb)	F_t (lb)	Feed (ipr)	r_c		**phi (deg)**		F_s (lb)	A_s (in^2)	**tau (psi)**		F (lb)	N (lb)	**mu**	**HP_s**
1	330	295	0.00489	0.331		**18.3**		221	0.00311	**70874**		295	330	**0.89**	**0.85**
2	308	280	0.00489	0.381		**20.8**		188	0.00275	**68487**		280	308	**0.91**	**0.80**
3	410	330	0.00735	0.426		**23.0**		248	0.00375	**66084**		330	410	**0.80**	**0.70**
4	420	340	0.00735	0.426		**23.0**		253	0.00375	**67492**		340	420	**0.81**	**0.72**
5	510	350	0.00981	0.458		**24.5**		318	0.00471	**67478**		350	510	**0.69**	**0.66**
6	540	395	0.00981	0.453		**24.3**		329	0.00475	**69171**		395	540	**0.73**	**0.70**

Figure 21-21 shows shear stress for annealed 1018 steel = 75,000 psi

- this is close to the results of the calculations for 1020 steel
  - while it is not definite, sometimes it is said that the effects of increasing work strength with strain rate are offset by decreasing strength due to increasing

temperature and the room temperature shear strength of the work can be used for approximate calculations of machining variables.

The calculated unit power values of about 0.7 – 0.8 hp/in3/min seem lower than the values in Table 21-3. This is probably due to the simplifications in the orthogonal model of chip formation.

In actual machining there is a feed direction velocity that when multiplied by the feed direction force gives a power dissipation. Calculation of this power with typical values will show that it is negligible with respect to the cutting force power.

2. rc = t / tc

weight density = ρ = weight / volume = Wt / (l_c w_c t_c)
with l_c = chip length, w_c = chip width, t_c = chip thickness
t_c = Wt / (l_c w_c ρ)

rc = t Wt / (l_c w_c ρ)

Know Wt, l_c, ρ

t is the uncut chip thickness in the orthogonal model and is the feed in conventional turning and should be known since a machining process was run to obtain the chip.

w_c is the chip width and in the orthogonal cutting model is the width of workpiece and is constant since two-dimensional deformation is a basis for the model. In conventional turning the deformation is often close to plane strain and then the chip width is the depth of cut.

3. $U_s = F_s V_s$ / Material Removal Rate
$= F_s V_s / (V t w)$

$F_s = F_c \cos \phi - F_t \sin \phi$
$V_s = V \{ \cos \alpha / \cos(\phi - \alpha\}$
V = cutting speed
t = uncut chip thickness = feed advance per revolution
w = width of cut

$U_f = F V_c$ / Material Removal Rate
$= F V_c / (V t w)$

$F = F_s = F_c \sin \alpha + F_t \cos \alpha$
$V_c = V r_c$

	w	0.2	in									
	alpha	0	deg									
	V	530	sfpm									
Run	F_c (lb)	F_t (lb)	Feed (ipr)	r_c		phi (deg)	F_s (lb)	V_s (ipm)	**Us (inlb/in^3)**	F (lb)	V_c (ipm)	**U_f (inlb/in^3)**
1	330	295	0.00489	0.331		18.3	220.6	6699	**237582**	295	2105	**99842**
2	308	280	0.00489	0.381		20.8	188.1	6806	**205849**	280	2423	**109080**
3	410	330	0.00735	0.426		23.0	247.9	6913	**183279**	330	2709	**95633**
4	420	340	0.00735	0.426		23.0	253.1	6913	**187184**	340	2709	**98531**
5	510	350	0.00981	0.458		24.5	317.9	6995	**178236**	350	2913	**81702**
6	540	395	0.00981	0.453		24.3	328.9	6982	**184029**	395	2881	**91200**

4.

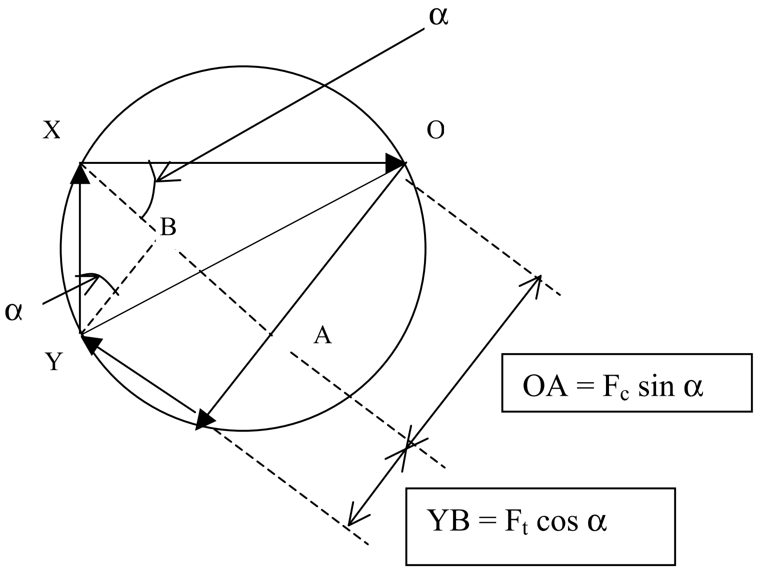

5.

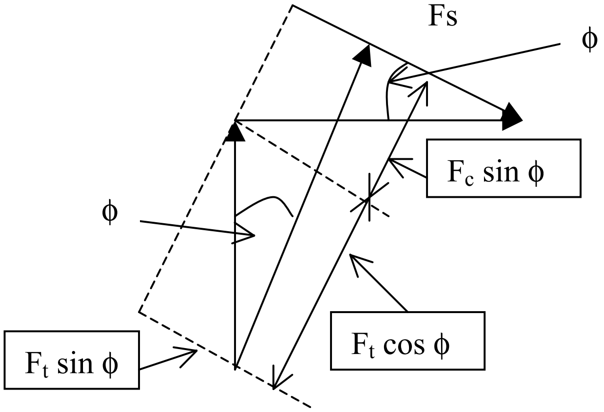

6. shear strain = $\gamma = \cos\alpha / (1 + \sin\alpha)$

	w	0.2	in				
	alpha	0	deg				
	V	530	sfpm				
Run	F_c (lb)	F_t (lb)	Feed (ipr)	r_c		**shear strain**	**1 / rc**
1	330	295	0.00489	0.331		**2.00**	**3.02**
2	308	280	0.00489	0.381		**2.00**	**2.62**
3	410	330	0.00735	0.426		**2.00**	**2.35**
4	420	340	0.00735	0.426		**2.00**	**2.35**
5	510	350	0.00981	0.458		**2.00**	**2.18**
6	540	395	0.00981	0.453		**2.00**	**2.21**

The inverse of the chip thickness ratio 1 / rc = tc / t decreases with increasing feed rate. This indicates that the chip is relatively less deformed, i.e., the chip thickness goes from about three times the uncut chip thickness to about twice the uncut chip thickness. Given the change in deformation, the constant value of shear strain is surprising.

7 With cutting conditions known (except for cutter rake angle) and a chip formation mechanics model available, what remains to be obtained is material property values. The candidate sources of material behavior are material strength and the unit machining power for the particular work material.

The rake angle is presumably known as it is measurable. For a strong tough material a low rake angle, and so strong, tool is probably used, say $\alpha = 0^o$. (Lacking specific information, one way to proceed is to consider several realistic possibilities, i.e., a range of rake angle values. However, using the force data provided that is for one case with different rake angles implies that cutting force is independent of rake angle. This is not the case.)

i. eqn (21-30) gives

$F_c = \{ \tau_s\, t\, w + F_t \sin 2\phi \} / \{ \sin\phi \cos\phi \}$

given $F_t = F_c / 2$

$F_c = (\tau_s\, t\, w) / (\sin\phi \cos\phi - \tfrac{1}{2} \sin 2\phi)$

$\phi = \tan^{-1} \{ r_c \cos\alpha / (1 - r_c \sin\alpha) \}$

$r_c = t / t_c = 0.020$ in / 0.080 in = 0.25

$\phi = 14^o$

Figure 21-21 shows τ_s for Inconel 600 to be 105,000 lb/in^2

$t = 0.020$ in

$w = 0.25$ in

$F_c = 2555$ lb

An alternative problem solution is to use tabulated values of unit machining power such as Table 21-3.

For Iconel 700, HP = 1.4 hp/(in^3/min)

Power = F V

in turning $P = F_c V + F_t V_{feed} + F_r V_r$

in turning a straight shaft the radial velocity $V_r = 0$

the feed direction force Ft is given as Ft / 2 but this component of power will not be included since tool velocity in the feed direction is small compared to the cutting speed.

e.g., even at 1000 rpm spindle speed

V_{feed} = (1000 rev/min)(0.020 in/rev) = 20 in/min = 1.7 fpm

Power = F_c V

P = F_c V = HPs (Material Removal Rate)

Fc = P / V

MRR = V f d = (250 ft/min)(0.020 in)(0.250 in)(12 in/ft)

MRR = 15 in3/min

P = { 1.4 hp/(in^3/min) } { 15 in^3/min } = 21 hp

V = 250 ft/min = 3,000 in/min

Fc = { 21 hp / 3,000 in/min }{ 396,000 (inlb/min) / hp } = 2,772 lb

8. For rough machining typical ranges of cutting conditions are:

Cutting speed, 200 sfpm to 800 sfpm

Feed rate, 0.010 ipr to 0.085 ipr

Depth of cut, 0.125 in to 0.675 in

MRR = 12 V f d

MRR_{min} = 12 (200 ft/min) (0.010 in) (0.125 in) = 3 in^3/min

MRR_{max} = 12 (800) (0.085) (0.675) = 550 in^3/min

For finishing

MRR_{min} = 12 (700 ft/min) (0.005 in) (0.0125) = 0.525 in^3/min

MRR_{max} = 12 (1600) (0.015) (0.0675) = 19.44 in^3/min

9. HP = Fc V ftlb/min/ 33,000 ftlb/min/hp

V can be obtained from the MRR

MRR = 12 V fr d = 550 in3/min

V = 550 in^3/min { (12) (.005 in) (0.675 in)

V = 13,580 ft/min

HP = (10,000 lb) (13,500 ft/min) / 33,000 ftlb/min/hp

$HP = 4090$ hp

The 4000 hp value calls for investigation of this unreasonable number. Although the cutting speed seems high it might be possible. The difficulty is probably with the 10,000 lb “measured” force.

10. HP_s = Power / MRR

Power = 24 hp
MRR = 550 in^3/min

HPs = 0.0436 hp/in^3/min

Table 21-3, Steel (200 BHN)
HPs = 1.50 hp/in^3/min & 0.73 hp/in3/min

The calculated value is well out of the expected range.

Case Study:

No case study

CHAPTER 22

Review Questions

1. The most important material property for cutting tools is hardness. The tool must be harder than the material being machined to prevent rapid wearing and early failures.

2. Hot hardness is the ability to sustain hardness at elevated temperatures. See Figure 21-22.

3. Impact strength is a material property which reflects the ability of a material to resist sudden impact loads without failure. It is a combination of strength and ductility and is measured by the energy absorbing capability of the material. The two tests used for impact testing are the Charpy and the Izod Impact test. The general term for impact strength is toughness.

4. Many cutting tools experience impacts during routine cutting processes. Interrupted cuts are common in milling. Cutting tools may also impact on hard spots or hard surfaces of a material .

5. RIP is hot isostatic pressing, a powder metallurgy process used to make cutting tools, particularly carbides. See Chap. 16.

6. Primary considerations in tool selection include: What material is going to be machined, what process is going to be used, what are the cutting speeds, feeds, and depths of cut needed, what is the tool material, and what are lubricants going to be used. See Figure 22 - 2 for complete answer.

7. A hard, thin, wear-resistant coating is placed on a tough, strong, tool material. Such composites have good impact strength and good wear resistance.

8. Cermets are a relatively new cutting tool material compared to composed of ceramic materials in a metal binder. See Figure22-10 for a comparison of cermets to other tool materials.

9. CBN is manufactured by the same process used to make diamonds. The powder is used as a coating for carbide blanks in the same way poly-crystalline diamonds are made. CBN powder is sintered and compacted onto a carbide substrate, diced with a laser into segments and the segments brazed into pockets in a standard tungsten carbide insert. The CBN layer is about 0.020 inches thick.

10. F. W. Taylor developed the experiments which lead to the Taylor tool life equation, developed the principles of scientific management and stop watch time study, developed the tool grinder methodology for grinding specific angles on cutting tools, and is considered to be one of the founders of Industrial Engineering. He was also the first

United States tennis doubles champion, dispelling the myth he had bad eyesight.

11. Cast cobalt alloy tools would be made by investment casting, due to the high temperatures of the alloys.

12. The compacted powders are compressed into a solid of uniformly fine grains. If cobalt is used as a binder, the solid cobalt dissolves some tungsten carbide, then melts and fills the voids between the carbide grains. This step is called sintering.

13. When the cobalt powders melt and fill the voids between the carbide grains, they "cement" the carbide grains together. This is an old term still used in the cutting tool industry to describe sintered, powder metallurgy tools.

14. The ground inserts are more precise - have less variability from tool insert to tool insert -- so that there is very little difference between tools. This is important when changing tools in automatic equipment or rotating the insert in an indexing tool holder. Therefore, the tool does not have to be reset when the insert tip is changed. Pressed inserts may vary in size as much as .005 inches and may carry this size change into the process.

15. The chip groove is placed on the rake face directly behind cutting edge. Depending upon the depth of cut, the chip groove can make the land in front of the groove act as a controlled contact surface and modify the cutting process. It can cause the shear angle to increase and therefore reduce the power and cutting forces. It can also cause the chips to bend sharply and fracture into short segments which makes chip disposal easier. See Figure 22-9.

16. As shown in Figure 22-13, a groove forms at the outer edge of the cut during the machining of materials with a hard surface or a surface with hard particles in it. The groove is called the depth of cut line or the DCL since it forms at a distance from the cutting edge equal to the depth of cut.

17. a) High speed steel will deflect the most - smallest E
b) Ceramic will resist penetration the most - hardest
c) High speed steel is the most ductile
d) Carbides are the strongest in compression.

18. Tools get hot and expand during machining. Different materials have different coefficients of expansion. The layers are graded with respect to thermal coefficients of expansion to reduce the probability of thermal cracking of the coats. Some layers are also used to promote bonding between the materials.

19. For high-speed steel, black oxide and nitriding are quite common but TiN of RSS is becoming very popular. Coating carbides with TiN and TiC and other materials is popular now using CvD. Aluminum oxide coating is becoming more popular. Ceramics are usually not coated or surface treated.

20. The reaction forms hydrogen chloride which can affect the impact strength and other material properties.

21. Lowering the coefficient of friction at the tool/chip interface reduces the secondary deformation. This has the effect of reducing the friction force, F. The reduction of F results in rotation of the force circle (or an increase in the shear angle). For a given cutting geometry, this means a reduction in F_s (because $F_s = {}_sA_s = \sim t\ w/ \sin\phi$) and F_c (because F_c is a function of F_s). Thus, the tools run at lower forces and lower temperatures and last longer.

22. CBN tools are used when other factors, such as interrupted cutting, do not mitigate against using as high a cutting speed as possible. An example is lathe turning of low strength materials. The machining processes amenable to the use of CBN cutters are similar to machining situations in which diamond cutters are used – with the exception of ferrous workpieces. Diamonds react chemically with ferrous materials while CBN does not.

23. Diamond reacts chemically with ferrous materials while CBN does not.

24. The coefficient of variation is the ratio of the standard deviation of a statistic distribution to the mean of the distribution. A large value indicates that the process which produced the data for the distribution has a large amount of process variability .

25. Tool life varies from tool to tool even when the tools are being used under identical conditions. Lifetime is a random variable, whether we are talking about tools, people, tires, or light bulbs. The random variable nature of tool life means that predicting tool death will be very difficult.

26. Metal cutting tool life data tends to be log-normal and have a coefficient of variation of .3 to .4. Compare this to values for yield strength data or UTS data which have values of
.03to .05.

27.Machinability is defined many different ways. The two most common ways are: machining specific horsepower (RP~) which reflects the power needed to remove a cubic inch of metal per minute - the more difficult metals will have higher numbers for specific horsepower; and machinability numbers based on tool life comparisons. A material is selected as the standard. A material which can be machined faster with the same tool life as the standard material has a higher rating than the standard. So the first measure is based on equal volume of material removed and ignores tool life, and the other on equal tool lives, ignoring power consumed. Other measures of machinability have been proposed using ease of chip removal and surface quality as criteria .

In the 1970's, one of the authors (Black) tried (without much success) to get people to think about flow stress, τ_s, as a machinability standard (like UTS) and developed a prototype machine to determine flow stress values for various materials. Many of the values given in Figure 21-21 came from this research.

28. From the earliest measurements of F. W. Taylor, it has been known that cutting fluids provide a cooling action for the tool. Because of the nature of the process, few usable cutting fluids provide a lubrication action to the tool/chip interface but this

29. Carbide tools are made in press and sinter operations. The compositions of the carbide constituents and the binder are important in determining tool mechanical properties and hence performance when cutting different work materials.

Powder metallurgy techniques are described in Chapter 16.

30.High-speed steel tools are coated to increase their useful life by covering them with a more highly wear resistant material. Physical vapor deposition is used since it is a relatively low temperature process and so has little effect on changing the HSS substrate material. Subsequent heat treatment to restore HSS properties after coating may not be required.

31. The is no universal cutting tool material since the requirements for the cutter vary widely with the material being machined and the kind of machining process being used.

At one extreme is the cutting of tough work material in an intermittent or interrupted cutting process such as milling. In this situation tool material resistance to impact loading and thermal cycling is required. High cutting speed is secondary to simply accomplishing the process and so high speed steel tools may be used in preference to other tool materials that have higher hot hardness but are more susceptible to chipping and fracture. At the other extreme are smooth, continuous machining processes such as finish lathe turning of low strength materials with small feed rate and depth of cut. In this situation, high hardness, high wear resistance tool materials can be used at high cutting speed. e.g., diamond tooling. The factors that make these tools materials susceptible to failure do not exist.

32. 18-4-1 or T1 high-speed steel is composed of iron, carbon and 18% tungsten, 4% chromium and 1% vanadium.

33. The most notable mechanical property of high-speed steel compared to other cutting tool materials is its higher toughness. It can also be more easily ground and so complex tool shapes can be produced. These characteristics make high speed steel tools useful for severe cutting situations requiring form tools, e.g., interrupted cutting processes such as milling using form cutters and gear cutting.

34. High hot hardness, high wear resistance cutting tool materials are usually brittle and so sensitive to changing forces and temperature, i.e., fluctuating forces and temperatures

cause varying stress fields and can lead to chipping and fracture. Non-rigid machine tools can cause dynamic, as opposed to constant level, forces and so adversely affect tool life.

35. While hardness is one indication of wear resistance, it is not the only one, and may be only an indirect indication of the resistance of the material to a particular wear mechanism.

Perhaps the most obvious shortcoming of hardness as a measure of wear resistance is in the chipping/fracture of cutting tools. Hard brittle materials are susceptible to chipping at the tool edge. So the tool material may be hard but still exhibit high wear rate if the work material, machining process and cutting conditions result in local, small-scale fracture and edge wear.

Also at a local level, hard inclusions in the nominally soft workpiece may abrade the tool and cause wear of the macroscopically much harder tool.

At high cutting speed, even with soft work material, high temperature is produced in the chip formation zone. The high temperature can result in diffusion of certain phases of the tool and tool wear. More specifically, for cemented carbide cutting tool materials the binder material may diffuse out of the tool exposing the brittle carbide structure to fracture and wear. This same type of tool weakening and wear can be due to chemical effects. In cutting green (moist) wood chemical action may remove the carbide tool binder. Then even relatively small cutting forces may cause fracture of the carbide phase.

36.A honed edge, or the chamfer shown in Figure 22-11, is the result of removing a small region at the tool cutting edge. The intent is to make the tool stronger. Much as negative rake angle increases tool strength by decreasing the wedge angle (θ in Figure 22-12) and changing the force at the tool edge to a more compressive stress pattern, honing has the same goals.

Problems:

1. With tool life equation $V T^n = K$ and K a constant,
can choose two data points and set the values for K equal,
Using the 3 min and 60 min tool life data points

$$(V T^n)_3 = (V T^n)_{60}$$

$$(40.6) (3)^n = (26.8) (60)^n$$

$n = 0.14$

V Tn = (40.6) (3).14 = 47.4 = K
Values for n in Table 22-6 indicate material is high speed steel, but there is a low value for K

2.

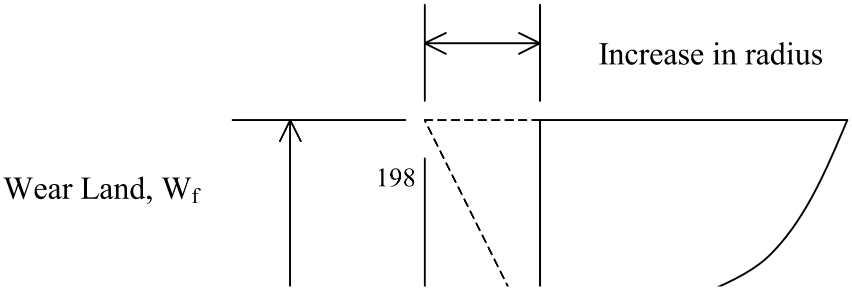

Increase in radius = (Wf)(tan 5^o) = (0.020 in)(tan 5^o)= 0.002 in
Increase in diameter = -.004 in

There may be other significant effects on machined diameter, e.g., workpiece and tooling deflection.

3.

A =	side rake angle
B =	side relief angle
C =	end relief angel
D =	back relief angle
E =	nose radius
F =	side cutting edge angle
G =	end cutting edge angle

4. $V T^n = K$
For sand casting – diamond
$731 (20)^n = 642 (30)^n$
$731 (20)^n = 514 (60)^n$
$642 (30)^n = 514 (60)^n$
gives n = 0.32 and $K = 731 (20)^{0.32} = 1907$

For permanent mold casting – diamond
$591 (20)^n = 517 (30)^n$
$591 (20)^n = 411 (60)^n$
$517 (30)^n = 411 (60)^n$
gives n = 0.33 and $K = 517 (30)^{0.33} = 1588$

For PMC – diamond will coolant
$608 (20)^n = 554 (30)^n$
$608 (20)^n = 472 (60)^n$

$554\ (30)^n = 472\ (60)^n$

gives $n = 0.23$ and $K = 472\ (60)^{0.23} = 1210$

For sand casting – WC – K-20

$175\ (20)^n = 161\ (30)^n$

$175\ (20)^n = 139\ (60)^n$

$161\ (30)^n = 139\ (60)^n$

gives $n = 0.21$ and $K = 161\ (30)^{0.21} = 329$

Problem 22-4								
		V (m/min) for tool life T (min) of				Log of V and T values		
Work	Tool	20	30	60		1.30	1.48	1.78
Sand Casting	Diamond	731	642	514		2.86	2.81	2.71
Mold Casting	Diamond	591	517	411		2.77	2.71	2.61
PMC	Diamond	608	554	472		2.78	2.74	2.67
Sand Casting	WC-K-20	175	161	139		2.24	2.21	2.14

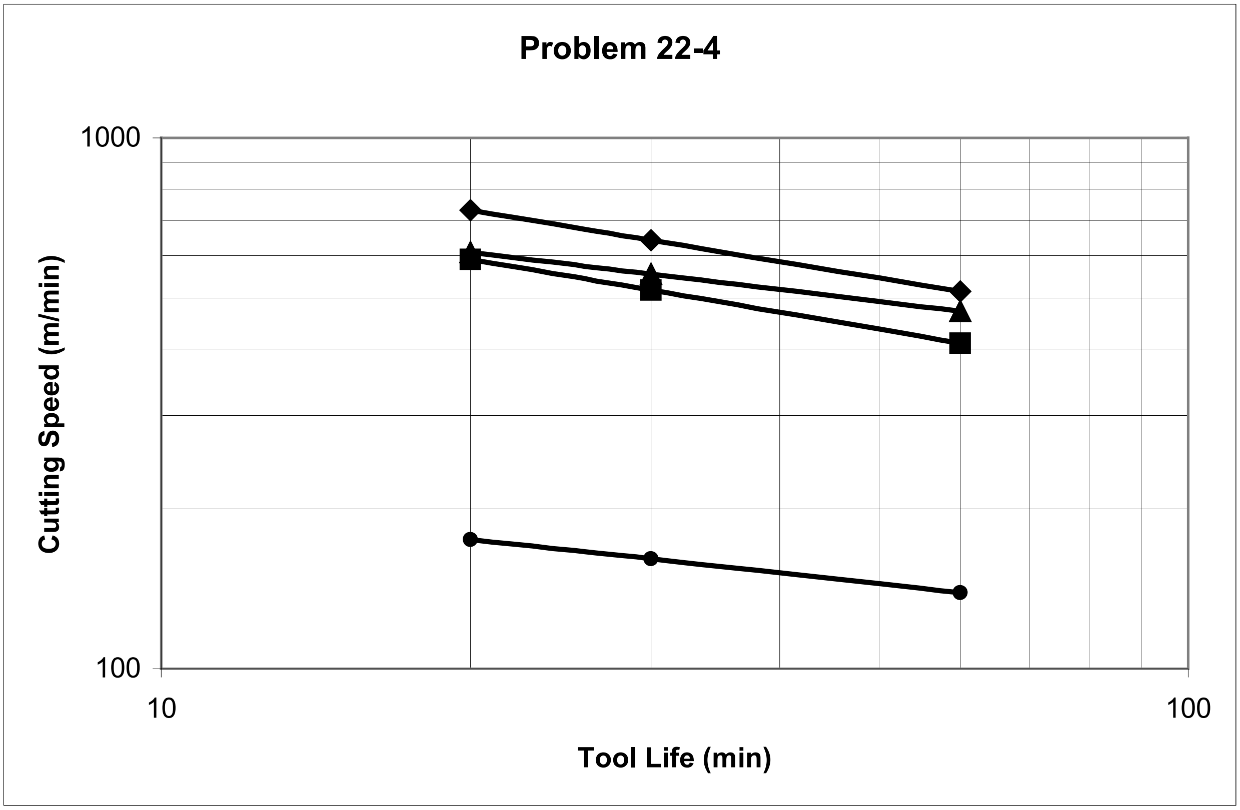

Slope		
for example		
Sand Casting	WC-K20	n = (log(330) - log(140)) / (log(60) - log(1))
		n = (2.519 - 2.146) / (1.778 - 0)
		n = 0.21
Sand casting	Diamond	n = (log(1900)-log(510)) / (log(60) - log(1))
		n = (3.279 - 2.708) / (1.778 - 0)
		n = 0.32

with the T = 1 intercepts, that are the values for K, determined by extaoplating the following plot

		V (m/min) for tool life T (min) of				Log of V and T values		
Work	Tool	20	30	60		1.30	1.48	1.78
Sand Casting	Diamond	731	642	514		2.86	2.81	2.71
Mold Casting	Diamond	591	517	411		2.77	2.71	2.61
PMC	Diamond	608	554	472		2.78	2.74	2.67
Sand Casting	WC-K-20	175	161	139		2.24	2.21	2.14

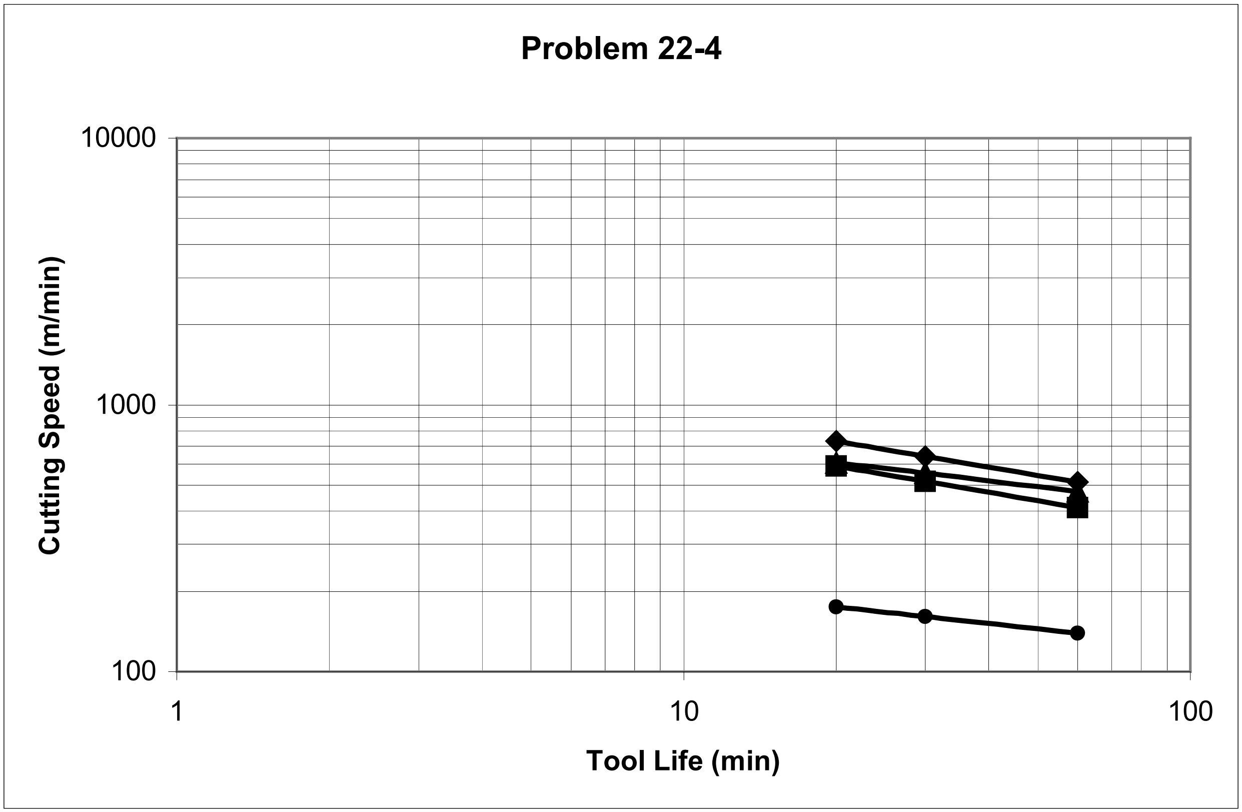

		V (m/min) for tool life T (min) of				Log of V and T values		
Work	Tool	20	30	60		1.30	1.48	1.78
Sand Casting	Diamond	731	642	514		2.86	2.81	2.71
Mold Casting	Diamond	591	517	411		2.77	2.71	2.61
PMC	Diamond	608	554	472		2.78	2.74	2.67
Sand Casting	WC-K-20	175	161	139		2.24	2.21	2.14

Or
plotting log T vs log V

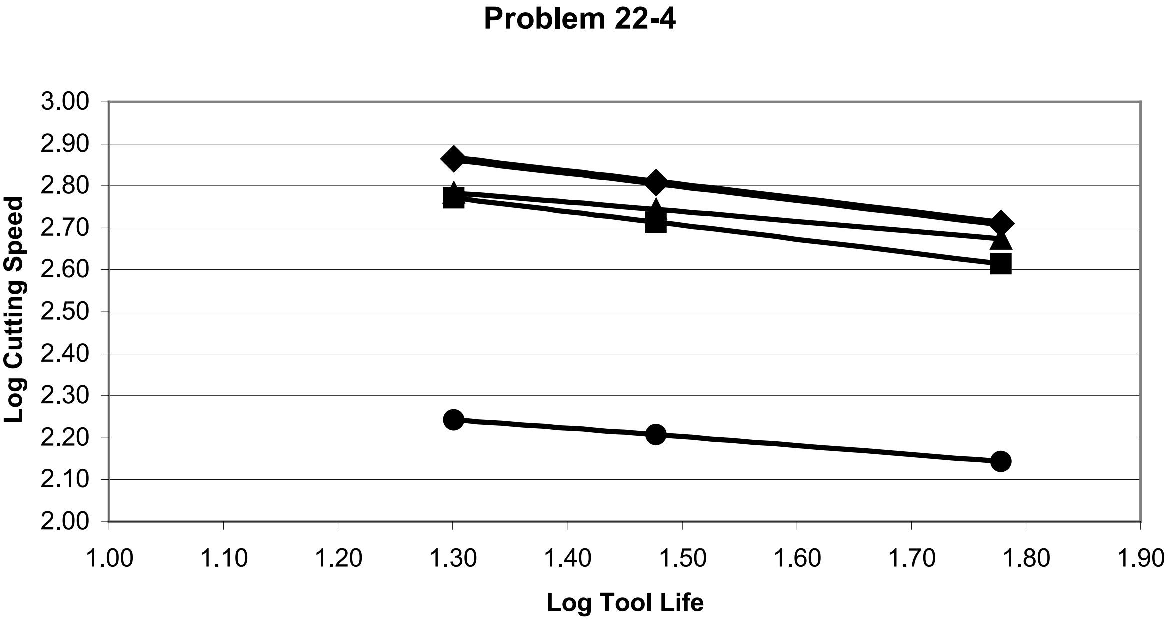

Slope		
Sand Casting	Diamond	n = (2.87 - 2.71) / (1.78 - 1.30) = 0.33
PMC	Diamond	n = (2.78 - 2.67) / (1.78 - 1.30) = 0.23
PMC	D + fluid	n = (2.77 - 2.61) / (1.78 - 1.30) = 0.33
Sand Casting	Diamond	n = (2.25 - 2.14) / (1.78 - 1.30) = 0.23

K		
for example		
Sand Casting	Diamond	extrapolate lowest line to Log Tool Life = 1, T = 10
	Log Cutting Speed = 2.3, V = 199	
	VTn = K = 199 (10)0.23 = 338	

5. a. cos(SCEA) = = 0.250 in / 0.289 in = 0.865 => SCEA = 30.1°

b)

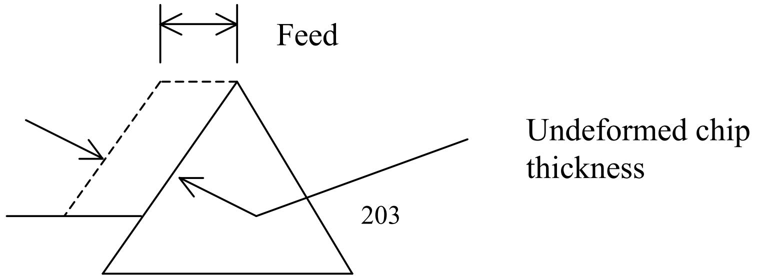

Undeformed chip thickness = (feed distance)(cos(SCEA)
Undeformed chip thickness = (0.010 in)(cos(30.1^{o}) = 0.009 in

c) When SCEA goes from 0o to a different value the orthogonal, essentially two-dimensional deformation and force situation changes to three-dimensional. A radial force arises producing work and tooling deflection and may cause chatter. A SCEA increases the chip becomes thinner, more heat is dissipated and notching wear at the work outer diameter is decreased.

6.

	SiN	PCBN
Tips/part	12	12
Tool life parts/tool	200	4700
Cost/tip	\$1.25	\$28.50
Tool cost/part	(12)(\$1.25)/200 = \$0.075	(12)(\$28.50)/4700 = \$0.073
Tool cost/yr	(\$0.075)(312,000 = 23,400	(\$0.073)(312,000) = \$22,776

There are costs with making change and these may very well be greater than the \$624 tool cost savings. However, There be other than cost advantages to adopting the new tools, e.g., part surface finish, less tool change time.

b. If there is to be a change it will be based on tool cost and other, important, factors. The finished cylinder bores are critical elements of the part. Changes in the product – over its entire life – that are related to changing tooling have to be evaluated. For example, changing cutting tools may affect bore surface finish and surface integrity and so affect engine performance in terms of power produced and cylinder bore wear.

7. The tool life equation is $V T^n = K$ and so the straight line relation is on a log-log plot, e.g., Figure 22-16 and n and K have constant values.

Given 2 in diameter the cutting speeds and tool lives are

Spindle Speed (rpm)	Cutting Speed, V (ft/min)	Tool Life, T (min)
284	149	10
132	69	30

With the two (V,T) points the values of n and K can be calculated and used in the tool life equation to calculate the cutting speed for a tool life of 60 min

for constant K,
$69 (30)^n = 149 (10)^n$ and n = 0.7
with n = 0.7, K = 746.5

for 60 min life, $V T^n = K$ is V (60)0.7 = 746.5 and V = 42.5 ft/min

Solving the problem by plotting the given values on log-log paper or if linear graph paper is used the given point are

(V, T) point	(logV, logT) point
(149, 10)	(2.17, 1)
(69,30)	(1.84, 1.78

Drawing a line between the point and picking the point on the line corresponding to tool life of 60 min (log 60 = 1.78) gives a log cutting speed value of about 1.62 and a cutting speed of $(10)^{1.62} = 41.7$ ft/min

If the straight line relationship is interpreted erroneously as a linear relation between V and T rather than $V T^n = K$,
then

the slope of the line is $\Delta V / \Delta T = (69 - 149)$ ft/min / (30 – 10) min = - 4
extrapolating from the V = 149 ft/min, T = 10 min point to T = 60 min gives

V = 149 ft/min + (-4 ft/min/min)(60 – 10) min = - 51 ft/min

8. The machining process dependent variables are:
a) eqn(21-18)

Chip thickness ratio = $r_c = t / t_c = 0.010$ in / 0.022 in = 0.455

b) eqn(21-19)

Shear plane angle = $\phi = \tan^{-1}\{ r_c \cos\alpha / (1 - r_c \sin\alpha) \}$

$\phi = \tan^{-1}\{ 0.455 \cos 10^o / (1 - .455 \sin 10^o) \} = 25.9^o$

c) Friction angle = see below
d) Coefficient of friction = see below
e) Friction force = see below
f) Shear force = see below
g) Shear stress on shear plane = see below
h) eqn(21-21)

Shear velocity = Vs = V { $\cos\alpha / \cos(\varphi - \alpha)$

Vs = 500 ft/min { $\cos(10^o) / \cos(26^o - 10^o)$ = 512 ft/min

i) Shear strain eqn(21-31)

$\gamma = \cos\alpha / [\sin(\phi+\psi) \cos(\phi+\psi-\alpha)$

eqn(21-34) $\psi = 45^o - \phi + \alpha/2$

gives corrected eqn(21-35) as shown in the center of page 503

eqn(21-22) corrected

Shear strain = $\gamma = 2 \cos\alpha / (1 + \sin\alpha)$

$\gamma = 2 \cos(10^o) / (1 + \sin(10^o)) = 1.68$

j) Specific shear energy = see below

Parts c, d, e, f, g, j require information in addition to that given in Problem. Specifically,
- a value for cutting force can lead to solution,
- a value for material shear strength can lead to solution,
- some other possibilities that enable use of concepts in Section 21-6

For example, Figure 21-21 shows a value for shear strength of 1018 steel, using a value of τ_s = 75,000 lb/in2 for 1015 steel gives

(f) eqn(21-28) $F_s = \tau_s A_s$

eqn(21-29) $A_s = t\, w / \sin\phi = (.0100\text{in})(.100 \text{ in}) / \sin(26^o) = 0.0023 \text{ in}^2$

F_s = 75,000 lb/in2 (0.0023 in 2) = 171 lb

(e) eqn(21-23) $F = F_c \sin\alpha + F_t \cos\alpha$

eqn(21-26) $F_s = F_c \cos\phi - F_t \sin\phi$

$F_c = (F_s + F_t \sin\phi) / \cos\phi = (171 \text{ lb} + 140 \text{ lb} (.438)) / 0.899 = 258 \text{ lb}$

F = 183 lb

(c) eqn(21-22) β = tan-1(F/N)

N = Fc cosα - Ft sinα = 230 lb

β = 38.5o

(d) $\mu = \tan\beta = 0.796$

(j) eqn(21-16) $U_s = F_s V_s / V f d$

U_s = (171 lb)(512 ft/min)(12 in/ft) / (500 ft/min)(0.01 in)(0.1 in)(12 in/ft)

U_s = 175,104 inlb/in^3

9. Figure 21-32 shows that temperature increases with cutting speed and that wear increases with temperature. The general conclusion is that wear increases with cutting speed. With regard to the data in Problem 1, the data show that as cutting speed increases the tool life (given amount of wear) decreases.

10. $V T^n = K$

n = 0.25, K = 1300

using the units of minute for T and ft/min for cutting speed

Spindle speed = N rpm

V = (N rev/min) (26.25π in/rev) (ft / 12 in) = 6.88 N ft/min

T = work length / feed speed = 48 in / { .01 in/rev) (N rev/min) } = (4800 / N) min

$(6.88 N) (4800/N)^{.25} = 1300$

N = 64 rpm

V = (64 rev/min) (26.25π in/rev) (ft / 12 in) = 439 ft/min

11. For the turning operation described in Problem 10

Horsepower = F_c V + Ft V_{feed}

V = 500 ft/min = N rev/min (26.25 π in/rev)(ft/ 12 in)

N = 72.8 rpm

V_{feed} = 0.010 in/rev (72.8 rev/min)(ft/12 in) = 0.061 ft/min

F_c = 258 lb estimated in Problem 8

negligible with respect to cutting speed

HP = 258 lb (500 ft/min)(hp / 33,000 ftlb/min) = 3.9 hp

12. It's not clear that how a cutting force comparison can be discussed since it seems that only one tool geometry is specified, i.e., in Figure 22-D.

Case Study: no case study

CHAPTER 23

Review Questions

1. In turning, the work rotates and the tool is fed parallel to the axis of rotation. In facing the tool is fed in the radial direction, toward or away from the axis of rotation..

2. In turning cylindrical, conical, contoured, tapered, and knurled surfaces can be produced externally. Internal turning is called boring. In facing a flat surface is produced.

3. In form turning, the shape of the tool defines the shape of the surface and the tool is usually fed perpendicular (or plunged) to the axis of rotation. See Figure 23-28 for examples of form turning.

4. Facing employs a tool that is wider than the desired cut width and the workpiece is not separated into two parts by the process as is the case in a cutoff operation. In both cutoff and facing, the tool feeds perpendicular to the axis of rotation.

5. Knurling, a common lathe operation, usually does not make chips - it cold forms the pattern into the surface.

6. It is not possible to provide the proper rake angles on all portions of a complex form tool. Typically, small or even zero back angle tools are used, so the cutting forces will be large. In addition, small increases in depth of cut result in very large force increases because the cutting volume is large (long cutting edge in contact); so depth of cut must be set (and held) small to prevent large deflections and chatter during machining.

7. $MRR = 12\ V\ f_r\ d$ uses V which is the speed at the outer, unmachined surface of the workpiece to calculate material removal rate. In reality cutting speed varies with radial position and V is the maximum value. So, the calculated MRR using V does not include the variation of cutting speed in the calculation.

8. A hollow spindle permits long bar stock to be fed through it into the workholding device (chuck or collet) much more quickly than if individual piece parts are used. The drawbar for the collet also must pass through the spindle. See Figures 23-4 and 23-38.

9. The carriage supports the toolholder and provides the feed motion to the tool.

10.

11. Either the feed rod or the lead screw drives the carriage. The feed rod system usually has a friction clutch in which slippage can occur. The lead screw provides positive ratios between carriage movement and spindle rotation and no slippage is allowed. The lead screw is for thread turning.

12. Work in a lathe can be held between centers, held on mandrels which are then held

between centers, held in 3 or 4 jaw chucks, or held in collets. Workpieces can also be directly mounted on a faceplate attached to the spindle and are occasionally mounted on the carriage and even in the tailstock assembly (very rarely) .

13. A device called a dog is attached to the work and the tail of the dog fits into a hole in the faceplate, which is directly attached to the spindle. See Figure 23-30.

14. After the work has been turned, the surfaces will be tapered rather than cylindrical. See Figure 23-11.

15. Hot rolled stock usually has an oxide scale on it, which is rough. Clamping on nonround, rough surfaces like this can damage the collet jaws and destroy the accuracy of the collet.

16. A steady rest is mounted on the ways and is stationary while a follow rest is mounted on the carriage and thus translates with it as it carries the tool. Both are commonly used on long, cylindrical workpieces.

17. A four-jaw independent chuck can be adjusted to clamp work of almost any shape within its capacity. Such a chuck requires more time to adjust than a three-jaw chuck, and it is not self-centering .

18. Minimizing the overhang of the tool improves the rigidity of the setup and reduces the tendency of the tool to deflect which in turn reduces the tendency to chatter and vibrate. Remember, deflection is a function of length of overhang cubed in cantilever beams, so a small change in overhang length can greatly change deflection and vibration tendencies.

19. Figure 23-12. On a ram-type turret lathe the ram holding the turret moves on the saddle – ram and saddle can move independently. On a saddle-type turret lathe the turret is fixed to the saddle – there is no movable ram between the saddle and turret and so the saddle-type turret lathe is stiffer with respect to tool and tool holding structures..

20. Tapers may be turned by: (1) use of the compound rest, (2) set-over of the tailstock, (3) use of a taper attachment.

21. The material removal rate is a function of speed x feed x depth of cut. Assuming speed is kept constant, heavier depths of cut or heavier feeds will reduce the number of cuts or passes that have to be made, which reduces the number of adjustments or resettings of the tool which have to be made. Increasing either feed or depth of cut will increase the cutting force. Increasing depth of cut will have less effect on tool life than increasing the feed. Either way, the total machining time is usually less. In addition, the surface finish is usually better with the lighter feed.

22. The rpm of a facing cut is based on the largest diameter of the workpiece, utilizing

the correct (selected) cutting speed.

23. See response to question number 18 above. Boring tools have large overhangs and are thus more subject to deflection, vibration, and chatter problems. Reducing the feed (or the depth of cut) reduces the cutting forces and thereby the deflection problems .

24. As the cutting rate increases, the surface finish usually improves - See Figure 23-7. However, large nose radius tools tend to chatter more.

25. The BUE will cause the tool to make heavier depth of cuts than expected, so the part may come out undersize.

26. In tooling a multiple spindle screw machine, it is important to have the machining operations at each spindle require the same amount of time. As shown in Figure 23-18, this time balancing can be very difficult to do. There will be one operation having a processing time larger than any of the other operations. The 2nd position drill or the 4th position tap are probably the operations with the longest operation times (about 5-7 seconds) .

27. The C-axis is the rotational position of the spindle on the lathe. For turning centers that have capabilities in addition to turning the workpiece may have to be held stationary in a certain orientation – the C-axis position – so that the other type of machining process can be done. For example, if a turning center has milling capabilities a turned shaft with two slots can be produced in one setup. The shaft can be turned and then held in specified positions, C-axis positions, while the milling of the slots is done.

28. In drilling, the drill can drift or shift off center. This is due to the chisel end of the drill not cutting and the drill being deflected as it starts the cut. In boring, the hole is the result of the rotation of the workpiece about its axis, which remains fixed.

29. On vertical boring machines, the weight of the workpiece is down on, and supported by, the table; whereas, in a lathe, it must be supported and rotated about a horizontal axis. Large, heavy workpieces will deflect the spindle, causing a loss in accuracy and precision.

30. On a horizontal boring machine, the workpiece does not rotate. In other words, workpiece rotation limits the number of surfaces which can be machined in a single setup. Thus, horizontal boring machines are more flexible. This machine was one of the first to be converted to NC. On this machine: (1) Several types of machining operations can be performed with a single setup, and (2) the workpiece does not move, thus it is easy to clamp and hold large workpieces. Finally, chip disposal is easier than on vertical spindle machines (for boring blind holes for example) .

31. Figure 32-14.

32. In a collet.

33. Figures 23-2, 23-11, 23-30, 23-38

34. Figures 23-11, 23-31

35. a. Three-jaw chuck; Figures 23-6, 23-14, 23-34: Figure 23-33
b. Collet; 23-17, 23-36
c. Faceplate; Figures 23-30, 23-38
d. Four-jaw chuck; Figure 23-5: Figure 23-33

36. Three form tools are used in this setup. The shaving tool is a form tool.

37. Since the intent of most operations is to machine a complete part in one setup all the machining operations have to be completed on one machine. If one tool fails the part cannot be completed and so the tool has to be replaced. The question then is whether to replace all the tools at this time. The general answer is that if the tool failed unexpectedly, i.e., after a very short time the other tools are expected to keep performing adequately and so only the failed tool is replaced. To do otherwise is disposing of useable tooling. The other extreme is if one tool fails at about the same time as the other tools are approaching the end of their expected lives. Then all tools are changes. The large middle ground is difficult to quantify since tool life is a stochastic variable, Figures 22-15, 22-18.

38. The tools to be used are shown in the turret in Figure 23-29. The last operation is to separate the final part from the remaining stock and so cutoff operation with tool 9 is the last one.

There may be rare exceptions but usually turrets are indexed sequentially from one tool holder to the very next one. This being the case the questions are what is the first turret operation, whether the turret rotates clockwise or counter-clockwise and whether there are operations between those performed using the tools in the turret.

The workpiece has to be positioned, so

1. Stock stop used to set extension of work out of collet

   An accurate initial diameter is needed so

2. Turn B using tool 3 which may include turning the entire part length

   Diameter D is needed and Figure indicates it is produced by

3. Turn D using turrep position 2

   An accurate initial diameter is needed for tread production so

4. Turn F using turret position 3

   The end face needs to be chamfered and center drilled and this will also aid in starting threading so

5. End face and chamfer – turret position 4
6. Center drill – turret 6

   Thread the end before reducing final part diameter since work will be stiffer so

7. Thread – turret position 7

   Machine diameters furthest from supported end first since work is stiffer and

8. Turn C and E with tool 5
9. Form cut with tool 8

10. Cutoff with tool 9.

Problems:

1. V = N rev/min (π 3 in/rev)(ft / 12 in) = 200 ft/min
N = 255 rpm

2. CT = (L + A) / (feed x N)
CT = (8 in + 1 in) / {(255 rev/min)(0.020 in/rev) = 1.76 min

3. Material Removal Rate – exact:
i. MRR = Volume removed / time

Volume = π/4 (work length)($d_o^2 - d_f^2$)
change in diameter = 2 (depth of cut) = 0.25 in
V = π/4 (8 in){ $(3 \text{ in})^2 - (2.75)^2$) } = 9.03 in3
time = distance / feed speed
feed speed = N rev/min (0.020 in/rev)
V = 200 ft/min = N rev/min (π 3 in/rev)(ft/ 12 in)
N = 254.6 rpm
feed speed = 5.09 in/min
t = 8 in / 5.09 in/min = 1.57 min

MRR = 5.75 in^3/min = 94,225 mm^3/min

ii. Or
using do – ½(depth of cut) to calculate cutting speed
MRR = V f d
V = 254.6 rev/min (π 3 in/rev) = 2350 in/min
MRR = 2350 in/min (0.020 in)(0.125 in) = 5.875 in^3/min = 96,274 mm^3/min

Material Removal Rate – approximate:
MRR = V f d = 200 ft/min (0.020 in)(0.125 in)(12 in / ft)
MRR = 6 in^3/min = 98,332 mm^3/min

4. a). Engine lathe cost TC_{EL} = (0 .5 Q + 0.5) 18 + 0
Turret lathe cost TC_{TL} = (0.083 Q + 3) 20 + 300
Equate TCEL = TCTL at BEQ
(0.5 Q + .5) 18 = (0.083 Q + 3) 20 + 300
9 Q + 9 = 1.67Q + 60 + 300
Q = 351 / 7.33 =41.9 or42 units

b). 0.5 (18) + (0.5 x 18) / 41.9 = 9 + .21 = $9.21/part

5. The feed given in the problem (for boring) is 0.5 mm/rev or

about 0.02 ipr. The depth of cut is (112) x (89-76) or 6.5 mm or
0.255 inches. Assuming that for 1340 steel, the BHN would be in
the low range (175 to 225), Figure 42-11 on page 1179 recommends
a cutting speed of 80 sfpm or 24.4 m/min.

Drilling RPM for 18 mm drill = (24.4 x 1000)/(18 x 3.14) = 431
Drilling RPM for 76 mm drill = (24.4 x 1000)/(76 x 3.14) = 102.2
Boring RPM = (24.4 x 1000)/(89 x 3.14) = 87.3
Drilling time for 18 mm drill = (200 + 18/2)/(431 x 0.25) = 1.94 min.
Drilling time for 76 mm drill = (200 + 76/2)/(102.2 x 0.64) -3.64 min.
Boring time = 200/(87.3 x 0.5) = 4.58 min.
Center drill time = 0.5 min.
Four changes of speed and tool settings require 4 x 1 mm = 4 min.

6. a) Taking “fixed cost” completely literally, i.e., not varying with production quantity, the fixed cost is the constant cost per unit part of the curves. Estimating costs from the log Cost per unit axis
Engine lathe; 30 - 40
NC lathe; 6 - 7
Single spindle automatic; 2 - 3

7. The derivation of the approximate equation 23-5 for the MRR for turning requires an assumption regarding the diameters of the parts being turned. The derivation is:
$\text{MRR} = 12 (D_1^2 - D_2^2)\ fr\ V / 4 D_1$
$\text{MRR} = 12 \{ (D_1 - D_2) / 2 \} \{ (D1 + D2) / 2\ D1 \}\ fr\ V$
$V \simeq 12\ V f t$
where $(D_1 - D_2) / 2 = t$ and
$(D_1 + D_2)/ 2 D_1 = (D_1 + D_1 - 2t) / 2 D_1 = 1 - t / D_1 \simeq 1$ for $t / D1 \simeq 0$
which assumes t, the depth of cut, is small and negligible compared to the uncut diameter, D_1, so that $t / D_1 \simeq 0$.

Case Study: New “Estimating the Machining Time for Turning”

Total machining time is
CTT = (machining time for one pass)(number of cutting passes) + tool change time
The problem comes down to determining the machining time for one pass and the number of passes required. The machining time for one pass will be determined by the feed rate, f, along with the length of the workpiece, L, and the allowance, A. The number of passes necessary will be determined by the depth of cut, doc. There are three concerns that set limits on feed rate and depth of cut and they are available power, workpiece deflection and tool wear.

Cutting time for one pass over the forging is CT = (L + Allowance) / feed speed
the feed speed is (spindle speed rev/min)(feed rate in/rev) = N f

A starting place is to choose a tool life based either on desired tool cost if more than one tool can be used or life long enough to complete the machining operation with one tool. This tool life will give a cutting speed and cutting speed is needed in the analysis to follow. After the results are calculated the tool life chosen can be reassessed and is it is not consistent with the results obtained, the analysis can be repeated with a different tool life.

Tool life = 30 min
- tool life equation $VT^n = K$
- using given data in part 1 and *noting feed rate = 0.020 ipr and* $\alpha = 10^o$

  $(VT^n)_{60} = K = (VT^n)_{85}$

  $60 (100)^n = 85 (10)^n$

  $K = 120$, $n = 0.15$

For 30 min tool life: $V (30)^{0.15} = 120$

$V = 72$ ft/min

Power Available constraint:

power available = power required

50 hp (0.75) = HPs (MRR)

HPs from Table 21-3 and BHN = 300 – 400

for steel with BHN = 300 the larger unit power is 1.87 hp/in^3/min

say HPs = 2 hp/in^3/min

V = 72 ft/min = 864 in/min

37.5 hp = (2 hp/in^3/min)(f)(doc)(864 in/min)

(f)(doc) = 0.022 in^2

- this is a large area, e.g., feed rate of 0.020 ipr and depth of cut = 1.1 in
- and so power will not be a limiting factor

The power required can also be calculated using the cutting force, Fc, and thrust force, Ft,

power available = Fc V + Ft Vfeed

The machining forces are calculated below.

Deflection constraint:
- the radial force is said to cause deflection and the machining process models can be used to relate feed and depth of cut to cutting force Fc and thrust force Ft
- two machining process models are available; the specific power model used above and the machining forces model
- the cutting forces model will be used since material shear strength data and measured chip deformation (chip thickness) information are available
- model workpiece supported between centers as a simply supported beam
- deflection will be maximum when force applied is at midlength and diameter is minimum so D = 6 in
- deflection, δ (= 0.005) in of a simply supported, circular cross section beam with load P applied at mid length is

$\delta = PL^3 / 48\ EI$

$E = 30E6\ lb/in^2$ is typical value for steel

$I = \pi\ D^4 / 64 = 63.6\ in^4$

$0.005\ in = Fr\ (\ 96\ in\ )^3 / [\ (\ 48\ )(\ 30E6\ lb/in^2\ )(\ 63.6\ in^4\ )\ ]$

Fr = 518 lb

and with the given force relationships

Ft = 2 Fr = 2 (518 lb) = 1036 lb

Fc = 2 Ft = 2 (1036 lb) = 2072 lb

The cutting force and thrust force are functions of feed rate and depth of cut and the shear strength is known

eqn(21-30) $tw = (\ Fc \sin\phi \cos\phi - Ft \sin^2\phi\ ) / \tau$

shear angle was measure – chip thickness ratio – *at feed rate = 0.020 ipr*

at V = 20 ft/min, rc = 0.4: at V = 80 ft/min, rc = 0.6

at V = 72 ft/min, rc = 0.4 + [(0.6 – 0.4) / (80 – 20)][72 – 20] = 0.57

$\tan\phi = rc \cos\alpha / (\ 1 - rc \sin\alpha\ ) = [\ (\ 0.57\ )(\ .985\ )\ ] / [\ 1 - (\ 0.57\ )(\ 0.174\ )\ ]$

$\phi = 32^o$

$tw = [\ 2072\ lb\ (\ 0.53\ )(0.85\ ) - 1036\ lb\ (\ 0.53\ )^2\ ] / 125{,}000\ lb/inb^2 = 0.0051\ in^2$

the data was developed for *feed of 0.020 ipr* so

t = doc = 0.26 in

For the limiting doc = 0.26 in based on workpiece deflection the number of passes is

NP = (change in radius) / depth of cut = [(10 – 6) / 2] in / 0.26 in

NP = 8

The feed speed depends on spindle speed and if the cutting speed is to be maintained at 72 ft/min the spindle speed will have to be changed for the different machining passes. The average diameter during production is 8 in and the average spindle speed is

$V = 72\ ft/min = N\ rev/min\ (\ 8\pi\ in/rev\ )(\ ft/12\ in)$

N = 34.4 rpm

and the feed speed is

S = 34.4 rev/min (0.020 in/rev) = 0.7 in/min

For a half-inch allowance the machining time per pass is

CT = (96 in + 0.5 in) / 0.7 in/min = 137.9 min

It is reasonable to expect that the eight passes will be used to bring the diameter to close to the specified finished diameter and then a finishing cut made. If the finishing cut is made with a feed rate of 0.005 ipr the feed speed is on fourth of the roughing feed speed and the machining time for the finish cut is

CTF = (96 in + 0.5 in) / [(0.7 in/min) / 4] = 551.4 min

For the eight roughing passes and one finish pass the total machining time is

CTT = 8 (137.9 min) + 551.4 min = 1654.6 min

This time is far in excess of the starting estimate of 30-minute tool life and so re-evaluation of the analysis procedure is not needed.

For the 30 minute tool life there will be 1655 min / 30 min/tool = 55 tool changes and a tool change time of

TCT = 55 (time to change tool)

should be added to the total machining time.

CHAPTER 24

Review Questions

1. The flutes form the rake angle of the cutting edges, permit coolant to get to the cutting edges, and serve as channels (elevators) through which the chips are lifted out of the hole.

2. The rake angle of the drill is determined by the helix angle of the drill at the outer extremities - the tips - and gradually changes to a zero rake angle at the inner extremities- the chisel edge. The center core drill shown in Figure 24-4 has a small, uniform rake angle.

3. The helix angle is mostly determined by the material being drilled .

4. The smaller hole provides a guide for the cone portion of the point of the larger drill, of sufficient size so the chisel point of the latter does not contract the workpiece at the start and thus cannot cause the drill to wander. In addition, larger drills can drill faster if the central region of the hole is drilled out first as the negative point is removed from the operation, lowering the cutting torque and thrust considerably. Of course, an extra operation is needed (i.e. drilling the smaller hole first) .

5. <u>Area of the hole</u> times <u>the feed rate</u>, where (f_r)N is the feed rate.

6. Spade drills typically are operated at slower speeds (lower rpms) and higher feeds than twist drills.

7. The hole will generally be oversize as the drill will not be cutting properly and will probably use more torque and thrust.

8. The drill selected to machine the hole generally has a diameter equal to the nominal hole size, so unless the drill has excessively worn, the hole will typically be equal to the nominal size or greater.

9. Two primary functions of a combination center drill are:
(a) To start the hole accurately at the desired location, and
(b) to provide a tapered guide for the drill to be used.

10. The margins bear or rub against the drilled hole and help to guide the drill and prevent it from bending. This rubbing action also produces heat which expands the drill and increases the rubbing and friction which can increase the torque. Proper lubrication is advised to reduce the friction at the walls of the hole.

11. Drift is a particular problem with small drills and deep holes. If the rake angles or the lengths of the cutting edges between the two sides are not equal (this is usually due to improper regrinding of the drill), a force imbalance can cause the drill to drift off line. Hard spots in the workpiece can also cause the drill to move off line, as can a large void

or other material nonhomogeneities.

12. The holes provide a way to get cutting fluid to the cutting zone and so aid in cooling and lubricating the chip formation zone. Such drills are usually employed for long, deep holes.

13. The deeper the hole, the greater the surface area of the drill in contact with the hole wall (the margin) and in contact with the chips coming out the flute. The chips can also pack in the flute and increase the friction and thus the torque.

14. Cutting fluids have lubricants to reduce the rubbing friction between the drill margins, and the chips, as they contact the walls of the hole.

15. Figures 24-6, 24-11, 24-12

16. A gang-drilling machine has several independent spindles mounted on a common base, and usually has a common table. A multiple-spindle drilling machine has several spindles driven and fed in unison by a single powered head.

17. The thrust force (the force 900 to the cutting force or torque) increases with increasing feed. See Figure 24-4.

18. Holding the workpiece by hand may result in broken hands, fingers, or even arms as the workpiece may catch on the drill, particularly at breakthrough, causing the workpiece to rotate at the drill rpm.

19. Centering insures that the drill will start at the right location and not walk off the desired spot. Drilling creates the hole itself. Boring produces a sized and properly aligned hole over the entire length, correcting for any drift problems. Reaming provides for final finish and exact hole size.

20. The slot-point drill reduces the thrust significantly compared to other drills by eliminating the chisel end of the drill. The material in the center of the hole is left undrilled and is periodically fractured away as the drill advances. See Figure 24-4.

21. Spot facing produces a smooth surface normal to the hole axis, as a bearing surface, usually for a bolt head, washer, or nut.

22. Counterboring produces a second hole of larger diameter and with a smooth bearing surface as its bottom, which is normal to the axis of the hole. See Figure 24-22.

23. Reaming provides for excellent hole finish and more exact size.

24. Shell reamers are cheaper, because the arbor is made of ordinary steel and may be used with more than one shell. Only the shells are made from HSS or coated HSS.

25. First, the geometry of a drill for plastics will be very different than a drill for cast iron. It will have much larger helix angles and therefore larger rakes. Also, plastic is a very poor heat conductor compared to cast iron so the frictional heat will remain in the drill, causing it to overheat.

26. The drill should be withdrawn from the hole at frequent intervals to remove the chips and permit the drill to cool. This procedure is called pecking. Ample coolant should be used. See also Figure 29-15.

27. A spade drill requires a much smaller amount of the expensive cutting tool material, and it can be made more rigid than a comparable twist drill. Also, the different point geometries allow these drills to start more accurately. They are really more like milling cutters than drills, and are used for large holes that are not too deep (there are no flutes to carry the chips out of a deep hole) .

28. The drill bit is repeatedly withdrawn from the hole during the drilling process in order to clear the flute of chips. This procedure is invoked whenever the hole depth to drill diameter exceeds 3 to 1. See also Figure 29-15.

29. Recall the equation which relates rpm to cutting speed:

$$V= \pi D N / 12$$

Write the N term as the ratio of drill rate (in./min.) divided by the feed rate (in./rev.)

$N = f_m / f_t$. Therefore, $V = \pi D fm /(12 ft)$

In order to keep the cutting velocity at the drill tips constant (keep V constant), while maintaining the same penetration rate(keep fm constant), the feed rate must increase in proportion to the drill diameter, D.

$$D / f_t = 12 VI (\pi f_m)$$

30. If the feed is too large, one could experience drill fracture up the middle of the drill, chipping of the cutting edge, and rough walls on the drilled hole. See Table 24-7.

Problems:

1. The selection of proper speeds and feeds is the first step in any process analysis or planning. Someone has to decide the cutting parameters. Since this is an indexable-insert drill, Table 24-1 can be used. Otherwise, standard references like the 1(machinability Data Handbook can be used. For 1020 cold rolled steel, the recommended speeds and feeds are 400-550 sfpm and 0.004-0.007 ipr respectively. The allowance would typically be D/2. You might want to use a spade drill here as it is less expensive and ideal for shallow, large-diameter holes - See Figure 24-13.

2. Problem 1 is solved here using a cutting speed of 410 sfpm and a feed of 0.005 ipr. The allowance used is one half of the drill diameter.

CT = (Hole depth + Allowance) / fr N

$CT = (2 +0.75) \text{ in} / \{ (0.005 \text{ in/rev}) [(12)(410)] / [\pi 1.5] \text{ rev/min}\}$
$CT = 2.75 \text{ in} / 5.22 \text{ in/min} = 0.527 \text{ min}$

3. Cutting speed = 200 fpm
N = (12 x 200)1 3.14 x 1.5 = 509 rpm
$MRR = \pi D^2 /4 N f_r$
MRR = (3.14 x 1.52)14 x 509x 0.010
MRR = 1.76 x 509 x 0.010
MRR = 8.99 cu.in./min. or 9 in^3/min

4. HP = (0.9 hp/in^3/min)(9.0 in^3/min) = 8.1 horsepower

5. 1 hp = 0.7457 kW so 1.5 kW -= 2 hp
CS = 200 fpm
N = 509 rpm
$MRR = \pi D^2 /4 N f_r$
$MRR = [3.14 (2)^2 / [4 (509)(0.010)$

Also, $HP = HP_s (MRR)$
So, $MRR = HP/HP_s = (2) (75) / 0.70 = 2.14$
Therefore, $2.14 = 3.14 \times 509 f_r$
$f_r = 0.0013$
f_r (max) = 0.0013 ipr
The process is severely limited to light feeds.

6. $MRR = (\pi D^2 L/4) / (L / frN) = (\pi D^2 / 4) (f_r N)$
$MRR = (\pi D^2 /4) f_r (12 V / \pi D)$
$MRR = 3 D f_r V$

7. Yes. $f_r N$ = feed rate in inches/minute

8. The time to change the drill is spread over the total number of holes drilled between tool changes. The units are time per hole.

9. Spade drill:
Feed rate = 204 x 0.009 = 1.836 in./min.
Holes/mm = 1.836 *1* 3 in/hole = 0.612
Cost/hole = (45/60)1.612 + 160.90/ X (where X = holes/tool)

Indexable-insert drill
Feed rate = 891 x 0.007 = 6.237 in./min.
Holes/mm = 6.237 1 3 in/hole = 2.079
Cost/hole = (45/60)12.079 + 285.80/ X

Equating:
1.225+ 160.90/X = 0.36 + 285.90/X

BEQ:
X= (2.85.80 - 160.90)/(1.225-0.36)
X = 124.90 I 0.865 = 144

If you were doing more than 144 holes, the extra cost of the indexable-insert drill may be justified.

Why is it a “reasonable assumption” to assume that both tools make the same number of holes? The cutting speeds selected here are from tables of recommended speeds, and these tables typically recommend speeds that give 60 minutes of tool life.

Of course, the decision to change from one process to another is made on the basis of many factors in addition to tool cost.

10. a). The tolerances between the holes is based on ± 1 degree Converting degrees into inches, ± 1 degree = (3.14 x 6)/360 = 0.05 inches.

b) Yes, a multiple spindle drill setup can meet this tolerance specification, as such a setup would have a process capability for hole location of ~ 0.030 to 0.050 inches, assuming good drills are being used.

c). Using a drill jig would improve the situation by an order of magnitude to * 0.003 to * 0.005 inches.

Case Study: “Bolt Down Leg on a Casting”

1). The machining difficulty was in starting the drill for machining the bolt hole on the inclined, rough cast iron surface. The drill point would tend to “walk” down the surface, and drill breakage would result due to bending of the drill bit.

2) Assuming the fixture used is accurate, the varying distance between holes is due to the drill walking to a location other than the specified hole location.

3). The failures were in the form of cracks, at location as shown in Figure CS-24. These failures were caused by sharp corners (produced by the counterboring operation) which created a stress concentration when the leg was placed in service and received a moment bending load. The sharp corner was placed in tension, and cast iron is weak in tension. NOTE: This problem could be further aggravated if white cast iron were produced in this region as a result of rapid cooling rates in the thinner leg segments.

4). One solution would be to redesign the part so that the present curved surface is flat. This will eliminate the counterbore and sloped surface from the processing. Another alternative would be to use a start drill, drill and counterbore sequence with the counterbore enlarged somewhat and given a large radius to eliminate the sharp corner. If possible, drilling from the bottom would eliminate the drill “walking”.

5). To stop failures in the field, it will be necessary to eliminate the sharp corner. The same oversize counterbore operation can be manually performed on units in the field if they have not been installed. Those that have been installed and failed must be replaced since cast iron cannot readily be repaired. The company should replace these at no cost to the customer. Other installed units should be repaired (and/or replaced) as rapidly as possible, particularly if failures in the field could lead to personal injury.

CHAPTER 25

Review Questions

1. Since multiple-edge cutters are used material removal rate can be high in milling. If sufficient power and tool strength is available along with allowable surface finish requirements, large feed rates and depths of cut are possible for the multiple cutting edges.

2. In peripheral milling the surface produced is parallel to the cutter axis of rotation, Figure 25-1. In face milling, Figure 25-2, the generated surface is perpendicular to the cutter axis. For mass-production machining material removal rate is the primary concern. Assuming sufficient power is available, wide peripheral milling cutters or large diameter face milling cutters can be used to achieve high material removal rate.

3. If the volume of metal removed is the same and the only difference is the direction of rotation, one would think the power (FcV) would be the same. In climb milling, a component of the cutting force is in the same direction as the feed force which lowers the power requirements on the feed motor.

4. Casting surfaces can be quite hard (due to rapid cooling) or contain hard spots (rapid cooling around grains of sand) as well as abrasive grains (in sand castings). These factors can lead to more rapid tool wear when the cutter tooth comes down into the surface from above versus from below as in up milling.

5. The material removal rate is given by equation (25-5)

$$MRR = W f_m DOC$$

and depends on the width of the cutter of workpiece, W, the depth of cut DOC, and the cutting time, T = length of cut / machining time. Machining time depends on the table speed.

Material removal rate in milling can be viewed as the rate at which the cross section of material being removed is advancing through the workpiece. The area being removed is

(depth of cut)(width of cut)

and it is being removed at a speed equal to the speed of the cutter through the workpiece or the

table speed.

6. You would have end milling, and you would be milling a slot.

7. Helical toothed cutters enter the workpiece progressively. Thus, the impact of initial tooth contact is less, and, overall, the cutting forces are smoothed out as two or three teeth are engaged in the work at the same time.

8. Imagine all the F_c patterns superimposed on each other which forms a steady F_c with small scallops.

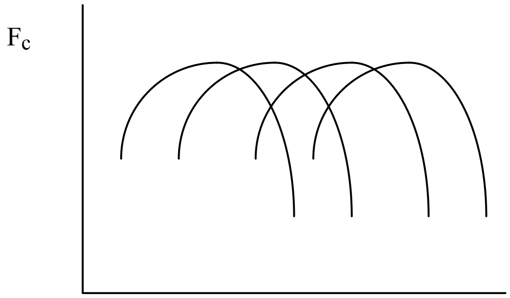

9. No. The cutting edge on the insert shown in Figure 25-7can produce only a flat, horizontal surface. Production of a T-slot requires machining of horizontal and vertical surfaces.

10. The teeth are staggered so that the teeth can be given a side rake angle in addition to a back rake. This reduces the impact at entry and the cutting forces overall.

11. The table on a plain column-and-knee milling machine cannot be swiveled to permit cutting a helix, as required for the flutes of a twist drill. A special attachment to hold a ball end mill and a universal dividing head can be used as shown in Figure 25-17.

12. The block has to be mounted on the machine table, either directly clamped of in a vise or fixture. This means that the two sides of the block available for simultaneous milling are perpendicular to the machine table. So, two side milling cutters, Figure 25-8 could be mounted on the arbor of the horizontal milling machine as shown in Figure 25-9 and two sides of the block machined.

13. The most distinctive feature of the column-and-knee type milling machine is the combination of the column that supports a movable knee. The knee then supports the saddle and table. In contrast, in a bed-type mill the table is supported by a stationary part of the machine frame.

14. The table can move horizontally, left, and right. The table sits in a saddle, which can move horizontally, in and out. The saddle sits on the knee which can raise and lower the saddle-table assembly.

15. The rate ring limits the amount of deflection of the stylus. See Figures 25-16.

16. The vertical spindle Bridgeport was (and still is) a very versatile machine, and it was very accurate and precise.

17. The dividing head uses a worm-gear reduction assembly. See Figure 25-17. When you turn the crank one revolution, the spindle on the other end rotates 1/40 of a revolution. The index plate is designed such that a workpiece can be rotated through almost any desired number of equal arcs.

18. Connecting the input end of a universal dividing head to the feed screw of the milling machine causes the workpiece to be rotated a controlled amount as the table moves longitudinally. see Figure 25-17.

19. The hole-circle plate (or the index plate) is to control the rotation of the workpiece through a desired angle. See Question 20.

20. The only hole circle that can be used is the 27-hole circle. All others do not give a whole number of holes. The calculation is (40 x 27)118 = 60 holes. Thus a tooth gap would be milled and then the gear blank rotated by cranking through 60 holes or about 2.22 revolutions of the crank, and then the next tooth gap milled. The setup is shown in Figure 31-7 for cutting helical gears.

21. As in all machining processes, the cutting speed (V) is selected based on the cutting tool material and work material. The feed (f_t) is also selected in terms of how much each tooth will remove during each pass over the work -- the feed per tooth (See Table 25-1). The RPM is computed from the selected speed by:

$N = (12 \times V)/(3.14 \times D)$ where D is the cutter diameter

Then, the table speed is calculated from:
$f_m = f_t \, n \, N$ where n is the number of teeth in the cutter .

22. See answer to question 24. The important aspect of milling feed is the amount of material removed per cutting edge and this depends on spindle speed, table speed and number of teeth.

23. The large cutting forces in slab milling must be considered. These forces tend to dislodge the part in slab up milling. In vertical spindle milling, the chip engagement (chip thickness) tends to stay more uniform and overall the cutting forces are not as large.

24. A cutting speed of 50 to 100 fpm and a feed per tooth of 0.005 to 0.010 ipt are quite reasonable values. The student must go to a handbook or similar source to find the values. See also Table 25-1.

Problems:

1. $V = \pi.D\,N / 12$, so
$N = 12\,V / (\pi D) = [\,12\,(200)\,] / (3.14 \times 8)$
$N = 95.5$rpm
$f_m = n\,N\,f_t = 10\,(95.5)(0.01) = 9.55$ ipm

2. $N = 12\,(70) / [\,(3.14)(6)\,] = 44.5$ rpm

$f_m = n\ N\ f_t = 8\ (\ 44.5\ )\ (\ 0.012\ \text{ipt}\ ) = 4.28\ \text{ipm}$

CT $(L + All) / f_m = (12 + 3 + 3) / 4.28 = 4.2$ min.

3. MRR = Vol / CT = $W\ t\ f_t = 5\ (\ 0.35\ )\ (\ 4.28\ ) = 7.49$ cu.in./min.

4. HP = MRR (HP_s)= 7.49 (0.67) = 5 horsepower

5. The axially symmetric sections of the part would be made in lathe turning operations. The left end face would probably be produced in a facing cut on the lathe.

Flat surfaces can be milled and for the slot some options are:

Process	Tool	Cutting Conditions	
Slotting Figure 25-8	width equal to slot width	- spindle speed - depth of cut - table speed	- slotting cutters stiffer than end mills - slotting typically done in one pass
End milling Figure 25-3	diameter equal to or less than slot width	- spindle speed - axial depth of cut - table speed - radial depth of cut for finishing pass if diameter less than slot width	- end milling may require more than one pass
End milling on a turning center Figure 23-14	same as end milling		- use lathe C-axis Question 27, Chapter 23 - turning and slotting on one machine

6. The first step in the problem is the selection of a cutting speed. From Table 25-1, the student might select anything from 40-130 sfpm. Let's say 120 sfpm is selected.

For face milling:

RPM of cutter = [(120)(12)] / [(3.14)(8) = 57.3 rev/mm

Table feed, $f_m = n\ N\ f_t$ = (10)(57.3)(0.010) = 5.73 in/mm

CT = Machining time where A = D/2

$= (L + A) / f_m = (18 + 4) / 5.73 = 3.83$ mm/part

Setup time (a one time operation) = 60.0

min.

Load and unload fixture (very conservative) = 2 min

Total time for one part is = 65.83 min

Cost to make one = (60.00 / 60)(33.25 / 1) + (33.25)(5.83) / 60 = \$37.03/part

Cost to make 10 = (60.00 / 60)(33.25 / 10) + (33.25)(5.83) / 60= \$6.55/part

Cost to make 100 = … = \$3.56/part

For shaping, use V= 120 sfpm (high but used for comparison):

$V = 2\ 1\ Ns / 12\ R_s$

where is the fraction of the total stoke during which cutting occurs and is typically about $R_s = 200^o / 360^o = 5/9$, Equation (26-1)Figure 26-1

l = 6 (Equation 26-3)

$N_s = 66.6$ This is RPM of the bull wheel (See Figure 26-1)

CT = 18/ [(66.6)(0.015)] = 18 min/part (no allowance)

Cost to make one = (10 / 60)(25.25 / 1) + [(25.25)(18.00)] / 60 = \$12.77/part

Cost to make 10 = = \$7.99/part

Cost to make 100 = ... = \$7.61/part

The shaper is cheaper when the lot size is very small. At some higher number of parts, the milling machine will be the better choice. Note that the reduction or elimination of setup time could make milling the choice even for a lot size of one.

7. For milling, the percentage of time spent in nonmachining activities is

[60 + (2)(10)] / { [(5.83)(10)] + 60 } = 80 / 118.3 =or 67.6%

For shaping, the percentage of time spent in nonmachining activities is

[(10 + (2.0)(10)] / [(18.0)(10) + 10] = 30/191 or15.8%

8. Figure 25-10 and equation (25-2)

$f_m = ft\ N_s\ n$

$V = 125$ ft/min = Ns rev/min (π 5 in/rev)(ft/12 in)

Ns = 95.5 rpm

f_m = 0.006 in/tooth (95.5 rev/min)(8 teeth/rev) = 4.58 in/min

9. MRR = W d fm = (2)(0.5)(4.58) = 4.58 cu.in./min.

Up milling is shown in Figure 21-5.

10. $N = 12\,V / \pi\,D = (\,12\,)(\,500\,) / (\,3.14\,)(\,6\,) = 318$ rpm

$f_m = n\,N\,ft = (\,8\,)(\,318\,)(\,0.010\,) = 25.44$ inch/min

$CT = (L + \text{Allowances}) / f_m$ where Allow $= \{\,35\,(\,6 - .35\,)\,\}^{1/2}$
$CT = (12 + 1.4) / 25.44 = 0.53$ min

This cutting time is considerably less due to the high cutting speed for carbide cutting tools. The MRR is greater than for face milling with HSS tools.

Case Study: no case study

CHAPTER 26

Review Questions

1. The feed is built into the teeth of the broach -- the rise per tooth is the feed. It is also as close to orthogonal machining as one finds in industry.

2. The saw blade has no “step” or rise per tooth between successive teeth, so a saw blade is not a broach.

3. These machines use straight line movement and the feed is built into the tool, so the machine tools are much simpler, mechanically speaking.

4. Why broaching is suited for mass production -- Accuracy and precision are built into the process. No machine adjustment is needed after the initial setup. The rapid, single stroke or one pass completion of parts leads to easy A(2) or A(3) levels of automation. Roughing and finishing are built into the same tool.

5. The pitch or the distance between each tooth. This is needed to determine how long the broach must be to remove the material. See question 6.

6. Because all metal removal (depth of cut) is built into the tool, the design of the tool must relate to the amount of material to be removed, chip thickness per tooth, tooth-spacing (pitch and gullet size), and the length of available stroke in the machine.

7. Methods for reducing force and power requirements in broaching are rotor-tooth design, double-cut construction, and progressive-tooth design .

8. The rotor-tooth broach would be longer.

9. In designing a broach, the distance between the teeth (the pitch) and the shape of the gullet (the radius) must be such that the chip can be fully contained and allowed to curl properly, so that the chips do not rub the machined surface.

10. Since the entire surface is machined in one pass, the operation is very fast without resorting to high cutting speeds. High speed would consume more power and also generate more heat, thereby greatly shortening the life of the broach. Because these tools are usually quite expensive, they must have a long life to make the cost per part low and the entire process economical.

11. Shell-type construction reduces the cost of the broach because the main shaft can be made of inexpensive steel, and also the shaft can be used with various sizes and types of shells. Also, worn or broken teeth can be removed and replaced and the entire broach does not have to be replaced.

12. Because the cutting speeds are low, carbides are not needed. In addition, the cutting

forces tend to put the broach tooth geometries in tension, where carbide is not as strong and reliable as steel. Carbides and ceramics can be used for the burnishing rings (i.e. finishing teeth).

13. TiN-coated HSS broaching tools will cut with less power and lower forces because of the lower tool/chip interface friction condition. The lower interface friction condition produces larger shear angles and lower shear forces. The TiN-coated tools also last longer.

14. It is easier to feed pull-up machines, and the work falls free after the operation is completed.

15. The roughing teeth are shorter and varying in height. In finishing broaches the finish teeth are of the same height.

16. No. There would be no place for the chips to go, and the first tooth on the broach would have to be full size, permitting no feed being built into the tool.

17. Such sockets usually have a recess, larger than the finished size of the broached hole, beyond the end of the surface to be broached. Such recesses can be made by forging, casting, or machining.

18. Sawing is relatively efficient because only a small amount of material is formed into chips.

19. (1) Tooth spacing controls the size of the teeth, (2) the spacing determines the space into which the chips must be contained, (3) tooth spacing determines how many teeth are in contact with the work (cutting) at a given time. Tooth spacing is the same as pitch in broaching.

20. The tooth gullet is the space between the teeth. It must be large enough to hold all the chips from a single pass over the workpiece.

21. “Set” is the manner in which the teeth are offset from the centerline of the saw blade so as to produce a cut that is slightly wider than the thickness of the blade. The width of the cut is called the "kerf". See Figure 26-12 and 26-13.

22. Set is the offset of the tooth corner from the plane of the saw surface, Figure 26-12. Cutting at the tooth corners determines the kerf and so kerf is determined by saw thickness and set. In the ideal case for a straight set saw (Figure 26-13) the kerf is equal to the saw plate thickness plus twice the tooth set.

23. If the band were hardened throughout its width, it would be brittle and would break when flexing around the guide wheels.

24. Circular saws are limited in the depth of cut that can be made with them. Also they

are more expensive than bandsaws. Advantages: they can be made stronger, more accurate cuts can be made, and they have teeth made from a variety of cutting materials.

25. Bandsawing machines can operate at higher cutting speeds and cut continuously (no reciprocating) and are thus able to make the same cuts faster than hack saws.

26. A hole is drilled into the workpiece. The bandsaw blade is broken, inserted into the workpiece, and welded. The cuts (holes) are then made. The blade is broken and removed. This process is good for small volumes of parts.

27. The machining time Tm is the distance the saw edge moves divided by the rate of movement.

Tm = distance / speed

For a horizontal saw cutting a 3 inch diameter round section with downfeed rate of f_d

$Tm = 3 \text{ in} / f_d$

The downfeed rate is probably not known with any precision.

Attaching a value to the feed rate is difficult. If there is a power feed on the saw then the feed rate can be set to a specified value. Establishing the value is not straightforward. The cutting speed along with the feed rate will determine cutting forces, cutting zone temperature and tool wear. Starting with a desired tool life the effects of cutting speed and feed rate would have to be determined and the feed rate set. The length of cut along the work varies over time since the saw is moving through a circular cross section. This means that the best feed rate will vary during the process.

If the feed is provided by gravity (or gravity and an additional load) the estimation of the feed rate is even more complicated. A force balance can be set up in which the downward gravitational force is balanced by the cutting forces. In a two-dimensional model the cutting force and thrust force act to separate the work material and balance the gravitational force. It seems unlikely that the force situation could be modeled accurately enough to be able to predict the rate of advance of the cutting edges in the feed direction into the work material. And, the net force and perhaps forces at each tooth vary during cutting since the length of work being cut varies since the workpiece has a circular cross section.

28. If feed is by gravity, the feed force is constant. As the cut proceeds, the length of the cut increases. The force resisting the feed increases in proportion to the length of the cut. Thus, the feed rate slows down and speeds up in proportion to the diameter of the round bar.

29. The file is much wider than the saw blade and the teeth may have negative rakes, but these are the only real differences.

30. A safe edge on a file means that the file has no teeth on the edge. The user is less likely to be injured while using it and metal won't be filed from undesired locations.

31. On a band filing machine, the cutting motion is continuous, i.e. no reciprocation.

32. The teeth on a rasp-cut file are formed by being plastically deformed outward from the body of the file, whereas those of other types are formed by cutting.

33. In a shaper, the tool reciprocates and the work feeds perpendicularly to the tool motion. In a planer, the work reciprocates and the tools feed perpendicular to the work movement. Both make straight line cuts. Shapers are best suited for flat surfaces on small workpieces in small quantities as in the tool room or for special one-of-a-kind jobs. Planers are used for large workpieces. Because the workpieces machined on planers are large and heavy, it is difficult to reciprocate the work and table rapidly and to block the workpiece so as to hold them against the high acceleration and deceleration forces occurring at the ends of the strokes. It is good practice to cut on a shaper with as little overhang of the ram arm as possible. The arm is a moving cantilever beam and the cutting forces will greatly increase the amount of deflection in the arm as the length of overhang is increased. The planer does not have the cantilever beam design of the shaper, so it can make long straight cuts without suffering deflection problems, and therefore can take advantage of the cutting time saved.

34. Shaper feed is in millimeters or inches per stroke, while milling is in inches per tooth. In shaping, the cutting time is relatively slow and the setups, while usually simple, can take as long as the setup on a milling machine, which will have a faster cutting time. Thus, milling is generally able to show an economic advantage over shaping and has about the same or better precision. See Problem 6 in Chapter 25.

35. On planers, two tables are often used, so one is being used while the other is machining. On planers, the setups and cuts are designed so that cuts are made during both the forward and return strokes, while on shapers, cuts are made only on the forward stroke and feed occurs after the tool has returned. (On both shapers and planers, feed is in inches per stroke.) on planers and shapers, the table cannot be reciprocated at high speeds, so cutting speeds are relatively low and cutting time is large. On planers, simultaneous cuts can reduce the cutting time. These methods cannot be used on a shaper.

Problems:

1. The length of the cut times the feed is 12 x 0.0047 = 0.0564 cu.in. per gullet. This would be the minimum cross section of the gullet. The gullet would have a larger cross section than this to allow the chip to curl.

2. The formula used to estimate the pitch is an empirical expression based on English units, the metric units must not be used. $P = (Lw)^{1/2} =$).35 (17.75 $)^{1/2}$ = 1.47 inches. The number of teeth needed is 0.25 / 0.004 = 62.5 teeth. The length of the roughing section is then 63 (147) = 92.6 inches.

3. For gray cast iron, HP_s = 0.5 HP/ cu. in./ min

10 m/min = 32.75 ft/min
The horsepower needed per tooth:
HP = HP_s K MRR = .5 (12) (0.004) (3) (32.75)
HP = 4.716 horsepower

The number of teeth in contact: = 17.75 / 1.47 = 12

The maximum HP is = 12 x 4.716 = 56.59 hp, a rather large value, suggesting that the broach be redesigned if the machine does not have sufficient horsepower.

4. The approximate force per tooth can be estimated by:
HP = Fc V/ 33,000. Therefore, $F_c \simeq$ 4.716 **(** 33,000) / 32.75 = 4752 lbs per tooth.
For 12 teeth, this requires 57,024 pounds. This is very large. The student should be concerned.

5. The cutting speed selected should be around 55 m/min. = 180 ft/mm. The pitch is 0.05 inch or 0.00417 ft.
The number of teeth which pass over the workpiece per minute =180 / 0.00417 = 43165.5 teeth/min.
The CT = 6/ (43,165.5)(0.0001) = 1.39 min with no allowances.

6. Allowable pull = (A_{min})(Y.S.) / S where S = factor of safety
Allowable pull = ((πD^2 / 4 - DpW)(200,000)/ 1.25
where DpW = the area of the slot in the pull end.

7. First determine the Stroke Ratio, R_s = 200 / 360 = 0.55
N = 12 V R_s *I* 2 1 where we let 1 = 2 L to allow for overrun at both ends of the stroke and allow the ram to reach full cutting speed before it enters the workpiece
N = 12 **(** 25)(0.55) / (2)(4) = 165/ 8 = 20.6 rpm or 20.6 bull wheel strokes per minute

Cutting time = CT = W/(N_s f_c) = 7/(20.6 x.1) = 3.39 min.
Note that shapers are rather slow.

Metal removal rate = MRR = L w t / CT = [(4)(7)(0 .25)] / 13.39 = 2.06 cu. in./min.

8. R_s = 0.55; N_s = 11.78 for 1 = 7 inches; CT = 3.39 minutes Thus, this setup does not take less time, but requires a much greater overhang on the ram and a possible loss of accuracy and precision due to deflection.

N_s = 12 V R_s / (2 1) = (12)(25) (0.55) / (2)(7) = 11.78
CT = w / (N_s f_c) = 3.39 min

9. Let V_{avg} = average velocity of the ram produced by N rpm of the crank with a R_s stroke ratio.
V_{avg} = distance / time = length of stroke / time of stroke
V_{avg} = 1 in / [(1/Ns)(R_s) min

Since $V = 2\ V_{avg}$

$V = (2)(1)(Ns)$ ft / $(12)(R_s)$ min

10. For $R_s = 220 / 360 = 0.611$

$N_s = [(12)(120)(0.61)] / [(2)(10)] = 43.92$ strokes/min

or $N_s = [(6.11.1)(36.6)] / [(2)(254)] = 44.03$ (metric units)

where $611.1 = R$ (1000 mm/meter)

so, $N_s = 44$ strokes/min

11. $N_s = (12\ V\ Rc) / (2\ 1)$ but $R_5 = 2/3$ for hydraulic shapers with a 2:1 cut to return ratio and = L + 1 inch allowance instead of 2.

Therefore:

$N_s = 8\ V / 1 = [(8)(150)] / (8 + 1) = 133.3$ strokes/min

$CT = W/(Ns\ f_c) = 10 / [(133.3)(0.020) = 3.75$ min.

12. MRR = L W t / CT = (10)(8)(0.25) / (3.75) = 5.33 cu.in./min.

13. Assuming gray cast iron has a specific horsepower of 0.30 HP/ cu.in./min,

$HP = HP_s$ (MRR) = (0.30 hp/in^3/min)(5.33 cu.in./min) = 1.59 HP

14. Power available = Power required for machining

10 hp (0.75) = (0.67 hp / in3/min) (material removal rate)

7.5 hp = (0.67 hp / in3/min)(0.25 in)(180 ft/min)(12 in/ft)(doc)

doc = 0.021 in

15. Planing: Problem Definition: For a one tool planer, cutting occurs and then a return stroke, say at the same speed. The planing action starts off the edge of the workpiece (say 25 mm, which is related to the tool size) and moves off the other edge. So the "surface machined" is (25 + 305 + 25) mm wide. The tool moves the length of the work piece (305 mm) and returns so there are two stokes per each cutting pass. Tool acceleration to cutting speed and deceleration and reversal times will be ignored. There is an allowance at both ends, say 1/10(workpiece length) = 30.5 mm. The length of travel is then 2(366 mm) per cutting stroke. The tool is fed across the workpiece at 6.35 mm/stroke. Cutting speed is 180 ft/min = 55 m/min.

Machining time =(time per tool pass)(number of tool passes)

Process parameters

work length plus allowance = 366 mm

tool travel per feed step = 2(366 mm) = 732 mm

time per feed step = time per stroke = travel / cutting speed

= 0.732 m / 55 m/min = 0.013 min = 0.8 sec

number of feed steps = (width of cut surface + allowance) / feed per stroke

number of feed steps = (355 mm / 6.35 mm/stroke) = 56 strokes

Tc = (56 feed steps)(0.8 sec/feed step) = 45 sec

Milling: Process: A more than 305 mm = 12 in long peripheral milling cutter seems unreasonable, so a face milling operation, Figure 25-2 is planned. The realistic choice is probably use of a large diameter, carbide insert face mill, Figure 25-7. The work can be machined on both forward and return passes.

Since the problem asks for comparison of machining times for high speed steel, an 8-cutting edges, 4 inch diameter face mill will be used with HSS inserts. The central issue is choice of bite per tooth. Table 25-1 suggests feed of 0.005 – 0.015 in/tooth and cutting speed of 60 – 100 ft/min. Choosing central values of chip load of 0.010 in/tooth and cutting speed of 80 ft/min and

- mill step over distance is typically 1/3 –1/2 cutter diameter, choose 1/3 diameter,
- indexing (step over) time between cutting passes is at rapid traverse speed and will be ignored,
- allowances at each end of work are 1.5(cutter diameter),
- cutter starts off end of work by 1.5(diameter) and is set for initial pass so cutter axis is set for a 1/3(diameter) first pass and 8 passes are required, i.e., 12 in / (4/3) in/pass less the starting point position that is one step over,
- to pass completely off of work 3 additional passes are need, i.e., 1/3(diameter) step over,

T_c = length of tool travel / table speed

length of tool travel = (length per pass)(number of passes)

length per pass = work length + 2 (allowance)

length per pass = 12 in + 2 [1.5 (cutter diameter)

length per pass = 12 in + 2 [6 in] = 24 in

number of passes = 11

length of tool travel = (24 in/pass)(11 machining passes) = 264 in

table feed speed, v, for the selected bite per tooth

For the 8-edge cutter and bite per tooth = 0.010 in/tooth

(table speed)(time for 1/8 revolution) = 0.010 in/tooth

$(v) [(1/8 \text{ rev/tooth}) / (N \text{ rev/min})] = 0.010$ in/tooth

$V = N \text{ rev/min} (\pi 4 \text{ in/rev})(\text{ft}/12 \text{ in}) = 80$ ft/min

$N = 76.4$ rpm

$v [(1/8 \text{ rev/tooth}) / 76.4 \text{ rev/min})] = 0.010$ in/tooth

$v = 6.1$ in/min

Time per pass = 24 in / 6.1 in/min = 4 min which is much larger than the planing stroke time of 0.8 sec.

T_c = 264 in / 6.1 in/min = 43.3 min

Case Study: “The Socket with the Triangular Hole”

After getting over your initial reaction to "who the heck designed this part?" and "I don't think that this part can be made!", you would find that there are really many ways to make the part. Clearly, it could be made by powder metallurgy or investment casting. It could be made in two pieces -- a flat disk and cylinder with a broached triangular hole -- with an appropriate joining process, perhaps friction welding. The hole could be machined into the cylinder by EDM, ECM, or ultrasonic machining. With the latter three approaches, a hole should initially be drilled of a diameter about 5 and 1/2 mm in the center of the cylinder. Two EDM tools are used: a triangular hollow tool followed by a solid triangular tool to finish the hole to size. One might want to follow initial drilling with end milling, to make the initial hole flat bottomed. Drilling and milling before EDM, ECM, or ultrasonic will greatly enhance the overall processing time.

If you can get the designer to relent a bit on the 0.8 mm radius, you can use the Watts method of drilling angular holes. The Watts method consists of a Watts Patented Pull-floating Chuck, Angular Drill, and Guide Plate and is kind of a Wankel engine that machines. Triangular, square, and hexagonal holes

can be drilled on conventional lathe, mill, or drill press equipment. Again, a regular round hole is drilled first in harder metals as a lead hole, but this probably won't be necessary of aluminum is selected as the metal for the part. These tools are sold by the Watts Bros. Tool Works, Inc., Wilmerding, PA.

It may be possible to make this part by backward impact extrusion, since the material is aluminum and the part is not that large. The final selection as to which processes are most economical would likely come down to impact extrusion, powder metallurgy, and investment casting. The quantity here is quite large and all of these processes can be automated. Die life may be a problem for impact extrusion because of the small radius that will have to be placed on the punches to get those 0.8 mm corners .

CHAPTER 27

Review Questions

1. Abrasive machining processes. Grinding, honing, lapping, and ultrasonic machining are four processes that use abrasive grits for cutting tools.

2. Attrition is caused by the dulling of the edges and flattening of the grits, and the glazing of the wheel surface that is caused by the abrasive wear action of the grits. The grits are pulled out of the surface of the wheel as the forces on the worn grits increase.

3. Friability is the ability of the grits to fracture and expose new cutting edges, which results in more cutting surfaces continuously becoming available.

4. The smaller the grit size, the better the surface finish.

5. Both are quite hard, but aluminum oxide is tougher than silicon carbide, and is less reactive with materials. Therefore, it is the more general purpose abrasive.

6. CBN is harder and does not react with certain work materials at the elevated temperatures of grinding (particularly steel).

7. The common bonding agents are vitreous ceramics, plastics, rubber, and silicate of soda.

8. Grade expresses the strength of bonding material. It controls how freely grits will pull out of the wheel – the stronger the bond, the more difficult it is for grits to pull out of the wheel.

9. Structure refers to the spacing - how far apart are the abrasive grains. An open structure has widely-spaced grains compared to a dense structure. Either structure could use a high strength bonding material.

10. In crush dressing, the grains in an abrasive wheel are crushed, oz broken, by means of a hardened roller, to expose sharp edges and, usually, to impart a desired contour to the wheel. It is the easiest practical way to impart a desired contour to an abrasive wheel. See Figure 27-14.

11. A glazed wheel is one in which the grits are worn flat and polished; whereas, a loaded wheel is one in which chip material has packed in between the grains so that the entire surface of the wheel is smooth, rather than just the tops of the grains.

12. Grinding is a mixture of cutting, plowing, and rubbing processes, all occurring at different places at the same time. Grits with large negative rakes may just plow a groove in the surface rather than form a chip. Other grits may simply rub or burnish the surface (depth of cut very small or cutting edges very rounded or worn) . The grits that are

making chips do so in exactly the same manner as a single point cutting tool.

13. In dressing a grinding wheel, dulled abrasive grains are broken (thereby exposing sharp edges) or are pulled from the wheel to expose new grains.

14. In abrasive machining, heavy feeds and large abrasive grits are used to rapidly remove material. Cutting dominates the process but, fundamentally, it is not really different from grinding.

15. The grinding ratio is the ratio of the volume of metal removed versus the volume of wheel lost (abrasive material used) or worn away (attrition).

16. Feed is controlled by tilting the regulating wheel. The angle of inclination provides a force in the feed direction. The part feeds at
$F = dN \sin\theta$ (Equation 27-1)

17. There must be spacing between the grains to make room for the chips. To a certain extent, spacing or structure, along with the grain size, also dictates the surface finish.

18. The cutting fluid carries away the chips and keeps the workpiece and grinding wheel cool. The very high grinding speeds convert considerable energy into heat energy. The grinding area is very limited and the localized heating can easily damage the workpiece .

19. The wheel is fed radially into the rotating workpiece.

20. The dust resulting from grinding contains fine, hard abrasive particles which can become airborn and get embedded in the softer, moving parts of other machines, causing these parts to act as laps, which thereafter would ruin the accuracy of the machines. In manufacturing cells, where grinders are often placed near other machines, it is important to put good dust control devices on the grinders and use lots of cutting fluids.

21. The purpose is to produce a surface which is free of residual stresses or a surface in which tensile and compressive stresses are nicely balanced. Cutting results in residual tension, while rubbing and burnishing produce residual compression.

22. Wheel speed is reduced, the down feed is reduced, and sulpherized cutting oil is used for low stress grinding. See Figure 27-11.

23. The larger the grains, the fewer that can be packed into a given area, so on the average, fewer grains will contact the workpiece during a pass.

24. Centerless grinders are faster, have better work support, require very little operator skill, have the possibility of continuous infeed, give excellent size control, and can be automated with regard to part loading and unloading. wheel adjustment for wheel wear can be automatic as well.

25. Electron microscopes are roughly analogous to light microscopes with electrons, rather than light, used to create the image. This requires an electron source, electromagnetic lenses and operation in vacuum. In scanning electron microscopy secondary electrons emitted from the surface under observation are used to form the image. An explanation of these general ideas is provided at *www.mos.org/sin/sem/intro.html*

26. The grinding forces are much lower than the forces used in milling and usually are directed downward into the vacuum chuck. Killing has larger forces, and the force may be directed up, away from the vacuum check, as in up milling.

27. The typical grinding operation makes many passes at very small depths of cut and relatively large feeds. In creep feed grinding the depth of cut is large, the feed is very slow, and the cut is often made in one pass over the workpiece. Creep feed grinding is grinding at very slow feed rates. See Figure 27-20.

28. In lapping, the abrasive grits become embedded in the soft material of the lap. This is referred to as "charging the lap". The material to be lapped is machined or rubbed by the abrasive grits, not the soft material of the lap.

29. In honing stones, additional materials, such as sulfur, resins, or wax are added to the bonding agents to modify the cutting operations. The grits themselves are very fine or small.

30. "Charging" a lap is loading it up with abrasive materials.

31. Honing is intended to smooth and size the hole, not to alter the position or angle of the axis, so a rigid setup is not what is desired in this tool.

32. In most coated abrasive belts, the abrasive grains do not pull out so as to expose new, sharp grains. They thus have no self-sharpening action.

33. The chips are small, of the same order of size as the abrasive grits. So, the bottoms of the individual chip slid on one abrasive grit. If the bottom of the chip appears smooth it is because the abrasive grain surface was smooth or the resolution of the microscope was insufficient to show the features on the chip bottom surface.

With the 4800x magnification including enlargement of the photograph from the original micrograph the chip thickness is a measured chip thickness on the photograph divided by 4800. The upper left potion of the chip labeled “T” shows the top and side of the chip. The chip thickness in the photograph is about 7 mm and so the actual chip thickness is about 0.002 mm = 2 μm.

34. The angle is a function of the rate of rotation (rpm) of the honing head versus the rate of oscillation.

35. Four major causes of grinding accidents are:
a) operating at too high of a rpm.
b) operating a wheel that has been dropped or struck so as to produce a crack
c) operating the wheel improperly
d) operating the wheel with the safety guards removed.

36. A surface grinder resembles a horizontal spindle milling machine.

37. A residual stress is a stress that is left in a piece of material after external loading is removed from the material.

38. Infeed and crossfeed usually refer to surface grinding operations, Figure 27-19. Infeed is the distance that the wheel is advanced into the workpiece in the direction perpendicular to the work surface. Crossfeed is the distance that the wheel is traversed parallel to the work surface and perpendicular to the infeed and grinding directions between grinding passes.

Problems:

1. a) The wear of the stairs is produced by the hard particles of material embedded in the soles of people's shoes. The leather or rubber soles are softer but act as laps, charged with fine grits of abrasives. The bottom of the stairs are nearest the outside.
b) The grits get dull as the stairs are ascended so less stair wear occurs at the top than the bottom. Grits are removed from the soles while ascending. Soles get charged while walking outside the building, not inside the building.

2. The small particle will tend to have fewer defects (dislocations) per unit volume and will thus act stronger. The small particle may also be more work hardened than the bulk material.

3. In surface grinding, the MRR is controlled by the table feed, V_w. See Table 27-5.

For a 1-inch wide wheel removing 0.004 inches of metal,
MRR = (12) (150) (0.004) (1) = 7.2 in^3/min.if the entire face of the wheel were engaged.

However, the wheel is crossfed over the workpiece at a rate of 0.060 in per pass, so the MRR = (7.2)(0.060) = 0.43 in^3/min.

Generally speaking, MRR's in grinding are an order of magnitude less than other multiple-tooth machining processes.

Case Study: “Aluminum Retainer Rings”

Several possibilities exist here:

One method might be to purchase tubing with the correct internal diameter or wall thickness (if possible) and slice the rings of f the tube with a sawing or cutoff operation. This would be followed by a milling operation to cut the opening in the ring. A tumbling operation might be needed to eliminate sharp edges and burrs on the ring. If tubing of the proper size cannot be located and additional machining of the OD and ID are needed, this method will not be the most economical.

A very economical procedure would be to purchase this material (5052 aluminum half hard) in a wire form, and convert the wire into a rectangular shape by pulling it through a device called a Turks Head. A Turks Head is a roll forming device with four rollers which form the four sides of the needed rectangle. The wire would thus be given the 1.60 x 2.36 cross section. Next, a round mandrel would be made. The mandrel diameter would be something less than the 89,71 ring diameter. The rectangular wire would be wound up on the mandrel like a big spring, forming a continuous coil. This operation would be done on a lathe and could provide the pulling means to pull the round wire through the Turks Head. The mandrel, with the coil clamped in place, is then placed in a milling machine and a slitting saw is used to form the individual rings. Some calculations (regarding springback) and experimentation would be necessary to determine the correct diameter of the mandrel and the width of the slitting saw so that, when the coil is cut, the individual rings will come out with the appropriate diameter with the correct opening.

If an extrusion press is available, the square wire can be formed by extrusion, since a rectangular extrusion is fairly easy to do in aluminum, and the dies might not be overly expensive. However, if the die costs exceed $500, it would be advisable to go to the Turks Head method, as Turks Heads do not cost much more than this and can be adjusted and used for other applications at a later time.

CHAPTER 28

Review Questions

1. Four types of NTM processes are: chemical, electrochemical, mechanical, and thermal.

2. The materials used in the future will be harder and stronger, making traditional machining more difficult. A large amount of energy in metal cutting goes into heat which can cause damage to the material of the part. Delicate workpieces are extremely difficult to machine by traditional methods.

3. Material removal rates on Nontraditional machining processes are typically much lower than in conventional metal cutting with some notable exceptions. The exceptions are when MRR = volume removed / time = (penetration rate)(area being machined) becomes large due to very high penetration rates or, more likely working of a large area. For example,
- in cutting operations where penetration rates may be comparable to or larger than mechanical processes such as sawing, and
- in processes with small penetration rates but that act over large areas such as is possible in electrochemical milling.

Material removal measures are given in Table 28-1.

	Feed rate (mm/min)	
Process		
Chemical milling Photochemical milling	0.013 – 0.076	MRR = (penetration rate)*(area)
Electrochemical machining	2.5 – 12.7	MRR = (penetration rate)*(area)
Abrasive-jet machining	76	
Abrasive waterjet machining	15 - 450	MRR = (penetration rate)*(area) area ~ kerf -> small
Ultrasonic machining	0.5 – 3.8	small penetration, small area
Waterjet machining	250- 200,000	high penetration, small area
Electrical-discharge machining	0.5	MRR = (penetration rate)*(area)
Electon-beam machining	30 - 1500	very small area
Laser-beam machining	100 - 2500	small area
Plasma arc cutting	250 - 5000	high penetration, kerf can be large
Wire electrical discharge machining	100 - 250	MRR = (penetration rate)*(area) area = wire-work area -> small

4. The six basic steps are: (1) preparation of the artwork, (2) photographic production of

the negative, (3) application of the emulsion to the workpiece, (4) exposing the workpiece to light passing through the negative, (5) developing the exposed workpiece, and (6) application of the reagent to the workpiece.
In chemical milling, one often wants to selectively etch certain parts of the material. The material is coated with a coating, called a resist, which, when exposed to certain wavelengths of light, chemically changes and hardens or sets. The unexposed region can be washed away, leaving an exposed region which can be chemically milled or etched. The resist or mask protects the rest of the surface. This technique allows for complex, minute, detailed masks to be developed. The technique is used in microelectronics.

5. Spraying continuously washes away the debris and keeps the process progressing evenly.

6. Very thin parts can be blanked.
Parts with varying thickness can be blanked.
Many parts can be blanked at the same time.
No press or expensive die sets are needed.
No tools to wear out.

7. The area having the greatest depth is exposed to the reagent first. Next the resist is removed from the area having the next greatest depth, and the work is again exposed to the reagent. This step-by-step procedure is repeated as often as desired.

8. No. The ratio of the depth to width is too great.

9. The width of the groove = width of the maskant + (213) depth. The width of the mask should therefore be 21 mm.

10. Yes, but not very satisfactorily. There would be too much variation in the geometry and metallurgy in and adjacent to the weld.

11. Tapered sections are produced by slowly withdrawing the workpiece vertically from the chemical bath.

12. Deburring by vaporizing burrs and fins on cast and machined parts.

13. ECM is not really related to chemical machining since ECM is a deplating process that utilizes an electrolytic circuit with an external power supply.

14. Hardness is not a factor in ECM and should have no effect on MRR.

15. The current density in a material is obviously a function of the geometry of the part. Small projections, corners, and things like burrs will have a current density which is higher than the bulk regions. The MRR is a function of the current density. The higher the current density, the faster the MRR. Thus, geometries like burrs preferentially etch faster.

16. There is no tool wear to speak of in ECM as the tool is protected cathodically during the process. There may be some chemical reaction between the tool and the electrolyte when the power is off, depending upon the materials involved.

17. Shaped-tube electrolytic machining is similar to electrochemical machining and electrostream drilling in that the same material removal process is used – electrochemical action. It is different in the tooling used to deliver the electrolyte to the material removal area. In STEM the electrolyte is delivered in a very controlled way to the working area by use of a tube.

18. ECG is not suitable for grinding ceramics because they are not conductors. Ultrasonics can be effectively used to machine ceramics, but the process is quite slow (low MRR).

19. The MRR in ECM depends mainly upon the current density which is influenced by the geometry of the tool. For example, the current density at sharp corners will be greater than flat surfaces, so corners will cut faster.

20. The amount of material removed is a function of exposure time. As the tool advances down into the work, the sides of the tool would continue to machine the sides of the hole, giving it a taper (largest at the top) which in this case is not desired. Thus, the tool is insulated to prevent the passage of current.

21. In ultrasonic machining small parts of the work material are removed by coalescence of fractures cause by the impact of the abrasives on the work, and a small amount of ductile chip formation where very small depths of cut (deformation zone size) occur. If chips are viewed as the result of (ductile) shear deformation as in metal cutting then ultrasonic machining is chipless. If chips are viewed as an identifiable particle from the workpiece then ultrasonic machining produces chips.

22. The acceleration is greatest at the ends of the stroke so the forces acting on the grits in the slurry are greatest here as well. Actually, the grits in the slurry are driven by the wave action of the vibrating tool against the workpiece. The tool acts to focus this wave action into the desired regions.

23. The surface is heated by the sparks to either melt or even vaporize metal. The melted metal is washed away by the dielectric. The sparks cut small, spherical shaped, cups into the surface. The surface is covered with recast (melted and resolidified) metal. Thus, there will always be a hard, brittle, surface layer on EDM part surfaces.

24. The moving wire electrode can cut straight or angled slots through plates under CNC control. The thin wire allows relatively complex geometries to be cut into dies and stripper plates, for example, with virtually the same program being used to make parts which will later mate with the die set. The principal advantage is that it can produce "saw-like" cuts in hard, delicate materials which would be difficult to bandsaw. There are

no tool forces on the wire. A hole can be drilled in the part and the wire passed through the hole.

25. The effect would not be great. The MRR is controlled by adjusting the amperage (higher amperage, higher MRR) while the surface finish is controlled by the frequency of the spark (higher frequency with amperage constant yields smaller craters and smoother finish).

26. ECM is probably preferred to EDM in this case because the recast layer produced by EDM may serve as a source for fatigue cracks in the already brittle base material.

27. Of the four processes, laser beam machining is the easiest to automate into large volume production provided the laser can do the job. Lasers leave recast surfaces like EDM. Both ECM and EDM can be automated but are more oriented toward batch processes. If the parts are small and a large number can be loaded into a machine at the same time, EDM or ECM could be used, with ECM holes having less damage and EDM usually having slightly faster MRRs in most materials. LBM and EBM have very low MRRs which may exclude them from large volume production.

28. Again, LBM is good for small holes in hard metals and since they are being used for venting, the recast layer should not be a problem. The low MRR rate may make for long machining cycles, so ECM may be preferred. EDM is not preferred for small holes.

29. Specific power may be high for LBM because the spot area or volume is very small and the coherent beam energy is very large.

30. The spark in an EDM process literally blasts molten metal out of the crater. These globs of material try to assume the lowest energy state which is spherical. They cool from the outside to the inside, so the inside can form a shrink cavity, making the spheres hollow. The spheres may also trap gases to make them hollow.

31. In waterjet cutting a high speed stream of water is used. This requires machines to generate high pressure, pumps to move the fluid, the flow of water through piping at high speed, and a high speed stream leaving a nozzle (Figure 28-16). These are all sources of noise.

32. In abrasive waterjet cutting nozzle wear occurs due to the interactions of the abrasives and the nozzle. Wear can be minimized if abrasive-nozzle contact is minimized (few particles and low contact stress) and if the speed of the abrasives through the nozzle is small. One way to accomplish decreased nozzle wear in to use controlled streams of water to keep the abrasives away from the nozzle wall and to inject the abrasive particles into the central part of the water streams.

33. Abrasive flow machining appears to be useful for finishing internal passages in engine blocks AFM is useful for finishing complex, internal, difficult-to-access regions of parts. However, the AFM process will become very complicated since there are so

many openings that need to be closed, different kinds and size passages and so large variations in media pressure and long passages and so large media pressure drops in cylinder blocks.

34.Thermal deburring is a process in which a hot, corrosive gas is directed onto a burr and the burr is removed by vaporization. Part of the deburring process is due to chemical action, oxidation of metals, breakdown of the chemical bonds of thermosetting plastics. While thermoplastics have low thermal conductivity the increase in temperature will have a less severe effect on the material. Thermoplastics are characterized by a glass transition temperature that indicates gradual changes in molecular behavior. Rather that breaking the material down chemically thermal deburring is expected to cause a softening of the material, and not only in the burr but also in the surrounding material.

Problems: no problems

Case Study: no case study

CHAPTER 29

Review Questions

1. The work holding device locates the part in the machine tool with respect to the cutting tools and holds the part (clamps it) so it does not move due to cutting forces or inertial forces.

2. A jig determines location dimensions while a fixture does not. A fixture is a special workholding device -- that is, specially designed to accomplish a specific job. Jigs have the layout of geometric shapes built into them, and thus they automatically transfer this layout to the workpiece as operations are performed with their use.

3. The definition was incorrect, in that some jigs do not hold the work (as in clamp-on jigs), and some jigs do not guide the tool (as in welding jigs). Welding jigs are used to locate one (or more) parts with respect to another part and hold them in the right orientation and location while welding is performed.

4. A vise is a general purpose workholding device and is not a specially designed workholding device. This answer may sound picky but it is important to distinguish between a vice used in general purpose milling and a fixture used in a milling machine. Why? The latter may have many special features designed into it to enhance or speed up production, reduce setup time, or reduce time to load or unload parts. The fixture may have a pokayoke built into it, meaning that it cannot be operated if parts are loaded into it incorrectly (pokayokes prevent defects from occurring - See Chapter 43).

5. Some basic factors in designing jigs and fixtures are: (1) clamping the work to resist the cutting forces; (2) supporting the work during cutting so that it does not deflect under the load of the cutting forces; (3) location to provide the desired dimensional control; (4) guidance of the tool, if required; (5) provision for chip removal or clearance during or after operation; and (6) rapid, easy, safe operation.

6. The critical surfaces (often 3 perpendicular planes) are surfaces on the part that are vital to the parts function or operation. Other surfaces are dimensioned from the critical surfaces, and these surfaces are established early in the processing sequence.

7. The clamping forces can distort the workpiece. The workpiece is machined in the distorted configuration. When the clamping forces are removed, the workpiece returns to its unstressed shape, but now the machined surface is distorted and the dimensions produced by the machining operations will be incorrect .

8. Three points are required to locate the workpiece in one plane. Two points are required to locate the workpiece in a second plane, perpendicular to the first plane. One point is required to locate the workpiece in a third plane, perpendicular to the first two.

9. Supporting the work against the cutting forces of the process often requires that

additional points or bearing supports be placed in the three perpendicular surfaces, beyond the 3-2-1 points .

10. Reasons for not having the drill bushings actually touch the workpiece include:
(1) Chips may become tangled in the drill bushing if there isn't sufficient clearance between the bushing and the workpiece,
(2) the end of the bushing may contact an oversize workpiece and not permit the piece to be located or held properly, and
(3) the chips will be passed through the bushing and may wear and score it.

11. Down milling pushes the workpiece down into the location surfaces, which are solid, unmoving surfaces; up milling tends to lift the workpiece out of the fixture, so clamping forces must be greater to hold the workpiece against the location points during machining.

12. Flexibility means versatility. Workholding devices can be made move flexible by making them modular, i.e., made of combinations of standard elements that are combined in different ways for use in making different parts.

13. Forces acting against the floor caused the jig to deflect, which, in turn, caused the jig to twist. By having a rigid jig with only three points of support, the jig would not twist.

14. If a machine is costly and has a high production rate, time lost in setting up and clamping a workpiece is very costly. Thus a small amount of time saved each cycle by use of a fixture easily repay the cost of the fixture. A machine that is not costly or highly productive may not offer sufficient return to pay for the same fixture.

15. Jigs that can be flipped over to permit drilling from more than one side are called roll-over jigs. They: (1) usually eliminate the cost of a second jig, (2) reduce the amount of clamping time, and (3) may reduce possible clamping error due to clamping stresses.

16. The spherical washer permits minor deviations in the parallel surface to readily be absorbed. The strap clamp does not have to be exactly parallel to the surface holding the D stud. This allows for variations in the thickness of the workpiece .

17. Strap clamps, C clamps and toggle clamps are all commonly used.

18. The strap clamps can be bought in different sizes. The letters are used in a table in the clamp catalog to define the sizes but the basic design of the clamp does not change, just the size.

19. There is no control over how many points the part will rest on if it is set on the flat plate. Plates are not perfectly flat. Using locator buttons assures that the number and location of part support points are known.

20. The X plane is the largest plane and would ordinarily take 3 buttons. However, this

would place the thrust of the drilling process for the two mounting holes outside the area defined by the three buttons. Therefore, 4 buttons are used in the X plane and the drilling thrust is inside the region defined by these 4 points. The bottom of the bearing block would be milled flat and true prior to insertion in the jig.

21. The Z location buttons establish the "A" dimension.

22. The front and back could be straddle milled first, then the base milled perpendicular to the front or back and finally the right end. The end is milled solely for the purpose of establishing dimension "B" and "C: The right end must rest against button"Y" in the jig. The base could be milled first and then the front and back milled, using the base as a locating surface .

23. The surfaces which locate the holes are milled first to properly establish dimensions "A", "B", and "C". It is more difficult to locate surfaces to be milled from surfaces that were drilled than it is to locate (and drill) holes with respect to milled surfaces. While the drawing does not say so specifically, the holes are perpendicular to the flat bottom.

24. Drill bushings (K) must be removable so the holes can be countersunk with the workpiece still in the jig. Drill bushings are made removable for any number of reasons. You may want to replace it if it wears. You may want to remove it so that the drilled hole can be reamed, tapped, or countersunk --the reamer, tap, or countersink being larger than the drill diameter. You may be drilling two holes of different diameter in the same location, so you need two different drill bushings.

Problems:

1. Same as 8th edition Chapter 28

   1. $(\$5.75 + \$4.50)(2.25) - (\$4.50 + \$4.50)(1.25) = (\$3.000 / N)(1 + (3)(0.1)/2$

   $N = 292+$ or 293 pieces

2. The cost of the jig is:

$$C_t = [\$100 + (4)(12)] / N + [\$600 / N][1 + (3)(16)/2]$$

Assuming the design and assembly costs are one-time costs and the modular elements are written off over three years;

$$C_t = \$148 / N + (600 / N)(1.24)$$

$$(8.00 + 8.75)(.5) - (6.50 + 8.75)(0.2) = 148 / N + (600 / N)(1.24)$$

$$8.375 - 3.05 = 148 / N + 744 / N$$

$$N = 892 / 5.325 = 167.51$$

The modular fixture has a lower breakeven quantity.

3. The cutting force, F_c of 1800 lb. is assumed to be going to the left, and the thrust force of 900 lb. is assumed to be going down. The clamping forces, F_R and F_L are required so that the clamps can be designed.

For a static condition, the sum of forces in the X-direction (horizontal) equals zero, the sum of forces in the Y-direction (vertical) equals zero, and the sum of moments around any point is zero.

$F_x = R_1 + \mu(F_L + F_R + 1500 + 900) - 1800 = 0$
$F_y = R_2 + R_3 - F_L - F_R - 900 - 1500 = 0$

M_A = moment about point A on left side
$= (900 \text{ x } 5) + (1500 \text{ x } 15) + (F_R \text{ x } 30) + (R_3 \text{ x } 30) - (1800 \text{ x } 34) = 0$

Let $R_3 = 0$ (assume part is barely touching) and
$F_L = 0$ (assume there is no tendency to lift on the left side).

So:
if $R_3 = 0$; $F_L = 0$

$2F_x = R_1 + 0.19 (FR = 1500 + 900) - 1800 = 0$

$2Fy = R_2 - F_R - 900 - 1500 = 0$

$M_A = 4500 + 1500(15) + F_R\, 30 - 1800(34) = 0$

$F_R = [1800(34) + 900 + 1500(15)] / 30 = 1140$ lb

$R_2 = 1140 + 900 + 1500 = 3540$ lb.

$R_1 = 1800 - .19 (1140 + 1500 + 900) = 1127.4$ lb.

4. Current cost to drill holes
1 minute machining time + 0.5 minute unload/load time = 1.5 min/part
40 parts/hr
(\$42 / hr) / (40 parts/hr) = \$1.05 / part
With toggle clamp
experiment shows advancing screw about ½ in takes about 4 sec
and working toggle takes less than 1 sec
=> part in and out of jig about 30 sec – 2(4 sec) for one screw at a time
new unload/load time is 22 sec part handling + 2 sec clamping = 24 sec
1 minute drilling time + (24/60) unload/load time = 1.4 min/part
43 parts/hr
(\$42 / hr) / 43 parts/hr) = \$0.98 / part

Cost change = \$0.07 /part

Cost to implement change
  cost per clamp = \$3.85 – catalog data
  cost to modify jig = (shop cost)(shop time) = (\$70 /hr)(7 hr) = \$490
    current University shop rate
    University shop estimate of construction time
  design cost = ?
  lost production time while jig is modified = 7 hrs + transportation and queue time = ?

Considering only purchase of clamps and jig modification cost the number of parts that must be drilled to recoup cost is (\$490 + \$7.70) / \$0.07 / part = 7,110 parts

Case Study: “Overhead Crane Installation”

This study actually involves two location problems: the location of the holes with respect to themselves and the location of the hole patterns with respect to each other. The former problem can be solved by making a simple ring jig. The jig can be secured to the column using magnets or a hole can be drilled at the point (+) on the column, tapped, and used to hold the jig plate while the bolt holes are drilled. The holes can be drilled with a hand electric drill.

The second problem, locating the drill jig properly on each column so that the hole pattern centers all come out on the same plane, is a bit more difficult. Here is one possible solution. A fine cross (+) is placed on the jig. On the day that the job is to be done, a surveyor's transit or level is set up in the center of the eight columns at the required height. A painter's scaffold should provide adequate height. When the transit is properly leveled, each column can be "shot" so that, when the jig is mounted on each column for hole drilling, the jig will always be at the same height with respect to all other columns (without regard to the floor itself).

The equipment needed would be: a drill jig, magnet, drills, portable electric drill with long extension cord, scaffold, and surveyor's level.

CHAPTER 30

Review Questions

1.The major diameter is the over-all, outside diameter of the thread. The pitch diameter is a smaller, theoretical diameter upon which all the design elements of a thread are based.

2. The pitch and lead are the same for a single-pitch thread.

3. The helix angle is the angle between the slope of the screw thread and a line perpendicular to the axis of the screw.

4. Pipe threads are made on a taper so that as the threaded joint is tightened it will form a liquid-tight joint.

5. The basic methods for making external threads are: machining (grinding), forming, and casting. In plastics, threads can be molded.

6. 1/4"-20 UNC-3A designated an external thread of the Unified, or American, form, 1/4" nominal diameter, having 20 threads per inch, and a Class 3 fit.

7. M20 x 2.5-6g6g designates a metric thread; the nominal size is 20 mm; the pitch is 2.5 mm; #6 tolerance grade and "g" tolerance position on the crest diameter. The x means "by".

8. Fine-series threads are being used less because of the wide availability and use of self-locking plastic inserts on fasteners and special locking coatings.

9. Pitch is controlled by controlling the longitudinal motion of the lathe carriage relative to the rotation of the spindle, by means of the lead screw and clamp nut. Comment on threading on a lathe: Cutting threads on a lathe is a slow and expensive process. The design should specify standard threads which can be made by the most economical process whenever possible. Can thread rolling be used? If machined threads are needed and if the threads are of standard diameter, they can be cut with a die. Dies come in standard sizes. Nonstandard size threads would require operator controlled functions and great time delay in the cycle to make the threads. This is typically how they are made on the engine lathe, but engine lathe work is only for very small lots. The use of a die allows the turret lathe operations to be performed rapidly, without adjustment. An NC lathe can do threads quickly and repeatably.

10. The threading dial assures that the cutting tool will exactly

"track" in the previous thread groove during successive cuts.

11 Figures 23-8 (not labeled) & 23-9 show threading dials.

12.The lead is built into the cutting die. It twists itself on to the shaft just like a nut.

13. The purpose of a self-opening die head is to permit the die head to be withdrawn linearly from the completed thread without having to be unscrewed from it.

14. The shape of a taper tap aids in properly aligning the tap in the hole. It is much more difficult to align a plug tap properly if it is not preceded by a taper tap.

15. If full threads are specified to the bottom of a dead-end hole, it is necessary to follow the usual plug tap with a bottoming tap, which must be used with care to avoid breaking off the tap in the hole.

16. A fluteless tap produ6es threads by plastic flow of the material, requiring a ductile material. Gray cast iron is brittle, and therefore does not plastically flow. Threads in gray cast iron must be machined.

17. If possible, have the hole drilled deeper than actually needed so that it can be threaded to the desired depth without having to use a bottoming tap.

18. A spiral-point tap projects the chips ahead of the tap, thereby avoiding chips from becoming entangled in the cutting tap. (Another reason to drill the hole deeper than the threaded portion.)

19. No, a fluteless tap forms threads progressively, thus requiring several partially formed threads ahead of the fully formed threads, therefore it can not be used to thread a dead-end hole to the bottom.

20. Yes, it is not only desirable but necessary in most materials that the cutting fluid be a good lubricant. There will be large friction forces between the teeth of the tap and the tapped hole as the tap progresses. A lubricant will also reduce the friction between the chips and the work material and the tap.

21. Threads are milled (machined) using form cutters - either single or multiple-form cutters are used. Because the cutter has multiple teeth, the thread can be fully machined in one pass of the cutter past the rotating workpiece. So this process is faster than thread turning, which

uses a single point tool.

22. By grinding, threads can be made on hardened materials and the threads will be more precise (less variability) and have a better surface finish.

23. Thread rolling is much faster than any of the machining processes and the properties of the threads are improved -- stronger and smoother. The materials to be thread rolled must be ductile and full-form threads cannot be obtained by rolling. Also, the threads will not have any sharp radius. The surface of the bar must have a good surface finish.

24. Examine the thread. Machined surfaces are very different from rolled surfaces.

25. With the involute tooth form, there is only rolling contact between the gear tooth surfaces, thus eliminating sliding friction.

26. The diametral pitch of a gear is the ratio of the number of teeth to the pitch diameter, or is the number of teeth per inch of pitch diameter.

27. The module and the pitch diameter are the same.

28. See Figures 30-14 and 30-15.

29. (1) The actual tooth profile must coincide with the theoretical profile; (2) tooth spacing must be uniform and correct; (3) the actual pitch circle must be coincident with the theoretical circle and be concentric with the axis of rotation; (4) the face and flank surfaces must be smooth and adequately hard; (5) the shafts and bearings must assure that center-to-center distances are maintained under load. Notice that most of these requirements are determined solely by manufacturing of the gears.

30. The tooth engagement of helical gears is gradual, and more teeth are in contact at a given time. This tends to provide smoother and quieter operation. (Do you think that helical gears are used in car transmissions?)

31. Helical gears cause side thrust and are more difficult to manufacture than straight tooth gears.

32. A hob has to extend past the point being cut on the gear teeth. On herringbone gears this would cause the hob to extend, and cut into the teeth beyond the centerline of the gear.

33. Full-herringbone gears can be cut only on a Sykes gear generating machine .

34. A clearance groove is machined around the center of the gear

to provide clearance for the hob, or two helical gears, having opposite helix angles, may be machined separately and joined together.

35. A different, and very expensive, broach has to be made for each size and type of gear.

36. A crown gear will mate properly with any bevel gear having the same diametral pitch and tooth form.

37. Three basic processes for machining gears are: form cutting, generating, and template machining.

38. The Fellows gear shaper uses generation, meaning the tooth profile is made in progressive passes. See Figure 31-10.

39. The feed screw of the milling machine table is geared to the dividing head so as to cause the spindle of the dividing head, which holds and rotates the gear blank, to rotate in relationship to longitudinal movement of the table.

40. A hob has almost continuous cutting action, there are multiple teeth, and the action does not have to be stopped to index the gear blank.

41. The tooth profiles are produced by successive cuts of the cutter past a slowly rotating workpiece.

42. Cold-roll forming is a very rapid process, the faces of the resulting teeth are very smooth and somewhat hardened, and the gear may be stronger.

43. Cold-roll forming requires a ductile material; gray cast iron is not ductile.

44. Shaving cannot be used on hardened gears.

45. Cold-roll forming produces work hardening and thus provides a better wearing surface on the face of the teeth.

46. Cast iron is soft, and the lapping abrasive would become embedded in the gears, resulting in them not being lapped but rather the teeth would become laps.

47. Gear inspection checks: hardness; tooth thickness, spacing and depth; tooth profile; surface roughness; and noise.

48.Gear finishing is accomplished by gear shaving, roll finishing, grinding (good for hardened gears) and lapping for final finishing.

Problems:

1. For 30 fpm, the RPM will be N = (12 x 30)1(3.14 x 0.75) = 152.8rpm.
The cutting time CT = (2 + 0.75)/(0.1 x 152.8) =0.179 min.
where 10 thread per inch = 0.1 inches/thread or 0.1 inches per revolution and 0.75 inches is the allowance for overtravel to insure that full threads are cut.

2. The recommendation is based on the favorable cutting time of the chipless tap over the normal tapping process. The engine blocks may be made out of cast iron, in which case fluteless tapping will not work because cast iron is a brittle material. In addition, tapping deep, dead-end holes with fluteless taps is a difficult process. If these are aluminum engine blocks, then the suggestion should be given serious consideration. P.S. Do not forget to ask the operator and the foreman in the area what they would recommend, as they are going to have to implement any suggestions you make.

3. RPM of hob = (27.4 x 1000) / (76.2 x 3.14) = 114.5
RPM of gear blank = 114.5 / 36 = 3.18

4. Effective width = 76.2 + (2 x 38) = 153.2 mm
Time = 153.21(3.18 x 1.9) = 25.4 minutes

5. For the HSS cutter milling 4340 steel, selected values for
V = 100 fpm and f_t = 0.007inches per tooth would be reasonable.

f_m= n N Ft, where N = 12 V / (πD) = 12 x 1001(3.14 x 4) = 95.4
f_m= 11 x 95.4 x 0.007 = 7.35 ipm

CT = (L + A) / fm = (1 + 2~4) / fm for a 1 inch thick gear
CT = 3.4 / 7.35 = 0.46 min.
where A = allowance = $2L_A = 2 \{ t (D-t) \}^{1/2} = 2 \{ 0.6(3.0 - 0.6) \}^{1/2}$ for t=0.6, scaled from Figure 31-19

Each pass takes about 1/2 minute. From Figure 31-19 one can determine that there are 12 teeth which require 12 passes. Assuming that it takes 30 seconds to return the cutter to the start position and index the gear blank 30 degrees, the job would take about 12 minutes. Down milling will be used to get the best finish on the teeth.

6. The broach has 10 sets of progressive tooling, so assume the cost of the tooling is $2500. Assume labor costs $10 per hour and machine overhead is 100%. Assume the milling cutter cost is $100 or so. The milling time is 12 minutes per part versus 15 seconds per part for broaching.

Savings estimate (12-.25) x (20 / 60) = $3.91/part

Assuming all other costs remain the same,
Additional cost = $2500 - 100 = $2400 for the broach versus the milling cutter

BEQ = 2400 / 3.91 = 613 parts

If the company is making over 613 gears and has both machines, the switch is justified.

Comparing to shaping, assume a 1 minute cycle time for shaping.
Savings estimate (1-.25) x (20 / 60) = $0.25/part
BEQ = 2400/0.25 = 9600 parts

Broaching would only be preferred to shaping if there were over 9600 gears to be machined. The broach can easily cut that number of gears and the cost of TiN coating is also justified. For example, adding $100 to each broach,
BEQ = 3400/3.91 = 869 parts

7., 8. The gear manufacturing processes described in the chapter are listed in the table along with some important characteristics of each related to making 1.125 inch diameter, 70-30 brass gears.

Process			Consider for
Form Milling	standard cutters standard milling machine	slow	3
Broaching	complex machine complex tooling	short cycle time	10,000
Gear Generating			
- shaping	specialized machine can make multiple gears simultaneously	short cycle time	10,000
- hobbing	general purpose machine can be adapted specialize machine for high production		3, 10,000
Cold-Roll Forming	specialized machine high quality tooling	short cycle time high quality gears	10,000
Casting	probably requires finishing		
Blanking	for thin gears		NA
Powder Metallurgy	specialized equipment and materials		don't consider
Flame machining	little accuracy		NA

8. Above

9. The hole is larger than the internal thread minor diameter.

A closer look at machinists' handbooks will show not only 75% threads but also 60% threads that call for larger drill sizes than the 75% thread drill size which is still larger than the minor diameter.

While an oversimplification an explanation of thread strength is that it is determined by the shear of threads and so the width of the thread is the important issue and thread depth is secondary. With regard to thread manufacture there is work material deformation in addition to the metal removal. Too small a prepared hole will lead to very little room for deformed material flow, tap seizing and tap breakage. Machinists working on prototypes and special projects have been know to use drill sizes slightly larger than recommended for low stress applications so as to ease machining problems.

Case Study: "Vented Cap Screws"

The redesigned part would need a hole 0.024 inches in diameter, 1/2 inch deep. This is a hole diameter to hole depth ratio of 1 to 20, clearly not a conventional drilling process.

The hole or the slot, as designed, could be made by EDM or ultrasonic machining, or perhaps laser machining, depending upon the available equipment. If none of this equipment is available, ask the designer if the slot needs to be of uniform cross section throughout, or only in some region to control the pressure buildup. This is probably the case, and would allow the slot to be redesigned as shown in the sketch below. This design can be slot milled using a one-inch-diameter slot milling cutter.

CHAPTER 31

Review Questions

1. Some of the possible objectives of surface modification processes are: clean surfaces and remove surface defects, modify a product's appearance, improve resistance to wear or corrosion, reduce friction or adhesion, and conserve costly materials.

2. When selecting a surface modification process, one should consider the common factors of time, labor, equipment, and material handling. In addition, consideration should be given to such features as: the size of the part, the shape of the part, the quantity to be processed, the temperatures required for processing, the temperatures encountered during subsequent use, and any dimensional changes that might occur due to the treatment.

3. Two general concepts apply. One is the shape or geometry or topography of the machined surface. Machining processes produce surface profiles that are not exact replicas of the tool shape. The deformation of the work surface results in roughness at a more local level than the size of the cutting edge and nose radius. This is the roughness usually measured and referred to as “surface roughness.”

The other aspect of the machined surface is the modification of the structure, properties and residual stress state of the machined surface layer. These changes in material characteristics can affect the part performance in use. The term “surface integrity” refers to this aspect of machined surface characteristics.

4. Manufactured products frequently contain foreign material on the surfaces. Sand from casting molds and cores often adheres to surfaces. Scale can be produced when metals are processed at elevated temperatures. Oxides can form during storage.

5. Blasting or other abrasive cleaning operations utilize abrasives such as: sand, steel grit, metal shot, fine glass shot, walnut shells, dry-ice pellets, and even baking soda.

6. Barrel finishing operations are most effective when large quantities of small parts are to be processed.

7. In barrel finishing, the rotation of the barrel causes the material to rise until gravity causes the uppermost layer to cascade downward in a "landslide" movement. If the barrel is too full, the relative motion between the work and the abrasive will not adequate. Increasing the speed causes the material to rise higher in the barrel, but if the speed is too high, centrifugal forces cause the parts to adhere to the outside of the barrel, thereby eliminating the cascading action.

8. In barrel finishing, most of the finishing occurs when the parts slide down over the media. In vibratory finishing the entire load is in constant agitation, and there is virtually constant relative motion between the work and the media.

9. Synthetic abrasive media, formed by combining abrasive material and a binder, are manufactured, and have consistent and reproducible size and shape.

10. The compounds that are used in abrasive finishing operations can perform a variety of functions, including:
deburring, burnishing, abrasive cutting, cleaning, descaling, and corrosion inhibition.

11. The ideal geometry for belt sanding is a flat surface. The process is more difficult with curved surfaces, and is extremely difficult to apply when the geometry includes recesses or interior corners.

12. Electropolishing is the reverse of electroplating, since material is removed from the surface rather than being deposited.

13. Alkaline cleaning can remove a variety of soils, including oils, grease, wax, fine particles of metal, and dirt. The actual cleaning occurs through one or more of: (1) saponification, (2) displacement, (3) dispersion or emulsification, and (4) dissolution.

14. Solvent cleaning cannot be used to remove insoluble contaminants, such as metal oxides, sand, scale, and the inorganic fluxes used in welding, brazing and soldering.

15. Environmental issues have made vapor degreasing rather unattractive. The standard solvents have been identified as ozone-depleting compounds, and have been banned from use. Replacement solvents usually lack one or more of the qualities that are desirable for the process.

16. Acid pickling operations are generally used to remove oxides and dirt that remain on the surface of metals after other processing operations.

17. During milling of most of the slot the work material ahead of the cutter is supported by more work material ahead of the deformation zone. As the free surfaces of the workpiece are approached this support decreases. Very near the free surfaces the workpiece deformation zone is not strongly bounded. The deforming material is not cleanly sheared and deforming material can move into free space forming burrs.

18. During thermal energy deburring, the parts are loaded into a chamber, which is then filled with a combustible gas mixture. when the gas is ignited, the short-duration wavefront heats the small burrs to extremely high temperatures, while the rest of the part remains cool. The burrs are vaporized, including those in inaccessible or difficult-to-reach locations .

19. While both coating and cladding are deposition processes, coatings are deposited as a liquid or a gas (or from a liquid or gas medium), while the added material is solid during cladding.

20. Paints are used for a variety of reasons, including providing protection and decoration, filling or concealing surface irregularities, changing the surface friction, and modifying the light or heat absorption or radiation characteristics.

21. In a painted surface, the prime coat serves to promote adhesion, fill minor porosity or surface blemishes (leveling), and improve corrosion resistance. The more highly pigmented final coats are designed to provide color and appearance.

22. In airless spraying, mechanical pressure forces the paint through an orifice under pressure. The resultant velocity is sufficient to produce atomization and propel the particles toward the workpiece.

23. Industrial robots can mimic the movements of a human painter, while maintaining a uniform separation distance and minimizing waste. Monotonous and repetitious movements can be performed with consistent results, and the human operator is freed from an undesirable working environment.

24. Electrostatic spraying greatly reduces paint loss and the generation of airborne particles, and provides for more uniform coverage of the workpiece.

25. In electrostatic spray painting, the workpiece must act as one of the electrodes. Wood and plastic are not electrically conductive and cannot serve as an electrode.

26. The most common metallic coatings that are applied by hot dipping are: zinc, tin, aluminum, and terne (a lead-tin alloy).

27. The two most common types of chemical conversion coatings are chromate and phosphate.

28. Nonconductive materials, such as plastic, can be electroplated provided that they are first coated with an electrically-conductive material. Processes, such as the electroless deposition of nickel can be used.

29. Hard chrome plate offers Rockwell C hardnesses between 66 and 70, and can be used to build up worn parts, and coat tools and other products that can benefit from the reduced surface friction and good resistance to wear and corrosion.

30. Some of the process variables in an electroplating cell include: the electrolyte and the concentrations of the various dissolved components, the temperature of the bath, and the electrical voltage and current.

31. Ordinarily only one type of workpiece is plated at a time, since the details of solutions, immersion times, and current densities are usually changed with changes in workpiece size and shape.

32. In the electroforming process, the coating is stripped from the substrate and becomes

the final product. In electroplating, the coating and substrate remain intact.

33. when anodizing aluminum, if the oxide is not soluble in the anodizing solution, the oxide will grow until the resistance of the oxide prevents the current from flowing. If the oxide is partially soluble, dissolution competes with oxide growth and a porous coating is produced. As the coating thickens, the growth rate decreases until it achieves a steady state where the growth rate is equal to the rate of dissolution.

34. In color anodizing, a porous oxide is first produced, which is then immersed in a dye solution. The dye is then trapped in place by a sealing operation.

35. Electroless plating will provide uniform thickness on complex shapes and it requires much less energy. In addition, metallic platings can be directly applied to nonconducting surfaces.

36. When minute particles are codeposited with the electroless metal, electroless plating can be used to produce composite coatings. Commercial applications have used diamond, silicon carbide, aluminum oxide, and teflon particles dispersed in the metal matrix.

37. Mechanical plating is an adaptation of barrel finishing in which coatings are produced by cold-welding soft, malleable metal powder onto a substrate.

38. Porcelain enamel coatings can be used to impart resistance to corrosion and abrasion, decorative color, electrical insulation, and the ability to function in a high-temperature environment.

39. See the Case Study below.

40. Since machining processes are surface region removal processes there is a difference in the deformation or structure between the worked surface region and the underlying un-worked material so there is always residual stress of some level. In the chip formation type of machining such as turning and grinding deformation gradients can be high and residual stresses are high. In very mild machining operations such as electrochemical machining there are still differences between worked surfaces and the bulk of the material, although such differences can be very small.

41. The extent of deformation below machined surfaces depends on the magnitude of the forces acting and the direction of the forces. A way to understand the effect of tool rake angle on depth of subsurface effects is to consider the resultant force of the cutting forces, R, in Figure 21-20. The magnitude of r is

$$R = \{ F_c^2 + F_t^2 \}^{1/2}, \quad \text{eqn (21-25)}$$

and the direction of R with respect to the finished surface is

$$\eta = \beta - \alpha$$

For constant coefficient of friction, as rake angle α becomes more negative the direction of R rotates so that R is directed more into the work material.

As rake angle decreases the cutting forces increases. A qualitative explanation is,
- as α decreases the shear angle ϕ decreases, eqn(21-19)
- decreasing ϕ means that the shear plane length and area increase, Figure 21-17,
- the shear strain also increases as ϕ decreases, eqn(21-31)
- as the amount of deformation increases the cutting forces increases if the work shear strength is constant, increases or does not decrease enough to compensate for the increase in cutting forces due to increased deformation

42. Fatigue failure involves crack initiation and growth. Crack are more likely to initiate at surfaces than in interior region of manufactured parts because,
- the manufacture of surfaces results in surfaces that are not perfectly smooth and small sharp irregularities in surfaces act as stress raisers,
- in extreme cases the irregularities in the surface may be small cracks,
- manufacturing operations may produce tensile residual stress in the surface region that then can act in consort with applied tensile stress to raise the net stress acting,
- the change in stress state from the interior of the material to the plane stress state at the surface can result in stresses that aid crack initiation.

43. Stress raisers are changes in material shape, part geometry, that result in the local stress near the change in shape being increased. At changes in geometry the material remains continuous so the stress changes and increased local stress can result.

44. The two types of surface effects due to machining are surface profile effects and subsurface region effects – see Question 3.

45. The residual stress combines with the stress due to applied loading to give the net stress acting, locally, in the part. If tensile stresses result and are undesirable in use then the residual compressive stress acts to reduce the net tensile stress acting and can improve part performance.

Problems:

1. Because of the wide variety of finishes desired, a number of processes can be considered. Of particular importance is the need to retain the necessary mechanical properties that were set by the heat treatment. Exposure to high elevated temperatures will overtemper the hook, making it prone to possible unwanted deformation. In addition, the need to maintain sharpness of the points and barbs significantly restricts the thickness of any applied coatings. The shape and the presence of the barbs may well make any mass treatment process rather difficult.

The ideal process would produce a durable, thin, uniform-color coating under low temperature conditions. Among the attractive possibilities are chemical conversion treatments, the various PVD methods, and blackening or coloring treatments.

2. This is a rather open-ended problem offering a wide variety of base materials, sizes,

shapes and requirements. It is designed to expose the student to the wide variety of surface treatment methods that are encountered in everyday products.

The extent to which the problem is treated can vary greatly. For example, part k) - the automobile muffler offers the option of having to integrate surface treatment and manufacturing process. For example, spot or seam welds are quite difficult if the sheet material has an existing galvanized (zinc) coating. Low-carbon sheet steel, however, can be readily seam welded. Therefore, if the sheet material is pre-galvanized, then assembly might utilize some form of mechanical (such as roll-lock) seam. If uncoated material is selected with the intent of subsequent coating, the student should realize that the presence of inlet and outlet tubes, and internal components or baffles, would preclude the possibility of approaches such as hot-dip galvanizing after assembly.

Case Study: "Burrs on Tonto's Collar"

1). Here is a listing of deburring techniques commonly used in industry (as contributed by L.K. Gillespie and J.G. Bralla):

- Barrel tumbling. A large group of parts with burrs are placed in a rotating barrel with small pebble-like media, a fine abrasive powder, and water, and the barrel and its contents are slowly rotated until the burrs wear off, typically 4-12 hr.
- Centrifugal barrel tumbling, similar to barrel tumbling except that the barrel is placed at the end of a rotating arm. The addition of centrifugal force up to 25G to the weight of the parts in the barrel makes the process 25-50 times faster than conventional barrel tumbling.
- Spindle finishing, also similar to barrel tumbling except that the workpiece is fastened to the end of a rotating shaft and then placed in a barrel rotating in the opposite direction. The abrasive media gently wears off the burrs and produces a smooth radius on the edges. Although each part must be handled individually, deburring requires only 1-2 mm. per part.
- Vibratory deburring, also similar to barrel tumbling except that parts and media are vibrated rather than rotated.
- Abrasive-jet deburring. A high-velocity stream of small abrasive particles or miniature glass beads is sprayed at the burrs, and a combination of impact, abrasion, and peening actions breaks or wears away the burrs. Deburring takes from 30 sec to 5 mm, depending on workpiece size and complexity. This process is essentially a refined sand-blasting process.
- Water-jet deburring. A 0.25-mm-dia (0.010-in.-dia) jet of water at very high velocity cuts burrs and flash from the workpiece. In nonmetals, this process can deflash contours at a rate of 250 mm/s (600 ipm).
- Brush deburring. Motorized rotating brushes abrade burrs from parts at a rate from 10 sec to 5 mm per part. At least 50 different types of brushes are in common use.
- Sanding. Belt sanders deburr flat parts and disks, and flap wheels deburr contoured parts, at a rate of 600 stamped parts per hour. Although heavy burrs are

removed, the process itself often produces a very small burr.

- Mechanical deburring. A variety of specialized machines are equipped with chamfering tools, knives, or grinding wheels to mechanically remove cut burrs. Automotive gears, for example, can be deburred at a rate of 400 gears per hour.
- Abrasive-flow deburring. Hydraulic cylinders force an abrasive-laden putty-like material over burrs at a rate of 30 parts per hour. Deburring at up to 400 parts per hour is possible with automation. Some dimensional changes occur on surfaces contacting the putty-like material.
- Liquid-hone deburring. A 60-grit abrasive suspended in water is forced over burr-laden edges, removing very fine burrs in a 5-mm cycle and producing minimal edge radii.
- Chemical deburring. Buffered acids dissolve burrs from large groups of small parts in 5-30 mm, depending on the part. Because acids attack all surfaces, some dimensional changes of the entire part occur.
- Ultrasonic deburring. A combination of buffered acids and a fine abrasive media is ultrasonically agitated to wear and etch minute burrs, such as those produced in honing.
- Electropolish deburring. Reverse electroplating operation uses electrolysis in a mild acid solution to remove burrs from all surfaces, producing excellent surface finish.
- Electrochemical deburring, similar to electropolish deburring except that a salt solution and a shaped electrode are required. Stock is removed only at the edges, although some light etching occurs at other places on the part. Surface residues on the part have to be brushed or wiped off.

  Deburring typically requires 2 min per part, without automation.
- Thermal-energy deburring. A high-temperature wavefront -produced by igniting natural gas in a closed container -vaporizes burrs. The short-duration wavefront exposes components to only 95C (200F) while burrs are exposed to as much as 3300C (6000F). Up to 80 parts per hour can be deburred by this process.
- Manual deburring. Workers with special knives, files, scrapers, and other tools cut burrs from parts.

2). The screw machine operation has six steps:

I. Use form tool to turn the 12.7 mm diameter (The original diameter is 17.46 mm.)
II. Slot the end. (Rotation must be stopped to form the slot.)
III. Turn the 16 mm diameter. (The original diameter is 17.46 mm. This operation removes the slotting burrs.)
IV. Drill 6.4 mm hole. (This operation uses the part of the hole remaining from the previous part as a start.)
V. Thread the 12.7 mm diameter. (Use a thread-forming tool.)
VI. Cut off.

(Cut to the specified 12.7 mm length.)

Drilling and turning after slotting eliminates most of the burrs. This part takes about 20 seconds, so the machine can make 180 per hour. The total run takes about 138 hours or 17-18 days, assuming one 8-hour shift per day. The part would cost about 10 or 11 cents, exclusive of material to make on the screw machine.

3). The collars could also be made by powder metallurgy. It is likely that powder metallurgy would be somewhat cheaper for the quantity required, but much would depend on local conditions as to competition between suppliers.

The collars could also be made by on cold heading machines followed by thread rolling. Quantities may be a bit too small to justify the dies.

The collars could also be investment cast. The cost here would likely be higher than the other alternatives that can take advantage of the geometric symmetries.

The collars cannot be die cast because the melting temperature of the material (AISI 304 stainless steel) is too high.

CHAPTER 32

Review Questions

1. Table 32-1 shows human attributes replaced
A(0) - none
A(1) – energy – power other than human powers machine
A(2) – dexterity – machines manipulate material
A(3) – diligence – machine runs without attention, but not closed-loop
A(4) – judgement – closed-loop control in response to measurements

2.A(1) powered machines – power hand tools
A(2) machine runs itself over single cycle – cooking ovens, clothes and dish washing machines
A(3) automatic repeat of cycles – clocks repeat mechanical and electronic actions cyclically
A(4) closed-loop control – refrigerators, freezers, home furnaces acting on thermometer measurements

3. Windmills are A(4) self-adjusting machines since the direction is set into the wind in response to changing wind direction. Changes in wind direction act to produce changes in force on the windmill rudder and motion of the mill to a desired, defined direction.

4. Feedback control includes an active action in response to a change in system operation. So, the overflow plumbing in sinks is not a typical feedback control system since no active control action is taken to stop water flow – water flow is simply diverted not controlled. Modern temperature and pressure controlling shower valves do operate based on measured flow rate to control flow. The water level in toilets is measured with simple mechanical mechanisms and water flow is allowed to continue or stopped based on feedback information.

5. Line balancing refers to time balancing - making the time for each station in a transfer line as close to the same as possible. This requires the balancing of the specific operations that are done at each station so the machining time at each station is the same.

The operations shown in Figure 32-6 are five machining operations. If each operation requires the same amount of time, then all operations finish at the same time and indexing occurs. The next set of operations are carried out in the same time and indexing to the next operation occurs, etc. If individual operation times are not equal then the system must wait for the longest operation to be completed before indexing and the start of the next step.

6. The machining center can automatically change tools to permit operations and processes other than just milling to take place. Both machines can be numerically controlled. The machining center will often be able to change pallets automatically with one pallet being in the machine and the other pallet being outside the machine having a workpiece mounted on it. This reduces the machine down time by doing the setup

externally - the machine does not have to be stopped during setup, only during part exchange.

In 1958, Kearney and Trecker marketed a NC machine tool that could automatically change tools, thus making it a multiprocess machine tool and the first machining center.

7. Parsons conceived of the idea of a machine tool controlled by inputting numbers. He demonstrated his idea to the U.S. Air Force by having three men stand at the controls of a 3-axis milling machine with three more people calling out numbers to them simultaneously. The machine then produced a complex contour. The USAF gave Parson's company a grant to develop a NC machine. Parson subcontracted KIT and the rest is history.

8. DNC as first practiced means direct numerical control and described a system wherein numerical control machines where hardwired to a large digital computer. Programs were sent directly to the machine tool and paper tapes were not needed. Recently, DNC stands for distributed NC were programs are distributed to the on-board computers at the CNC machine tools. That is, the CNCs are networked to a large computer which provides enhanced memory and computational capacity.

9. An adaptive control system, A(S), must be able to evaluate the process, and modify the inputs in order to optimize the process in some way. In order to do this, the machine tool must have a computer, and that computer must have in it a mathematical model which describes "how the process works". The process is going to adapt itself to improve or optimize itself, or its cost, or some other feature. To be specific, the house thermostat controls the temperature in the house. To make this system A(S), it would have to adjust fuel and air mixtures to improve the heat yield and burn more efficiently. It may even be programmed to change from oil to gas, depending upon the cost of fuel, in order to optimize cost.

10. Feedforward is sensing something about the product on the input side of the process and altering the process to meet these changing input parameters. For example, in hot rolling, the temperature and size (thickness) of the plate entering the rolling stand influences the strength and needed opening between the rolls to accomplish the desired thickness on the output side.

11. The machine tool builders had to learn how to build more accurate and precise machine tools, removing friction and backlash from the mechanical drives, often through the implementation of ball lead screwdrivers. The machines also had to be made more rigid, so that elastic deflections were less of a problem. A good machinist could compensate for such problems on a regular machine tool.

12. Interpolation refers to the situation wherein paths not on the X-Y axes of movement of the table must be approximated with a series of connected short (X,Y) movements. The shorter the increment (the X or Y distance moved), the better will be the interpolation but the program will be longer.

13. Cutter offset refers to the condition where the path of tool centerline must be offset from the desired surface by half the diameter of the tool. This means that the geometry of the path will be different from that of the desired surface. In terms of Figure 32-A the cutter path when machining the bottom edge must be 0.75 in / 2 = 0.375 in away from the intended edge of the part, the tool path will be along the y = 1 in – 0.375 in = 0.625 in line. On the right edge the cutter must run along the x = 6 in + 0.375 I in = 6.375 in line to produce the desired part edge.

14. The operator performs part loading and unloading, inspection, deburring, part transportation, reorientation (turn part end for end), and process monitoring. Any function which requires thinking on the part of the operator will be difficult to automate. In addition to the above functions, the operator may perform setups, improve setups, control the process capability and maintain the machines. Therefore, he may be very multifunctional. The higher the level of function, the more difficult it will be to automate it.

15.Open-loop control means reliance on the machine to execute the commands precisely with no feedback information, e.g., no information as to actual position or velocity. In essence there must be no errors in the motions performed. This means more accurate, more precise machines and so removal of friction and backlash, stiffer drive components and structure. There is no provision in open-loop systems for adjustments either by the machinist as in use of manual machines or by the machine system as in closed-loop machines.

16. There is no reason why it cannot be open-loop. The problem is, however, in contouring, where one must control the velocities in the X and Y (and Z) simultaneously within a certain tolerance or variation. This is difficult to accomplish without feedback.

17.A shaper is not really a production-type machine and a broach is a straight-line cutting machine wherein the tool geometry dictates the geometry of the surface to be machined.

18. It takes too long to manually generate all the points needed to describe a contoured path, even in two dimensions. Suppose you have a one inch long curved path and the contouring requires a tolerance of 0.001 inches. This means you might have to generate 1000 sets of points to program the tool to travel one inch.

19. The feedback detection or sensor can be placed on the motor, on the ballscrew of the table or on the table itself. See Figure 32-9.

20. The machine tool has a point in space that is its zero point - where X,Y, and Z dimensions are zero. This point is fixed in the machine tool. The zero reference point is selected by the part programmer or machine tool operator as some point on the part from which all the part dimensions are made. See Figures 29-7 and 29-8 for examples.

21. An encoder is a feedback sensor (a device) which generates pulses as it rotates. The source of the pulses is often an interrupted light beam. See Figure 29-S and 29-10.

22. In continuous-path or contouring control, both velocity and position must be controlled at all times in order to keep the tool on the desired path. In three-dimensional contouring, the cutter is required to move in three directions simultaneously. That is, the movement is the resultant of X,Y, and Z components. The curved path is broken up into short straight segments or arcs.

23. Pecking is a software routine that is already programmed into the machine which permits the drill to be periodically raised out of the hole to clear the flutes of the drill or chips. See figure below.

24. Pocket milling is a form of contouring wherein a hole (usually square or rectangular) is milled into a solid block of metal. This is often done to reduce the weight of the finished product. The cutting tool first feeds down to the desired depth and then feeds in a contouring path to produce the pocket. End mills with spiral flutes are commonly used for pocket milling. See the following figure.

25. Recalling that process capability refers to the accuracy and precision of a process, suppose a part is being turned in a CNC machine. The probe can detect the current size of the part. The correct depth of cut necessary to bring the part to size can be calculated by the computer. This depth of cut will account for variations in tool size and tool wear and deflections in the machining system.

26. The preparatory or G functions (also called G words) precedes the dimension words and prepares the control system for the information that is to follow in the block of information. G codes range from GOO to G99.

27. Transfer lines rely on mechanical mechanisms to control and produce workpiece motion from one station to the next. Changing motions or speeds or reconfiguring the line requires changing the inherent characteristics of machines and structures. In flexible manufacturing systems changing system behavior and performance is produced by much simpler re-programming of more sophisticated devices, e.g., changing machine tool programs, rerouting AGV guides, re-programming robot and moving sections of conveyors.

28. Even if the basic structure of a transfer line is fixed - a given configuration of machines and the mechanisms used to transfer work between them – it is desirable to be able to change operating conditions of individual machines. Programmable machines and PLC’s provide a relatively easy means for controlling and changing the behavior of component machines in a transfer line. Not all transfer lines are necessarily the extreme lock-step, fixed time step stereotypes. Adjustments and changes can be made to individual stations and programmable machines and PLC’s are useful.

29. In finite element problem formulations a continuous field is modeled by a set of discrete elements. The behavior of each element is defined, elements combined to describe the entire domain of interest and the overall behavior calculated.

Finite element analysis in based on replacing the continuous description of a field, e.g., strain or temperature, with a local description for each of a number of elements making up the entire domain of interest. The specification of the behavior of the variable of interest in the individual elements and the continuity between elements is given in the "shape function." The use of discrete elements and an algebraic shape function results in a system of algebraic equations describing the field rather than a differential equation as in continuum models. The solution of the usually large system of algebraic equations is simpler than the solution of a complicated differential equation that results for complex geometry, material behavior, loading and boundary conditions.

30. The two types of computer-aided process planning are variant CAPP and generated CAPP. The difference between them is that
- in variant process planning the plan is developed from an existing plan for a similar part while
- in generated, or generative, process planning a new plan is developed based on part geometric characteristics, design rules and logic and process characteristics and capabilities.

31. Computer graphics can be used to verify the NC program. In addition, a sample part machined out of plastic or machinable wax can be used to check actual dimensions, although cutting forces and therefore defections may be different when cutting metals than when cutting plastics.

32. Robots are used in materials processing (mainly welding, painting, and machining like drilling and boring) and materials handling (load/unload castings, forgings, and plastic processing machines and machine tools for metal cutting in cells). Robots, as they become more precise with long term repeatability, are being used in electronic and mechanical assembly. Very shortly, we will be seeing dedicated robots attached to machine tools for the purpose of changing tools as well as loading and unloading functions.

33. The typical industrial robot has a manipulator arm, a hand, a power source, and a control system. Depending upon the level of the robot, it will have feedback devices in the various joints, in the manipulator arm and hand, and perhaps sensors for tactile or visual sensory systems.

34. Spherical, rectangular, cylindrical, and jointed-arm are common work envelopes.

35. Positional feedback can be obtained by resolvers or stepper motors or other feedback devices in the joints of the robot arm. Proximity sensors are being developed as well to give positional feedback to the controller. Robots with visual sensors are being introduced into industry in a limited fashion. Many of these systems use vision systems for finding the position or orientation of workpieces so that the robot knows where to go to fetch the part.

36. The rotary transfer device not only moves the part from machine to machine, but also

serves as the workholder. The robot does not serve as the workholder, only a material handler doing load/transport/unload functions. The rotary transfer machine is setup to run one part in large volume. The unmanned cell is designed to handle a family of parts in very small lots. The machines in the cell are computer NC while the machines in the transfer machine or automatic repeat cycle with no feedback - fixed or hard automation or programmable NC machines.

37. The human worker can think, has superior vision and tactile feel, and in addition can walk. The human can also detect odors and hear funny sounds coming from the machines. Compared to humans, robots are quite handicapped but are superior in their ability to work in hazardous or dangerous or nasty environments and are very repeatable, having less cycle time variability when the cycles are long.

38. Tactile sensing is giving machines the sense of feel. No examples readily come to mind.

39. Most robots in automobile body assembly lines are doing spot welding. Some are doing arc welding, other painting. These operations entail moving through well-defined, relatively simple paths. Production of these kinds of motions with robots is easy, inexpensive and replaces people in repetitious tasks in unpleasant environments.

40. Ultra high-speed machining centers have to produce high spindle speed, high feed rates and high rapid travel moves between cutting passes. This leads to the following requirements and the continued development of
- high speed, high stiffness spindles,
- high speed, high performance (acceleration, deceleration) drives,
- high performance controller (high bandwidth),
- high stiffness machine structures.

Problems:

1. The X and Y locations / dimensions for hole #2 are +6.7118 and +8.6563.
The X and Y dimensions / locations for hole #3 are +7.9445 and +4.0555

2. $2\pi r = 3600 = 2\pi\ 5$ in $= 31.42$ inch
$\cos(\theta/2) = (5 - T) / 5 = (5-0.001) / 5 = 4.999 / 5$
where θ = the span angle

Therefore, $\theta/2 = 1.1459^{o}$ and $\theta = 2.292^{o}$
$AB = (31.42) (2.292) / 360 = 0.2$ inches

3. $\text{Cos}(\theta/2) = (5 - T) / 5 = (5 - 0.0001) / 5 = 0.99998$
$\theta/2 =0.36^{o}$;
$\theta = 0.7247^{o}$
$AB = (31.42) (0.7247) / 360 = 0.060$ in

4.

PT	X	Y
1	0	-0.5
2	12.5	-0.5
3	12.5	12.5
4	-0.5	12.5
5	-0.5	-0.5
6	0	-0.5

5.

PT	X	Y
1	0	-0.5
5	-0.5	-0.5
4	-0.5	12.5
3	12.5	12.5
2	12.5	-0.5
1	0	-0.5

6. From the drawing:

- the center of the bolt hole circle is at X = 12 in, Y = 10 in, the radius of the bolt hole circle is 6 in and the angle between holes is 45^o.

The X and Y directions the distances, d, of the center of hole 6 from the center of the bolt hole circle are

in the X direction, $d_x = - (6 \text{ in}) \sin 45^o = -4.243$ in
in the Y direction, $d_y = - (6 \text{ in}) \cos 45^o = - 4.243$ in

And hole 6 center position with respect to the Zero Reference is

X = 12 in – 4.243 in = 7.757 in
Y = 10 in – 4.243 in = 5.757 in

Interpreting the English Program

```
INDEX/GO TO/ 18, 10, 1, 40
```

go to position x = 18 in, y = 10 in z = 1 in with respect to zero ref. i.e., center position of first hole

then instructions for drill in a hole and to copy the hole every 45^o for seven holes

```
GO DELTA/MINUS 1, 12
GO DELTA/ 1, 12
COPY/ 1 XY ROT, 45, 7
```

7.

	2^7	2^6	2^5	2^4	2^3	2^2	2^1	2^0
	128	64	32	16	8	4	2	1
Given binary number	1	0	1	1	0	1	1	0
	1x128	0x64	1x32	1x16	0x8	1x4	1x2	0x1
	128	0	32	16	0	4	2	0
SUM	182							

8. [NOTE: This case study was developed from real factory data for a real part. Therefore the findings represent the real situation in the job shop where the machines are often employed. In this environment, you assume that each machine has one operator doing the job.]

1. The fixed costs, which do not change with make quantity, are: engineering, tooling and setup. The variable costs are the run cost and the material cost (which was not listed).

2. In order to find the run cost, one has to compute the CT from the equations found in the chapter and then add to that the time needed for part loading/unloading, tool changing and adjusting, inspection, and so forth during each cycle. See references on cost estimating.

3. The nonmachining portions can be estimated from other similar jobs done on these machines, or one can use techniques like MTM. One cannot use time study, since these jobs are not yet setup and running.

4. This time estimate is multiplied by the labor cost per hour, which can include a factor for factory overhead.

5 and 6. These are the plots shown below followed by the worksheets.

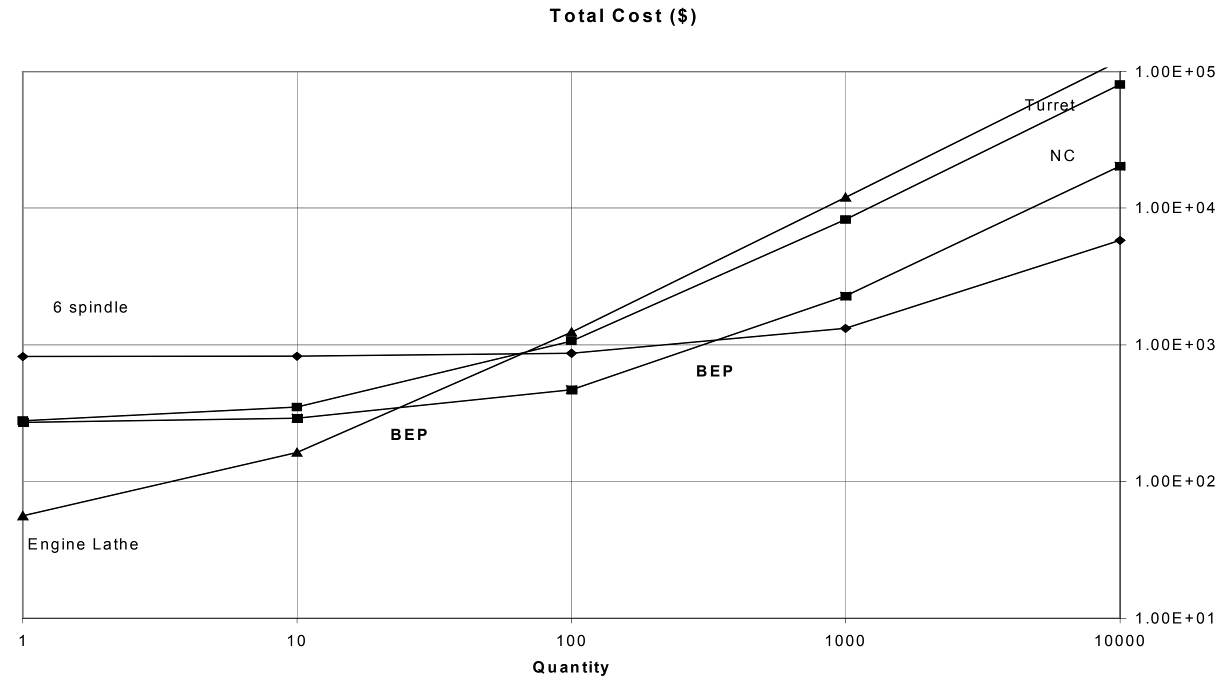
Total Cost ($)
Turret
NC
6 spindle
BEP
BEP
Engine Lathe
1.00E+05
1.00E+04
1.00E+03
1.00E+02
1.00E+01
Total $
1
10
100
1000
10000
Quantity

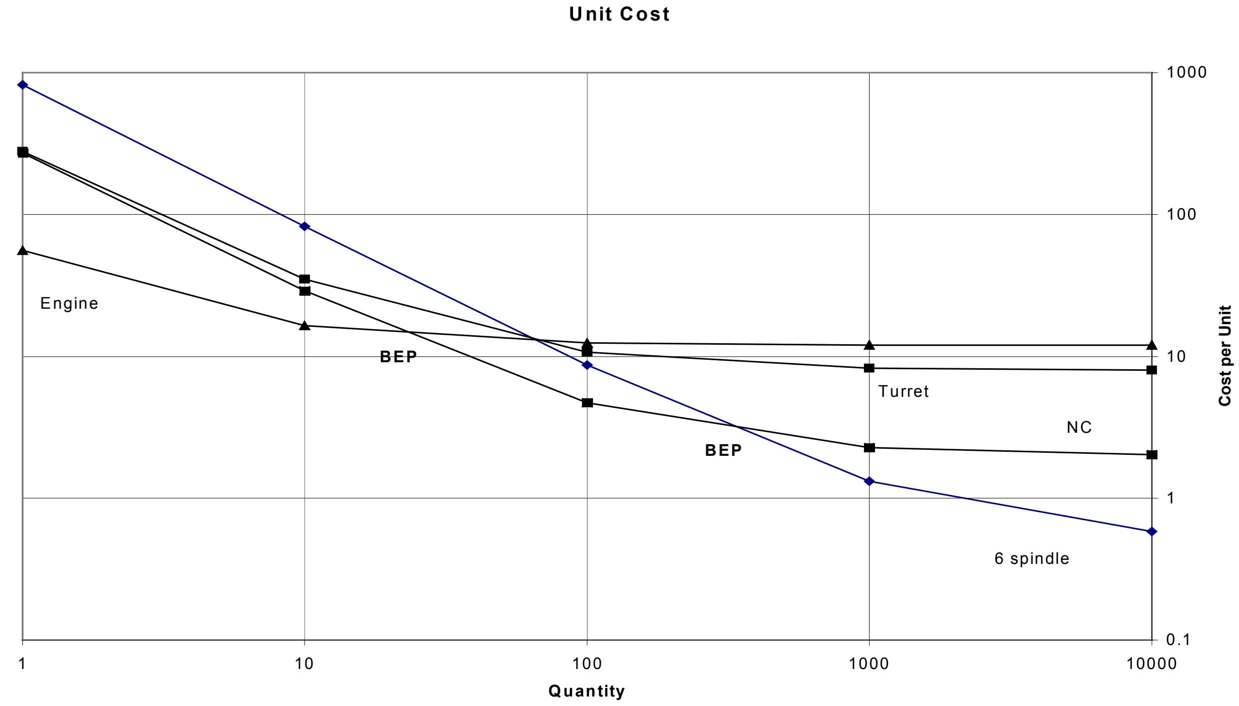
Unit Cost
Engine
BEP
Turret
NC
BEP
6 spindle
1000
100
10
1
0.1
Cost per Unit
1
10
100
1000
10000
Quantity

Prob. 32-8

				10000	1000	100	10	1
6-Spindle	Time (hr)	Rate ($/hr)	Run ($/piece)					
Total Cost				5820	1320	870	825	820.5
Engineering	2.5	40		100	100	100	100	100
Tooling				600	600	600	600	600
Setup Cost	8	15		120	120	120	120	120
Run Cost			0.5	5000	500	50	5	0.5
Cost each				0.582	1.32	8.7	82.5	820.5
Turret Lathe								
Total Cost				80270	8270	1070	350	278
Engineering	2	20		40	40	40	40	40
Tooling				150	150	150	150	150
Setup Cost	4	20		80	80	80	80	80
Run Cost			8	80000	8000	800	80	8
Cost each				8.027	8.27	10.7	35	278
EngineLathe								
Total Cost				120044	12044	1244	164	56
Engineering	1	20		20	20	20	20	20
Tooling				0	0	0	0	0
Setup Cost	2	12		24	24	24	24	24
Run Cost			12	120000	12000	1200	120	12
Cost each				12.0044	12.044	12.44	16.4	56
NC Lathe								
Total Cost				20270	2270	470	290	272
Engineering				150	150	150	150	150
Tooling				100	100	100	100	100
Setup Cost	1	20		20	20	20	20	20
Run Cost			2	20000	2000	200	20	2
Cost each				2.027	2.27	4.7	29	272

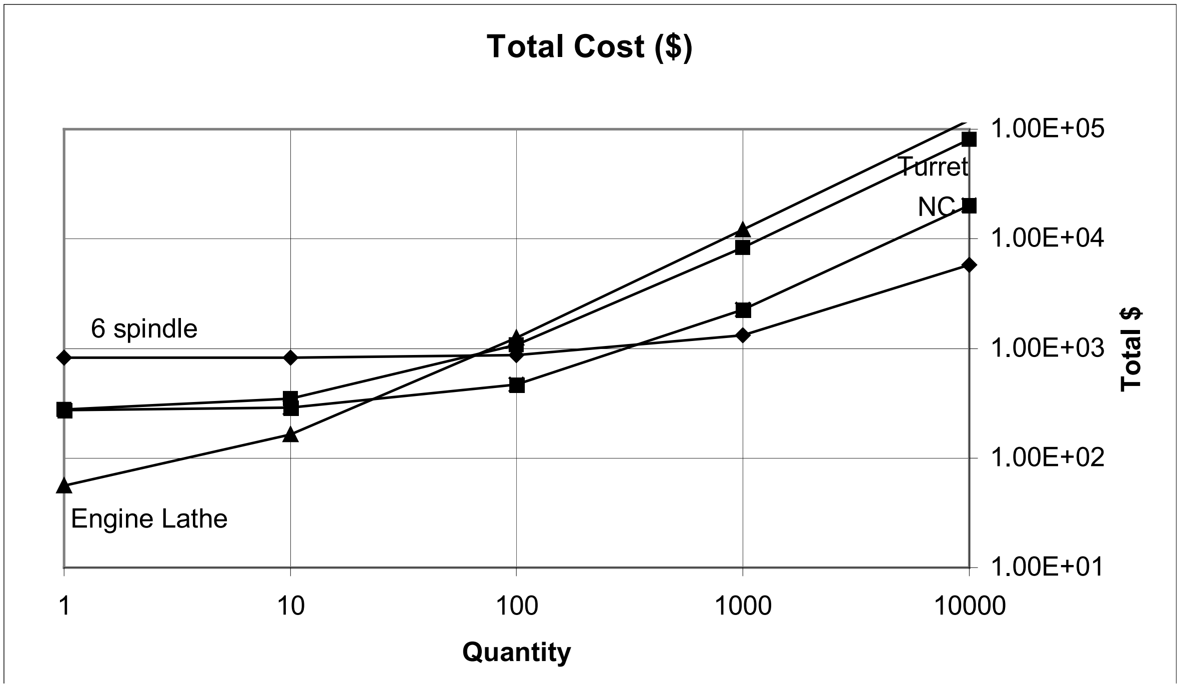

Prob. 32-8

				10000	1000	100	10	1
6-Spindle	Time (hr)	Rate ($/hr)	Run ($/piece)					
Total Cost				5820	1320	870	825	820.5
Engineering	2.5	40		100	100	100	100	100
Tooling				600	600	600	600	600
Setup Cost	8	15		120	120	120	120	120
Run Cost			0.5	5000	500	50	5	0.5
Cost each				0.582	1.32	8.7	82.5	820.5
Turret Lathe								
Total Cost				80270	8270	1070	350	278
Engineering	2	20		40	40	40	40	40
Tooling				150	150	150	150	150
Setup Cost	4	20		80	80	80	80	80
Run Cost			8	80000	8000	800	80	8
Cost each				8.027	8.27	10.7	35	278
EngineLathe								
Total Cost				120044	12044	1244	164	56
Engineering	1	20		20	20	20	20	20
Tooling				0	0	0	0	0
Setup Cost	2	12		24	24	24	24	24
Run Cost			12	120000	12000	1200	120	12
Cost each				12.0044	12.044	12.44	16.4	56
NC Lathe								
Total Cost				20270	2270	470	290	272
Engineering				150	150	150	150	150
Tooling				100	100	100	100	100
Setup Cost	1	20		20	20	20	20	20
Run Cost			2	20000	2000	200	20	2
Cost each				2.027	2.27	4.7	29	272

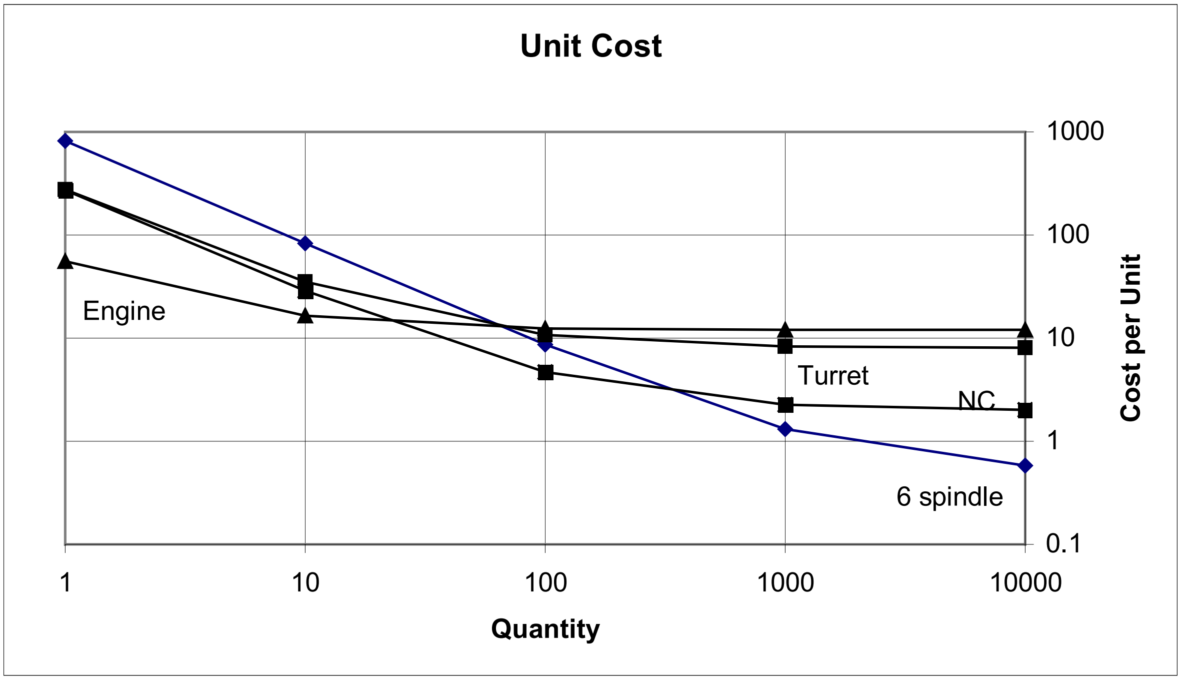

7. The breakeven quantities are shown on the plots. The engine lathe performs best for quantities of about 1 -> 35, the NC lathe for 35 -> 350 and the 6 Spindle Automatic for quantities larger than about 359. The turret lathe is never an economical alternative, being technologically replaced by the NC lathe. We observe that the turret lathe had a very narrow region over which it was economical if one ignored the NC lathe curve. In addition, we observe that none of these processes display an economic minimum, but rather there are regions in which one process is economically preferred. As the build quantities increase and the processes become more automated, the cost per unit continues to decrease, approaching the variable cost per unit as a limit.

8. The turret lathe is never an option. However, if the NC lathe is removed from the solution, the turret lathe has breakeven quantities at about 50 units and 75 units (a very narrow range). Turret lathes are being used far less in production operations due to the greater flexibility, capability, and productivity of numerical control lathes.

9.Use 0.500 in end cutting end mill to cut keyway and to drill (plunge cut) holes
Spindle speed in rpm, feed rate in in/min

N01	GO G17 X1.00 Y3.00	rapid traverse, in x-y plane to x = 1.000, y = 3.000, point 1
N02	G20 Z-0.75 F2.87 S573 M3	move along z axis to location z = -0.750 spindle speed = 573 rpm start spindle (drill hole from initial z to final z gives hole depth, from z=0.25 -> z=-0.75, hole depth 0.5 in)
N03	G20 20.00	move along z axis to retract drill retract position z=20.000
N04	G0 G17 x-0.50 T2.00	rapid traverse in x-y plane to x = -0.500, y=2.000 above work surface location for start of keyway point 2
N05	G20 Z-0.50	move along z axis to z=-0.5 setting keyway depth (z=0.25 -> z=-0.5 keyway depth = 0.25 in)
N06	G17 X5.25 F2.67 S383	move in x-y plane to x=5.25 at feed rate = 2.67 in/min spindle speed = 382 rpm milling of keyway to point 3 at bottom of keyway
N07	G20 20.00	move along z axis to above work surface to z=20.000
N08	G0 G17 x3.00 Y1.00	rapid traverse in x-y plane to x=3, y=1, point 4
N09	G20 Z-0.75 F2.87 S573	move along z axis to z=-0.75 at feed rate = 2.87 in/min, spindle speed = 587 rpm (drill hole from z=0.25 -> z=-0.75)
N10	G20 20.00	move along z axis - retract
N11	M5	stop the spindle
N12	M2	end of program

c. Holes are 0.500 inch deep – see line No2 in table

Case Study: “Steam Line Holes”

1. The holes (cuts or slits) in the outer casing occurred where the edges of the U-shaped supporting legs contacted the casing. Essentially the entire weight of the outer casing rested on the upper vertical leg during transportation. During operation, the weight of the inner line and the steam will rest on the two lower legs.

2. A design error as explained below.

3. The designer of this line was not sufficiently familiar with cold forming operations to realize that when flat bar stock is bent to form the U-shaped support legs, a sharp corner will be produced on each outer corner of the bent pieces due to the stretching-contraction of the bars about the center line. This will create a line contact where the legs contact the outer casing, and the weight of the casing will be great enough to cause the load per unit area to exceed the strength of the casing wall in these regions. This was a design error. (The designer never went out to look at the line being fabricated or he might have caught this condition at the plant.)

4. Two design modifications are suggested. Grind off the sharp corners of the legs and shape the contour of the leg to conform to the interior curvature of the outer casing. This will reduce the unit loads to an acceptable level. The second design modification might be to eliminate the legs altogether and let the steam line simply lie on the bottom of the return line with a layer of appropriate insulation material placed between the two. This eliminates the legs and their fabrication and installation altogether.

5. The line must be totally disassembled and these modifications made even though no damage was visible or detectable. An entire new outer casing should be obtained since it appears that the damage was caused during shipping, not installation. Once operational, however, similar damage to the outer casing will be produced by the bottom legs, unless modifications are made.

CHAPTER 33

Review Questions

1.A prototype is the first physical model of a part or product.

2.The prototype can be used to verify the form, fit and function of part. Adding importance to prototyping is that the prototype is the first physical realization of the part and so is important for product and manufacturing process development.

3. Prototyping is expensive because only a small number of parts are made leading to high cost per part. Also, the total cost is high because usually specialized tooling and equipment are used to produce the prototype, possibly by highly skilled personnel. And, since the prototype is important many aspects of manufacturing personnel from many manufacturing functions will be involved in evaluating the prototype.

4. Rapid prototyping is used in software development and in printer circuit board and microelectronic product and process development.

5. *i*. Desktop Manufacturing: many rapid prototyping machine are about of desktop size, at least in terms of the machine footprint.
ii. 3D Printing: Inkjet printers build essentially 2-d structures using a buildup of ink spots. Some rapid prototyping techniques build 3d structures by the buildup of 3d particles of material analogous to the ink spots.
iii. Freeform Fabrication: Since structures can be built up of particles (for example, 3D printing) or streams of material that hold their shape and quickly solidify, there is no mold needed to contain the material. During part production there is a free surface(s), no container, and the ability to direct the material and so "freeform" fabrication.
iv. Layered Manufacturing: Layers of the final part can be built up by depositing particles or streams, parts can be made from a set of layers, e.g., similar to gaskets with slightly different shape for each layer and a number of layers forming a prototype part.
v. Tool-less Manufacturing: If particles are used to buildup a prototype as in freeform fabrication described in part iii there is no typical or traditional tool in the process.

6.*i*. Preprocessing to convert the part design into a sequence of tool paths.
ii. The fabrication of the part
iii. Postprocessing possibly involving curing, cleaning the part, surface finishing, etc.

7. Freeform fabrication processes are additive in the sense that the part is built up by continually adding material to the forming part until it is complete

8. Concepts modelers produce parts for verification of general concepts such as form, shape appearance and fit into final products. The parts are less durable than parts produced on functional modelers that are more robust and are intended for some level of use such as measurement, testing and perhaps short term use of the part.

9. The four basic groups of freeform processes are
i. Photopolymer-based processes in which material addition is by light curing of selected regions of a polymer bath.
ii. Deposition-based in which material is directly deposited onto the forming part.
iii. Powder-bonding using various kinds of bonding mechanisms to form layers or three-dimensional shapes by selective bonding of powder particles.
iv. Lamination-based processes in which layers of material are bonded together, in contrast to some photopolymer-based process in which the individual layers are form sequentially.

10. In turning, a part is produced by material removal using relatively strong, rigid work and tool materials. In freeform fabrication processes the tool is usually less well-defined and controlled, part production is by the addition of small amounts of material per time and the work material is soft and even fluid in some cases. This results in parts produced in freeform fabrication processes having poorer accuracy, rougher surfaces and larger tolerances than turned parts. In addition production times are longer for freeform fabrication and the work materials that can be used are much more limited.

11. Tessellation refers to a simple shape such as a triangle used to numerically model a surface, and it also can mean the process of using the discrete surface elements to model a continuous surface.

12. Preprocessing involves creating a manufacturing part model from the design model, converting the part shape into a sequence of tool paths and generating machine tool code from the tool path information.

Postprocessing has to do with the part itself rather than preparing input data to fabricate the part. Postprocessing may involve curing, cleaning and surface finishing.

13. The three components of freeform fabrication build time are preprocessing time, fabrication time and postprocessing time. Fabrication time is the longest (50% - 90% of total time) since for most processes material addition rates are low. While not always the case, in many operations small increments of material are added in a sequential manner leading to long build times. In contrast, if all parts of the work are processed at one time, parallel processing, high part production rates can be obtained, e.g., conventional casting solidification and sintering and solid ground curing rapid prototyping.

14. A voxel is a volume element. Voxels are significant in freeform fabrication processes since many of the processes can be modeled using the concept of adding voxels to the emerging part. Part build rate is then related to voxel deposition rate and voxel size. Part surface geometry is determined by voxel shape and size. Voxel size and shape depend on the process parameters - operating conditions.

15. In freeform fabrication material is added sequentially to the emerging part. As layers are built up a stair-step surface is created and this stair-stepping is the dominant surface effect in freeform fabrication. Stair-stepping can be minimized by orienting the part so that adjacent layers match better, meaning that the part orientation might have to be

continually changed during production requiring sophisticated machines and controls. Decreasing added layer thickness will decrease step height, but at the cost of added production time.

16. Random noise shrinkage is the non-deterministic part of the shrinkage that occurs on solidification. Random noise shrinkage is due to random variability in phase change shrinkage.

Random noise shrinkage is a factor in determining prototype dimensions for two reasons. First, shrinkage occurs and so part dimensions change and the change in dimensions depends on the amount of shrinkage. Second, and an important implication, is that since random noise shrinkage is non-deterministic the amount of shrinkage cannot be predicted and so cannot be compensated for by process and prototype part design.

17. Starting with the belief that a known amount of shrinkage can be compensated for and so does not influence final part accuracy, only the random noise shrinkage determines prototype dimensional accuracy. However, equation (33-1) states that the degree of random noise shrinkage is linearly proportional to mean process shrinkage so the material with the largest shrinkage will present the most problems with random noise shrinkage. The material with the largest volumetric shrinkage in Table 33-2 is B F Goodrich / Laserite, LN-4000.

18. In addition to random noise shrinkage, the dimensional accuracy available in freeform fabrication processes depends on shrinkage anisotropy, temperature gradients and the resulting residual stresses and warping, and shrinkage variations over the part due to constraints imposed by part shape (variations in amount of shrinkage in different part sections that have different thicknesses for example).

19. In stereolithography patterning is accomplished by scanning a laser over a phtotocuring polymer so that the polymer solidifies along the laser path. Layering is accomplished by raising the liquid polymer level to above the previously formed solid layer and then patterning the liquid layer to produce the next solid layer.

20. In postprocessing of stereolithography parts the excess, non-polymerized material is cleaned off the part and then the part is post or final cured to assure complete polymerization.

21. Stereolithography layering processes are descending platform, ascending suspension, ascending surface and masked-lamp descending platform.

22. In stereolithography first the boundary the layer is exposed and so cured. This setting of the layer boundary is followed by hatching in which in which the remained of the layer is exposed and solidified.

23. In photopolymerization processes the idealized parallelepiped voxel will not be formed because

- laser beam intensity varies over the beam diameter so there is no sharp laser beam edge to form a sharp edge on the voxel,
- the absorption of laser energy in the polymerizing material decreases with depth into the polymer voxel and so the solidification process varies with depth.

24. If power is decreased less energy is available for curing and so the line of voxels will be thinner and less deep. If scanning speed is increased the energy input per time to any voxel is less and so the voxel (line) will be less wide and less high.

25. The advantages of stereolithograhphy processes include high, repeatable dimensional accuracy (0.03% over 60 mm) and good surface finish (below 16 μm). Disadvantages include the need for expensive, sometimes toxic or irritating, polymers, the need for supports which leads to more complicated part designs, more involved preprocessing and the need to remove supports from the finished part and the need for post or final curing of the part.

26. In solid ground curing the pattern of a photopolymer layer is produced by exposing the polymer through a photomask. The photomasks are used for individual layers then cleaned and re-made with a different pattern to be used in making another layer. Layering is composed of a number of steps. For each layer, unexposed resin is removed, liquid wax is applied to fills voids in the layer and then the layer is milled to final thickness. Another layer is then built onto the structure.

27. In photopolymerization certain parts of the entire polymer bath are polymerized and layers are formed. This leads to three general types of postprocessing operations; cleaning to remove excess polymer, surface finishing to remove unacceptable stair-stepping and final curing to improve part strength through complete polymerization.

28. Lamp photopolymerization can produce dimensionally accurate prototypes and relatively smooth surfaces if layer thickness is small. Complex parts can be produced with supports, e.g. pre-assembled structures.

The disadvantages include small material addition rates and so long build times, the need for specialized materials and usually postprocessing to produce acceptable surface quality. If large parts are required the machine can be very large and this is a move away from the ideal of having to invest little time and expense in making prototypes.

29. Solid ground curing does not require supports for the part being built up. This means more of the working area is available for producing parts.

30. In fused deposition model creation an extrusion head is robotically guided and the extruded material forms a layer pattern. Another layer is extruded onto the previous layer to build up the part.

31. Extruded deposition prototypes do not have smooth surfaces but are usually not postprocessed. Deposition conditions are usually set so that an acceptable, even if relatively rough, surface is produced.

32. Extruded deposition processes use much conventional technology (robots and thermoplastics) and so machines are inexpensive, do not require any special shielding and venting and operator skill is minimal.

Materials used have to be easy to extrude and so the limited number of useful materials is a disadvantage. The material used is in filament form and so more costly than might be expected when quoting typical thermoplastic resin cost. The process is slow and rough surfaces are produced.

33. In inkjet deposition the layer pattern is formed by scanning an inkjet printing head over a surface or support. The small droplets coalesce to form a layer. Layers are produced by additional scans over the emerging part and supporting structure.

34. Depending on prototype requirements, inkjet deposition can produce parts that require no postprocessing. If high surface quality, high accuracy, relatively strong parts are required each layer is treated to fill voids and/or milled before the next layer is laid down.

35. The major advantages of the inkjet deposition process arise due to the small drop size and droplet spacing available. High dimensional accuracy and the ability to produce small structures are results.

With the small droplet size the disadvantage of very long build time is typical of inkjet deposition. Materials that can be used are limited.

36. In selective laser sintering the pattern of each layer is produced by scanning a laser over a powder layer. Layering is accomplished by adding another layer of powder to the layer previous sintered, leveling the powder layer and scanning the laser over this next layer.

37. Scanned laser fusion and sintering produces parts with surface roughness typical of bonding powder particles together. Postprocessing involves cleaning the part and, depending on intended use, perhaps surface finishing by processes such as sanding.

38. Scanned laser fusion and sintering is complicated but high strength materials can be processed and so high strength, directly useable products can be produced, e.g., injection molding molds and die casting dies.

The sintering of powder particles leads to rough surfaces and voids and these can be major disadvantages. Since relatively high temperatures compared to other prototyping processes are needed for sintering, high power lasers and perhaps preheating of the powder are needed and these are disadvantages. The need to heat the powder to sintering temperature leads to slow scan rates and long build times. High temperature is also conducive to oxidation and material contamination and so neutral atmosphere may be required. Shrinkage can lead to poor dimensional accuracy. As in other layering processes, stair-stepping can be a problem depending on the surface smoothness required. Often a final densification heat treatment is needed.

39. Fusing of powder particles involves melting of at least part of the powder and re-solidification. Sintering is carried out below the material melting temperature. Particles bond due to atomic diffusion and viscous flow under pressure.

40. In scanned laser fusion and sintering of amorphous thermoplastics the particle surfaces soften and bond forming a solid structure possessing substantial porosity. In crystalline polymers (parts of the polymer having a well ordered or crystalline structure) melting and bonding of particles occurs. In scanned laser fusion and sintering of metal and ceramics the powder is coated with a binder material which acts to bond particles together when first exposed to the patterning laser. The green structure produced is further processed in final sintering and densification, to form the final strong, dense part.

41. In selective inkjet binding (three-dimensional printing) the pattern of the layer to be produced is formed by injection of a binder between powder particles by a scanning head moving over the powder surface. The injected binder bonds powder particles together and the bonded powder pattern and any unbonded powder serves as the surface for the next scan that produces the next layer of the emerging part.

42. Postprocessing operations are different for selective inkjet binding depending on the material used. Ceramics and metals can be sintered to achieve full strength. Further processing can include infiltration of relatively lower melting temperature metals in to the sintered part to increase density.

43. The initial, green part produced in selective inkjet binding is made from a powder and a binder and is formed at low temperature. This leads to the advantages of being able to process a variety of materials using a variety of binders. The result is the possibility of making high strength parts and using the binder as a component that stays in the part.

The disadvantages of selective inkjet binding are associated with the number of operations needed to produce the desirable part properties. The green part has to be produced and then heat treated and infiltrated to achieve high strength and high density.

44. The individual laminations are cut (usually by laser) in desired patterns from a solid sheet. Layering is by stacking and bonding the individual laminations, usually sequentially immediately after the laminations are produced.

45. Post processing of prototypes from lamination based freeform fabrication processes includes edge finishing and perhaps sealing of hygroscopic materials

46. Lamination-based processes offer the advantages of using easy to cut material (although this limits material selection), no need for complicated support structures and relatively simple machines. The laminates are not severely deformed as they are produced and so warping and residual stress in not a large problem in the assembled parts. Since large laminations can be produced easily, large parts can be produced.

The laminations are produced by material removal – cutting – and so as in all material removal processes material that cannot be used, and must be disposed of, is produced.

Only small batches of parts can be produced so build time is long. Build time is also increased if only thin laminations can be produced and used to build up the entire part.

47. Rapid tooling is immediately usable tooling that can be produced quickly and inexpensively. Tooling is often complex in shape. Since freeform fabrication processes can produce complex shapes in a large variety of materials they form a set of attractive processes for tooling production. This is especially true for tooling that does not have to be extremely hard and strong.

48. Rapid tooling can extend from soft tooling to prototype tooling to production tooling. Soft tooling is used for producing small quantities of parts from easy to work materials, for example molds for casting reacting or low temperature curing polymers. Prototype tooling is destined for the production of small numbers of parts. The parts may be prototypes of real products and so made from more difficult to work materials. Production tooling is used to produce high volumes of high quality parts and so the more complicated freeform fabrication processes such as those involving sintering will probably be used for making production tooling.

49. Engineering tooling assemblies, ETA, are assemblies in which the shaped surface of the tooling is not built into a large block. In contrast to forging dies for example in which the die cavity is sculpted from a die block, in a tooling assembly the contoured surface is formed as a thin shell and is supported by a backing material in a frame to produce the entire tooling assembly. ETA's are significant for several reasons. The contoured shell can be made using freeform fabrication processes that are inexpensive and fast. The backing material and frame are not expected to be expensive compared to standard tooling materials. It may be possible to construct a set of modular tooling with only the shaped part of the ETA produced for different parts.

50.Freeform fabrication can be used for making conceptual prototypes to demonstrate ideas, for functional prototypes that can be used for dimensional and performance evaluation and for the production of real products, e.g., hard tooling such as injection molding molds.

Problems: no problems

Case Study: Flywheel for a High-Speed Computer Printer

NOTE: This part is somewhat unique in the relative absence of mechanical requirements (strength, ductility, fracture resistance, etc.) and the need to concentrate high mass in a small part (i.e. the desire to use a heavy material).

1. While a prototype does not have to serve all the functions required of the production part, the important aspects of function should be reproduced in the prototype. The weight of the part is a major requirement and so is should be included in the prototype. This

removes polymers from consideration and focuses attention on the metallic powder-based rapid prototyping techniques. Selective laser sintering with its ability to use metals and to infiltrate parts to achieve high density is the choice.

2. The above requirements, coupled with the need for high dimensional precision tend to restrict the possibilities. Since all axial surfaces are parallel, and the presence of gear teeth and a non-circular section add complexity in this plane, powder metallurgy seems extremely attractive. The thickness of the part is rather high for powder metallurgy, but the mechanical properties are sufficiently low that the absence of high-density pressing should not be a major limitation. The processing of ferrous materials has become routine for powder metallurgy, and heavier copper-based alloys could be used if even greater mass is desired within a given shape. Machining from bar stock would be another alternative, especially in view of the specified precision. Casting processes could be considered, but those that are compatible with ferrous materials would likely require secondary processing to attain the desired dimensional precision.

Since the mechanical properties are largely unspecified, powder metallurgy part and process design is free to select a material based on minimization of expense and ease of fabrication. An unalloyed iron powder, possibly an iron-carbon to utilize the benefits of the graphite as a lubricant, would seem attractive. Another alternative might be the iron-copper powders, since copper additions enhance P/M fabrication and the copper will actually add additional mass, possibly off-setting the presence of voids within the P/M product. Fabrication by machining would probably utilize some form of free-machining steel bar. Casting processes would best utilize one of the more fracture-resistant cast irons, since the part is a spinning flywheel, and the brittleness of the cheapest gray cast iron may be a detriment.

The "best" alternative here appears to be powder metallurgy because of the suitability of the size and shape, the low or absent mechanical properties, the desirability of ferrous material, and the minimization of scrap and labor (compared to machining). Fabrication would be by the conventional press-and-sinter method.

Consideration might be given to the need for enhanced corrosion or wear resistance. The part contains numerous small gear-type teeth -- might they experience wear? If ferrous material is used, is corrosion a possibility? If either of these become a concern, surface modification, such as the popular steam treatment of ferrous powder metallurgy products might be considered. Such a treatment would enhance surface properties without significantly altering the surface dimensions or finish.

CHAPTER 34

Review Questions

1. Electronics is primarily concerned with producing desired functions through production and manipulation of electrical signals by controlling the flow of electrons.

2.Integrated circuits have all the electrical components and interconnections on a single piece of material. This provides the advantages of a single structure and low cost per functional element since the cost of producing larger integrated circuits does not rise rapidly with the number of elements produced.

Electronic assemblies are combinations of electrical devices, including integrated circuits. Electronic assemblies can have greater flexibility in that elements can be combined to produce more and different functions or applications.

The less complex and less flexible (although still able to perform a variety of tasks) integrated circuits are less expensive that the more expensive, but more flexible assemblies.

3. The three levels of electronic manufacturing are;
i. integrated circuit manufacturing,
ii. integrated chip packaging for connection that leads to,
iii. printed circuit board fabrication and assembly.

4. A semiconductor is a material that can be either an electrical conductor or insulator depending on the impurity atoms in the overall atomic structure.

5. Three common semiconductor materials are silicon, gallium arsenide and germanium.

6. Doping is the introduction of impurity atoms into a semiconductor material to produced desired electrical behavior.

7. In n-type semiconductors electrical conduction is by the movement of electrons, negative charge carriers. In p-type semiconductors electrical conduction results from the movement of positive charge carriers – the movement of holes representing a lack of electrons in the valence level of the atoms.

8. The lack of a full complement of electrons in the valence level of the atoms in a semiconductor represents a positive or p-type charge carrier called a hole.

9. Silicon is the most important semiconductor used today because;
i. it is plentiful
ii. it is readily produced in single crystal form needed for electronic manufacture,
iii. the native oxide that forms is useful in electronic device manufacture.

10. A p-n junction is the interface region between a p-type semiconductor region and a n-type region. A p-n junction can be used as an electrical circuit element by controlling charge carrier flow across it – Question 11.

11. In a semiconductor p-n junction the electrons and holes that are characteristic on the n-type and p-type materials on either side of the junction combine to form region with no mobile charge carriers – the depletion region. The difference in potential across the junction is the potential barrier. Electron flow across the junction can be controlled by the imposition of an external potential and switching flow on and off can be the basis for an electronic device. The manufacture of such devices is outlined in Question 12

12. The steps in producing a bipolar diode are (Figure 34-2)
- production of a silicon wafer by cutting, lapping and polishing a section of a large crystal,
- growing an oxide layer on the wafer in an oven (this oxide layer will be used as a mask in the doping process),
- producing a lithography mask over the oxide layer,
- etching of the oxide layer,
- removal of the lithography mask,
- doping, (another doped layer(s)r will be produced above the first one),
- removal of the oxide mask,
- growing of another oxide layer,
- Patterning of the next layer,
- doping,
- deposition of a conducting metal layer to connect the semiconductor layers produced,
- create masks for lithography of metal film to produce leads and contacts,
- etching of metal layer to produce pattern,
- apply passive, protective coating.

13. ULSI is ultra-high-scale integration of electrical elements to form a device. ULSI and very-large-scale integration, VLSI, differ in the number of components per circuit.

14. Level of integration of electronic components required increased miniaturization of integrated circuit components. Initially new technologies were required, recently better control over processes has led to advances.

15. A silicon boule is a single crystal silicon ingot.

16. Impurity additions while growing a single crystal can serve as initial sites for the congregation and segregation of any additional impurities that may enter the process, see Question 20.

17. The electrical properties of the single crystal depend on crystal orientation and type of dopant used. The single crystal ingot is ground to cylindrical form for use. To provide an indication of crystal orientation and dopant type a flats are ground on the cylindrical

surface. The primary, largest, flat indicates crystal orientation. After processing the grinding affected region is removed chemically – a low stress process.

18. Smaller single crystal ingots have flats ground on them to indicate crystal orientation and type of doping. Grinding easily identifiable easily produced flats on large diameter ingots reduces the surface area available on this high cost stock and so to increase available area for devices notches are used.

19. Since high-precision planar devices are to be produced on the wafer, the wafer surface has to be flat and smooth. Geometric concerns in wafer production are the roughness of the wafer surface and the flatness of the wafer.

20. In wafer production gettering is the intentional addition of hard to move impurities into the wafer material in areas away from regions to be used for component production. The intent is to trap other impurities and defects at the gettering sites, Question 16.

21. Silicon wafers can be doped by;
i. alloying during production of the bulk material.
However to produce desirable, useful structure, composition gradients and behavior for electronic devices selective doping is required. Selective doping can be done by;
i. thermal diffusion,
ii. ion implantation.

22. For doping of semiconductor material ion implantation offers better control of the depth of dopant penetration and so dopant concentration and concentration gradient than thermal diffusion. Also, ion implantation provides better control over the impurities that may work their way into the diffusion process.

23. Ion implantation takes place as the high kinetic energy diffusing species impact with and enters the semiconductor. Mechanical damage results and this affects electrical and chemical properties. To remove or minimize the damage annealing processes are used.

24. In annealing, and other thermally driven processes, the effects produced depend on temperature and time of the workpiece at elevated temperature. In annealing of doped semiconductors the high temperature drives the decrease in mechanical damage but also increases energy available for movement and redistribution of dopant atoms. Rapid thermal processing technologies are advantageous since their use results in less change in the electrical properties of the material being processed.

25. In microelectronics manufacturing silicon dioxide is used as;
i. a dielectric material component of electronic elements, e.g., the gate in field effect transistors,
ii. an insulating material between electron element components such as isolation layers between metal conductors.

26. In wet oxidation the furnace atmosphere contains oxygen and water vapor. The diffusion rate of water molecules into the forming diffusion mask is greater that for oxygen molecules and so diffusion layers grow faster in wet oxidation processes. Two advantages of this faster growth rate are less processing time for a given layer thickness and the ability to grow thicker layers in reasonable time.

27. The lateral geometry, or pattern of the planar structures in integrated circuits, are produced by lithography and etching. Question 12 outlines the general steps in which lithography is used to produce patterns on a surface and etching is used to remove material to produce the patters in a material.

28. The most complicated, expensive and critical step microelectronics manufacture is lithography. Large numbers of very precise, high resolution patterns must be produced.

29. For pattern transfer in microelectronic manufacturing photolithography is most widely used. Additional lithography methods are;
i. X-ray lithography,
ii. electron-beam lithography,
iii. ion-beam lithography

In the different lithography processes different physical phenomena are used and so different equipment must be used. Electromagnetic radiation and particles are used and these are controlled and patterned differently.

30. To produce a photoresist mask on a silicon substrate a mask layer must be formed and a pattern produced on it. The steps are
the creation of a photomask,
- a thin film of opaque material is deposited on an optical purity, high stability quartz plate to be used in creating the photomask,
- the thin film is patterned by etching to form the photomask,

the creation of the photoresist
- liquid photoresist material is applied to the silicon substrate,
- the coated substrate is soft baked to evaporate solvents and case photoresist-substate adhesion,
- the photoresist is exposed to electromagnetic radiation through the photomask producing a stable, “hardened” pattern on the photoresist,
- the substrate is moved, indexed, stepped below the photomask to expose and pattern sequential areas of the photoresist,
- the photoresist is developed, the exposed areas of the photoresist remain and the unexposed areas are removed,
- the patterned photoresist on the substarate is hard baked to remove all solvents and harden the photoresist.

31. The two major classifications of photoresist materials are positive photoresists and negative photoresists. With negative photoresists the incident radiation in photoresist film production cause cross-linking in the polymer and making the photoresist less soluble in the developer.

32. A photoresist should
i. be resistant to down stream etching and diffusion or implantation, i.e., after it is applied and hard baked,
ii. have high resolution,
iii. have high sensitivity,
iv. adhere well to the substrate.
Resolution and sensitivity determine the accuracy and precision of the patterns that can be produced.

33. The two standard, and therefore important, wavelengths in photolithography using a mercury arc lamp are
i. the 436 nm, blue, g-line,
ii. the 365 nm, UV, I-line.

34. The three types of exposure methods used in photolithography are
i. contact printing which gives very high resolution,
ii. proximity printing which has higher throughput than the other methods,
iii. projection printing which result in no process induced resist-mask damage.

35. Wet etching uses a liquid chemical to remove material. Dry etching used a physical means to remove material, e.g., a plasma.

36. Undercutting is the removal of material under the photoresist, in the lateral direction for the typical horizontal photoresist-substrate configuration. Undercutting increases with time and so the lateral extent of undercutting varies with depth below the substrate surface. A quantitative measure of the amount of undercut is the etch bias, Figure 34-10.

37. If the photoresist-substrate is underetched the desired pattern is not produced and defects such as exposure or unexposure of doped and electrical contact regions occur and faults such as opens in doped regions and shorts in electrical result.

Overetching results in larger than allowable undercutting (Question 36) and possible damage as change in properties of the substrate and mask.

38. *i*. Etchant composition is the material content of the etchant and determines what interactions occur between it and the substrate and mask.
ii Etchant concentration is the relative proportion of the constituents of the etchant.

Important parameters of the etching process are etchant temperature and workpiece immersion time.

39.

Process	Etch mechanism	Advantages
Plasma etching (gaseous phase chemical etching)	partially ionized gas chemically reacts with the target surface removing material and producing gaseous by-products	high etch rate relatively simple process - low excitation energy - low radiation damage
Reactive ion etching (ion-assisted etching)	physical interaction between ions and target increasing rate of chemical action	etch rate higher than in sputter etching little undercutting in some situations
Sputter etching (ion milling)	impact between ions and target physically remove material	little undercutting

40. Thin films are layers of material less than about 1 μm thick. Thin film are important in microelectronic manufacturing because
- many of the structures and devices produced are built up as a series of thin films,
- thin films are used in many manufacturing processes, e.g., the photoresist in lithography.

41.

Type of Process	Mechanism	Advantages
Evaporative	condensation of metal vapor on substrate	simple - machines and equipment non-severe processing conditions
Sputtering	ions impact on charge material ejecting atoms toward and to the wafer	good step coverage can deposit metals, alloy, dielectrics

42.

Form of CVD	Applications
Atmospheric pressure CVD	producing microelectronic device layers, e.g., - passivation layers - smoothing and gettering layers e.g. producing components of devices - polysilicon gate electrodes
Low pressure CVD	producing microelectronic device components, e.g., - polysilicon gate electrodes
Plasma enhanced CVD	depositing passivating and protective layers on devices

43. In atmospheric chemical vapor deposition undesirable gas-phase reactions are controlled by using dilute gases. In low pressure chemical vapor deposition undesirable gas-phase reactions are controlled by using gas pressure.

44. Reactor designs are based on the fundamental physical process that controls and limits the deposition process. The reactions that occur at the deposition surface depend on the rate of reaction and the availability of reacting material. In atmospheric pressure chemical vapor deposition a large amount of the reacting gas is available at the surface and so the rate of deposition is controlled by the reaction rate – it is reaction rate limited. In low pressure chemical vapor deposition the availability of reacting material at the deposition surface controls the rate of reaction – it is mass transport rate to the surface limited.

For the reaction rate limited low pressure chemical vapor deposition process the important reactor characteristics are assuring uniform temperature over the entire gas mass in the reactor. This means and tight control over reactor temperature leading to heated wall reactors. For mass flow rate limited processes the control issue is assuring an adequate, uniform flow of gas over the entire deposition area. The flow of the reacting gas controls reactor design – nonuniform temperature in the reactor also can influence flow.

45. Two types of chemical vapor deposition reactor design are cold wall and heated wall reactors.
Hot-wall reactors keep the entire reaction zone at a uniform temperature providing good process temperature and flow control resulting in the advantage of uniformity of the deposited layer. The disadvantages of hot-wall reactors arise from deposition on the reactor walls. This may cause contamination of ongoing processes as aged deposits flake off the wall providing contaminants for the new or different material films. If reactors are dedicated to certain materials flexibility in types of materials that can be deposited is lost.

Cold-wall reactors are simpler than hot-wall reactors and so less expensive and easier to operate and maintain. The major disadvantage of them is the relatively less well controlled process temperature uniformity compared to hot-wall reactors. This leads to less temperature control and less uniform deposited layers.

46. The plasma enhanced chemical vapor deposition process an be run at lower temperatures than other chemical deposition processes. This has the advantage of allowing the desired reactions to occur while minimizing the effect of other temperature dependent processes, e.g., allowing deposition with minimizing diffusion of previously deposited material.

47. Epitaxy is the growth of a single crystal thin film on a surface with the film having the same crystal orientation as the surface. Epitaxial layers can be produced with fewer defects than doped layers, higher purity, more uniform dopant distribution and sharper transitions so that their use produces better electronic performance. Also, epitaxial layers can be used to ease geometric transitions between device layers since they maintain their desirable characteristics as layer thickness increases.

48. Contacts are the access points between the first metal layer of conduction lines and the underlying semiconductor. Vias are access points for contacts between the different layers of conduction lines.

49. Planarizarion is the production of a flat or planar surface on one or more of the layers that are built up during the production of integrated circuits. Plararization is needed because as the layers are produced distinct topography associated with each layer forms. If the topography becomes too uneven the structure and performance of subsequent layers becomes problematic. Non-flat surface can lead to short in the conducting layers and other problems.

50.Interconnect layers can be plararized by;
i. using a layer material that flows easily and inherently forms a planar surface, e.g., p-glass,
ii. etching with an etchant that preferentially etches high regions of the surface,
iii. chemical mechanical polishing which uses a combination of mechanical and chemical actions to remove material.

51. Electromigration is the movement of atoms over time due to an applied current. Electromigration is a concern in integrated circuit processing and use since the size and shape of conducting paths change. As conductor size and spacing are decreased the effects of electromigration increase and can even cause open circuits and short circuits

52. Wafer testing is intended to remove any defective dies or chips from the production stream. That is, defective dies are identified and removed and so resources are not spent on packaging dies that will not function.

53. A chip is an individual integrated circuit that is cut from the wafer on which many chips are produced.

54. Driving the increase in component density and die area is the desire to increase the number of chips produced on each wafer. This drives down the cost per chip.

55. Very small scale, or point, defects have large detrimental effects on integrated circuit yield. These small defects can be cause by atmospheric particles and to minimize this source of product contamination manufacturing is conducted in clean rooms.

56. Integrated circuit packages are made up of;
i. components to distribute electronic signals and power and provide interfacing to test equipment and the entire system in which the circuit will reside,
ii. components to protect the devices and circuitry.

57. In through-hole connections discrete electronic components are inserted into metal plated holes in the printed circuit board. Through hole technology provides the advantages of high joint strength and the ability to use many different kinds of components.

With surface mount technology electronic components are placed onto solder paste pads on the printed circuit board and soldered. Compared to through hole technology surface mount techniques provide the advantages of easily automated production and higher circuit board density. This leads to cost-effective manufacturing.

58. The two main classes of through-hole packages are dual in-line packages (DIP) and pin grid arrays (PGA).

59. The four types of surface mount lead geometries are;
i. butt lead or I-lead that has the advantages of cost savings if through-hole components have to be converted for use in surface mount processes,
ii. gull wing leads that provide the advantages of thinner packages, smaller leads, fine pitch, compatibility with most re-flow soldering processes, and that they can be self-aligning during soldering,
iii. J-leads have the advantages of ruggedness, easy inspection since solder joint are more visible and easier cleaning since the components have higher stand offs from the circuit board,
iv. solder balls used in ball grid arrays have the advantages of high lead density, self-aligning and they are less susceptible to deviations in parallelism between the component and board.

60. The major steps in conventional integrated circuit packaging are
- attachment of the die to the package,
- sealing of the package using either premolded or postmolded packages,
- formation of leads.

61. Three techniques for attaching and electrically connecting dies to integrated circuit packages are;
i. wire bonding or chip-and-wire attachment using an adhesive to attach the chip to the package and a wire to connect bonding pads on the chip and package,

ii. tape-automated bonding in which a polymer tape holding the lead circuitry is aligned with the die and bonded using raised temperature and applied pressure,
iii. flip-chip technology in which the chip and package bonding pads face each other.

62. Direct chip attachment or chip-on-board or direct mounting is a process in which the chip is directly attached to the circuit board. It differs from other integrated circuit packaging in that the chip itself is assembled onto the circuit board rather than a packaged chip. Disadvantages of this process are that it involves the shipping and handling of bare chips and the need for equipment to handle die-attachment while manufacturers have package-level equipment.

63. Chip scale packages are packages that add no more than 20% of additional board area to the chip. Chip scale packages are physical packages, not attachment methods. Direct chip attachment interconnection techniques are used with chip scale packages.

64. Multichip modules are chip carriers that package of more than one chip through direct chip attachment to fine line, thin film conductors within a ceramic carrier. They are advantageous in integrated circuit packaging because reduced distances between integrated circuits is possible

65. Printed circuit boards are the carriers that hold and connect the elements of a circuit. Printed circuit boards consist of a board composed of
i. laminated dielectric sheets comprising the base,
ii. metallic circuits or tracks for connecting the electronic components to be placed on the base
iii. pads of conducting material that serve as junctions for circuit elements.

66. Three alternative materials for the dielectric components of printed circuit boards are
i. epoxy-impregnated fiberglass which is the least expensive of the alternatives,
ii. polyamide which can be mechanically flexible and so can be made into flexible circuits,
iii. alumina or other ceramic which can be used to minimize thermal shock because of relatively high thermal conductivity compared to the other materials.

67. Plated through holes are holes that are plated with electrically conducting materials and serve as insertion points for circuit components. Via holes are plated holes that are connect the circuit on one side of the board to the circuit on the other side of the board.

68. Printed circuit boards are composed of layers of circuits. The circuits on different layers or different sides of an individual layer are connected by vias. Blind or partially buried vias extend from one side of the board to a layer in the interior of the board, they do not extent to the other free side of the board. Buried vias connect layers with in the interior of the board, they to not extent to either free side of the board. Through vias extend from the outermost circuit track on one side of the board to the outermost track on the other side of the board.

69. The four major steps in producing a multilayer printed circuit board are
i. production of circuits on inner layer laminations, (Question 70),
ii. lamination of layers,
iii. drilling and preparation of via holes,
iv. production of circuits on outer layers.

70. The two methods of circuitization of inner layers of printed circuit boards are
i. Subtractive circuitization in which
- the starting structure is a double sided copper coated laminate, panel,
- to which a dry photoresist is applied,
- followed by photolithographic exposure and development to produce the circuit pattern,
- and etching of the copper coating to produce the circuit,
- and stripping of the photoresist,
- then drilling of registration holes used in board assembly.

This process is less involved and more economical than the alternative additive circuitization.

ii. Additive circuitization is different than subtractive circuitization in that the circuit is formed by producing the circuit pattern directly by material deposition rather than by etching the circuit into a metal layer. Additive circuitization involves
- starting with a laminate in which registration holes have been drilled,
- drilling of any required via holes,
- exposing and developing an etch mask that exposes the underlying dielectric,
- preparing the dielectric for electroless deposition by adsorbing a catalyst on to it, the buttercoating or seeding process,
- deposition of a thin layer of electroless copper on the seeded dielectric,
- electroplating of thicker layers
- stripping of the resist.

This process provides higher resolution circuitry (finer lines and higher density) than subtractive circuitization.

71. Built-up multilayers are circuit boards that are produced by deposition and processing of one dielectric layer at a time. Vias are plated passageways used to connect one circuit layer to another. Microvias are via holes that are smaller than the approximately 200 micrometers diameter holes than can be produced by conventional mechanical drilling.

Laminates start with a dielectric layer and produce the circuit on it. Built-up multilayer manufacturing includes the deposition and processing of the dielectric as an integral, controllable part of the process.

Microvias are different from vias in size and production methods. Vias are larger than microvias and are usually produced by mechanical drilling and limited in size by the minimum drill size of about 200 micrometers. Micro vias are smaller than drilled vias and are produced by photoimaging, laser ablation and plasma etching.

72. The four major steps in assembling a through hole printed wiring assembly are
i. insertion of the circuit components,
ii. clinching and trimming of leads,

iii. soldering,
iv. postsolder cleaning.

73. Leads are trimmed and clinched after through hole insertion to decrease the effective size of them and so decrease the possibility of bridging of adjacent solder joints. Solder joint bridging produces electrical shorts in the circuit.

74. Four major steps in assembling surface mount printed wiring assemblies are
i. application of solder paste to the lands on the printed circuit board by screening, stenciling or dispensing,
ii. placement of the surface mount components,
iii. reflow of solder paste in an oven (or, less commonly, vapor phase soldering or condensation soldering),
iv. cleaning

75. Four methods for feeding components to robotic manipulators in pick-and-place robots are
i. tape or reel feeding which is widely used and most appropriate to high volume placement or where protective handling to minimize lead damage is needed,
ii. bulk feeding as with vibratory bowls is useful for prototyping of production processes,
iii. tube or stick feeders which are primarily used in smaller volume assemblers,
iv. waffle packs that hold different kinds of chips in specific locations so that pick-and-place robots can be programmed for positioning to pick the correct chip.

76. Startup and operation cost of surface mount assembly processes is most affected by the component placement step in the process.

Large costs are associated with component placement since the equipment cost is high (high startup costs) and this stage in the assembly process is the source of most product defects.

77. The four necessary zones in a surface mount solder reflow thermal profile (time-temperature trajectory) are
i. preheating to drive off nonflux volatiles from the solder paste,
ii. soaking to bring the entire assembly up to a temperature just below reflow temperature of the paste,
iii. a rapid rise in temperature to bring the solder paste temperature to above the reflow temperature for fluxing and wetting,
iv. cooling of the assembly.

Problems: no problems

Case Study: no case study

CHAPTER 35

Review Questions

1. Manufacture as a joined structure composed of several pieces is favored when the product needs to be large, composed of several parts with different properties or have a complex shape.

2.Consolidatin processes are those in which different material bodies are joined to produce the part or product. Examples of consolidation processes are welding of relatively large pieces together to form a part, powder metallurgy with the sintering of particles together and additive rapid prototyping techniques such as inkjet and 3-D printing.

3. Welding is the permanent joining of two material bodies by coalescence produced by temperature, pressure and metallurgical conditions.

4. The ideal metallurgical bond requires: (1) perfectly smooth, flat or matching surfaces, (2) clean surfaces, free from oxides, absorbed gases, grease, and other contaminants, (3) metals with no internal impurities, and (4) two metals that are both single crystals with identical crystallographic structure and orientation.

5. Surface roughness is overcome either by force, causing plastic deformation of the asperities, or by melting the two surfaces so that fusion occurs. In solid state welding, contaminated layers are removed by mechanical or chemical cleaning prior to welding or by causing sufficient metal to flow along the interface so that they are squeezed out of the weld. In fusion welding, the contaminants are removed by fluxing agents. Welding in a vacuum also serves to remove contaminants.

6. When high temperatures are used in welding, the metals may be adversely affected by the surrounding environment. If actual melting occurs, serious modification of the metal may result. The metallurgical structure and properties of the metal can also be adversely affected by the heating and cooling cycle of the weld process.

7. Thermal cutting is the separation of a piece of material into two pieces by the imposition of localized thermal energy such as with a flame, electric arc, laser beam, electron beam or the impingement of an oxygen stream onto a hot material.

8. Some common weld defects are cracks, cavities, inclusions, incomplete fusion between the weld and base materials, incomplete penetration of the weld into the materials to be joined, unacceptable weld shape, surface defects due to arc strikes, blemishes due to spatter, metallurgical changes that are detrimental to product performance and warping and distortion.

9. The four basic types of fusion welds are bead welds, groove welds, fillet welds, and plug welds, as illustrated in Figure 35-3.

10.Fillet welds are used for tee, lap, and corner joints. These configurations are shown in Figure 35-6.

11. The cost of making a weld is affected by the required edge preparation, the amount of weld metal that must be deposited, the type of process and equipment that must be used, and the speed and ease with which the welding can be accomplished.

12. When two pieces are welded together, they become one piece. Cracks in one segment can then cross the weld and continue propagation throughout the structure. Also, one segment constrains the others, so that properties such as fracture resistance and ductility can change appreciably.

13. The notch-ductility characteristics of metal can change markedly with a change in the size of the piece. While a small piece, such as a Charpy impact specimen, exhibits ductile behavior and good energy absorption down to low temperatures, a large structure of the same metal exhibits brittle behavior at higher temperatures. Because of the added constraint of mass, deformation and fracture modes that may absorb energy may be forbidden, resulting in a product with reduced fracture resistance, reduced ductility, and an elevated ductile-to-brittle transition temperature.

14. Excessive rigidity in a welded structure can restrict the material's ability to redistribute stresses, and thereby avoid failure. Structures and joints should be designed to have some flexibility.

15. In a fusion weld, a pool of molten metal is created, contained, and solidified within a metal mold formed by the segments being welded. This is actually a casting in a metal mold and has all of the structural and property features of such a casting.

16. The chemistry of a weld fusion zone may be complex because it is a combination of the filler metal and melted-back metal from the material being welded. See Figure 35-9.

17. Since the solidified weld will be in an as-cast condition, its properties and characteristics will not be those of the same metal in the wrought state. Therefore, electrode or filler metals are usually not selected on the basis of matching chemistry, but on the basis of having properties in the as-solidified or as-deposited condition that equal or exceed those of the base metal.

18. Fusion weldments may exhibit all of the problems and defects observed with castings, including: gas porosity, inclusions, blowholes, cracks, and shrinkage. Rapid solidification and cooling may lead to: inability to expel dissolved gases, chemical segregation, grain-size variation, grain shape problems, and orientation effects.

19. In the heat-affected zone, temperature and its duration vary widely with location. This variation in thermal history produces a variety of microstructures and a range of properties.

20. Structure and property variations in heat-affected zones can include: phase transformations, grain growth, precipitation (or overaging), embrittlement, and even cracking.

21. Due to possible changes in structure, the heat-affected zone may no longer possess the desirable properties of the parent metal, and, since it was not molten, it does not have the selected properties of the weld metal. Consequently, it is often the weakest area of the weld in the as-welded condition. Except when there are obvious defects in the weld deposit, most welding failures originate in the heat-affected zone.

22. Low heat input rate to welding processes heat a large area of the workpieces and so produce high total heat content, slow cooling rates, large heat affected zone. The resulting structures can have low strength and hardness and high ductility (analogous to annealing). Residual stresses are expected to be lower than high heal input rate processes that produce localized, small, high temperature zones interacting with surrounding cooler zones.

23. When attempting to heat-treat products after welding, numerous problems can arise in producing controlled heating and cooling in the often large, complex-shaped structures that are typically produced by welding. Furnaces, quench tanks, and related equipment may not be available to handle the full size of the welded assembly.

24. Pre- and post-heating operations can reduce the variation (and sharpness in the variation) in microstructure. The cooling rate in both the weld deposit and adjacent heat-affected zone is reduced, producing more gradual changes in microstructure.

25. In brazing and soldering, the base and filler metals are usually of radically different chemistry. The elevated temperatures of joining can promote interdiffusion. Intermetallic phases can form at the interface and alter the properties of the joint - usually imparting loss of both strength and ductility .

26. Residual stresses can produce several kinds of undesirable effects including
- residual stress states that act in combination with applied stresses to raise the effect stress acting in a part to above the failure stress,
- change of part shape, warping, as the residual stresses produced during processing of a held or fixed part rearrange themselves when the part is released from the fixture,
- change in dimensions locally.

27. Reaction-type residual stress is caused by restraining the parts during welding. If the parts are not free to move in response to loads applied during welding when the entire structure is assembled there is rearrangement of the stress state. Reaction stresses result.

28. The magnitude of the reaction stresses is an inverse function of the length between the weld joint and the point of fixed constraint.

29. The amount of distortion in a welded structure can frequently be reduced by: forming the weld with the least amount of weld metal necessary to make the joint; use faster welding speeds to reduce the amount of heating of adjacent metal; use the minimum number of welding passes; permit the base metal segments to have as much freedom of motion as possible; and, weld to the point of greatest freedom (as from the center to the edge) . Weld surfaces can be peened to induce offsetting compression.

30. If plastic flow can occur in response to residual stresses the effects of the residual stress is mitigated. A plastic flow zone forms, plastic flow occurs, stress is relieved or surrounded by an elastic zone constraining the plastic zone. Residual stresses will have harmful effects if the residual stress acts along with a stress raiser such as a notch and if the structure is very rigid and no or very little plastic flow can occur.

31. When welded structures are subsequently machined, the material removal frequently unbalances the residual stress equilibrium, and the material distorts to achieve a new balance of forces. In essence, it distorts during machining. Weldments that are to undergo appreciable machining should be given a stress-relief heat treatment prior to the machining operation.

32. The cracking of weldments can be reduced by designing joints to keep restraint to a minimum, and selecting metals and alloys with welding in mind. Thin materials are more resistant to cracking than thicker sections. The size and shape of the weld bead should be properly selected and maintained. Weld profile (penetration depth) can affect cracking. By slowing the cooling of the weld area and inducing plasticity into the material, the tendency to crack can be further reduced. Preheats, postheats, and stress reliefs can be used, along with efforts to remove hydrogen from the weld area.

33. Weldability and joinability are nebulous terms since the performance of a process depends on a number of material and process characteristics. A material may produce a very good quality weld in one process and so be weldable, while in a different welding process the results may be unacceptable and the material is not weldable. Similarly, and even more extreme, a material may be easy to weld and produce a good quality joint at one set of welding conditions and unacceptable results in the same welding process using different conditions.

Problems:

1. The assessment is not fair, because a subsequent examination of the riveted ships revealed a number of similar cracks. These cracks, however, simply traveled to the edge of the plate and stopped. Welding, on the other hand, produces monolithic structures. The cracks can cross the welds and continue into and through adjacent pieces. While the problem was a material problem, it became far more apparent when welding was used to produce the large, one-piece assemblies.

The problem was later identified as a metallurgical one related to the high ductile-to-brittle transition temperatures of the steel being welded. Additional knowledge of the phenomena, coupled with the selection of materials with lower transition temperatures, has permitted the safe use of welded-hull ships under most of the temperatures likely to be encountered.

(NOTE: While not a welded-hull ship, it is this same ductile-to-brittle transition phenomena that is suspected a playing a significant role in the sinking of the Titanic.)

2. Some possible corrective measures to eliminate or reduce cracking include: (1) possible use of a lower carbon steel, (2) substitution of a low-hydrogen type electrode, and (3) use of preheating and possibly some post-heating if the carbon content of the steel cannot be reduced.

3. a. Based on the desire to minimize constraint, one should resist the natural tendency to fabricate the exterior box and then insert the interior subsections. Instead, the preferred sequence would begin with the innermost welds and progress outward. The initial welds might be 4 and 5 -- then 8 and 9. Welds 3, 7, 6 and 10 would follow, and then on to the final assembly at 1 and 2 and 11 and 12.

b. Various "rules" could be proposed, each designed to reduce the amount of restraint on the weld or the number of welds that must be made under restraint. When restrained welds must be made, efforts could be made to maximize the length of material, or distance to the restraint. (NOTE: If 3/100-inch elastic stretching must be provided to compensate for weld shrinkage, this would require a 3% stretch for a 1-inch segment, 0.3% for a 10-inch segment, and 0.03% for a 100-inch segment.)

Case Study: no case study

CHAPTER 36

Review Questions

1.The combustion of oxygen and acetylene involves a two-stage reaction. In the first stage,

$C_2H_2 + 02$ --> $2 CO + H_2$

And in the second stage,

$2C0 + 02$ --> $2C0_2$ $H_2 + 1/2\ 02$ --> H_20

The outer flame region preheats the metal and protects it from the surrounding atmosphere. The inner part of the flame produces the required high temperature.

2. The maximum temperature in an oxyacetylene flame occurs at the end of the inner cone where the first stage of combustion is complete.

3. The outer zone of an oxyacetylene flame serves to preheat the metal and provides shielding from oxidation, since some of the oxygen from the surrounding air is used in the secondary combustion.

4. The three types of oxyacetylene flames that can be produced by varying the oxygen-to-acetylene ratio are: a neutral flame, oxidizing flame (with excess oxygen), and a carburizing or reducing flame (with excess fuel).

5. MAPP, while providing a slightly lower temperature flame, is more dense than acetylene, providing more energy for a given volume. It can be stored safely in ordinary pressure tanks.

6. The tip size of the torch can be varied to control the shape of the inner cone, the flow rate of the gases, and the size of the material that can be welded. Larger tips permit greater flow of gases, resulting in greater heat input without requiring higher gas velocities that might blow the molten metal from the weld puddle. Thicker metal requires larger tips.

7. A filler metal is extra metal added between the two parts being welded. Filler metal is needed since there are usually gaps between the edges being welded and these gaps need to be filled. It is better to add metal to fill the gaps than to use metal from the pieces being welded because that would change the welded section size and shape.

8. Welding flux
- cleans the surfaces to be welded,
- removes contaminants, primarily oxides,
- produces a gaseous shield around the welding zone preventing oxidation,
- produces a slag that as it solidifies protects the cooling weld pool.

9. The low heat input rate in oxyfuel gas welding leads to large heated areas that can cause distortion and changes in metal properties in areas removed from the welded region.

10. The use of oxyfuel processes is attractive since the equipment is portable, inexpensive and versatile. For example, oxyfuel processes can be used in welding, brazing, soldering, cutting and as the heat source for bending, forming, straightening and hardening.

11. When torch cutting nonferrous metals, the metal is merely melted by the flame and blown away to form a gap, or kerf. When ferrous material is being cut, it is heated to a sufficient temperature that the iron will then oxidize (burn) rapidly in the stream of oxygen that flows from the torch. Thus, the oxyfuel flame first raises the temperature of the metal and then the oxygen content is raised to continue the cutting, the iron oxide being expelled from the cut by the gas pressure of the torch.

12. When ferrous metal emerges from a continuous casting operation, its temperature will already be above the necessary 2200^0F, so only a supply of oxygen through a small pipe is necessary to start and maintain cutting. This is known as oxygen lance cutting (LOC).

13. The tip arrangement in an oxyacetylene, cutting torch is different from that of an oxyacetylene welding torch. The cutting torch contains a circular array of holes through which the oxygen-acetylene mixture is supplied for the heating flame. A larger hole in the center supplies a stream of oxygen to promote the rapid oxidation and blow the formed oxides from the cut.

14. Cutting torches can be mechanically manipulated by a number of means, including driven carriages (as for straight cuts), template-tracers, CNC machines, and industrial robots.

15. In order to cut underwater, a supply of compressed air must be added to the torch to provide the secondary oxygen for the oxyacetylene flame and keep the water away from the zone where the burning of the metal occurs.

16. If a curved plate is to be straightened by flame straightening, the heat should be applied to the longer surface of the arc. The hot metal will be upset and will contract upon cooling, reducing the length of that region.

17. Flame straightening cannot be used on thin materials because the metal adjacent to the heated area must have sufficient rigidity to resist transferring the buckle from one area to another.

Problems: no problems

Case Study: no case study

CHAPTER 37

Review Questions

1.Early attempts to develop arc welding were plagued by instability of the arc, requiring great amount of skill to maintain it, and contamination and oxidation of the weld metal resulted from atmospheric exposure at such high temperatures. In addition, the metallurgical effects of such a process were not well understood.

2. The three types of current and circuit conditions used in arc welding are: alternating current, straight polarity direct current (workpiece is positive), and reversed polarity direct current (workpiece is negative).

3. In the consumable electrode processes, the electrode melts to supply the needed filler metal to fill the voids in the joint. With a nonconsumable electrode, such as tungsten, a separate metal wire must be used to supply the filler metal.

4. The three modes of metal transfer that can occur in arc welding are: globular, spray, and short circuit. They are illustrated in Figure 34-2.

5. Arc welding processes require the specification of: welding voltage, welding current, arc polarity, arc length, welding speed, arc atmosphere, electrode or filler material, and flux.

6. The four primary consumable electrode arc welding processes are;
i. shielded metal arc welding,
ii. flux cored arc welding,
iii. gas metal arc welding,
iv. submerged arc welding.

7. Electrode coatings can play a number of roles, among them:

> (1) provide a protective atmosphere, (2) stabilize the arc, (3) act as a flux to remove impurities from the molten metal, (4) provide a protective slag to accumulate impurities, prevent oxidation, and slow the cooling of the weld metal, (5) reduce weld metal spatter and increase the efficiency of deposition, (6) add alloy elements, (7) affect arc penetration, (8) influence the shape of the weld bead, and (9) add additional filler metal.

8. Coated electrodes are classified by the tensile strength of the deposited weld metal, the welding position in which they may be used, the type of current and polarity (if direct current), and the type of covering. A four or five-digit system of designation is used, as presented in Figure 34-3.

9. Shielded metal arc electrodes are baked just prior to welding to remove all moisture from the coating, a source of hydrogen in the welds.

10. The gases that form when the electrode coating melts and vaporizes
- provide a protective atmosphere for the welding zone,
- provide ionizing elements to help stabilize the arc,
- help reduce weld spatter,
- increase deposition efficiency,
- influence weld bead shape.

11. The slag coating in a shielded metal arc weld serves to entrap impurities that float to the surface, protect the cooling metal from oxidation, and slow down the cooling rate of the weld metal to prevent hardening.

12. Electrodes having iron powder in the coating significantly increase the amount of metal that can be deposited with a given-size electrode wire and current.

13. Continuous shielded metal arc welding faces the problem of providing electrical contact (through the coating) to the center filler-metal wire. Electrode length is limited because the current must be applied near the arc to prevent the electrode from overheating and ruining the coating. Thus, while some continuous arc welding processes have been developed, most shielded metal arc welding is performed with finite length stick electrodes.

14. With the flux in the center of an electrode, the electrode is less bulky (since no binder is required to hold it onto the outside) and electrical contact can be maintained directly with the surface of the electrode. Thus, flux-cored arc welding becomes something like continuous shielded metal arc welding.

15. The current in fluxed-core arc welding can be higher than in shielded metal arc welding since overheating of the electrode is less of a problem. With less concern about overheating current can be increased.

16. Compared to shielded metal arc welding, gas metal arc welding provides the advantages of
- there being no need for flux and so the electrode can an uncoated, continuous wire,
- it can be applied to all metals,
- the heat transfer and weld penetration can be controlled to some extent by choice of shielding gas.

17. In gas metal arc welding helium produces the hottest arc and deepest weld penetration and carbon dioxide provides the lowest arc temperatures and shallowest penetration. Argon produces temperatures and penetrations intermediate between helium and carbon dioxide.

18. In the pulsed-arc gas metal arc welding process, a low welding current is first used to create a molten globule on the end of the filler wire. A burst of high current is then applied, which "explodes" the globule and transfers the metal across the arc in the form of a spray.

19. Because of the reduced heat input and temperatures of the pulsed arc technique: thinner material can be welded, distortion is reduced or eliminated, workpiece discoloration is minimized, heat-sensitive parts can be welded, high-conductivity metals can be joined, electrode life is extended, electrode cooling techniques may not be required, and fine microstructures are

20. Some of the primary process variables in gas metal arc welding are type of gas, welding current/voltage and rate of electrode advancement.

21. In submerged arc welding, the flux provides excellent shielding of the molten metal and a sink for impurities. In addition, the unmelted flux provides a thermal blanket to slow down the cooling of the weld area and produce a soft, ductile weld.

22. Submerged arc welds can be performed at high welding speed, with high deposition rates, deep penetration, and high cleanliness. However, submerged arc welds are generally restricted to flat welds because of the need to form an area of molten slag and keep it in place over the molten weld metal. Extensive flux handling, possible contamination of the flux by moisture, the large volume of slag that must be removed, the high heat inputs that promote large grain sizes, and the slow cooling rates are other negative features of the process. The process is not suitable for high-carbon steels, tool steels, aluminum, magnesium, titanium, lead or zinc.

23. In bulk welding, iron powder is deposited into the prepared gap (beneath the flux blanket but on top of the backing strip) as a means of increasing the deposition rate. A single pass can deposit as much weld metal as seven or eight conventional submerged arc passes.

24. Stud welding is a special adaptation of arc welding that has been developed to weld fasteners into place.

25. The ceramic ferrule placed over the stud in stud welding acts to concentrate the arc heat and simultaneously protect the heated metal from the atmosphere. It also serves to confine the molten or plastic metal to the weld area and shapes it around the base of the stud.

26. Carbon dioxide cannot be used in gas tungsten arc welding because it does not adequately protect the tungsten electrode.

27. Since filler metal deposition rate increases with increasing wire temperature, Figure 37-13, deposition rate can be increased by increasing wire temperature. This can be done by electrically preheating the filler wire and oscillating the hot wire in the high temperature zone.

28. Some of the attractive features with gas tungsten arc welding are the production of high quality, clean, localized, symmetric welds without use of flux. Many of the

advantages accrue due to the ability to use various shielding gases and shielding gas efficiency.

29. In gas tungsten arc spot welding the weld nugget begins to form at the surface of the work, In most resistance spot welding processes the weld nugget forms at the interface between the two workpieces, where the resistance is the highest.

30. In plasma arc welding, it is the flow of hot gases that actually transfers heat to the workpiece and melts the metal.

31. In plasma arc welding there is a flow of inert gas through the nozzle where it is heated to form a plasma, called orifice flow. This gas flow is the source of heat to the weld zone. There is also a flow inert gas around the welding zone that provides weld pool shielding.

32. Plasma arc welding offers greater energy concentration, fast welding speeds, deep penetration, a narrow heat-affected zone, reduced distortion, less demand for filler metal, higher temperatures, and a process that is insensitive to arc length. Nearly all metals and alloys can be welded.

33. The primary difference between plasma arc welding and plasma arc cutting is the pressure of the gas flowing out of the orifice. At lower pressures, the molten material simply flows into the joint and solidifies to form a weld. At higher pressures, the molten material is expelled form the region and the process becomes plasma cutting.

34. The kerf in thermal cutting processes is the slit or separation region between the parts of the workpiece being cut.

35. In the oxygen arc cutting process, the stream of oxygen is directed onto the hot, incandescent metal. It reacts with the oxidizable metal, liquifies, and is expelled, producing the cut.

36. Plasma arc cutting is used to cut high-melting-point metals because this process produces the highest temperature available from any practical source. Virtually any material can be melted and blown from the cut.

37. Radial impingement of water on the arc was found to provide the necessary constriction of the arc, producing the intense, highly-focused arc needed to make a narrow, controlled cut in plasma arc cutting. Magnetic fields have also been used to constrict the arc.

38. Compared to the oxyfuel technique, plasma cutting is more economical, more versatile, and much faster. Narrow kerfs and smooth surfaces are produced, and surface oxidation is almost eliminated by the cooling water spray. The size of the heat-affected zone is significantly reduced and heat-related distortion is virtually eliminated.

39. Because of the low rate of heat input, oxyacetylene cutting will produce a rather large heat-affected zone. Arc cutting produces effects similar to arc welding. Plasma arc cutting is so rapid that the heat-affected zone is less than 1/16 inch.

40. Cutting tends to produce surfaces in residual tension. If subsequent machining removes only a portion of the total surface, the resulting imbalance of stresses may cause warping.

41.In addition to the effect of residual stresses, Flame- or arc-cut edges are rough and contain geometrical notches that can act as stress raisers and reduce the fatigue performance and toughness of a product. Thus, it is suggested that the cut surface and heat-affected zone should be removed (or at least subjected to a stress relief) on a highly-stressed machine part.

Problems: no problems

Case Study: “Bicycle Frame Repair”

The adhesive bonding employed in the original construction was selected because the material properties are heat-sensitive, and the heat of an elevated-temperature joining method would significantly diminish the strength of the tubing material.

a.

1. If the material were cold-drawn tubing, the heat-affected zone created by the weld repair would contain regions of recovery, recovery and recrystallization, and possibly recovery, recrystallization and grain growth. (These phenomena are discussed in Chapter 3, and the heat affect section of Chapter 35-39) These structures are significantly weaker than the original cold-drawn material, and would be subject to failure by the ductile overload mechanism. While the weld itself was not really defective, the failure occurred as a result of the welding process -- namely the creation of a heat-affected zone that adversely altered the properties of the base material. Therefore, the second failure was indeed the result of the welding repair.

2. If the tubing had been age hardened material, regions of the heat affected zone would have been hot enough to re-solution treat (and then produce a totally new structure upon subsequent cooldown), while other locations would have been reheated enough to permit overaging. These effects also serve to reduce the strength of the material, and increase the likelihood of ductile overload failure. Once again, the weld itself may have been of high quality, but the welding process was responsible for the alteration of the base material, and the subsequent failure.

3 . The repair of these materials would be limited to low temperature methods, such as adhesive bonding or possibly brazing. Both of these methods gain strength by increasing the area of bonding, so the use of some form of large area internal lug or external sleeve

would be desirable, as opposed to a simple butt joint repair.

b. Bicycle frames could be constructed from titanium or magnesium. Titanium offers clear advantages over magnesium and some advantages over steel. While more costly than steel, titanium has density of about 60% that of steel, modulus of elasticity of about half that of steel and can have comparable strength of steel depending on alloy and heat treatment. The strength-to-weight ratio is attractive for a high performance bicycle engineered for minimum weight. Titanium is very corrosion resistant and so the bicycle frame would not have to be coated, and perhaps the bare metal look would be a selling point. Most likely the titanium tubes would be produced by extrusion and the finished tubing frame members welded. Adhesive joining is possible.

Titanium bicycle frames are in production, e.g.,
www.vanguardtitanium.com
www.morati.com
www.biam.com/ti_bicycle.htm

Magnesium has density about 25% that of steel and a modulus of elasticity of 20% - 25% that of steel. The strength to weight ratio is attractive but to achieve strength near that of a steel bicycle frame thick sections might be required. The use of several different metals in the bicycle could be a problem since magnesium is susceptible to galvanic corrosion. Magnesium has a hexagonal close packed structure so is relative less ductile than metals with other structures and so the tubes for the frame would be extruded in the hot working region. Benefits of strain hardening would no be available. The frame would be assembled by welding under inert gas. Adhesive joining is also possible.

c. With its light weight, modulus of elasticity of about 50% greater than that of steel and strength comparable to steel, beryllium is a likely candidate for a bicycle frame based on mechanical properties. Practical limitations work against its use. It is very expensive in forms useful for bicycle frame construction, is so stiff that it is probably not useful for a bicycle frame and it is toxic.

d. In addition to joining the design of the tubes should be considered. Specifically, the orientation of the reinforcing fibers needs to specified. Bicycle frames are rigid in the plane of the frame due to the geometric design. Torsion of the frame components has to be considered and so fiber orientation in the fiber-reinforced composite tubes should be such as to make the tubes torsionally rigid. The tubes can be assembled into the frame using adhesives and plugs just as the original frame in this case study.

CHAPTER 38

Review Questions

1.In resistance welding, pressure is applied initially to hold the workpieces in contact and thereby control the electrical resistance at the interface. After the proper temperature is attained, the pressure is increased to bring about coalescence of the metal.

2. Because pressure is applied, coalescence occurs at a lower temperature than required for other forms of welding. Many resistance welds are formed without any melting of the base metal.

3. Applying additional pressure after coalescence in resistance welding provides some forging action with some grain refinement due to the deformation, and possibly some strain hardening. Additional heating can also be applied with the intent of tempering and/or stress relieving the weld zone.

4. Fluxes and shielding gases are used in welding to protect the welding zone form undesirable effects due to the ambient, native atmosphere. Since the pressure exerted between the workpieces in resistance welding precludes the introduction of the surrounding atmosphere, no flux or shielding gas is needed.

5. The total resistance between the electrodes consists of three components: (1) the resistance of the workpieces, (2) the contact resistance between the electrodes and the work, and (3) the resistance between the surfaces to be joined, known as the faying surfaces.

6. The resistance between the electrodes and the workpiece can be minimized by using electrode materials that are excellent electrical conductors, by controlling the shape and size of the electrodes, and by using proper pressure between the work and the electrodes .

7. If too little pressure is used, the contact resistance is high and surface burning and pitting of the electrodes can result. If the pressure is too high, molten or softened metal may be squirted or squeezed from between the faying surfaces or the work may be indented by the electrodes.

8. Ideally, moderate pressure should be applied to hold the workpieces in place and establish proper resistance at the interface prior to and during the passage of the welding current. The pressure should then be increased considerably to complete the coalescence and produce the forged, fine-grain structure.

9. The current applied in resistance welding varies through the process. A welding current is used and later in the process a postweld heating current is applied, Figure 38-3. The welding current is usually large, up to about 100,000 A.

10. Resistance spot welding is the simplest and most widely used form of resistance

welding.

11. Spot weld nuggets typically have sizes between 1/16 and 1/2 inch in diameter.

12. The two basic types of stationary spot welding machines are the rocker-arm machine and the press-type machine. The rocker-arm design is used for light-production work where complex current-pressure cycles are not required. Larger machines and those used at high production rates are generally of the press-type design.

13. Spot welding guns allow the process to become portable. The welding unit can now be brought to the work, greatly extending the use of spot welding in applications where the work is too large to be positioned on a welding machine (such as automobiles).

14. A transgun is a spot welding gun with an integral transformer. When accurate positioning is required in an articulated arrangement, such as an industrial robot, transguns may not be attractive because of the added weight of the integral transformer at the end of the arm.

15. The functions of resistance welding electrodes are to conduct current, set current density, apply force and dissipate heat. The electrode should not combine, alloy, with the work materials. In order to effectively accomplish these functions resistance welding electrodes must have appropriate values of electrical and thermal conductivity, hot compressive strength, melting temperature and composition. While not a physical, mechanical or chemical property, electrode shape also is a consideration in electrode selection.

16. Steel is clearly the most common spot-welded metal.

17. The practical limit of thicknesses that can be spot-welded by ordinary processes is about 1/8 inch (3 mm), where each piece is the same thickness. When thicknesses vary, a thin piece can be easily welded to another piece that is much thicker than 1/8 inch.

18. When metals of different thickness or different conductivities are to be welded, they can generally be brought to the proper temperature in a simultaneous manner by using a larger electrode or one with higher conductivity against the thicker or higher-resistance material.

19. In roll-spot welding, the seam is actually a series of overlapping spot welds, generally produced by two rotating disk electrodes. Continuous seam welding, on the other hand, applies a continuous current through rotating electrodes.

20. Projection welding enables multiple spot-type welds to be made simultaneously, and reduces the problems associated with electrode maintenance.

21. The number of projections is limited only by the ability of the machine to provide the required current and pressure.

22. Some of the attractive features of resistance welding processes as techniques for mass production include: (1) they are very rapid, (2) the equipment is semiautomatic or fully automated, (3) they conserve material (no filler metal is required), (4) Skilled operators are not required, (5) Dissimilar metals can be easily joined, and (6) a high degree of reliability and reproducibility can be achieved.

23. The primary limitations to the use of resistance welding are: (1) the high initial coat of the equipment, (2) limitations to the type of joints that can be made, (3) skilled maintenance personnel are required to service the control equipment, and (4) some materials require special surface preparation prior to welding.

24. Because of the rapid heat inputs, short welding times, and rapid quenching by both the base metal and the electrodes, the cooling rates in spot welds can be extremely high. In medium-and high-carbon steels, martensite can readily form, and a post-weld heating is generally required to temper the weld.

25. The forge welds of a blacksmith were somewhat variable in nature and highly dependent on the skill of the individual because his heat source was somewhat crude, temperatures were uncertain, and it was difficult to maintain metal cleanliness.

26. Coalescence is produced in cold welding by only the application of pressure. No heating is used, the weld resulting from localized pressures that produce 30 to 50% cold deformation.

27. By coating portions of one sheet with a material that prevents bonding and then roll bonding with another sheet, products can be made that are bonded only in selected regions. If the no-bond region is then expanded, the expanded regions can form flow channels for fluids.

28. Inertia welding differs from friction welding in that the moving piece is now attached to a rotating flywheel. The flywheel is brought to speed, separated from the driving motor, and the rotating assembly is pressed against the stationary member. The kinetic energy is converted to heat during the deceleration.

In friction welding, the contact is made while the driven piece is connected to the motor, all rotation is stopped, and the pieces are further pressed together.

29. In the friction and inertia welding processes, surface impurities tend to be displaced radially into a small upset flash that can be removed after welding, if desired.

30. Friction and inertia welding is restricted to joining round bars or tubes of the same size, or connecting bars or tubes to flat surfaces. In addition, the ends of the workpieces must be cut true and be fairly smooth.

31. In friction welding one piece of the two-piece workpiece pair is rotated while in contact with the other. The resulting heat and pressure produce welding between the two

workpieces. In friction stir welding there is a three-piece system, two plates or workpieces to be joined and a non-consumable probe, analogous to a tool. The probe rotates while in contact with both workpieces, softened work material flows around the probe and into the workpiece joint area and the workpieces joined.

32. Ultrasonic welding is restricted to the joining of thin materials, such as sheet, foil, and wire, or the attaching of thin sheets to heavier structural materials.

33. Ultrasonic welding can be used to join a number of metals and dissimilar metal combinations (even metals to nonmetals). Since temperatures are low, the process is an attractive one for heat-sensitive materials. The equipment is simple and reliable, and only moderate operator skill is required. Surface preparation and energy requirements are less than for competing processes.

34. Diffusion welding is a solid state bonding that occurs when properly prepared surfaces are maintained in contact under pressure and time at elevated temperature. Quality of the bond is highly dependent upon surface preparation.

35. If the interface of an explosive weld is viewed in cross section, it would exhibit a characteristic wavy configuration at the interface. See Figure 38-20.

36. A thermit weld is quite similar to a metal casting in that molten metal is produced externally and is introduced into a prepared cavity. In the case of the thermit weld, the super-heated metal is produced from the reaction between iron oxide and aluminum, and then flows into a prepared joint providing both heat and filler metal. Runners and risers must be provided, as in a casting, to channel the molten metal and compensate for solidification shrinkage.

37. In thermit welding, heat comes from the superheated molten metal and slag obtained from the exothermic reaction between a metal oxide and aluminum.

38. Thermit welding can be used to join thick sections of material, particularly in remote locations where more sophisticated welding equipment is not available.

39. In electroslag welding, heat is derived from the passage of electrical current through a liquid slag. Resistance heating within the slag causes the temperature increase.

40. In electroslag welding, the molten slag serves to melt the edges of the metal being joined, as well as the fed electrodes supplying the filler metal. In addition, the slag serves to protect and cleanse the molten metal.

41. Electroslag welding is most commonly used to vertical or circumferential joints because of the need to contain the pool of molten slag. The process is particularly attractive for the joining of thick plates (up to 36-inches thick).

42. High vacuum is required in the electron beam chamber of an electron beam welding

machine because electrons cannot travel well through air. In many operations, the workpiece is also enclosed in the high-vacuum chamber and must be positioned and manipulated in this vacuum.

43. In addition to having to position and manipulate production pieces in a high vacuum, there are size and shape restrictions imposed by the size of the actual vacuum chamber. The high vacuum must be broken and reestablished as pieces are inserted and removed, significantly impairing productivity. If welding is performed on pieces that are outside of the vacuum chamber, high capacity vacuum pumps must be used to compensate for leakage through the electron-emitting orifice. The penetration of the beam and the depth-to-width ratio of the molten region are considerably reduced as the pressure increases.

44. High-voltage electron beam welding equipment emits a considerable quantity of harmful X-rays and thus requires extensive shielding and indirect viewing systems for observing the work.

45. Almost any metal can be welded by the electron beam process. Dissimilar metals can be welded. The weld geometry offers a narrow profile and remarkable penetration. Heat input and distortion are low, and the heat-affected zone is extremely narrow. Welding speeds are high, and no shielding gas, flux, or filler metal is required.

46. Compared to electron beam welding, laser beam welding: (1) does not require a vacuum environment, (2) generates no X-rays, (3) can employ reflective optics to shape and direct the beam, and (4) does not require physical contact between the workpiece and the welding equipment (the beam can pass through transparent materials).

47. Laser beams are highly concentrated sources of energy and the resulting welds can be quite small. While the power intensity is quite high, the weld time is extremely small and the total heat input can be quite low. For these reasons, laser beam welds are quite attractive to the electronics industry.

48. In the laser beam cutting process, a stream of "assist gas" is often used to blow the molten metal through the cut, cool the workpiece, and minimize the heat-affected zone.

49. Through the use of a fiber-optic cable, laser energy can be piped to the end of a robot arm, eliminating the need to mount and maneuver a heavy, bulky tool that would produce elastic flexing of the components of the robot arm and affect the accuracy of positioning. Cutting and welding can then be performed with the multiple axes of motion of an industrial robot or CNC machine.

50. Laser spot welding can be performed with access to only one side of the joint. It is a non-contact process, involves no electrodes, and produces no indentations. Weld quality is independent of material resistance, surface resistance, and electrode condition. The total heat input is low, and the heat-affected zone is small.

51. The flashing action in flash welding must be long enough to provide heat for melting

and to lower the strength of the metal to allow for plastic deformation. Sufficient upsetting should occur that all impure metal is squeezed out into the flash and only sound metal remains in the weld.

52. Only the thermoplastic polymers can be welded, since these materials can be melted and softened by heat without degradation. The thermosetting polymers do not soften with heat but tend only to burn or char.

53. Thermoplastic polymers can be welded by methods that use mechanical movement or friction to generate the required heat (such as ultrasonic welding, friction welding, and vibration welding), and methods that employ external sources of heat (such as hot-plate welding, hot-gas welding, and resistive or inductive implant welding) .

54. Surfacing methods are usually used to apply;
- carbon and low-alloy steels,
- high-alloy steels and irons,
- cobalt-based alloys,
- nickel-based alloys,
- copper-based alloys,
- stainless steels,
- ceramics,
- refractory carbides, oxides, borides, silicates.

55. Surfacing materials can be deposited by nearly all of the gas-flame or arc welding methods, including: oxyfuel gas, shielded metal arc, gas metal arc, gas tungsten arc, submerged arc, and plasma arc. Laser hardfacing has also been performed.

56. Several of the thermal spray processes are adaptations of oxyfuel welding equipment involving some form of material feed. Electric arcs can be used to melt the material and produce the molten particles, and plasma spray processes are also quite common .

57. Thermal spraying is similar to surfacing and is often applied for the same reasons. The thermal spray coatings are usually thinner, and the process is more suited for irregular surfaces and heat sensitive substrates.

58. In metallizing, the bond between the deposited material and the base metal is a purely mechanical one. To enhance mechanical interlocking, the surface can be roughened by a variety of methods, including: grit blasting or the machining of grooves followed by deformation to roll over the crests or mushroom the flat upper surfaces.

59.In spraying coatings a material layer is formed so material can be added to a substrate and the material properties of the coating can be controlled to produce desirable surface behavior in use. Applications include
- restoring worn parts to original dimension by spraying material followed by finishing operations,
- producing protective coating such as for corrosion protection,

- hard surfacing to produce wear resistant surface layers while maintain the desirable properties of the substrate, including economic consideration or characteristics,
- applying thin coatings in situations where establishing a plating operation is not warranted,
- applying electrically conduction coatings,
- applying optical coatings,
- applying decorative coatings,
- producing tailored surface characteristics such as specified surface profile or layered structure.

Problems:

1. This is really an open-ended library-type research assignment, and the results will vary considerably with the specific process chosen to investigate.

2. Thermosetting polymers can be joined by such processes as:
adhesive bonding, threaded fasteners, riveting, and other types of mechanical joining. Similar restrictions apply to the elastomers, but threaded fasteners are not as viable. For ceramic materials, the most common method of joining is adhesive bonding. Mechanical joining requires the use of large washers or load distributing devices, and rivets are seldom employed.

Case Study: Field Repair to a Power Transformer Case

1. The primary restriction here is the need for portability. A process, such as oxyacetylene welding requires only bottled gas, flow regulators and an appropriate torch. These can be scaled and are readily portable. The arc welding methods require a power supply, and an AC, plug-in outlet is not likely to be available. Thus, the electrical capabilities will be limited to those that can be provided by a portable generator. These can be truck-mounted and powered by gasoline motor. The finite-length stick electrodes of the shielded-metal arc process would be quite appropriate for this application because of the wide variety of materials, geometries, and applications encountered in field repair. Gas tungsten arc and gas metal arc are also possibilities. The size and geometry (fillet joint) would not be attractive for the electroslag, submerged arc, or thermit processes, and the equipment required for other alternatives would not be sufficiently portable.

2.- 4. This information can be found by surveying various texts and handbooks. Selection is really a matter of preference, with due consideration to material, the need to weld in both downward and upside-down fillet positions, and the probability of oil contamination and possibly even paint (this is a field repair on an installed item).

CHAPTER 39

Review Questions

1.Low-temperature production joining methods include: brazing, soldering, adhesive joining, and the use of mechanical fasteners.

2. The characteristic feature of brazing, and so important in its definition, is the use of a filler material with melting temperature above 450^{o} but below the melting temperature of the materials to be joined. Many processes use heat and filler metal, but brazing implies a certain use (capillary flow into the braze joint) and type of filler material.

3. Brazing employs a filler metal whose melting point is below that of the metals being joined. It differs from welding in that: (1) the composition of the brazing alloy is significantly different from the base metal, (2) the strength of the brazing metal is substantially lower than the base metal, (3) the base metal is not melted during joining, and (4) bonding requires capillary action.

4. Since neither of the base metals are melted during the brazing operation, and the bond is formed by introducing a lower melting temperature metal into the gap, the brazing process is attractive for the joining of dissimilar metals, such as ferrous to nonferrous or metals of widely different melting points.

5. Because brazing introduces a filler metal of different composition from the materials being joined, and the process can be used to join dissimilar metals, brazing can result in the formation of a two-component or three-component galvanic corrosion couple.

6. Braze joint clearance is the most important factor determining joint strength. Joint clearance determines if capillary action will be effective in filling the joint gap. Capillary action is the movement of a fluid into a small space driven by surface attraction force.

If the joint clearance is too small, the filler metal may be unable to flow into the gap and the flux material may be unable to escape. If the gap is too great, capillary action may be insufficient to draw the metal into the joint and hold it in place during solidification.

7. The clearances necessary for good flow and wetting of the joint are those that are present at the temperature of the brazing process. The effects of thermal expansion should be compensated when specifying the dimensions of the joint components.

8. The two most common types of brazed joints are butt joints and lap joints. Butt joints are attractive since they do not require additional joint thickness in the braze region. Lap joints are attractive since the relatively large area compared to butt joints results in high joint strength.

9. Some of the considerations when selecting a brazing alloy include: compatibility with the base materials, brazing temperature restrictions, restrictions due to service or

subsequent processing temperatures, the brazing process to be used, the joint design, anticipated service environment, the desired appearance, the desired mechanical properties, the desired physical properties, and the cost.

10. The most commonly used brazing metals are copper and copper alloys, silver and silver alloys, and aluminum alloys.

11. Silver solder is a brazing filler material.

12. In brazing, a flux is used to: (1) dissolve oxides that may have formed on the metal surfaces, (2) prevent the formation of new oxides during the heating, and (3) lower the surface tension of the molten brazing metal and promote its flow into the joint.

13. Clean surfaces are needed for brazing and while fluxes can remove some surface oxides they are not designed to be exclusively cleaners. To provide a “clean enough” surface so the flux can act as a fluxing agent and secondarily as a cleaner, precleaning by chemical and/or mechanical means is necessary.

14. Brazing is done to provide a joint between materials and one of the functions of the joint is to provide proper geometric relationships between the components of the entire structure. If the geometric relationships are important, positioning of the pieces to be joined before and during brazing can be maintained using jigs and fixtures. Brazing jigs and fixtures are especially important for complex structures since without proper support movements in the joints can produce large errors in final structure configuration.

15. The primary attraction of furnace brazing is that a number of parts/products can be processed simultaneously and so production rates can be high.

16. In furnace brazing, reducing atmospheres or a vacuum are frequently used to prevent the formation of surface oxide and possibly reduce any existing oxides and eliminate the need for a brazing flux. If reactive metals must be brazed, a vacuum may be required.

17. In dip brazing, the entire assemblies are immersed in a bath of molten brazing metal. The braze metal will usually coat the entire workpiece, so such a process is wasteful for all but very small assemblies.

18. Some of the attractive features of induction brazing are: (1) heating is very rapid, (2) the operation can be made semiautomatic (requiring only semi-skilled labor), (3) the heating can be confined to a localized area (reducing scale, discoloration, and distortion), (4) uniform results are readily obtainable, and (5) by changing coils, a wide variety of work can be performed with a single power supply.

19. Since most brazing fluxes are corrosive, the residue should be removed from the work immediately after brazing is completed.

20. Braze welding differs from straight brazing in that capillary action is not used to

distribute the filler metal. Low melting temperature filler metal is simply deposited into a joint by gravity.

21. The distinction between soldering and brazing is one of temperature, soldering being a brazing-type operation where the filler metal has a melting point below 840^0F (450^0C).

22. Solder joints are not strong because low melting temperature, weak materials are used for solders, low soldering temperatures are used and the bonding of the solder to the pieces to be joined is primarily mechanical. There is no strong metallurgical bonding developed as in the case of welding where the work material and filler material are melted and recombine.

23. The most common soldering alloys are composed of lead and tin.

24. Health and environmental concerns about lead are driving the search for and development of leadfree solders.

25. A successful conversion to leadfree solders means that the functions of the solder must be effectively and efficiently provided by the new solder material. Properties related to useful solder characteristics are melting temperature, wettability, electrical and thermal conductivity, thermal expansion coefficient, strength, ductility, creep resistance, thermal fatigue resistance, corrosion resistance, manufacturability and cost. Obtaining adequate solder characteristics and behavior involves a large number of factors and so a number of difficulties. Other difficulties in conversion to leadfree solders are the development of useful fluxes and the design of processes that will use the new solder.

26. Any of the heating methods used for brazing can be used for soldering, but most soldering is still done with electric soldering irons or small torches. For the low-melting-point solders, infrared heaters can be used.

Problems:

1. a. The corroding member of the corrosion cell is the component that gives up electrons (oxidation) – the anode. The driving force for the electrochemical reaction is the voltage that develops between the anode and the cathode at which the reduction reaction occurs. Standard electrochemical cells are used to measure the voltage between a sample material and a standard, platinum, electrode in a standard cell at standard conditions. The electromotive force series is developed from such tests. The metals that are lower on the electromotive series experience oxidation, corrosion, with respect to metals higher on the series. A similar, widely-used indication of corrosion susceptibility is the galvanic series which presents the relative reactivity (no electromotive voltages are provided) of materials in seawater. Again, the more cathodic materials are at the top of the series and more anodic materials toward the bottom of the series.

Electromotive force and galvanic series are available in many textbooks and handbooks (e.g., Corrosion Engineering, M. G. Fontana, McGraw-Hill, 1986) and show that for
i. low-carbon steel – copper-based brazing alloy the anode will be steel
ii. copper wire – steel sheet – lead-tin solder the anode will be steel
iii. tungsten carbide - carbon-steel the anode will be steel since most brazing materials are lead and tin alloys.

2. The tin-antimony and tin-copper solders are expected to be more cathodic than the lead-based solders since lead is below copper and tin (slightly) on the galvanic series.

3. The three general ways to change interactions between materials in a galvanic corrosion situation are to change materials, to change the surrounding environment and to change the galvanic cell by introducing another material(s). The material changes possible are changing the materials that are joined and/or the braze material. The function of the joint will determine if this is feasible. Changing the environment is problematic since this will probably entail significant, qualitative changes in the system in which the brazed joint must function. Inserting a sacrificial body (anodic with respect to all other materials in the joint) into the system may be a possibility.

Case Study: no case study

CHAPTER 40

Review Questions

1. The ideal adhesive bonds to any material, needs no surface preparation, cures rapidly, and maintains a high bond strength under all operating conditions.

2. Structural adhesives are bonding materials that can be stressed to a high percentage of their maximum load for extended periods of time without failure.

3. Some newer applications of adhesive bonding are medical and dental applications (e.g., cosmetic dentistry), bonding composite materials (laminates) and joining major components of automobiles (body panels).

4. Some types of industrial adhesives are epoxies, cyanoacrylates, anaerobics, acrylics, urethanes, silicones, phenolics, polyamides and thermoplastics.

5. Curing of the structural adhesives can be performed by the use of heat, radiation or light (photoinitiation), moisture, activators, catalysts, multiple-component reactions, or combinations thereof .

6. Typical epoxies have use temperatures of –50o C to 250o C (-60^{o} F - 500^{o} F), shear strength of 10 MPa to 70 MPa (1500 psi – 10,000 psi) with strength dependent on temperature and curing time of minutes to days.

7. Trace amounts of moisture on the surfaces promote the curing of cyanoacrylates. The anaerobic adhesives remain liquid when exposed to air. However, when confined to small spaces and shut off from oxygen, as in a joint to be bonded, the polymer becomes unstable. In the presence of iron or copper, it polymerizes into a bonding-type resin.

8. The silicone adhesives form low-strength joints, but can withstand considerable expansion or contraction. Flexibility and sealing ability are other attractive properties. Numerous materials can be bonded, and the bonds resist moisture, hot water, oxidation, and weathering, and retain their flexibility at low temperatures.

9. Nonstructural adhesives include
- evaporative adhesives that are usually organic or water base solvents containing vinyls, acrylics, phenolics, polyurethanes and various kinds of rubber,
- pressure-sensitive adhesives that use rubber compounds as the adhesive media,
- delayed-tack adhesives that usually use rubber based adhesive that require heat activation,
- conductive adhesives that are adhesive binder containing conductive particles,
- radiation curing adhesives such as photocuring polymers used in rapid prototyping and dental applications.

10. Conductive adhesives can be produced by incorporating selected fillers, such as

silver, copper or aluminum flakes or powder. Certain ceramic oxides can provide thermal conductivity.

11. Temperature considerations relating to the selection of adhesives relate to both the temperature required for the cure and the temperatures likely to be encountered in service. Consideration should be given to the highest temperature, lowest temperature, rates of temperature change, frequency of change, duration of exposure to extremes, the properties required at the various conditions, and the differential expansions or contractions.

12. Environmental conditions that might reduce the performance or lifetime of a structural adhesive include: exposure to solvents, water, or humidity, fuels or oils, light, ultraviolet radiation, acid solutions, or general weathering.

13. The stress state in a bonded joint can be tension, shear, cleavage, or peel, as shown in Figure 38-1. Since most adhesives are much weaker in peel and cleavage, joints should be either shear or tension. Looking further, the shear strengths are greater than the tensile strengths, so the best adhesive joint would be one in which the stress state is pure shear.

14. The strength of an adhesive joint depends on the strength of the bond between workpieces and adhesive and the area of adhesion. Butt joints are undesirable since the contact area is small giving relatively low strength joints compared to other joint configurations.

15. Surface preparation procedures vary widely, but frequently employ some form of cleaning to remove contaminants and grease. Chemical etching, steam cleaning, or abrasive techniques may be used to further enhance wetting and bonding.

16. Almost all materials or combinations of materials can be joined by adhesive bonding. The low curing temperatures permit heat sensitive materials and thin or delicate materials to be joined. The resulting bond can tolerate the thermal stresses of differential expansion or contraction.

17. The primary property of structural adhesives is strength. Other attractive properties of various adhesives are

- low curing temperature and so the ability to join temperature sensitive materials and no production of a heat affected zone,
- mechanical flexibility and so the capability to adapt to differential expansion and contraction between the joined components,
- flow during application and mechanical flexibility and so the possibility of reducing susceptibility to fatigue which usually is initiated at sharp surface irregularities,
- low thermal and electrical conductivity and so the ability to be used as insulators,
- high damping compared to solid interfaces and so good shock, noise and vibration insulation,
- low corrosion susceptibility,
- flow during joint formation and so the ability to be used as a sealant,

- potentially low cost.

Some desirable characteristics of the adhesive joint are

- high strength if large areas are joined,
- large adhesion areas and so the ability to distribute load,
- small or no stress raisers.

18. From a manufacturing viewpoint, joint formation does not require the flow of material, as with brazing and soldering, but the adhesive is applied directly to the surfaces. The adhesives can be applied quickly, and useful strengths are achieved in a short period of time. Surface preparation may be reduced, since bonding can often occur with a oxide film on the surface. Rough surfaces are an asset; tolerances are less critical; and no prior holes have to be made. In addition, the process lends itself to robotics and automation.

19. Most industrial adhesives are not stable at temperatures above ~50^0F. Oxidation reactions are accelerated, thermoplastics soften and melt, and thermosets decompose.

Since most adhesives are not stable above 350^0F, the structural adhesives would not be attractive for applications that involve exposure to elevated temperatures. At low temperatures, some of the adhesives become brittle.

20. Adhesives bond the entire joint area. Force equals strength times area. By providing large contact areas, the relatively low strength structural adhesives can be used to produce joints with load-bearing abilities comparable to most alternative methods of joining or attachment.

21. Selection of a specific fastener or fastening method depends primarily upon the materials to be joined, the function of the joint, strength and reliability requirements, weight limitations, dimensions of the components, and environmental considerations. Other considerations include cost, installation equipment and accessibility, appearance, and the need or desirability for disassembly.

22. If there is a need to disassemble and reassemble a product, threaded fasteners or other styles that can be removed quickly and easily should be specified.

23. Integral fasteners are regions of components that are specifically formed to be used as parts of fasteners. An example is the formed parts of the top and tabs on aluminum beverage containers. The top and tab have formed regions that are produced as the top and tab are being manufactured. These regions are aligned and further deformed when the top and tab are joined.

24. A press fit differs from a shrink or expansion fit in that mechanical force produces the assembly, not differential temperatures and thermal expansions and contractions. Both involve a strong interference fit to produce a high-strength mechanical joint.

25. The most common causes for the failure of mechanically fastened joints relate to joint preparation and fastener installation. Hole manufacture and alignment, installation with too much or too little preload, misalignment of surfaces, insufficient area under load-

bearing heads, and vibrations that can lead to further loosening of the joint (and fastener fatigue) are all areas of concern.

26. The use of standard fasteners would enable ready access at reasonably attractive cost. Nonstandard fasteners require scheduled production, possible delays and additional expense. By minimizing the variety of fasteners within a given product, there is a reduced likelihood of mix-up or exchange of pieces during a disassembly and reassembly, or even within the initial production and assembly line. Moreover, inventory costs could be reduced, and by using larger quantities of a given fastener, a reduced price might be available.

Problems:

1. An interesting opportunity is available if elevated temperature can be used to bake coatings and also influence material characteristics such as mechanical properties of the material to be coated. Data is provided at *ussautomotive.com/auto/tech/grades/dual_ten.htm* that shows typical paint-bake temperature of 177^o C (350^o F) and that there is a change in yield strength due to bake-hardening.

In addition to bake temperature the bake time has to be considered since adhesive curing time, as well as temperature, is a concern.

Given the adhesive cure temperatures in Table 40-1, and the belief that using too high a temperature will degrade the adhesive and produce unacceptable joints, the possible adhesives are epoxies, phenolics and urethanes.

The primary pro of such an integration of paint baking and adhesive curing is the elimination of individual operations with separate tooling, facilities and personnel and replacement with a combined, simpler operation. The major con is that with the loss of an individual process the relatively tight control, operation and optimization available for the process is compromised as the integrated process is designed operated and optimized to accomplish two or more operations.

2. When iron (steel) is galvanically coupled with passive aluminum, iron becomes the anode and undergoes preferential corrosion. (Aluminum is below steel in the galvanic series - see Problem 1, Chapter 39) With moisture being the electrolyte that completes the electrical circuit, we have a corrosion cell with very small corroding anodes (the heads of the iron nails) and large cathodic surfaces (the aluminum siding). The heads of the nails will rapidly corrode and the siding will eventually separate from the house. Aluminum siding should be installed with aluminum nails.

3. Hole preparation would be a major area of concern, because we must now produce holes in a fiber-reinforced material. Mechanical means will tend to produce frayed surfaces. Thermal means may damage the fibers and matrix.

Joint design is also a concern. While the composite material may offer attractive strength properties, these properties may not be present around a fastener where the continuity of the fibers has been disrupted. Screws and similar threaded fasteners will be limited by the strength of the polymeric matrix. Compression fasteners, such as bolts and rivets, may require the use of large washers to spread the load over a larger area. A variety of service-type failures could be considered.

Case Study: Golf Club Heads with Insert

1. Since the club head is a martensitic stainless steel, it achieves its strength by a quench and temper heat treatment. Subsequent exposure to temperatures in excess of the tempering temperature will result in a further loss of strength and hardness. In addition, exposure to temperatures near 1000OP will enable the atomically-dispersed carbon and chromium atoms to diffuse and unite to form chromium carbides. The depletion of chromium will leave the adjacent regions with less than 12% chromium free to react with oxygen to form the protective (corrosion-resistant) oxide. The stainless steel is no longer "stainless" and will be subject to red rust. For these reasons, coupled with possible warping of the thin insert, the joining method is limited to low temperature methods. While brazing or, more preferably, soldering might be possibilities, these methods provide metallic joint, and the electrical conductivity coupled with the presence of two or more dissimilar metals creates a galvanic corrosion cell in a product that may be exposed to humidity and moisture as they are stored in car trunks and other locations. Rivets, screws and other fasteners are possible, but the joining becomes localized, and the possibility of gaps and related dampening is a real one. Among the low-temperature methods, it appears that some form of adhesive bonding would be the most preferred means of assembling the components.

2. The same problems with the martensitic stainless steel restrict the temperature of the joint. Most of the above methods continue as options, with brazing or soldering being eliminated because of the polymeric shaft, and shrink or press fits becoming additional alternatives. If the shaft were metallic, brazing or soldering reenter the picture. If the shaft is sufficiently solid, some form of hole and rivet is a possibility.

3. If the same procedure is to be applied to both joints, one between dissimilar metals, and the other between stainless steel and fiber-reinforced epoxy, then some form of adhesive would appear to be preferred. NOTE: It may also be desirable to consider alternative means of creating the composite club face, such as flame-spray deposition of the carbide-containing surface -- which would eliminate the need to bond two dissimilar metals.

4. The general process being proposed is the removal of material from around the carbide particles. The alternative is to add carbide particles to the club face. Particle deposition processes are limited to those that will form a strong bond at the carbide particle-substrate interface and not have adverse effects on the substrate to which the particles are applied.

Adhesives will not be useful since they will not supply strong adhesive forces over the small particle-surface contact areas. Spraying processes such as plasma spraying will not be useful since they will affect club face properties and performance.

Starting with the proposition that using an insert does not affect club performance, it is probably less expensive to produce inserts and add them to the club face, rather than trying to produce a one-piece club head with a specially prepared face. Inserts can be produced in batches. Inserts can be finished by specially designed processes without concern about affecting the rest of the club head, e.g., edge smoothing by sanding without concern about the sanding process extending to the parts of the club face surrounding the inserts.

If there are performance advantages to a single piece club head, and there may very well be effects of the insert-club head interface on performance, then entire club heads should be produced and the hard particles added to only the club face. In addition to selecting the process, process control concerns arise. The particle deposition process must not extend to regions beyond the club face area of interest. This approach probably will be more expensive than producing separate inserts and bonding them to club faces.

The low process temperature, high bond strength requirements lead to consideration of what are fairly exotic processes for mass produced consumer goods, but are much less unrealistic for high end golf clubs that are semi-custom products. Possible processes are,
- electroless composite plating and variations of such processes, Chapter 31,
- laser sintering, Chapter 33,
- low temperature furnace brazing ,Chapter 39

Club heads can be produced in batch mode in plating and brazing processes so unit cost can be low.

The performance of the raised parts/particles themselves is an issue. If these regions wear or are removed, the benefits of them being on the face are lost. Inspection of used clubs with abrasive particles in the face will show a worn region. The carbides are not expected to wear. But they will be removed from the club face either by fracture of the hard, brittle carbide or by separation at the carbide-metal interface. Again the strength of the particle-face bond is critical.

CHAPTER 41

Review Questions

1. The production system includes design engineering, manufacturing engineering, sales, advertising, production, inventory control and the manufacturing system.

2. a. The route sheet is a document which describes the route or path that the parts must take in the production job shop. Each machine is indicated on the route sheet and the parts are transported from machine to machine in tote boxes or carts.
b. The function of the route sheet is to specify the sequence of operations and processes needed to convert the part from raw material into a finished product.
c. Cooking recipes contain route sheets. They are also partly a bill of materials and an operation sheet.
d. The route sheet is also called a traveler since it moves with the parts.

3. Examples of a process flow chart and a bill of materials are given in Figure 41-18. This type of process flow chart outlines the sequence of manufacturing steps to produce the final product in terms of components of the product and their order of use. This description is in contrast to specifying the processes and machines used to produce, manipulate and assemble the components.

The bill of materials lists the materials and components needed to produce one unit of final product. The process flow chart is related to the bill of materials in that it shows where (time and location) in the process the items in the bill of materials are used. This indicates when the items will be needed and determines not only the items to be obtained but also when they are needed enabling rational procurement and production planning.

4. An operations sheet gives more specifics with regard to the processes needed to make the part while the route sheet, a production control device for the job shop, provides information about where the part is to go next for more operations. In the visual factory, operations sheets are posted right at the machine for all to see.

5. The master production schedule is a document that specifies the products to be produced, the quantity to be produced and the delivery date.

6. MRP can mean material requirements planning and is a tool for calculating the quantities of items and/or amounts of material needed for use in each stage in the production process and when they will be needed. Manufacturing resource planning MRP encompasses the same general idea but expands it to include consideration of all resources, not just materials. For example, it is used to specify materials, labor, machines, etc. that are needed and the time and location of the requirements.

The master production schedule specifies products and their time of production and so sets the outcomes, or dependent variables or dependent demands, that are in the production system. Material requirement or resource planning specifies the materials and other resources and when they must be available to meet the dependent demands specified in the master production schedule.

7. The economic order quantity usually refers to materials and components, not to such manufacturing resources as labor, and so is used in material requirements planning. In material requirements planning the amount of material and time it is needed is set. This is an overall system or global set of requirements. The economic order quantity calculation provides a way to decide on the best way to obtain the materials within the larger MRP framework. Materials must be available to the production system when they are needed. However, the cost of the materials depends many factors and the economic order quantity specifies the best way to order the materials that have to be in the system at specified times.

8. The functional objectives of production control are to produce the timing and coordination to ensure that product delivery meets customer demands.

9. The function of inventory control is to ensure that enough products of each type are available to satisfy customer demand. This concept can be applied at any level of the enterprise by changing the definition of the customer. For example, a single machine station can be a customer relying on inventory control to assure that the workpieces supplied to it from the previous step in the process are available when needed.

10. Production control refers to controlling the movement of the materials to the right machines at the right times. Production control deals with when to make the products (scheduling) on which machines in what quantities. Inventory control deals with having the right amounts of materials in the system available at the right places at the right times.

11. The design determines which manufacturing alternatives will be available to make the part. The design along with the needed volume and the material selected for the part all influence the choice of the manufacturing processes. For example standardizing the design of the thread type and hole size greatly simplifies the design of manufacturing cells. Suppose the design calls for 16 RMS finish. The manufacturing system will probably need a grinding operation to meet this design specification. The manufacturing cell design would have to include grinding capability. Design also influences the production system in many ways. Designing things that customers want to buy, that can be readily inspected for quality, that are reliable, and that are safe for the customer to use are all design aspects that impact the production system. Because design occurs before all the other functions described in the manufacturing and production systems, it obviously is the driving force.

12. This statement means that a large expensive piece of software adds a large fixed cost to the total cost of making something in the same way a large expensive piece of hardware adds a large fixed cost to the total. Both costs will require a large volume of parts to be made to cover the cost. The problem is that while hardware (equipment) can be depreciated and some of its cost recaptured through tax savings, software costs are not depreciated and are generally hidden in the overhead costs of the company .

13. The part described in Figure 41-20 is a simple turned part and for a quantity of 25 is produced on an engine lathe, a general purpose machine. As production quantity increases the use of more special purpose machines can be justified based on unit cost to produce the parts. The more specialized machines for this type of turned and threaded part are, in increasing order of specialization, turret lathes, screw machines and turning followed by thread rolling machines. It is doubtful that any advance past use of a turret lathe would be warranted, and perhaps not even use of a turret lathe if one was not already available.

This same kind of question is considered in more detail in Problem 8, Chapter 32.

14. A route sheet lists the processes that are required to produce a part, the sequence of processes and the machines and tooling to be used. An operations sheet lists the sequence of operations to be performed on a single machine, at a single work station or on a given workpiece in a specified group of machines. The operation sheet provides the details needed to carry out the individual processes specified on the route sheet.

15. Ergonomics deals with the mental, physical and social requirements of work and how the work is designed or modified to accommodate human limitations, Section 43.7. The Ergonomics Society (*www.ergonomics.org.uk*) says that, Ergonomics is the application of scientific information concerning humans to the design of objects, systems and environment for human use.

16. The mrp generates orders for the shop, which generates the orders for purchased parts (from the vendors) and the orders for subassembly and component manufacturing. The MPS uses the information in the BOM as one of its inputs. The BOM lists all the parts that are in the product. The MPS uses the information regarding the capacity of the systems compared to the orders for the components and products to generate a master schedule.

17. Computer integrated manufacturing is the use of computers to run machines and to store all the information needed to manufacture a product and to manipulate all the data and information in any activity related to the manufacture of the product. Manufacturing of the product is defined in the very broadest sense, all the way from market study and conceptual design to disposal or recycling.

18. A manufacturing system is a sequence of processes and people that actually produce the desired product(s), Section 41.3.

Manufacturing system characteristic	Comparison in university
processes	lectures laboratory activities research outreach
sequence	progression form lower level to upper level courses
people	faculty staff students
products	education new knowledge service to various communities

Internal customers for faculty are students, internal customers for staff are faculty and students.

Products are educated people, new knowledge and service to communities such as theater and sporting event audiences and professional societies.

19. In a project shop the critical path is the longest path in terms of time through the sequence of steps that are needed to produce a product. The paths show activities needed to produce the product and are formulated on diagrams that show the manufacturing steps, their sequence, interrelationships and the time needed for each.

20. For example, the work boot of a foundry worker has steel toes and a strong arch to protect his toes from heavy objects being dropped on them and provide good support on the hard concrete floors of the foundry. One doesn't wear sandals in the foundry as these are designed for entirely different purposes.

21. The overhead costs include all those costs necessary to run the factory but which are not tied directly to the product. The cost of the foreman or the forklift truck drivers, power, light, heat, indirect materials, and so forth are all totaled into the overhead cost.

22. Manufacturing systems are systems composed of subsystems that interact with each other and with the entire system. Manufacturing systems have inputs such as materials, energy, customer demands social pressure and capital. The system contains people, material being worked, machines, equipment, supplies, information and data systems. Areas of control in the system are production rate, product mix, inventory, quality and machines. The system outputs are goods, services, information and unusable material and data.

Stability usually means a system response that is small compared to the input causing it and that the response to the disturbance decreases rapidly over time. System stability is usually increased in two ways. One is to include feedback into the system controller and operate the system so as to drive the difference between desired behavior and the measured actual behavior to zero. In terms of manufacturing systems this implies producing feedback from the overall system output of product characteristics and quantity, etc. and also from subsystem components such as production and inventory control system and establishing a control system that acts on these feedback signals.

The second way that system stability is increased is at the system design level. It is to design and implement system components and systems that are relatively insensitive to disturbances and/or to operate systems away from operating points that are sensitive to disturbances. The general concept is to design and use subsystems that have a flat response to changes in operating conditions. For example, in terms of cost, inventory systems that have holding cost per unit that does not change appreciably with held quantity are more stable than inventory systems with large dependence of unit holding cost on in-stock quantity. The lower, more constant holding cost system is more stable in the sense of decreasing the importance of uncertainty in economic order quantity considerations for example.

There is also the possibility of decreasing variability of inputs to the system. This is a way to influence system behavior but is not a way to make the system inherently more stable

23. Since there are critical paths in all systems that include preference relations, there is a critical path through the academic job shop.

24.

	Quality	Cost	Delivery	Flexibility
Job shop	high based of worker skill	high product cost due to high throughput time, large inventories, general purpose machines	long due to production of many different kinds of small batch parts and so long many, long changeovers	high due to functional design
Flow shop	high if system stable	high plant cost due to use of specialized machines and equipment	short due to use of specialized equipment and dedication to few products	low due to specialized production and materials handling equipment
Lean shop	high due to local control at cell level	low plant cost due to low inventory		high since cells can be reconfigured and worker flexibility

25. A high-volume transfer line for machining is characterized primarily by a lack of flexibility. The product mix is extremely small and so little flexibility is needed in the individual processes or in the material handling equipment between the processes.

Given the true function of a transfer line as the production of very similar parts at high rate there does not appear to be a reason for considering lean manufacturing concepts that are intended to capitalize on flexibility

However, there are some reasons to expect the need for flexibility to be important in high volume products. Product life in terms of changing product characteristics, not product failure, is becoming shorter. Flexibility in changing large production systems is needed. Product semi-customization is becoming a customer demand calling for production system flexibility. The possibilities for incorporating lean manufacturing concepts into high volume production situations are expanding.

There are some counter-trends. For example, building several car models on one platform is a move toward reducing product variations and so less flexible manufacturing systems are required. The number of models may increase but certain aspects of them become less variable.

26. Mass production plants have been evolving into lean plants designed for flexibility through the

- development of manufacturing and assembly cells linked to each other and to final assembly by specific material control systems,
- production of functionally integrated systems for inventory and production control,
- grouping of cells according to the sequence of operations needed to produce the part.

The intent is to convert the linear, fixed arrangement of flow lines into easily reconfigurable cells with short cell and machine setup times.

27. One way to quantify manufacturing system performance is in terms of profits generated. For a particular product the profit can be calculated from

profit per part = selling price – unit cost

and if this is put in terms to include the production rate and sales rates

profit = (selling price)(number sold) – (unit cost)(number produced).

This indicates that to increase profit efforts should be made to

- increase the selling price, perhaps by controlling production or providing customization,
- increase the number of units sold, perhaps by appealing to, or creating, new markets,
- decreasing the unit cost, as in the best use of mass production, flow lines,
- bring the number of units produced into line with the number sold requiring accurate forecasting of demand.

28. The Ford system was the refinement of the mass production system. The system relied on division of labor, moving assembly lines, real-time stock control and reliance on assembly cycle time predictability and control. A large part of the usefulness and efficiency of such a system is similarity of parts, bordering on complete interchangeability.

The essential feature of the Toyota Production System is a linked-cell manufacturing system with the linking generated by material control systems. With respect to the Ford or mass production system the similarity is that the control of material flow drives the system. The difference is in the way material flow is controlled. Another similarity is the importance of part quality in making the systems successful. Implicit in the mass production, interchangeable part system is the reliance on truly interchangeable parts. In the initial fit and function sense, if not in life cycle performance, this can be viewed as high quality. And this high quality made it possible to assemble a large number of cars in a short time. Quality is also a mark of the Toyota system, but is produced in a different way, based on in-process control, rather than being assumed for the input to work stations on the mass production line.

29. If the unit cost of each operation needed to produce a product is minimized the impact
a. on machine design is minimal whether the machine is considered to be the product or the production machine,
b. on workers' is minimal, unless there is profit-sharing,
c. on the factory as a manufacturing system is probably improved performance since total system production cost may be reduced since it is reasonable to assume that the plant has been run by competent people. However, in the true system wide view this may not be so clear or always the case. The system cost is much more than the sum of the process unit costs. There are costs associated with the factory and parts of it that are not directly related to individual processes. For example, the complexity of the system has a cost and so machines grouped in different ways with produce different costs for the system, even if the unit costs of all individual operations remain the same.

30. The Ford system was the refinement of the mass production system. The system relied on division of labor, moving assembly lines, real-time stock control and reliance on assembly cycle time predictability and control. A large part of the usefulness and efficiency of such a system is similarity of parts, bordering on complete interchangeability. Part interchangeability is a hallmark of the first industrial revolution and the Ford system built on it.

Problems: no problems

Case Study: Fire Extinguisher Pressure Gage

1. A number of questions come to mind. How many failures have been recorded? Are they all from the same batch or production run? How long have the failed components been in service? Under what conditions of temperature, humidity, corrosive environment, etc.? Have they been serviced or recharged? If so has the maintenance been performed properly? what gases or chemicals might be present in the interior of the tube? Are these potentially dangerous or might they react with the tubing? what is the normal internal pressure? Could the chemicals present in the extinguisher have played a role? How was the tube manufactured? Was the starting tubing seamless or seamed tubing? How much cold work was imparted to the tubing? Was a stress relief or anneal incorporated after forming? what was the likely ductility of the tubes when put into service? Were the tubes inspected? If so, how? In the failed components, is the failure by a single crack or multiple cracks? Do the cracks have a branching appearance? Do they follow the flow lines of deformation? Are they intergranular or transgranular? Are any corrosion products observable? Is there evidence of any plastic deformation, such as would be present if the

tubing had burst? Could mishandling have caused the damage?

2. The tubing could have been defective as it came from the original supplier. If the tubing was seamed tubing, this could be the location of a poor bond. Massive inclusions, seams, laps, and other metallurgical defects could produce failures of this sort. If this were the case, there should be some correlation to tubing supplier, date of manufacture or batch, etc. Also, metallographic examination should reveal features that confirm the presence of metallurgical defects in the tubing. In this case, the cracks should have formed as the bourdon tube was being manufactured. Defects of this type should have been detected by the manufacturer.

An overpressurization could have occurred, causing the tubing to burst. In this case, plastic deformation should be observable and the fractured regions should be flared toward the outside of the tubing. A single burst should be present, and the fracture would most likely be transgranular.

Copper-base alloys are also susceptible to stress-corrosion cracking, especially when present in moist or humid environments. If this were the case, metallography would reveal the crack to be brittle in appearance, following grain boundaries in the direction of prior working, and be a branching crack (most likely, multiple cracks should be present). The absence of a prior anneal or stress relief would be noted. Standard tests could be conducted to determine the susceptibility of the particular material to stress-corrosion cracking.

Mechanical abuse might also be considered, but for an expectedly ductile material, there should be signs of plastic deformation that would have preceded final fracture.

3. Of the mechanisms proposed above, only stress-corrosion cracking would account for a satisfactory product being made at the manufacturer and the defect forming at a later time when the product is in service. Cracking due to defective tubing should have occurred during the process of forming the bourdon tube. Overpressurization would likely have occurred during either the initial manufacture (failure should have been noted), or during recharging (a correlation of failures and service record should be noted) . Mechanical abuse should come with accompanying signs of prior deformation.

4. Assuming that the failure mechanism is indeed stress-corrosion cracking, possible alternatives would be to subject all formed bourdon tubes to a stress-relief or anneal heat treatment. Elimination of the corrosive environment would be extremely difficult, so the problem should be addressed through the stress approach. Another alternative would be to change the material in the bourdon tube to a metal or alloy with reduced susceptibility to this particular mode of failure.

CHAPTER 42
System and Cell Design

Review Questions

1. An enterprise or production system is a system that supports the value-adding work of the manufacturing system, see Question 2.

2. A manufacturing system is a system that converts a product of material from one state to another with higher value. Manufacturing systems consist of people, machines, equipment, facilities, etc.

3. Manufacturing system design is using system design principles (logic) and system implementation processes (definite actions or steps) to create a manufacturing system.

At a very general level, part design can be viewed as using principles to specify materials and their distribution in space to fulfill a function. Analogously, manufacturing system design is the use of principles to specify manufacturing system content, configuration and operation and the steps needed to implement it.

4. The enterprise system supports the manufacturing system, even though the manufacturing system exists within the enterprise, see Question 1. The enterprise system provides support to make possible the value-adding activity in manufacturing.

5. The six functional requirements of a stable manufacturing system are,
i. Right quantity
ii. Right mix
iii. Right quality
iv. Robust
v. Rapid problem solving
vi. Safe, Ergonomically sound

a. Standardized work (Question 9) is the definition of work methods to be used to operate the manufacturing system. It specifies what to do, how to do it and why it is being done. With clear definitions of what is expected, abnormal situations are easily identified as those not fitting with the specific, definite expectations.

b. In order for a system to be robust it must contain components that are
- inherently insensitive to disturbances, to the extent possible,
- system elements specifically designed to deal with, and minimize the effects of disturbances, such as process, subsystem and total system control systems.

c. For stable systems cost is reduced by
- focusing on what the system is to achieve, not simply on the end results of the system,
- realizing that the operation’s cost is not simply the sum unit cost for each operation,
- considering the effects of flow complexity on cost.

6. A value stream map depicts the processes and activities in material and information flows in the system.

McDonalds is typical, and prototypical, of many fast food restaurants.

Functional Requirement	Function Requirement Achieved?
Right quantity	At the store, products are produced individually at time of order and so, yes the right quantity is produced. However, products are available from store inventory and so the question of inventory level arises. From observation of one store there is no way to judge enterprise quantity management.
Right mix	As above, that is there is no easy way to judge store and enterprise inventory mix.
Right quality	Yes, success of the business attests to this – the acceptable quality is based on definite expectations held by the customers.
Robust	No – disturbances in the form of large rushes of customers are seen to have large effects on line length – probably due to size of staff.
Rapid problem solving	Yes, returned items are quickly replaced with quick disposal of returned items.
Safe, Ergonomically sound	Yes, most obviously in heights of work areas and drive through service window.

7.

Functional Requirement	Function Requirement Achieved?
Right quantity	Yes, given acceptance of curriculum planners expertise and seemingly similar quantity worldwide.
Right mix	Yes with specific and "broadening" courses in curriculum, given acceptance of curriculum planners expertise.
Right quality	Yes, the institution remains open – individual course quality depends greatly on instructor.
Robust	Yes, establishment of new programs, departments occurs slowly except in cases of truly new disciplines or large changes in demand.
Rapid problem solving	Yes, instructors and advisors available at least five days per week.
Safe, Ergonomically sound	Yes, most universities have security and environmental health and safety divisions.

8. System designs should be robust since perturbations or disturbances of the system are to be expected. The system should continue to function effectively in realistic situations and these include disturbances around the steady state.

9. Standardized work is the definition of work methods to be used to operate the manufacturing system. It specifies what to do, how to do it and why it is being done. Standardized work covers all aspects of system operation, e.g., how to handle problem situations as well as normal work.

10. Takt time is the length of time set to accomplish a task so that the task fits into a planned, controlled system. In part manufacturing takt time is the time set to produce a part and is

available daily production time / daily part demand

11. Given that the cell has to meet the necessary cycle time and the general rule that all individual processing times in a cell must be less than the cell cycle time, the part that the machine is producing has to be made in less time. The alternatives are to reduce the machine's processing time to below the cell cycle time or to decrease the part production time by adding processing capabilities, probably by the addition of another machine(s).

12. Single piece flow is necessary in a cell because it is the basis for production control in the cell. Single piece flow enables
- implementation of checking the output of each processing and assembly step before the part is moved to the next step and
- ability of workers to move through the cell doing different operations.

13. The machines in cells have to operate in such a way that the individual process time is less than the cell cycle time, single piece flow is possible and operators can run the cell, rather than individual machines. This means operators load, unload and inspect parts at several machines and so the individual machines must run automatically between loading and unloading. Machine design requirements include walkaway switches meaning the machine is started and it runs through its cycle and switches off, indicators that show the machine as running or not, machine fault indicators showing premature stopping and cycle completion indicators. The machine should have part checking capabilities and workpiece loading devices where warranted. Machines have to meet all health and safety requirements.

More general machine requirements are described in Section 43.5.

14. The key role of the worker in the cell is to control production by implementing single-piece flow.

15. a. The finishing process can be removed from the cell and included in the decoupler between the cell and the next cell, or perhaps included in the subsequent cell if there is another processing cell for the product. The decoupler would have to be designed to be capable of doing the finishing process in a processing time amenable with the rest of the manufacturing system.

b. Compared to the total cost of the cell and its operation $5000 seems very small and so calls for only a quick analysis of the machine based on added cost per part. Present cost per part is known and new cost per part can be estimated from the known machine cost and part production rate. The overarching cell design rule that individual process times have to be less than cell cycle time provides real impetus to new machine acquisition and may over ride some cost concerns.

c. With the increased cost a more detail cost analysis is required. A cost-benefit analysis should include consideration and quantification of the benefit of adhering to the all-process-times-less-than-cell-cycle-time rule.

16. Parts are pulled through a cell. That is, what drives part movement through the cell is the demand for a part from a process further down stream.

17. a. A mistake-proof device is one designed so that mistakes, or the production of defects in manufacturing, cannot occur. The device can be operated only in ways that make mistakes impossible without completely overriding certain aspects of the device. See Figure 43.12

b. Mistakes result in defective parts and/or machine malfunctions. Lost time and lost quality can be avoided is mistakes can be kept from happening.

18. The number of products per year should be estimated since even for short lived products there may be a large demand and so the need for large scale available

automation. That is, it may be necessary to achieve very high production rates in a very short time to take advantage of a new, large, expected short life product market. This will require the use of available automation, rather than the development of automation. Process automation development is unrealistic for the short time of one year.

A reasonable starting point for dicsussiion is the typical situation of one year life meaning relatively small demand and the availability of machines and equipment to set up a manufacturing cell to meet the demand.

a. There is probably no need or advisability for automation. Designing automation, specifying equipment, setting it up and testing and qualifying it in less than one year is a dubious undertaking.

b. In a machine cell the major, general functions are providing parts to the cell, moving parts between machines, loading parts on machines, unloading parts from machines, inspecting parts and moving parts out of the cell. Depending on the part value (precision, material, cost of failure in use, etc.) part inspection requirements and inspection equipment can vary widely. The other cell functions are easier to assess.

The simplest tasks to automate, and those with equipment that is most likely to be generally useful after the five year product life, are the candidates for automation. These are

- machine loading and unloading. Given the machines will probably remain after the five years the automated loading and unloading equipment will probably be general purpose, reconfigurable.
- inspection equipment. Again, this automated equipment may be useful after initial product life, especially it can be on-machine probing or inspection.

Material handling equipment usually involves larger, more complicated, more expensive equipment with little flexibility with respect to different products – it should not be automated. Movement of work into and out of the cell should not be automated since it probably interacts with other parts of the manufacturing system and those may not be concerned with the particular product of interest.

c. For reasonable, consistent annual demand over fifty years probably all the automation opportunities listed above should be implemented.

19. Fine furniture, boats and buildings have long product lives and are built in large annual quantities. They are made in variations of the general job shop, Section 41.4.

20. Single-cycle automatic machines are used in cells so that the worker(s) can load, unload and inspect parts at several machines. After one machine is loaded it has to run automatically so the worker can move to another machine to perform one of the required functions before returning to unload the machine.

Problems:

1.Takt time = available production time / daily demand
Takt time = { (480 min/shift)(2 shifts/day) } / { (160 + 120 + 200) products / day }
Takt time = 2 min

a. With 97% yield the number of products that have to be made to meet demand is (160 + 120 + 200) products / day / 0.97 = 495 products
and the cell cycle time is 960 min/day / 495 products/day = 1.94 min = 116 seconds

b. With no unload times and assuming one worker follows each part through the cell and waits for the processing of it to be completed at each machine the time is 283 seconds – this is essentially the time that the part spends in the cell.

Operation	Time Increment	Cumulative Time
Start		0
Load M1	3	3
Process at M1	42	45
Walk to 2	3	48
Process at 2	17	65
Walk to M2	3	68
Load M2	4	72
Process at M2	53	125
Walk to 4	3	128
Process at 4	4	132
Walk to M3	3	135
Load M3	4	139
Process at M3	18	157
Walk to M4	3	160
Load M4	6	166
Process at M4	50	216
Walk to M5	3	219
Load M5	9	228
Process at M5	47	275
Walk to 8	3	278
Process at 8	5	283

Once a flow of parts through the cell is established, i.e., steady state operation, then the worker can move parts and do the manual operations while the machines are running. The order of the worker's moves is not orchestrated by the table above. That is, the worker can move between various tasks while the machines are running. What is necessary is that parts on which to work be available

c. The takt time almost assuredly cannot be met. Consider the truly ideal situation of perfect synchronization. The sum of the times for the manual operations is (17 + 4 + 5) = 26 seconds and the machine load times are (3 + 4 + 4 + 6 + 9) = 26 seconds. There has to be at least one set of moves through the system so walking time is (7 walks)(3 sec/walk) = 21 seconds. The ideal worker time is then 73 seconds and this can only occur if parts are finished and available at just the right time at all machines. The large variation on processing times between the machines means this will not happen and the takt time will not be met.

d. A possible improvement is to decrease the processing times for the long processing time operations to approach the degree of synchronization necessary.

e. The implementation of the improvement should be based on a factory simulation. That is, with the available data and using different processing times the operation of the cell can be easily simulated, including expected variability in all the operations. The results used to justify committing to the improvement.

f. The cell design depends on the improvements proposed. What should be done is a quantitative description of the cycle time with the proposed cell design.

2. a. Yes this is a problem. An important, necessary aspect of cell design and operation is standardized work. With no provision for moving material into and out of the cell this aspect of the cell operation is not standardized work and so not part of the cell and so the cell will not function.

b. There are two parts to the solution to the problem. The first is to include running the input and output in the list of standard work for the cell. The second part of the solution is to have workers A and E operate the input and output stations. When there is insufficient input material a control signal has to be sent to preceding parts of the system to supply more material, this type of pull system is described in detail in Chapter 43. When cell output is sufficient finished parts has to be moved out. With the U-shaped ccell layout both workers A and E can be involved with both input and output stations since these stations are close together.

Case Study:

Snowmobile Accident

This case was fictionalized from an actual case in which one of the authors of the text was involved as an expert witness. In real cases of this sort, there will always be conflicting evidence and many explanations presented for the same set of evidence. Often, the truth may never be presented to the jury and the actual cause of the accident may never be known. Such was the situation here.

The tierod sleeve did actually fail prior to the accident. The cause: the tierod sleeve broke under impact when the right ski of the snowmobile hit a deep rut. At twenty below zero, low carbon steel has low impact strength and behaves as a brittle material. The original designer erred in his choice of materials for this application. The failure was not due to the reasons the lawyer stated, although in combination, such was certainly possible. Nor did the tierod break when the snowmobile hit the tree, although this was also possible. In cases like these, there are frequently no winners, except the lawyers.

CHAPTER 43

Implementation of Lean Manufacturing Systems and Cells

Review Questions

1. If the first step in moving away from a job shop design is to form single-piece flow cells the hidden variations in the job shop design will be exposed. The use of single-piece flow results in selection and study of only those processes, machines and layouts used in part production. Extraneous aspects of the job shop are not considered. Any variations in the processes and machines that were hidden by using the machines for making different kinds are parts at different times will be identified.

2. There are many steps in preparing the workforce for the conversion to a lean shop including
- explain why a change is desirable,
- education in lean production philosophy and concepts,
- involving the entire company,
- assure that system designers include all the workforce into system design,
- explain accounting and financial concepts that are different, or apply differently to the lean shop compared to the existing shop
- explain the measurable parameters that will be used to assess shop performance and how and why these might be different than those presently used,
- describe best in class operations and the performance measure values obtained by them.

3. Before cell formation, and during cell use, cycle time variation can be reduced by decreasing variations is materials, machines, product characteristics, product output rate and cost.

4. Two groups have the best ideas about how to improve work in cells. The people working in the cell have the most immediate knowledge of all aspects of cell operation and so can be expected to have the best ideas about very detailed parts of the work that can be improved. The other group is people who understand cell work principles and implementation of them to assure the cells are designed and operated properly.

On top of this foundation of individuals is general concept that all people can and should add to improvements of all kinds.

5. The manufacturing engineer should maintain the standardized work instructions. Changes in the standardized work instructions will involve several groups from cell designed to workers in the cell.

6. Integrated quality control includes setting specifications, producing measures over time and assuring that the workers involved in checking quality. Integrated preventive maintenance involves knowing maintenance schedules, maintaining records of maintenance actions and involving the machine user in carrying out some preventive

maintenance. The common elements are observing changes over time and involving the people most involved with the products and machines in the processes.

7. Leveling is the attempt to eliminate variations in final assembly. It involves mixed models, or mixed final products.
Balancing is making the output of the cells match the demands for parts downstream and needs of final assembly.

8. Sequencing in the placing of parts and subassemblies in the order necessary so that they arrive at assembly operations in the correct order and at the right time.
Synchronization is concerned with the time of manufacture of all items needed in the final product. It is the process of making sure production of subassemblies starts when needed.

9. A kanban pull system is the production process that uses a card system, standard container sizes and pull versus push production to accomplish just-in-time production. A kanban system is a visual control system for providing control over the routes that parts must take, the amount of material flowing between parts of the system and specifying when parts are needed at processing sites.

All the cells, processes, subassemblies and assemblies in a plant are connected by definite links in the manufacturing system design. The parts and materials move only over these definite links and only at specified times. The kanban system is run by use of part containers. Parts are used out of containers and when the cart is empty it is sent back up stream to be loaded with the parts needed. The arrival of an empty container up stream results in the production of parts. loading them in the container and sending them to the downstream stage based on the kanban card in the container.

With the movement of container to and from different parts of the plant a total oeratin pull system is established. The times for material, part, subassembly production and moves is determined. See also Question 17.

A kanban system is a control system for inventory. The maximum inventory is the number of of parts held in a container times the number of containers. The kanban system can be used to lower inventory levels by reducing the number of containers, observing the effects on system operation, curing any problems that occurred with the reduction in number of containers and operating the system with the new number of containers. The process can be repeated.

10. The advantages to users of building and customizing their own equipment is that then the user has a unique process technology and complete control over it. Others do not have the same proprietary capability. But it comes at the cost of research and development.

Using purchased equipment can lead to temporary advantage if the equipment is new. However this advantage is lost very quickly as markets are open. A strategy that can be used is to buy equipment and modify it in-house to provide better, perhaps unique, capabilities.

11. See also Question 2 Chapter 41. A manufacturing system is a system that converts a product or material from one state to another with higher value. The manufacturing

system is a complex arrangement of physical elements characterized by measurable parameters that is intended to add value in the production of a product. It consists of people and expertise, materials, machines, tooling, equipment, supplies, facilities and the systems needed to control the entire, system-wide process.

12. The functional requirements of the lean shop can be deduced from the implementation methodology of Table 43-1. They are
- material and part flow and part quality controlled by inherent manufacturing system design,
- integration of quality control into the manufacturing system,
- integration of inventory control into the system,
- integration of preventive maintenance into manufacturing,
- synchronization, leveling and balancing of manufacture,
- supplier integration into the system.

13. The objective of manned Linked-Cell Manufacturing System Design is to provide flexibility to the cell by including one or more people in the operation of the cell. This objective is maintained in two primary ways. One is to design the cell layout and workstations so that people in the cell can easily work the entire cell. The other is by providing for the possibility of adding additional people to the cell.

14. Internal elements or parts of the entire setup operation can be done only when the machine is not running, e.g., changing from a milling fixture that holds prismatic workpieces to one that hold cylindrical workpieces.

External elements of setup can be done while the machine is running, e.g., presetting milling cutter length for the next machine setup.

15. Some of the advantages of integrated quality control are that people immediately involved in making the part and involved in quality control, problems are identified as they occur not later, defective parts are immediately removed from the system and corrective action at the site of the problem might be immediately possible.

In a lean system quality control in implemented in the cell at the operation level as the part is produced. In other systems quality control and inspection are typically functions performed separately, far down stream from the operation or part production site.

16. In real physical processes there is a variability that is a part of the nature of the process and cannot be removed from it, it is inherent in the procecss.

17. Production control is the scheduling of the manufacturing system in terms of routing materials and parts, scheduling the use of materials and setting the quantities. Production control is accomplished in lean manufacturing by designing the system to inherently include a process that generates a call for parts or materials. An example, is the pull system built into the system by use of Kanban, see Question 9.

The production routing and part manufacture scheduling in the sequencing and synchronization part of the manufacturing system design and operation, see Question 8.

18. Build schedule stability is the existence of only little variation in scheduled production rates. The schedule of when and where to built parts is stable in that it is not subjected to large, rapid changes.

19. A pokayoke device is one that prevents an operators from making a wrong move or mistake. On a car pokayoke devices range widely over the problem they are intended to prevent, for example,
- with an automatic transmission the car cannot be started it it is in gear,
- anti-lock brake system are intended to prevent the incorrect application of brake pedal force,
- a true can't do it wrong device is the two edged key.

20. The cycle time is the time to produce a part, the single-piece flow cell is defined this way. And, the rule is that processing time for all the processes in a cell has to be less than the cell cycle time. So, the drying process in the cell can be at most 60 seconds. However, drying time can be increased by treating the drying oven as a process that is truly decoupled from the cell and then the cycle time does not set a limit on the drying time.

Problems:

1.Single-minute exchange of die is analogous to tire changing if the change of a setup in a manufacturing process is viewed as having elements or processes that are similar to changing a tire.
The major work elements in changing a tire are
obtain jack and spare tire -> move to flat/worn tire -> remove wheel cover -> loosen lug nuts -> place jack -> raise jack/car -> remove lug nuts -> remove wheel/tire -> place new wheel/tire -> tighten lug nuts -> lower jack/car -> tighten lug nuts -> replace wheel cover -> stow replaced wheel/tire.

The definition of external elements of setup change is those that can be done while the machine is running. None of the tire change process elements are external elements.

In a NASCAR race tire change the tire change time for one tire has been reduced by (there are no wheel covers for reasons other than reducing tire change time)
- having new wheels/tires readily available (not in the car and close to the pit wall)
- involving two people in the operation,
- using specially designed wheels (fixtures),
- using power tools,
- using a fast acting, long stroke, single action jack,
- providing incentives fro fast tire changes.

2. The seven tools of quality control are
Flow diagram
Histogram
Pareto chart

Scatter diagram
Fishbone diagram
Run chart
Control charts

The presentation can include the general intents of quality control, which of the general intents is addressed in use of the tool, the concepts underlying the tool, how the tool is used and what it shows. Three minutes is a very short time so probably these issues would simply be listed on graphic with almost all of the three minutes dedicated to describing what is shown on a particular tool, how the data is obtained and how useful information is obtained from the data, i.e. how the tool is used.

3. The parts under discussion have to be defined. For example, wheels are probably parts while spokes on wheels that use the traditional thin wire spokes are not parts. Similarly the bicycle chain is a part while the links are not. Bicycle wheel bearings are probably considered to be parts while the individual balls and races are probably not. Just as part count for an automobile will not typically include ever screw, bolt, nut or piece of fabric thread.

A typical mountain bike may have about 50 parts.

Synchronizing, or producing in sequence, means that parts prepared for a specific bicycle arrive at assembly when the particular bicycle does. For example, if custom bicycles are being produced, then the particular seat that goes with a particular frame based on the size of the buyer of the particular bicycle must arrive at the assembly work site at the same time. Synchronization may not be a realistic topic of discussion for custom mountain bicycle production operations since these specialty items will not be assembled using sequenced flow of parts to assemble. They are really one-of-a-kind products not manufactured in typical lean production systems but in craft type operations. The majority of parts are probably made in manufacturing operations.

4. It’s not clear what the manager’s current plan is, other than to take immediate action to implement a kanban system. The details of the plan are missing.

A suggested plan of action could be

Emphasize that the change to lean production will require a change in philosophy and that interest and the new view will have to be maintained throughout the changeover process
Draw up an outline of the steps required and add the right level of detail to the plan so that everyone at the plan presentation is able to understand what will be done. The outline and topics could be
- everyone has to be involved and committed to change
- how cost and financial considerations have to be addressed
- reconfigure the manufacturing system
- describe the kinds of machines that will be needed and if they are currently available

- establish production control based on the pull concept using kanban
- integrate inventory control into the production control system
- integrate quality control into the manufacturing system
- integrate preventive maintenance in the manufacturing system
- integrate suppliers into the system
- a proposed initial system design
- a plan for reviewing the initial design involving as many people as possible
- an implementation plan and schedule
- continuous evolution of the system is needed and processes must be established to assure it

Present the plan making sure to get as large an audience as possible
Discuss why moves to lean production might fail

- there is no champion(s) for the process
- failure to achieve zero-defect production
- there are hesitations about effects on individuals and hidden agendas
- middle management is fearful of loosing influence and control
- change is usually threatening
- funds are not committed for expenditures over long times
- loss of management interest if quick results are not apparent

Case Study:

Automobile Water Pump Impeller

1. This is another part that can be produced in a variety of ways. As designed, the part is a two-level part with flat surfaces. This, coupled with the relatively small surface area and small thicknesses, would make the part attractive for manufacture by conventional press-and-sinter powder metallurgy using a double-action press. Alternative means of manufacture would probably involve some form of casting, such as die casting, permanent mold, shell, or investment. It would be difficult for forming processes to produce the existing design because of the lack of draft or taper on the impeller blades. With design modifications, impression-die forging might be a possibility.

2. The relatively low mechanical properties, the low ductility, and the absence of a hardness or wear requirement make this part a candidate for a variety of materials. Because of the presence of coolant (an electrolyte material) and additional materials in the shaft and housing of the pump, material selection might be based as much on galvanic corrosion as on mechanical performance. Possible materials include aluminum, cast iron, copper alloys, stainless steel, and others.

3 - 5. Again, the spectrum of possibilities is great. If conductive material (i.e. a metal) is specified, consideration should be given to galvanic compatibility with what will likely be a steel shaft and the material to be used in the housing. Heat treatments would not likely be to produce enhanced strength, but may be specified to effect a stress-relief. Surface treatments might be such as anodizing, if aluminum were specified .

6. Since this part will be constantly exposed to water-based solutions over a range of temperatures, the response of polymers to water immersion would be a major consideration. Many polymers absorb water and exhibit dimensional swelling. By proper selection of resin, and the use of appropriate fillers and/or reinforcements, it would appear that a polymeric solution to the above requirements would indeed be feasible. Fabrication would be by one of the polymeric molding techniques. By selecting a nonconductive polymer, galvanic concerns would be removed, and the major concerns would now relate to mechanical durability -resistance to swelling, cracking and erosion.

A comprehensive reference book for those with interest in, or need to know,
how operations in the world's factories work,
and how common products, components, and materials are made.

Handbook of Manufacturing Processes

How Products, Components and Materials Are Made

James G. Bralla

With Contributions by a Distinguished
Editorial Board

Industrial Press, Inc.
New York

Library of Congress Cataloging-in-Publication Data

Bralla, James G.
Handbook of manufacturing processes / James Brella.
p. cm.
ISBN 0-8311-3179-9
1. Manufacturing processes–Handbooks, manuals, etc. I. Title.

TS183.B73 2006
670–dc22

2006041834

First Edition

Handbook of Manufacturing Processes
How Products, Components and Materials are Made

Industrial Press
989 Avenue of the Americas
New York, New York 10018

Editor: John Carleo
Copy Editing: Robert E. Green
Art Director/Production Manager: Janet Romano
The line drawings in this book, not attributed to other sources, were drawn by the author.
They were enhanced or redrawn for publication by Lorraine Pawlewicz.

Cover photo of engine block provided by GE Fanuc Automation

10 9 8 7 6 5 4 3 2 1

ABOUT THE AUTHOR

James G. Bralla has had a career spanning more than 50 years in manufacturing, as an engineer, consultant, and executive. He was Vice-President, Operations, for Alpha Metals, Inc., Director of Manufacturing, Asia, for the Singer Company, and Industry Professor at Polytechnic University. He holds a BS in Mechanical Engineering from Princeton University and an MS in Manufacturing Engineering from Polytechnic. He is a registered Professional Engineer, the editor of the *Design for Manufacturability Handbook* and the author of *Design for Excellence,* both published by McGraw-Hill.

EDITORIAL BOARD—HANDBOOK OF MANUFACTURING PROCESSES

The editorial board is made up of experienced individuals with expertise in certain fields of manufacturing who have prepared some material for the handbook or edited that prepared by others. Their participation is for the purpose of insuring the accuracy and completeness of the material.

Adlard, Edward J.—Makino Inc., Mason, Ohio—machining

Bralla, J. R. Casey—Manager of Manufacturing Engineering, Southco, Inc., Concordville, PA—plastics molding, cutting tool manufacture, cold headed fasteners.

Boss, Berdell G.—Partner, Pinecroft Farms, LLC, Binghamton, NY,—food processing and distribution.

Casteras, John, PhD.—Metallurgist, Vantage Motorcycles, Inc.—solders and soldering, chiefly as relating to electronic products.

Caulfield, Joseph, Senior Manufacturing Engineer, Southco Inc.—machine vision

Cocco, John, PE, Vice-President, Loctite, Inc. Rocky Hill CT—adhesive bonding

Companik, Edward, Marketing Director, U.S. Baird Corporation, Newington CT—Transfer presses and four-slide machines

Doan, Daniel—Electrical Consultant, E.I. Dupont de Nemours, Wilmington, Del.—chemical processes

Gillespie, LaRoux K.—author of the Deburring and Edge Finishing Handbook, published by SME. and President, Deburring Technology International—deburring

Griffith, Bill—CNC Product Manager, GE Fanuc Automation, Charlottesville, VA—numerical and computer control

McCormack, Tim—Manager, Custom Shop, Remington Arms Company, Inc., Ilion, New York—gun manufacture

Meisner, Oliver—CEO, ONYX Optics, Inc., Dublin, CA 94568—lasers

Mochnal, George—Director of Technology, Forging Industry Association, Cleveland, OH—metal forging processes

Norton, Robert L.—Professor of Mechanical Engineering, Worcester Polytechnic University—cam manufacture

Olsen, John, PhD.—Vice President, Operations, Omax Corp., Kent WA.—water jet and abrasive water jet machining,

Ord, William G., Vice President, Cornerstone Forest Products—lumber mill operations

Rae, Alan, PhD.—Vice President, Market and Business Development, NanoDynamics, Inc., Buffalo, NY—electronics manufacture

Rogers, H. David—Engineering Consultant, Westfield, NJ—monument fabrication

DEDICATION

This book is dedicated to the thousands of people, worldwide, who keep all the manufacturing processes described in this book operating productively. These people come from all walks of life with varied amounts of education, ranging from the grammar school level to PhD's and even post-PhD's. All, however, share certain attributes. One is dedication to the task of keeping their process in operation, with willingness to stay with a problem—beyond normal working hours, if necessary—until it is solved. A second attribute is extensive self-education in the workings of the equipment for which they are responsible. A third is an innate knack for analyzing a process problem, finding the root-cause of the problem, and the ingenuity, when necessary, to devise a quick fix. They may realize, for example, that a certain linkage is sticking, that there is too much play in some moving parts, that a detector is not signaling the condition for which it is designed, that the workpiece material is out of spec, or whatever one of the thousands of things that can go wrong is causing the malfunction of the equipment. Then they have the energy to try different approaches, to disassemble a device to find out what is wrong, to research a problem with others, or from source documents, to find out what could be amiss. After all this, they have sufficient skill to do what has to be done to put the equipment back into productive working order. This may involve such skills as machining, to make or modify a critical part, to replace electronic devices or printed circuit boards, to add a simple sheet metal shim, to design or build a tool or fixture, or to have the ability to work with others who provide the specialist skills necessary. The net result of their efforts and skills is the continuing operation of the equipment that they care for, so that we all can benefit from the products and goods that they make.

This book is also dedicated to Steve Bralla, my son, who happens to be one of the gifted people noted above, except that his particular field is the operation of sophisticated earthquake detection apparatus, rather than production machinery. Steve was faced last year with a diagnosis of acute myeloid leukemia, a devastating and frequently fatal disease. But through his courage, strength and willingness to undergo the lengthy and debilitating ordeal that a cure involves, the support of his family, and with the guidance of talented and dedicated medical specialists, he now tests to be cancer-free. I salute him and all those who keep the world's production machinery in operation, and dedicate this book to them.

James G. Bralla
North Jackson, PA

ACKNOWLEDGMENTS

I am indebted to the following people who provided valuable assistance in the preparation of this book:

Frank Andros, Mike DiPietro, Richard Redolphy and **Sandra Marsh** of the Integrated Electronics Engineering Center (IEEC) of Binghamton University—electronics manufacturing
David J. Aquilino, Bodine Assembly and Test Systems—automatic assembly
John Bartman, VP, Human Resources, Public and Media Affairs, Snyders of Hanover
Carolyn Boss—text editing
J. R. Casey Bralla, Manager of Manufacturing Engineering, Southco, Inc.—for much help in many areas, in addition to his Editorial Board participation
Matthew S. Bralla—fishing rods
Stephen J. Bralla, Scripps Institute, San Diego, CA.—lasers, sailplanes.
Andrew Broom, Eclipse Aviation—aircraft assembly, including friction stir welding
John Commander—Cookson Electronics Enthone—electronics
Sue Dean, CEO, Donald Dean and Sons, Montrose, PA—cabinet making
Victor DePhillips, President, Signature Building Systems, Inc., Moosic, PA 18507—prefabricated housing
Kate Dougherty, Cirrus Design Corp.—aircraft manufacture
Dave Duemler, CEO and Technical Director, and **Stephen Maund**, Director of Engineering/Manufacturing, Demco Automation
Renee' J. Fink, Executive Secretary, The Black and Decker Corporation
Paul Foster, retired plant manager, General Cable Corporation
Peter Frennborn, Alfa Laval, Inc.—plate type heat exchangers
Kristine Gable, Research Consultant, Corning Inc.
Ken Gilleo, ET-Trends, LLC—flexible circuit boards
Roger Glass, Emeritus Research Scientist, University of Michigan Aerospace Engineering
Ken Glover, Inland Paperboard and Packaging, Inc.—corrugated cartons
Angelo Gulino—Cookson Electronic Materials—solder and flux making
Charles A. Harper, Technology Seminars, Inc., Lutherville, MD
Steve Johnson and **Fran Borrego,** Universal Instruments—populating PC boards
Dawn Klehr, The Toro Company—lawn mowers
Jim Kessler, Service Forester, Montrose, PA—Applications of wood species
Don Lillig, Marley Cooling Technologies—cooling equipment
Roy Magnuson, PhD, Endicot Interconnect Technologies—electronics
Mark Martin PhD, president Design4X—aircraft
Jim McKee of McKee Button Co. Muscatine IA—button manufacture
Bob Papp—commercial designer and artist
Kelly Parke, Senior Designer, WMH Group—woodworking equipment

Amelia Paterno, Sharon Hoopes, and **Pam Bagnall** at the Susquehanna Borough Branch of Susquehanna County (Pennsylvania) library.
Mason and Michael Perryman, Rapport Composites—golf clubs
Anna Petrova—Bodine Assembly and Test Systems
Jerry Pinch, Pinch Heating and Cooling—air conditioners
Scott Plickerd, The McGraw-Hill Companies
Greg Pompea, Vice-president, Engineering and **Rob Horowitz,** Sales Manager, Contact Systems, Inc.
Sue Rehmus, General Motors—automobile manufacture
Bill Rollo, retired from The Singer Company.
Jim Rooney—retired from IBM.—electronics manufacture
Peter Schlotter, hunter—gun and bullet-making
Raymond P. Sharpe, Chief Executive Officer, Isola Group SARL
Wayne Smith and **Bob Hawley,** Smith-Lawton Mill Work, Montrose, PA—cabinet making
John Stein—Retired from the Singer Company—metal stamping
Gary Stitely, General Manager, and **Brian Shook,** Engineering, Landis Threading Systems
Brian Terski and **Jason Walden** of Pole-Kat—golf clubs
Carol S. Tower, librarian of Society of Manufacturing Engineers
Jason Tuttle, Dodds Company—woodworking
Jim Wilcox, PhD, of IBM, Endicott 607-429-3172
MaryAnn Wright—Engineering Supervisor, Metal Injection Molding and Powder Metallurgy, Remington Arms—gun manufacture

And, special thanks to my wife **Martha-Jane Bralla,** who has supported this project so well despite my physical and mental absences when doing the research, writing, sketching, editing and proof reading that this book required.

Readers are invited to call to my attention any errors that may have crept into the information presented in this book. Please address e-mail to info@industrialpress.com.

James G. Bralla

HOW TO USE THIS HANDBOOK

The book is in two sections: (I), the Process Section, in which common manufacturing processes in 17 key industries are described, and (II), the Products, Components and Materials Section, which explains how many of these are made.

Section I explains how each manufacturing process works, detailing what happens to the materials or workpieces that are being processed. Usually, these explanations are in general terms as they are not limited to a particular component or material. However, the description also identifies the normal components or materials to which the process applies.

Section II deals with specific products, components, and materials, outlining the manufacturing sequence and processes used for making each. It often refers the reader, using the designation of any applicable text entry, to where more detailed descriptions of the operations mentioned can be found in the book. This is done by showing, in parenthesis, the chapter and text entry designation from Section I, where the basic operation is described. For example, in the description of the manufacture of a metal part that requires case-hardening heat treatment, the description may include "(8G3b)" to tell the reader that the case-hardening heat treatment used on the part is described at greater length in entry G3b of Chapter 8.

The handbook text in Section I is organized in a typical outline structure to aid the reader in finding relevant information easily. Related processes are grouped together and sequential operations are covered in sequence when possible. Major topics are given an upper-case letter designation such as A, B, C, etc. Important sub-topics are designated with the capital letter and a number (for example, A1, B1, C1, etc.) Sub headings under these topics are indicated by adding a lower-case letter to the designation (e.g., A1a, A1b, A1c, etc.) The descriptions of further process variations may be given designations such A1a1, A1a2, A1a3, etc. For example, Chapter 1 is devoted to metal casting processes; section B in Chapter 1 covers sand-mold casting methods; entry B5 describes methods of making sand molds, B5e describes those methods that utilize a machine for the operation, and B5e1 describes one specific machine method, the jolt-squeeze method.

For ease of reference, the same designations used to identify text entries are also used to identify accompanying illustrations. For example, Figure 9B2 illustrates the process described in text entry B2 in Chapter 9. Figure 1B5e1 illustrates the jolt-squeeze machine described in entry B5e1 of Chapter 1.

Section II is simply arranged in alphabetical order by the name of the product, component, or material whose manufacturing method is described. Section II includes descriptions of manufacturing processes used in making each product, component, or material listed, though sometimes, if the process for that item has already been described in Section I, the Section II entry simply refers to the applicable entry in Section I. Thus, for the manufacture of gasoline, whose manufacturing process is described under "Petroleum Processing" in Chapter 11, the listing in Section II simply refers to (11H)—Petroleum Refining and Processing—where gasoline manufacture is described in considerable detail.

When an entry in Section II is referred to elsewhere in the book, the name is shown italicized to tell the reader that there is a description in Section II of how the item is manufactured. Thus, for example, if the reader sees a name such as "*detergents*" in italics, he or she knows that there is a description in Section II that tells how detergents are made. (Italics are also used in the text of the book to designate processes of particular importance.)

HOW TO FIND A HANDBOOK ENTRY

For a process description, if the usual process name is known, the reader can refer to the Index at the back of the book. If the reader is uncertain of the name of the process, he or she can refer to the table of contents, find the major heading where the kind of operation of interest is shown, and, by visually scanning the entries below the major one, find the listing and page number for the particular operation in mind.

For a product, component or material manufacturing description, the reader can refer directly to Section II of the book, where entries are arranged in alphabetical order or can refer to the Index to locate its page number. (Both Section II and the Index are arranged in alphabetical order, but Section II includes considerable descriptive material, and does not include listings of processes, equipment, methods, or operations by name, as does the Index.)

PREFACE

This is a reference book. It was prepared to serve as a concise, easy-to-read, source for those who need to gain an intelligent insight into the workings of manufacturing processes. It is also for those who want or need to know how particular products, their components, or their raw materials are made.

Many books that are currently available give some very worthwhile instruction about the methods used in specific industries; others present good information over some range of industries, but these are textbooks rather than reference books and none have the breadth of coverage that is included here. This book gives descriptions of key operations in the major production industries: Metalworking, including Casting, Metal Forming and Machining, and the Plastics, Ceramics, and Woodworking Industries. There are chapters on Joining and Assembly, and on Product Finishing. The Paper and Printing Industries, Textiles, Garment-Making, Chemicals, Food Processing, and Electronics are all included in this book.

There are other books that describe how some products are made, but they are usually aimed at the general public, especially younger readers, and are quite limited in both scope and the depth of information provided. There is no reference book on this subject with engineering-level information. This book is intended to fill that void.

An objective of the book is to provide clear, easily readable and concise explanations, so that the reader can easily gain an understanding of what is involved and how each process works. Although the book includes much technical detail, we have tried to avoid including non-essential complexities of any process, but to explain it concisely in simple terms, so that the reader, even if not technically trained, can understand and, if necessary, explain the method to others. The text has been prepared to be explanatory, straightforward, to-the-point, and practical (rather than theoretical). To aid in this end, descriptions have been liberally supplemented with illustrations. The objective of each illustration is to present a clear, easily understood view of the workings of the method covered. To this end, most illustrations are schematic, concentrating on the basic principles of each process and stripped of unnecessary detail.

WHO SHOULD USE THE BOOK

People for whom the book was prepared include the following:

manufacturing engineers, those who design, build, plan, execute and maintain the equipment, tools, and processes that make the things that the public buys and uses.

process engineers, those who plan and engineer the manufacturing steps, equipment and tooling needed in production.

manufacturing executives, managers, and supervisors who need to know and understand what their employees are doing and why, and what new processes and equipment should be considered to improve their operations.

students interested in a career in manufacturing and especially those pursuing a career in manufacturing engineering, who can use this book for current instruction and for future reference.

product design engineers and draftsmen, who should have this book available for reference so that they understand how the products that they design are made.

government officials who are responsible for operational safety (OSHA), environmental conditions, and other regulatory matters. They can gain a better understanding, with this book, of the factory operations that they regulate.

consultants who have, or wish to have, manufacturing clients and want to be sure that they understand what is happening in their client's operations. These consultants should have this book available for reference.

salesmen and sales managers who deal with customers that are involved in manufacturing, and who need to know more about their operations.

faculty of engineering schools

engineering societies involved in manufacturing or related subjects should have a copy of this book in their libraries and should offer it to their members.

state, city, county, town and college libraries, for their constituencies.

purchasing people who buy manufactured components and products.

quality control managers and specialists who can gain, with this book, a better understanding of the processes, whose products they monitor.

maintenance and reliability managers and technicians who can similarly benefit from a better knowledge of the processes they are responsible for.

DETAILED TABLE OF CONTENTS

Section I—Manufacturing Processes

Chapter 4—Processes for Plastics 147

Chapter 8—Finishing Processes (including Heat Treating) 329

Chapter 9—Paper, Fiber and Printing Processes 361

Chapter 10—Textile Processes 385

Chapter 11—Chemical Processes 417

Section I

Manufacturing Processes

Chapter 1 - Casting Processes

A. Melting Metal for Casting

A1. ***cupola melting*** - Now much less common due to environmental factors, this method utilizes a furnace in stack form as shown in Fig. 1A1. Fuel and metal to be melted are in direct contact. The stack is lined with refractory material and alternate layers of coke and metal are placed in it. Some minerals, primarily limestone ($CaCO_3$), are included with the metals to be melted. Air is blown through the stack from the bottom through openings called tuyeres. The bottom layer of coke is ignited initially. Heat from the burning coke melts the metal, which flows to the bottom of the cupola from where it can be removed by opening a tap hole. Slag is also removed from the bottom, from an exit hole just above the one used to remove molten metal. As the coke is consumed and the metal charge melts, the burning gradually proceeds upward. The upper layers are preheated by the flow of hot gases. Additional metal, coke, and limestone can be added from a charging door in the upper part of the stack as the operation proceeds. Metal charges may consist of steel scrap, cast iron scrap or pig iron, or, more commonly, a combination of them. The molten metal absorbs carbon from the coke, so cupola melting is generally restricted to cast, malleable, and ductile iron (though the electric arc method is preferred for the latter).

A2. ***electric arc melting*** - In this method, an electric arc similar to the one used in arc welding but

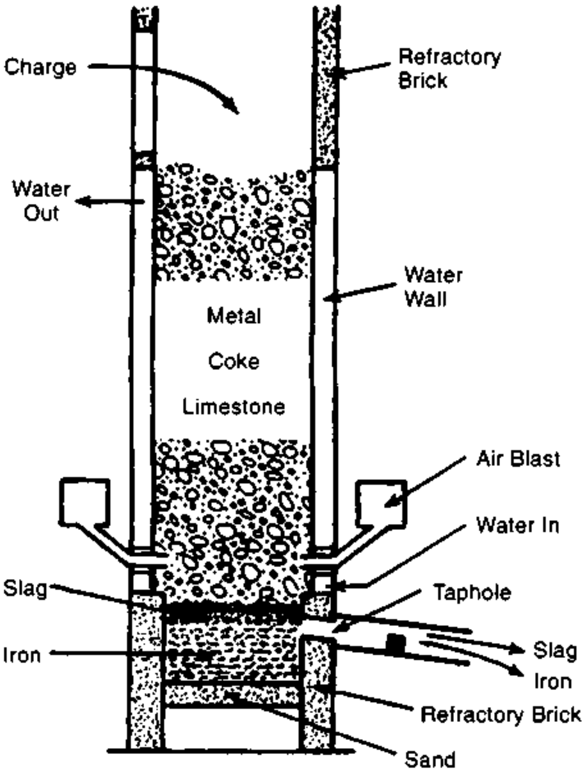

Fig. 1A1 Cross-sectional view of cupola melting cast iron. The metal charge (pig iron and scrap iron and steel) is in direct contact with burning coke. When the metal melts, it flows to the bottom of the cupola where it can be withdrawn. *(from Schey, Introduction to Manufacturing Processes, McGraw-Hill, New York, 1987)* much larger and more powerful, is used to provide the melting heat. In the *direct-arc* method, there are two arcs, one from an electrode to the metal and another from the metal to the second electrode. In the *indirect-arc* method, the arc extends from one electrode to another and the heat is transferred to the metal by radiation. Electrodes normally are made of carbon although, when molybdenum and other high-melting-temperature metals are processed, the electrodes may be of the same metal as that being melted. This variation is known as *consumable arc melting*. Fig. 1A2 illustrates the direct-arc method. This method can also be used with three electrodes and three-phase current. Electric arc melting is used extensively for in the production of alloy and carbon steels, and for malleable iron, ductile iron, tool steel, and high-strength cast iron. Control of environmentally undesirable emissions is easier with electric furnaces than with cupolas. An indirect arc is used in brass and bronze production.

A3. ***crucible melting*** - This method employs a cup-shaped, refractory-lined, metal furnace which is normally heated by gas or oil and sometimes by electrical resistance or induction. It has an inner crucible to hold the metal charge. The crucible is made of either a clay-silicon-carbide or a clay-graphite mixture. The furnace can either tilt for pouring or the crucible can be lifted out. Fig. 1A3 illustrates a tilting type with a lift-out crucible. The crucible method is used to melt brass, bronze, aluminum, and magnesium for sand castings. Except for induction heating, ferrous metals are not usually melted in this kind of furnace.

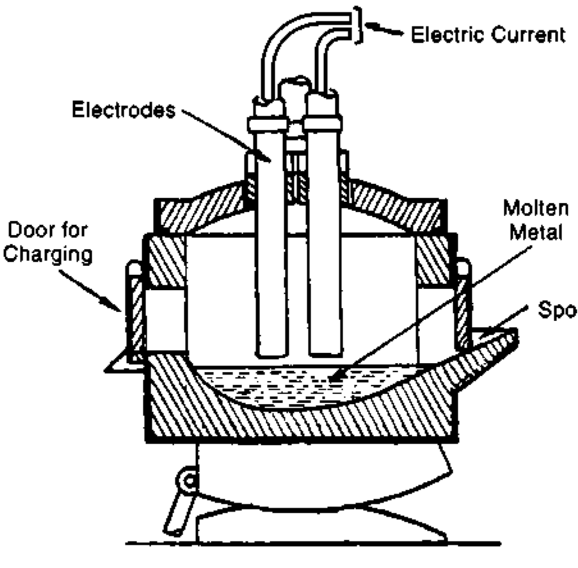

Fig. 1A2 A direct-arc furnace for melting steel or iron for castings. The arc passes from one electrode to the metal and back from the metal to the other electrode, providing heat that melts the metal.

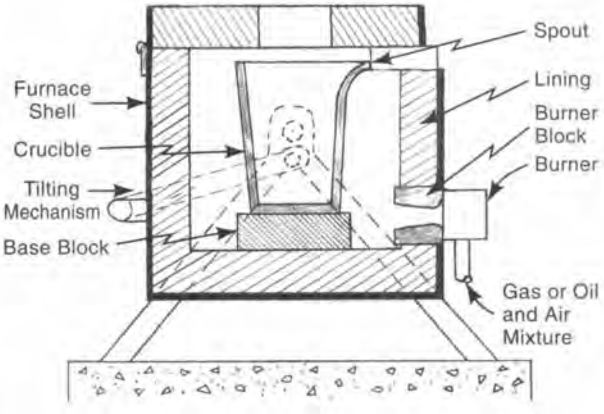

Fig. 1A3 Cross-section through a crucible furnace.

A4. ***air furnace (reverberatory) melting*** - has similarities to open-hearth melting. Fig. 1A4 shows a typical air furnace. Oil or pulverized coal is burned in one chamber and the charge is placed in another. Heat from the burning fuel passes over and is absorbed by the charge, melting it. There is no direct contact between the metal and the fuel, allowing carbon content to be closely controlled. Oil or finely pulverized bituminous coal are used as fuels. Some smaller furnaces use natural gas. This type of furnace is used in the production of castings from malleable and gray cast iron, brass, and bronze.

A5. ***induction melting (high frequency and low frequency)*** - With this method, alternating electric current in a coil creates a magnetic field that induces corresponding secondary electrical currents in the metal charge. The resistance of the metal in the charge causes its temperature to rise to the melting point. Melting can be very rapid and there is no pollution or contamination from the heat source. Induction melting is used for steel, brass, bronze, aluminum, and magnesium.

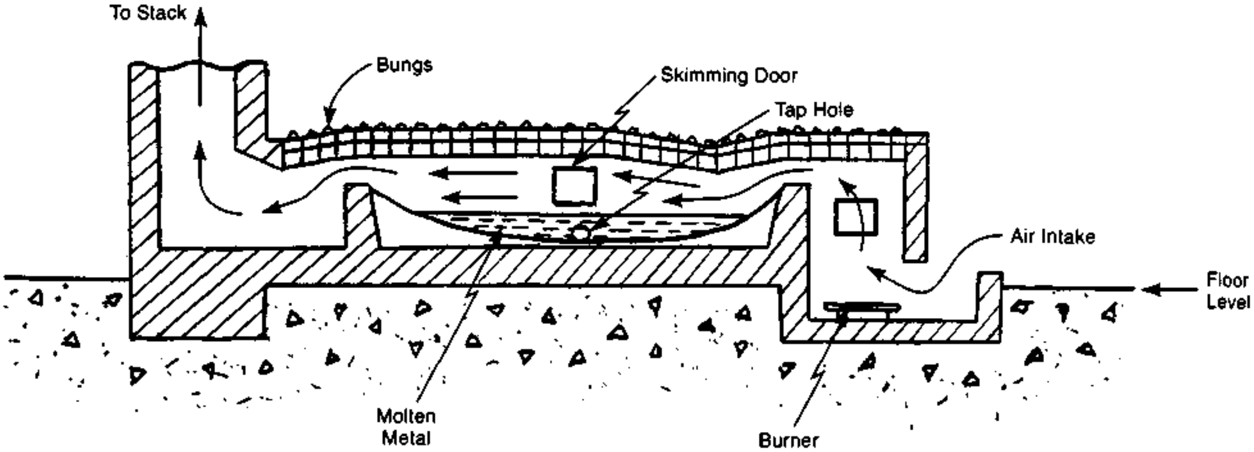

Fig. 1A4 An air reverberatory furnace.

With the *coreless* method, which commonly - but not always - is utilized at high frequencies, the coil surrounds a crucible containing the metal. The coil is made from copper tubing and water is circulated through the tubing to prevent the coils from overheating. Typical frequencies vary up to 10,000 Hz. but coreless furnaces can also operate at low frequencies (e.g. 60 Hz). The most common range is 250 to 3000 Hz. Melting is rapid. At the lower frequencies, the induction provides a stirring effect. At higher frequencies, higher power levels are possible. Brass, aluminum, cast iron, and steel are melted in coreless induction furnaces. Fig. 1A5 illustrates a typical coreless furnace.

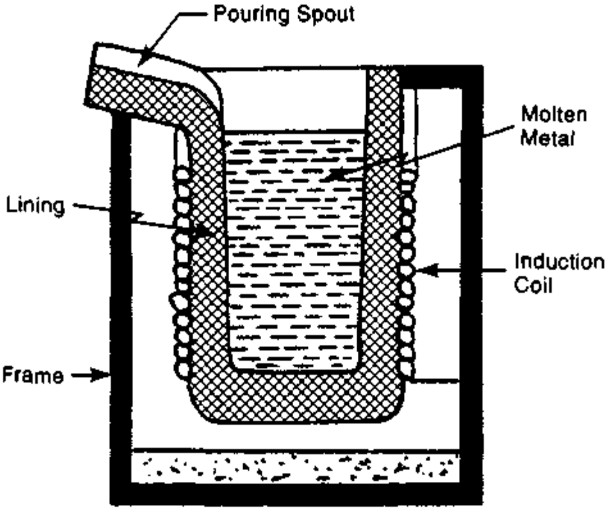

Fig. 1A5 A coreless induction furnace.

With the *channel* type of induction, the melting container itself forms a loop but only one portion of the loop is surrounded by the coil. The metal in this loop is heated by induction and the heat is transferred to the balance of the metal by convection and induction. The arrangement is shown in Fig. 1A5-1. Channel type furnaces operate at low frequencies. The melting rate is very high with this method and the temperature can be controlled accurately. However, there must be liquid metal in the channel for the induction effect to take effect, so an initial charge of enough melted metal to form a loop is required. Solid material can then be added. Low-frequency cored furnaces are often used as holding furnaces. Channel furnaces are used for brass and aluminum, and as duplex or secondary furnaces

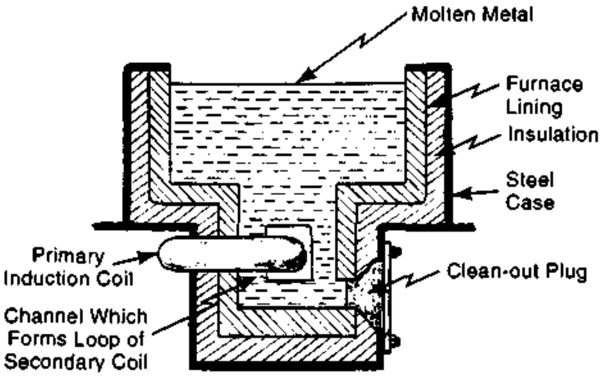

Fig. 1A5-1 A channel-type induction furnace. The molten metal in the furnace becomes the loop of a secondary induction coil.

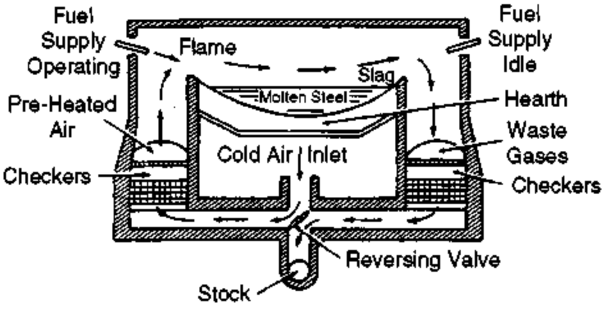

Fig. 1A6 Sectional-view of an open-hearth furnace. (*Courtesy Steel Founders' Society of America, Barrington, Illinois*)

for iron. In the latter case, molten cast iron from a cupola is fed to a channel induction furnace where the composition can be adjusted to meet specifications.

A6. ***open-hearth melting*** - This method, used in the production of steel and cast iron, is also used to supply molten metal for casting operations. Foundry open-hearth furnaces are usually smaller than those found in steel mills. Fig. 1A6 illustrates a typical open-hearth furnace which is both reverberatory and regenerative. Metal in the furnace is heated by a flame passing over the charge. The flame comes from the combustion of gas, oil, tar, or pulverized coal. The low roof of the furnace reflects heat downward to the metal in the furnace. Both fuel and air are fed from one side into the central area where the flame and heating take place. The chambers on the opposite side are heated by the flame and exhaust gases moving through them. The pool of molten metal in the furnace is shallow, which provides the maximum area for heat transfer per unit volume of metal. After a period of time, the direction of flow is reversed. The chambers heated from the previous cycle, in turn, heat the incoming fuel and air. Most open hearth furnaces are chemically basic (rather than acidic) as determined by the material of the brick furnace lining. The basic furnaces remove sulfur, silicon, carbon, and manganese from the charge metal. The charge used in making structural steel includes iron ore, limestone, scrap, and, later, molten pig iron. Additions can be made to the steel to produce the desired composition. Oxygen may be added to the furnace combustion area to reduce the process time and the amount of fuel required. Finished metal is removed from a hole in the rear of the furnace and transferred to a ladle.

A7. ***pouring*** - Metal is usually tapped from the melting furnace into either a ladle from which it is poured by gravity into the mold, or into one that is used to transfer a quantity of metal to a pouring ladle. Such transfer ladles are usually covered to reduce heat loss during transfer. Pouring ladle capacities range from about 60 lb (27 Kg) up. Ladles are frequently transported by overhead cranes. There are three basic types of ladles, as illustrated in Fig. 1A7: open-lip ladles that pour by

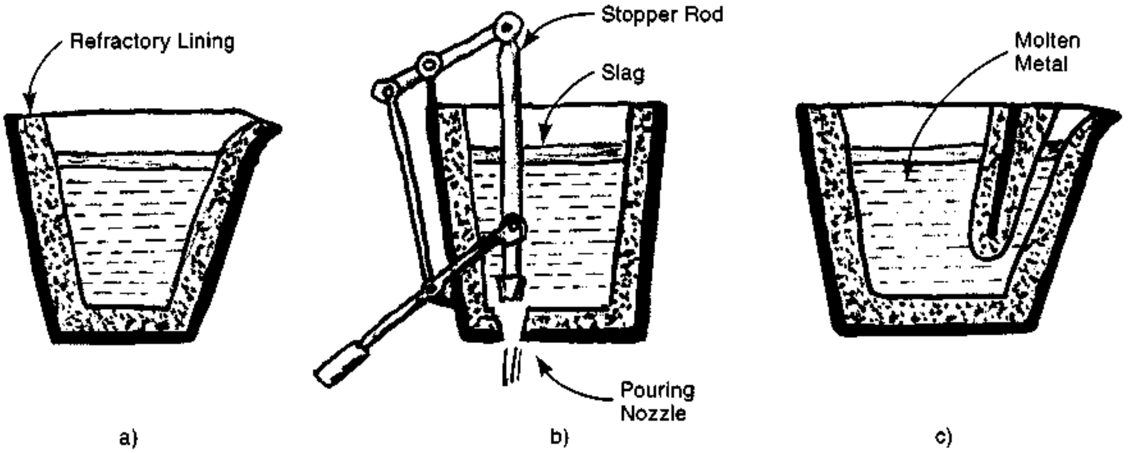

Fig. 1A7 Three different types of pouring ladles: a) a standard open lip-pour ladle. b) a bottom-pour ladle that avoids including slag in the metal poured. c) a "teapot" ladle that pours metal from near the bottom, avoiding the inclusion of slag in the casting.

tilting, "teapot" ladles that also pour by tilting but which avoid pouring slag, and bottom-pour ladles which also avoid pouring slag. Tilting ladles often utilize worm-gear tilting systems to provide better control and prevent the ladle from tipping too much or too fast. Numerous automatic pouring systems, designed to accurately meter the amount of molten metal poured, are also used. Some consist of mechanized or robotic dip-and-pour ladles. Others pour directly from a larger holding pot, using either stopper rods as shown in Fig. 1A7, or sliding gate valves. Some pouring vessels are fitted with electrical heating apparatus to maintain the metal at the proper pouring temperature. (The ideal pouring temperature involves a "superheat", a metal temperature sufficiently high to ensure that all parts of the mold are fully filled before solidification starts.) Other pouring systems include machine vision to sense when the mold is full, or weight controls to pour a prescribed amount, by weight, into the mold.

B. Sand-mold Casting

In sand mold casting the mold is made of packed sand. Molten metal is poured into a cavity in the sand. When the metal cools and solidifies, it has the shape of the cavity. The sand is removed, normally by a shaking action that is vigorous enough to cause the mold to break apart. The casting is then cleaned of sand; flashing and sprues are cut off and any jagged or sharp edges are ground smooth. (See snagging, B8g.)

The sand mold includes binders to hold the packed sand together and other additives. Bentonite clay is one of the most common binders. Organic materials and a certain amount of water are also used. The sand is either shoveled into the mold flask, dropped or blown from an overhead chute, or thrown by a sand slinging machine. The sand mixture is packed around a pattern which duplicates the shape wanted in the cast part. Various hand and machine approaches are used to compact the sand. Ramming, squeezing, slinging, and jolting are described below. After the sand has been compacted, the pattern is removed, leaving a cavity that retains the inverse of the pattern's shape. The sand is held together strongly enough so that it withstands the pressure and any eroding effects of the melted metal; is porous enough to allow gases to escape; yet it is weak enough to yield to shrinkage forces when the metal solidifies, and can be broken up and removed easily from the finished casting. The pattern can be of almost any material. In low quantity production situations, it may be made of wood. For repetitive manufacture, steel is more common. Plastics, aluminum, and other materials are also used. The pattern has the same shape as the desired cast part, but is slightly larger to provide a shrinkage allowance for the metal as it cools.

A typical sand mold is shown in Fig. 1B, and is normally made in two halves. The pattern is correspondingly split. The top half of the mold is called the "cope"; the bottom half the "drag". Both are held in a box-like container called "flasks". An entrance channel for the molten metal into the mold is provided by a basin and sprue formed in the cope half. Runners and gate are normally in the drag half. If the casting has some hollow or undercut elements, one or more additional sand pieces, called "cores" may be used. If a core is used, it is inserted in the mold cavity. The cope half of the mold is made similarly to the drag half and, after the pattern is removed, is inverted and placed over the drag. Pins in the flask insure alignment of the mold cavity. The two mold halves are held together with a clamp or weight. Sand mold casting can be used to make simple and complex parts from a wide variety of metals, though cast iron is the most common. Shapes with undercuts, contours, re-entrant

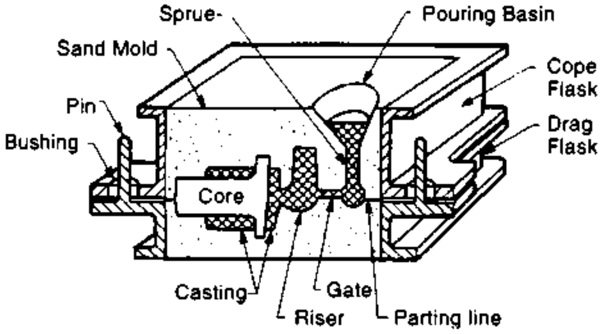

Fig. 1B A typical mold arrangement for sand-mold casting showing a typical core, pouring basin, riser, gate, and cope and drag flasks. *(From James G. Bralla, Design for Manufacturability Handbook, McGraw-Hill, New York, 1999)* angles and other complications of shape can be cast. Castings weighing only one ounce to those of many tons can be cast with the process. Typical applications of sand mold casting are: automotive engine blocks, cylinder heads, connecting rods, crankshafts and transmission cases, machine tool bases and other mechanical components.

B1. ***green sand casting*** - is the basic sand-mold casting process described above. The green sand mixture consists of sand (usually silica), 6 to 8 percent clay binder (usually bentonite), 2 to 3 percent water and additives (sea-coal, starches, cellulose). ("Green" refers to the mixture, not the color.) It is moist and is not dried out before the molten metal is poured into the mold. The ingredients are mixed together thoroughly in a sand muller machine. The green sand process is inexpensive and has great versatility in regard to the metal that is cast and the size and shape of the castings made. Other sand-mold processes may give greater accuracy and smoother surface finish, however. The sand can be reclaimed and used again many times. The green sand method is the most common and least expensive sand casting process. Castings up to about 500 lb (230 kg) are commonly made with this approach. Automotive engine blocks, transmission cases, differential housings, railroad parts, and machinery components are all typical parts. Metals cast include gray cast iron, malleable and ductile iron, cast steel, aluminum, brass, bronze, and other non-ferrous metals.

B2. ***dry sand casting*** - In this process, the green sand mold is dried or baked before it is filled with molten metal. Typically, the mold is heated to 300°F (150°C) or higher, by baking or forced hot air until most of the moisture is evaporated. This approach produces a stronger mold and there is less gas (steam) generated when the molten metal is poured into the mold. One or more coatings of refractory material - silica, zircon, or graphite - are usually applied to the mold surface in a water or solvent carrier. Dry-sand molds can withstand more handling and longer storage, and have better resistance to the pressure of molten metal. The dry-sand process is normally used for medium-size to very large, multi-ton castings where greater mold strength is needed to withstand the mass of the molten metal. Dried sand gives a better surface finish but is more costly than green-sand molding because of energy, space, and equipment costs. With dry-sand casting, pitch is most commonly used to provide carbon instead of the sea coal used with green sand. Gilsonite, glutrin, corn flour, and molasses are other additives. These materials become thermoset at the baking temperature, adding to the strength and rigidity of the mold. Coarser sand is used to facilitate natural venting. Strong flasks and reinforcing bars, which extend into the sand, are also used to insure rigidity of the mold. Large castings in dry sand molds are cooled slowly to reduce internal stresses in the casting and the possibility of cracking.

B2a. ***skin-dried casting*** - To reduce the lengthy drying time of dry-sand casting, the drying is often limited to a depth of only about 1/4 to 1/2 in (6 to 13 mm). The patterns are usually first coated with a wash of refractory material. Heat for drying is supplied from a torch, from infra-red lamps, or from hot air. The mold is then referred to as a *skin-dried mold.* The dried skin is backed up with a mixture of green and dry sand. The approach is used extensively for the casting of steel, which involves higher pouring temperatures, and has also largely replaced dry sand molding for other applications. The casting surface is improved by elimination of the moisture in the facing sand, which could cause pin holes in the casting. Shake out is also facilitated. Additional binders such as linseed oil, corn flour or molasses may be used in the facing sand to improve the strength of the dried mold skin.

B3. *other sand-mold casting processes*

B3a. ***shell mold casting*** - In this process, the mold sand is mixed with phenolic or another thermosetting plastic resin, either in liquid or solid form, with a catalyst. There is no clay binder but some other additives may be included for specific purposes. The mixture, when used, is dry and free-flowing. The pattern that forms the sand mold is heated to about 400 to 600°F (200 to 300°C), and clamped to a container of sand, which is then inverted, dropping the sand on to the heated pattern. When the sand is in contact with the heated pattern for a short period, the resin melts and then begins to polymerize, becoming hardened enough to bind the sand particles together. Coated sand particles that are not in contact with or near the pattern do not get heated sufficiently and do not bond together. Thus, a layer of bonded sand is formed next to the pattern. The pattern and sand are then re-inverted and the loose, non-bonded sand drops free. The pattern and the shell of bonded sand are heated additionally to complete the polymerization. The shell, normally from 0.2 to 0.4 in (5 to 10 mm) thick, is removed from the pattern by ejector pins and the flat faces of the two shell halves are fastened together with adhesive. Loose sand, gravel, or metal shot may then be used to support the mold during casting. This method is adaptable to large-scale production conditions and can produce castings of high complexity and accuracy but of limited size. The surface finish is smoother than that attainable with other sand casting methods because of the effect of the resin and the finer sand normally used.

The process is also used for making cores for molds used with other sand-mold processes. When shell cores are made, the core box is metal and is heated to cure the phenolic resin. Production is rapid. Cores can be made hollow by removing the sand from the center of the core before it has received enough heat to melt and cure the resin. The shell molding process is illustrated in Fig. 1B3a.

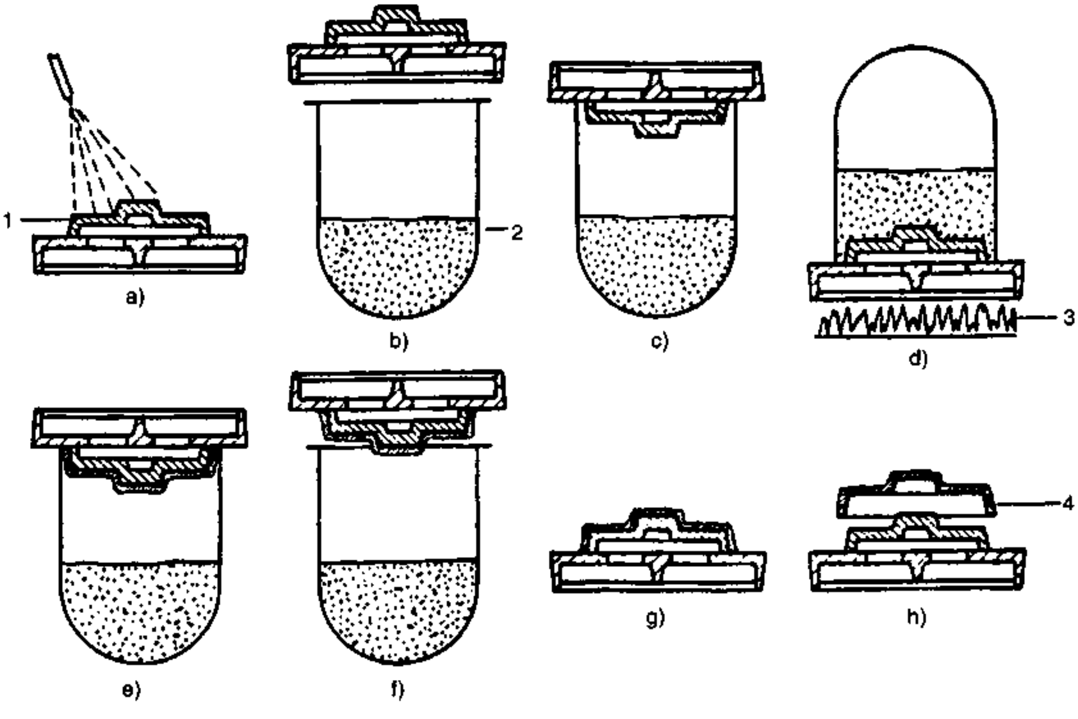

Fig. 1B3a The shell molding process. a) A silicon parting agent is sprayed on the preheated pattern. b) The preheated pattern is then brought to a dump box that contains a sand-resin mixture. c) The pattern is inverted and clamped to the top of a dump box. d) The dump box is inverted, sand falls against the pattern and is further heated for a short period. The resin in the sand mixture next to the hot pattern starts to set, causing sand particles to adhere together. e) The dump box is turned upright and the sand not in contact with the hot pattern or near to it, being unaffected, falls away. f) The pattern and the sand-resin shell are removed from the dump box. g) The pattern and shell are baked to fully cure the resin. h) The pattern is withdrawn from the shell. Two shells are fastened together, placed in a flask and supported with back up sand or metal shot. Molten metal is poured into the cavity formed by the two shells. Identified items: 1 - pattern, 2 - sand-resin mixture, 3 - burner, 4 - shell mold half. *(from Davidson, Handbook of Precision Engineering, Vol. 10, McGraw-Hill, New York)*

B3b. ***lost foam casting*** - This process is also called *full mold casting, evaporative casting* or *disposable pattern casting.* It differs from conventional sand mold casting in that the pattern is made of foamed polystyrene plastic (See 4C4.) instead of conventional pattern materials and is consumed in the process. The polystyrene pattern is coated with a slurry of permeable refractory material by dipping, spraying or brushing. This coating is dried before the pattern is placed. The mold is made by placing the pattern - which is made complete with sprues, risers, runners, and gates - in a flask and packing sand around it. The foam pattern remains in the mold during pouring and melts and vaporizes immediately on contact with the molten metal. Thus, it is not necessary to remove the pattern from the sand prior to pouring. The molten metal takes the place of the foam plastic pattern and fills the space it occupied in the sand. The sand mold is in only one piece; there is no cope or drag, hence the name, "full mold casting". Because gas is produced from the vaporization of the foam pattern, the sand mixture must be highly permeable to allow these gases to escape. Hence, there is no bonding agent for the sand. Loose sand is flowed into the flask to surround the pattern. Then, the filled flask is vibrated to compact the sand. If the pattern is of such a shape that the sand can fill the openings in it, no separate core pieces are required. Therefore, there is much less need in the process for separate core pieces. On the other hand, since the pattern is consumed during the process, an additional pattern has to be made for each casting in the lot. If the quantities are large, the foam pattern is molded by the normal methods used for polystyrene foam (See 4C4b). If quantities are limited, or if the casting shape is such that the pattern cannot be molded in one piece, the pattern may be fabricated by gluing together machined or molded polystyrene foam blocks. Pouring of a lost foam casting must be

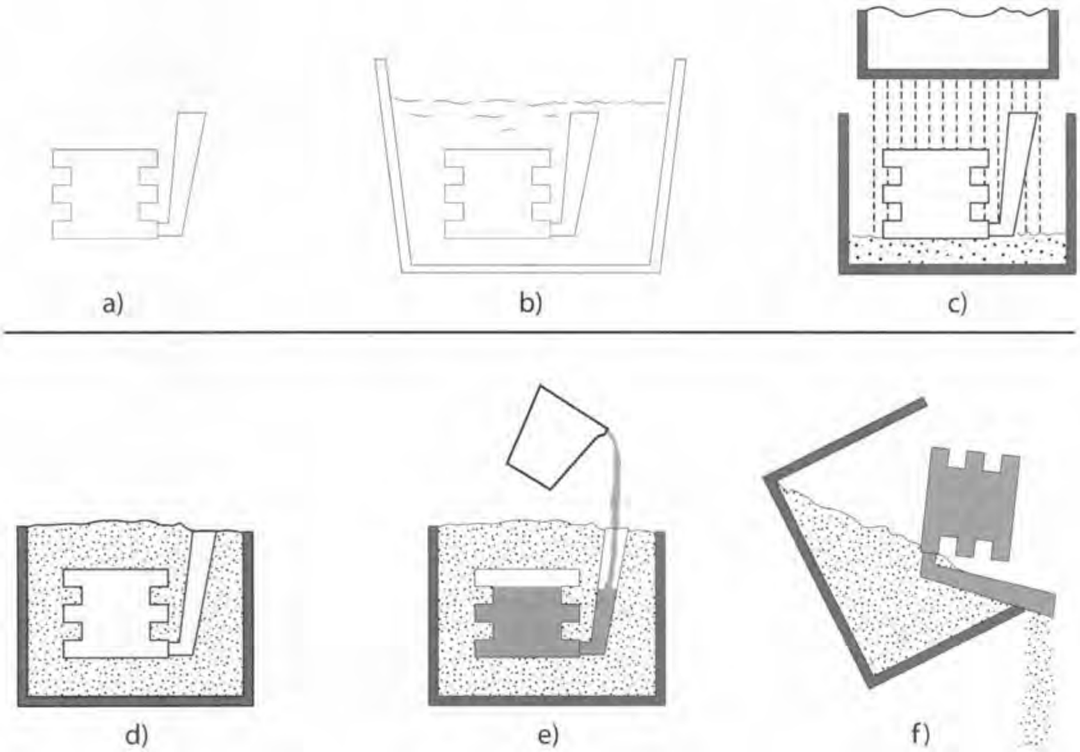

Fig. 1B3b Lost foam casting. a) The pattern is made of polystyrene foam. b) The pattern is dipped in a refractory slurry, c) The pattern is placed in a flask and surrounded with unbonded sand, d) The filled flask is vibrated to compact the sand. e) Molten metal is poured onto the pattern, vaporizing and replacing it. f) The solidified casting is removed from the flask; the sand is recycled.

controlled to maintain pressure in the unbonded mold so that it does not collapse. After pouring, the mold is allowed to cool and the metal to solidify. The flasks are then moved to a shakeout area where they are inverted to dump the loose sand. Castings are then cleaned by conventional methods. The lost foam process is suitable for complex shapes with undercuts and other irregularities. Complex castings can be made more easily than with other sand casting processes. Cleaning is also simpler than with other sand mold processes; there is no parting line, and the sand, being unbonded, is more easily recycled. The process has come into widespread use for automotive castings and is illustrated in Fig. 1B3b.

B3c. ***magnetic molding*** - is a variation of lost foam casting in that a polystyrene foam pattern is used and there is no cope or drag. However, instead of the sand used to back up the mold, iron powder with particles of 0.004 to 0.020 in (0.1 to 0.5 mm) in diameter is used. This iron is compacted by vibrating the flask and then is magnetized with a magnetic field to hold it in place during pouring. The magnetic field is turned off after the poured metal has cooled and solidified. The casting is then easily shaken out and the metal powder can be reprocessed. The heat conductivity of the iron powder results in a finer grain structure of the casting. The process has been used for casting steels, copper-based alloys and cast iron.

B3d. ***V-process casting (vacuum molding)*** - is another process that uses loose sand to back up a mold. In this case, the sand is contained between two plastic sheets, one of which is in the shape of the mold cavity. There are two such pairs of sheets filled with sand, one for each mold half. A vacuum is drawn between each pair of sheets to hold them against the sand. The outer plastic sheet, holding the sand, is flexible and essentially flat and does not require forming. The inner sheet is formed to cavity shape by conventional thermoforming processes as described in chapter 4, and this is the first step of the casting process.

Fig. 1B3d illustrates the operation sequence. Thermoforming and mold making take place at one location as a single operation sequence. The forming die for each inner plastic sheet stays in place beneath the sheet until a mold flask is put into position over it and is filled with sand. The mold flask has a vacuum connection. The equipment is vibrated to compact the sand, excess sand in the flask is removed, a pouring basin and runner are formed in the sand as needed, and the remaining sand is leveled and covered with the outer sheet of plastic film. A vacuum is applied to the sand so that atmospheric pressure, acting against the outer sheet and the formed sheet, holds the sand in position, producing a mold of high hardness. The flask is then lifted from the forming pattern while still under vacuum with the plastic sheets and is assembled with a similar flask for the other mold half. The mold halves are kept under vacuum during pouring and until the cast metal has solidified. The formed plastic sheets vaporize from contact with the poured molten metal. When the vacuum is released, the sand falls away and a clean casting remains. The process is used for production of medium-large castings at moderately high production levels.

B3e. ***cement-sand molding*** - simply involves the use of about 10 percent Portland cement (plus water) as a binder for the sand mold. This process variation is used for large parts/large molds where the improved strength of the cement in comparison with other binders is important. The sand-cement-water mixture is formed into mold halves immediately after mixing but full curing requires another 24 to 72 hours. The molds may be stored for extended periods. A disadvantage of the high strength of the cement-sand molds is that they are less apt to yield to shrinkage forces and some casting shapes and materials may be susceptible to tearing.

B3f. ***loam molding*** - is suited for large castings of circular shape. Patterns are not used; the mold cavity is made to approximate shape manually using a structure of bricks or wood to hold the sand. A slurry of coarse sand, with a high percentage of clay and water, is worked into the cavity over the structure to further form the approximate shape. Then, as shown in Fig. 1B3f, a profile board is swept from a central upright spindle through the rough cavity to scrape away excess sand and produce a cavity of the required shape. The mold is heated and thoroughly dried and a coating of refractory material is applied.

The cope half of the mold is made from a series of cores placed side by side around the central axis. Alternatively, if there is a flask of sufficient size

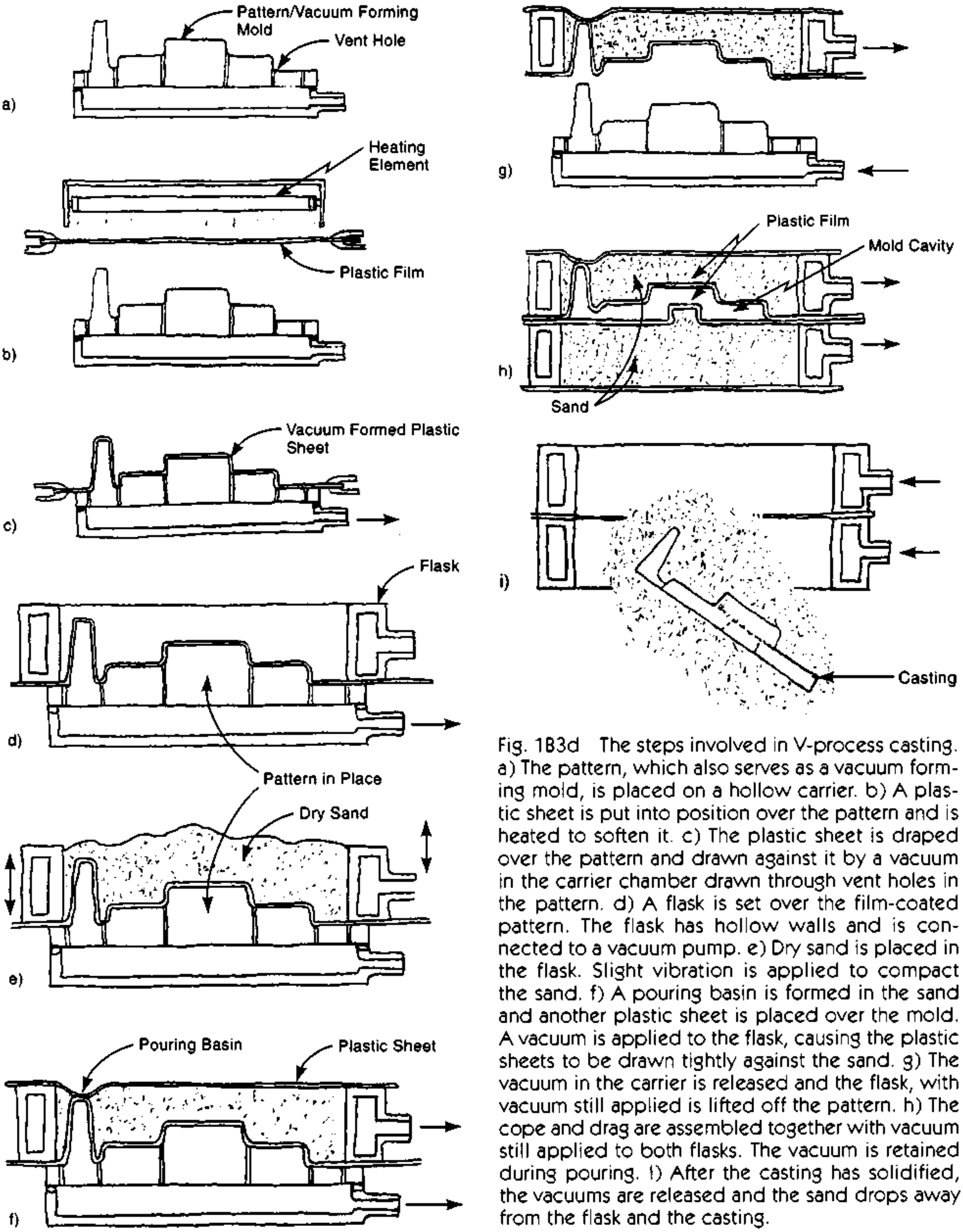

Fig. 1B3d The steps involved in V-process casting. a) The pattern, which also serves as a vacuum forming mold, is placed on a hollow carrier. b) A plastic sheet is put into position over the pattern and is heated to soften it. c) The plastic sheet is draped over the pattern and drawn against it by a vacuum in the carrier chamber drawn through vent holes in the pattern. d) A flask is set over the film-coated pattern. The flask has hollow walls and is connected to a vacuum pump. e) Dry sand is placed in the flask. Slight vibration is applied to compact the sand. f) A pouring basin is formed in the sand and another plastic sheet is placed over the mold. A vacuum is applied to the flask, causing the plastic sheets to be drawn tightly against the sand. g) The vacuum in the carrier is released and the flask, with vacuum still applied is lifted off the pattern. h) The cope and drag are assembled together with vacuum still applied to both flasks. The vacuum is retained during pouring. i) After the casting has solidified, the vacuums are released and the sand drops away from the flask and the casting.

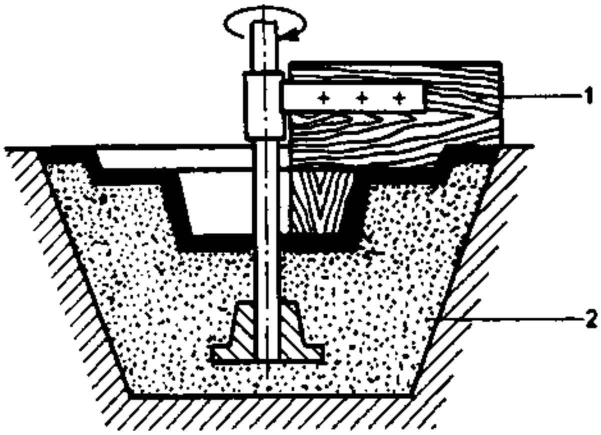

Fig. 1B3f Loam molding with a sweep, rotating about a central axis to form a round shape. 1) wooden sweep. 2) pit mold. (*from Davidson, Handbook of Precision Engineering, Vol. 10, McGraw-Hill, New York*)

and the necessary handling equipment is available, the cope can be made by methods similar to that for the drag, or by conventional methods and fitted in place over the drag. Skilled workers are required for satisfactory results. Equipment is not extensive: a bed plate, cover plate, spindle, and arbors for cores are needed. Straw, hay, cloth strips, or sawdust, may be used to reinforce the sand mixture. These materials burn off during casting. Large bells, cylinders, and rolls are cast with this method. Loam molding is currently in only limited use.

B3g. ***flaskless mold casting*** - is a high-production, automatic green-sand process. Casting rates of over five hundred pieces per hour are feasible. A typical mechanized sequence includes mold-making, core placement, pouring, cooling and shake-out, all automatic and all linked together by a conveyor in one production area. The flaskless process uses a four-sided mold chamber in which the molds are formed. The chamber is filled with a sand mixture from above by gravity and air pressure. The molds are formed and maintained with the parting line between mold halves in a vertical position. The pattern plates are supported vertically in the molding chamber with a plate for half of the mold cavity on each side of the chamber. The sand is compacted between the two plates by horizontal squeeze pressure. Each mold, then, has a half-cavity on each side, the cope half on one side and the drag half on the opposite. Cores, if needed, are inserted automatically.

One of the patterns swings out of the way and the molds are pushed together side-by-side, providing a complete cavity between them and, as the operation proceeds, forming a continuous line of molds. There are no flasks; the weight of the molds pushed together and the bonding of the sand is sufficient to resist any sideways thrusts. Sand is firmly compacted by air and hydraulic pressure to provide the holding strength needed without flasks. Pouring is automatic. The metal enters a basin and sprue, formed by the pattern, at the parting line of the two mold halves. As the operation proceeds and more molds are added to the side-by-side line of molds, the metal cools in those that have been filled, and the castings solidify. They are conveyed to a section where they are separated automatically from the sand and then to a cleaning area. The sand is recycled. Fig. 1B3g illustrates the mold making steps and how the molds are pushed together, side-by-side. Needless to say, a considerable investment is required for a complete flaskless molding operation. Gas stove grills, sewing machines, pipe fittings, and valve bodies are cast with this method.

B3h. ***Antioch process*** - In this process, gypsum plaster is used as a binder for the sand. Talc, sodium silicate, bentonite, Portland cement and terra alba may also be used to provide certain characteristics to the mixture. Water is added to the dry mixture and the resulting slurry is piped or poured around the pattern in the mold flask. A typical mixture is 50 percent sand, 40 percent gypsum, and 8 percent talc, plus water equal to half the weight of the dry mixture. After the material sets, it is air dried, heated with steam for 6 to 8 hours in an autoclave at 15 lbf/in^2 (103 kPa), air dried again for about 14 hours, and then oven heated to 450 to 475°F (230 to 250°C) for 12 to 20 hours. This sequence results in a mold permeability much greater than that achievable with regular plaster molds while retaining a smooth surfaces. Close tolerances can be maintained in the casting but the process is limited to non-ferrous metals. Alloys melting at 1900°F (1040°C) or less are suitable. Applications include the casting of aerospace parts and critical automatic transmission parts for automobiles.

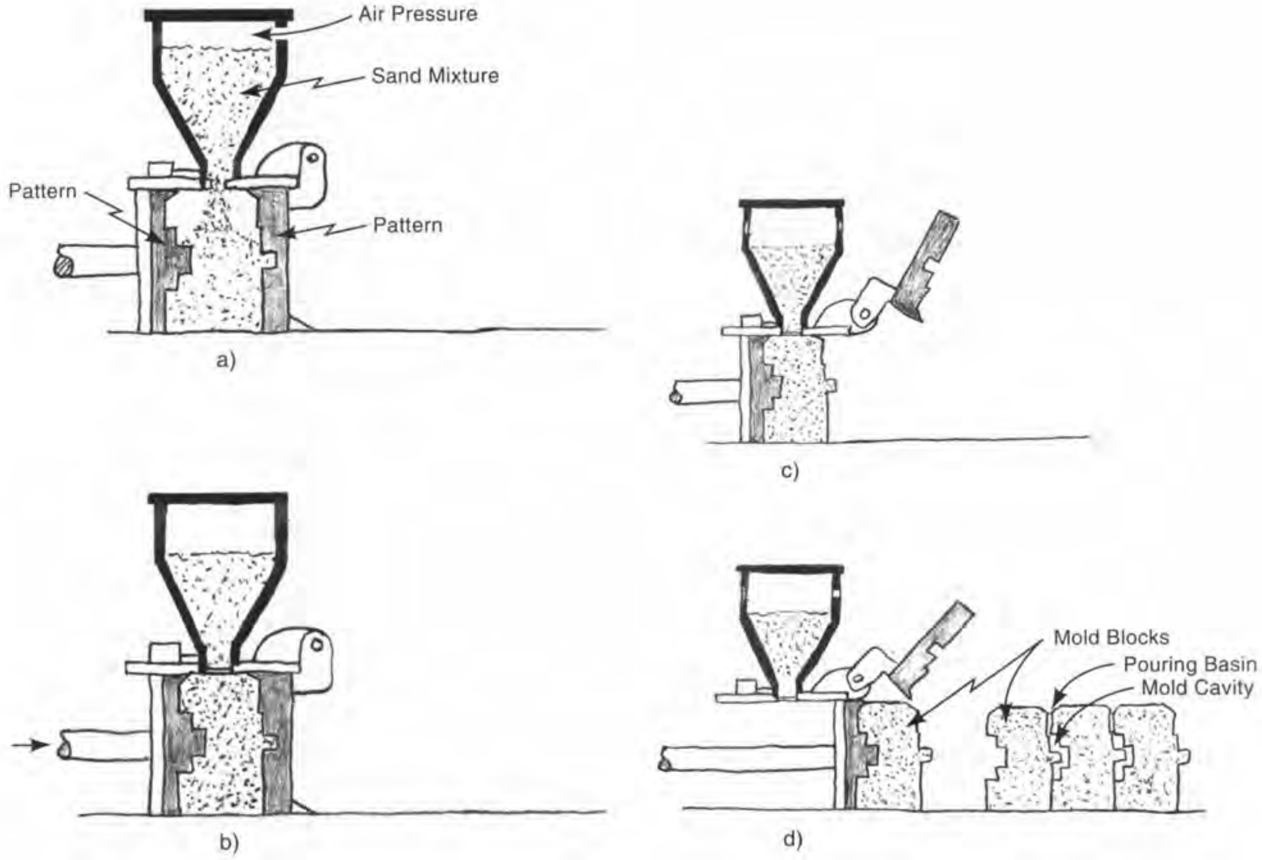

Fig. 1B3g Flaskless molding. a) Sand is blown between two pattern plates in a molding chamber. b) The sand mixture is squeezed to form a dense mold block which has half the mold cavity on each side. c) One of the patterns is withdrawn so that the newly formed mold block can be moved. d) The mold block is pushed tightly against previously made mold blocks. The pouring basin, sprue, and mold cavity lie at the vertical parting line between mold blocks.

B4. ***core making*** - Cores are used whenever there is an undercut, opening, or hollow area in the casting that cannot be made by the mold. Cores, sometimes called *dry-sand cores*, are separate pieces made to the shape of the opening, and are supported by the external mold. Fig.1B shows the placement of such a core in a sand mold. Cores are made from sand mixed with a binder to hold the sand grains together strongly enough to allow handling and placement of the core in the mold. One or more of a variety of binders may be used including linseed oil or other oils, phenolic resin, sodium silicate, bentonite, or other clay, and cereals. Core sand, with the binder, is compacted in a metal, wood, or plastic mold, usually called a "core box". After the core is removed from the core box, baking may be employed to set the binder. Some binders are activated by a reactive gas without additional heat. Another binder needs no external heat or reactive gas: the binder ingredients react and cure without external agents. Which process is selected depends on a number of factors: the size and shape of the core, the production quantity of the casting requiring the core, the metal being cast, and the mold-making process involved. Finished cores are placed in the mold before the two mold halves are placed together. *Core prints*, recesses in the mold, or *chaplets*, small metal pieces that will fuse with the molten metal and become part of the casting, are used to properly locate and hold the core in the mold. Sometimes, complex or large cores are made by gluing two or more simpler or smaller cores together. Typical cast parts requiring cores are: exhaust manifolds of internal combustion engines, and cylinder heads and engine blocks with cooling channels.

B4a. ***green sand cores*** - are not cores in the sense that a core is a separate piece inserted in the mold. They are appendages of the green sand mold that form openings or holes in the casting. When a center hole is needed in a casting for pulley, gear or other round part, the hole may be formed by a green sand element of the mold itself. The term, "green sand core" is sometimes used for such elements with "dry sand core" referring to those that are separate and made independently from the mold. Green sand cores are weaker than dry sand cores, require draft, and are suitable only for short, large, openings.

B4b. ***core blowing*** - is a pneumatic process for filling and compacting core sand in core boxes in production quantities. The premixed sand and binder are added to a chamber that is then sealed except for ports that are placed in line with inlet ports of the core boxes. The sand is "blown" with a sudden blast of high pressure air (40 to 100 lbf/in^2 (275 to 690 kPa) from the chamber and into a core box. The kinetic energy of the air/sand/binder mixture provides the force needed to pack the sand. The method used for hardening the binder depends on the chemical nature of the binder, but phenolic resin-coated sand is a common approach and the phenolic is cured with heat. All steps in the operation are automatic and production is rapid. Blown cores are used for applications requiring mass production of small or medium-sized cores.

B4c. ***core baking*** - The binder for the core sand is hardened by drying or polymerizing it in an oven of controlled temperature. Core-oil binders using linseed or vegetable oil are commonly oxidized and hardened by baking. Urea-formaldehyde and phenolic resins are also oven baked. These cores are formulated with the flour of corn or another cereal and/or clay and water, which coat the sand and provide sufficient green strength so that the cores can be handled. They are then removed from the core boxes before curing and placed in an oven. Ovens may be continuous, with a metal mesh conveyor, or stationary, the choice depending on the production level and size and complexity of the core. Baking is for one hour or longer at 400 to 500°F (200 to 260°C), the time depending on the thickness of the core section. When fully cured, the cores are removed from the oven and allowed to cool to room temperature.

B4d. ***oil-oxygen process*** - for core making. In this process, a combination of oils and additives is used with the sand. The oils polymerize when they contact oxygen-bearing activators (perborates, percarborates, permanganates, peroxides), and bond the sand particles together. Dry sand, additives, and activators are mixed together. The sand mixture flows easily into core boxes and does not have to be rammed. Depending on the amount and nature of the additives and activators, as well as the temperature and the presence or absence of metallic dryers, the additives begin to gel. When they are sufficiently hard, the cores can be removed from the core box, and are usually baked in ovens at 400 to 450°F (200 to 230°C) until polymerization is complete. The resulting cores are stable dimensionally, and sufficiently strong. After the casting has solidified, the core sand is easily removed. The process is used for a wide range of ferrous and nonferrous casting alloys. However, its principal use is in large castings made in small quantities. Large gears, steam turbine impeller wheels, and bridge construction components, are typical applications.

B4e. ***furan no-bake core process*** - Furans are a family of thermosetting resins that, when cured, act as binders for core sands. Curing takes place at ambient temperature and begins when two or more of the binder components are mixed together with the core sand. Curing is slow enough that the sand mix is flowable and workable for a period of time so that core boxes can be filled. After an additional period, curing has progressed enough so that the cores can be removed from the boxes. The curing then proceeds to completion. (Although baking is not strictly required, it may be used to speed curing and drying.) The time required for both preliminary and final curing can be varied from a few minutes to a number of hours, depending on the resin formulation. Both fural acid and phenolic acid resin systems can be used with this approach.

B4f. ***carbon-dioxide process***[1] - This process uses 3 to 6 percent sodium silicate as a binder for the core sand. Sand compaction in the core box is by blowing or other conventional methods. The compacted sand - mixed with sodium silicate - in a corebox is exposed to carbon dioxide gas for from 5 to 15 seconds. With small cores, the core box is double-walled or the pattern is hollow, to allow a closed conduit for the gas. With larger cores, lances are used to inject the gas into holes made in the core. In both methods, the gas permeates the core sand and causes the sodium silicate to gel and harden. Cores then are stored for 24 hours or more, while the hardening of the silicate continues, producing a core strength of about 100 to 200 lbf/in^2 (700 to 1400 kPa) so long as the atmosphere is not too humid. No baking is required; the operation can be performed at room temperature. [However, baking at 400°F (210°C) is sometimes done after the CO_2 treatment.] Surfaces of the cores are often coated with a graphite or zircon refractory coating using an alcohol wash. Most of the sand can be reclaimed for further use after pouring and shake-out. Iron, steel, copper, and aluminum alloys are cast with these cores for many applications.

B4g. ***shell process for cores*** - is essentially the same as the process used to make shell molds. See B3a above.

B5. *sand mold methods*

B5a. ***ramming*** - is the packing of sand in a mold. The term usually refers to the hand operation performed with a hand tool, a *rammer*, which provides weight and a small, flat, packing surface to aid the operation. Pneumatic hand-operated rammers are also used. Hand ramming is labor-intensive, produces more variable results, and is slower than mechanized methods but is suitable when production quantities are too small to justify mechanized methods. Ramming is also useful to supplement sand slinging in large floor and pit molding operations.

B5b. ***bench molding*** - For small castings, the mold making and pouring may be done on a workbench where the work surface height is more convenient.

B5c. ***floor molding*** - When larger castings are to be made, it is common for the mold making and casting operations to take place on the factory floor. Sand compaction may be done by hand ramming, sand slinging, or large machines of other types. Sand is applied in layers and each layer is carefully knitted to the adjacent layers. The use of very hard sand compaction is necessary because of the weight of the casting and the amount of molten metal poured, especially if large flasks are not available to contain the sand. (When flasks are used they are normally so large that they require the use of an overhead crane. Otherwise, the cope may be made up of a series of side-by-side cores.) Dry-sand molding is often used. Cement-bonded sand or loam molding may also be employed.

B5d. ***pit molding*** - is used when the castings are too large to fit in flasks that would hold the cope and drag. Instead, a pit in the foundry floor takes the place of the lower half of the mold. The pit is filled with the sand to be used. An upright pattern is lowered and pressed into the sand, and additional sand is rammed tightly around it. Sets of cores, arranged side by side, are used to provide the cope half of the mold. These large castings are cooled slowly, sometimes over several days, before the mold is opened, in order to minimize internal stresses.

B5e. ***machine methods*** - In production situations, several machine methods are available to supplement or automate the sand mold-making operations, which would otherwise be manual. Mechanized methods typically provide more uniform sand densities than manual ramming. Often, the machines not only compact the sand, they invert the mold and remove the pattern from the sand. Mechanized methods include jolting, squeezing, jolting-squeezing, sand slinging, and flaskless casting.

B5e1. ***jolt-squeeze methods*** - use a machine that packs sand around a pattern by raising the pattern plate and flask with sand for a few inches and then allowing them to fall to an abrupt stop. The inertia of the falling sand packs it around and against the pattern. The operation is repeated until the desired density of compaction of the sand is achieved, but some hand or pneumatic ramming may also take place. Then, the machine uses pneumatic or hydraulic pressure to lift the table and force the packed sand in the flask against a flat plate that is fixed in position. The pressure further densifies the sand packing in the flask. In rollover machines that process both mold halves using a match-plate pattern (See B5e4 below), the double flask is inverted, sand is added, and the operation is repeated for the other mold half. The flasks are separated (The cope is lifted.), the pattern is removed, and the cope is lowered onto the drag to complete the mold. Fig. 1B5e1 shows some of the key steps of the sequence. The degree of mechanization and automation of the operations, other than jolting and squeezing, varies with the installation. High production volumes and large sizes of the molds make mechanization of lifting and inverting and other steps more economically justifiable. After the completed mold is assembled, it is normally placed on a conveyor that transports it to the foundry pouring area. Jolt-squeeze sand compaction works best when molds are not too deep and the casting shape is somewhat shallow and horizontal. Both *jolting* and *squeezing* may be performed as single operations on either jolt or squeeze machines, depending on the casting involved. Squeeze machines are limited to molds only a few inches thick. Some squeeze machines use a rubber diaphragm and air pressure to squeeze the sand.

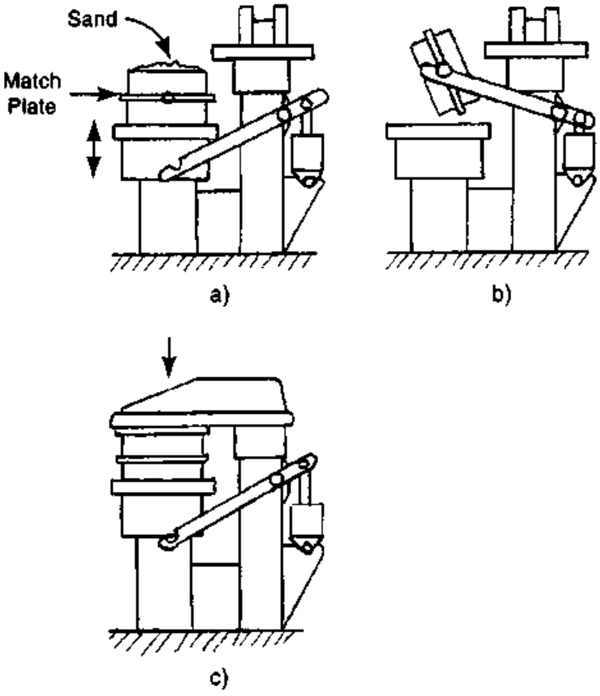

Fig. 1B5e1 A typical jolt-sqeeze-rollover machine with a match plate pattern. a) The sand in one mold half is jolted by rapid up and down motions of the machine table to compact it around the pattern. b) Rollover - The mold is inverted after the drag is completed so that the cope half can be filled. c) The head of the machine indexes over the mold and the squeezing cycle takes place to fully compact the sand.

B5e2. ***sand slinging*** - compacts the mold sand by slinging or throwing it at high velocity against the pattern in the flask. Centrifugal force from a rotating impeller provides the high velocity. The operation is fast and can produce uniform compaction. However, when sand slinging is used in jobbing foundries, considerable skill on the part of the machine operator may be necessary to insure consistent results and uniform mold density. Supplemental hand ramming may sometimes be employed but the process provides very dense and hard molds. For larger molds, the slinger machines are portable and are brought to the mold location.

B5e3. ***rap-jolt machines*** - are similar to jolt squeeze machines but, instead of jolting the pattern plate and flask, a weight strikes the underside with a controlled force at rapid intervals. The pattern plate and flask do not move up and down but the rapping causes the sand to densify. Squeezing is part of this method also and it may take place simultaneously with the rapping. The method provides dense, hard molds.

B5e4. ***match-plate molding*** - has patterns for the cope and the drag mounted on opposites sides of a single metal plate. Fig. 1B5e4 shows a typical match plate pattern. When these patterns are used, both the cope and drag halves of the mold are made in one operation, one on each side of the plate. Gravity fill, followed by a pressure squeeze, is one method used to supply and compact the sand. Sand fills the flask on one side of the plate, a plate closes the flask, the flask is rotated, and the other side is filled by gravity. Then the two sides are compacted by the same squeezing operation. Another approach is to blow the sand in

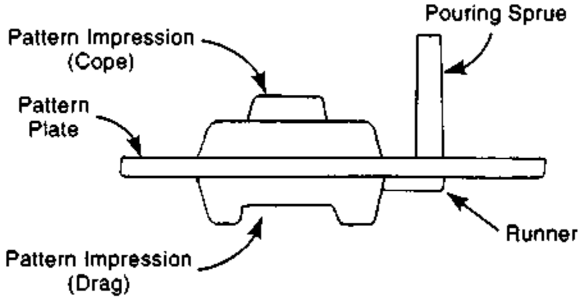

Fig. 1B5e4 A typical match plate pattern. Note that the two half patterns, for the cope and drag cavities, are placed on opposite sides of the plate. Sprues, runners and risers are also included in the pattern.

on both sides of the pattern plate at the same time. Then the two halves are squeezed simultaneously. After squeezing, the mold halves are separated and the pattern is withdrawn, a core is placed, if applicable, and the cope and drag are assembled together in preparation for pouring. (Also see jolt-squeeze mold making above.) Match plate molding is suitable for high production situations. Gates and runners are normally included as part of the pattern.

B6. *sand processing*

B6a. ***sand mulling*** - or mixing is performed by a machine, a sand muller. Sand, and for green-sand molding, water, clay, carbonaceous material, and other additives are loaded into the machine. The muller has two rollers (muller wheels) at the ends of a horizontal arm that rotates. The rollers with two plow-like blades, break up agglomerates of sand and binder and distribute binder, water, and additives throughout the mixture. The machine operates at a low speed. Fig. 1B6a illustrates a typical batch type sand muller. There are also continuous mullers in which ingredients are fed into the equipment at one end and exit at the other end after being blended. One such continuous muller uses two connected side-by-side mullers similar to the one illustrated. When sand is processed after it has been used in casting, ingredients are replenished as needed and are blended. (Casting sand is re-used but is normally blended with a certain amount of fresh material.) After mixing, the sand is typically conveyed to an aerator that separates the sand grains and improves flowability and thence conveys it to hoppers serving the molding operations. Other types of equipment are available for sand mixing, some of which can operate with shorter mixing times than the conventional unit pictured in Fig. 1B6a.

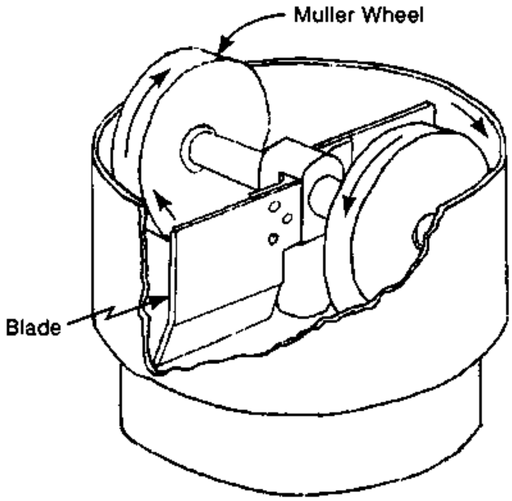

Fig. 1B6a A typical batch-type sand muller. Both the muller wheels and blades move and mix the sand, binder, and other ingredients.

B6b. ***reclamation of sand*** - is increasingly important in light of the increasing costs involved in the disposal of used sand. Reclamation is a feasible alternative, but is more difficult if several types of binder are mixed. Three reclamation methods are in current use: *mechanical reclamation, thermal reclamation* and *wet reclamation*. After these methods are used, additional sand, binder, and other additives are provided to insure that the sand mixture, including reclaimed material, meets specifications.

B6b1. ***mechanical reclamation*** - uses the sand muller described above to break up lumps so that only particles the size of sand grains remain. However, the process also involves several other steps such as the separation and removal of metal using magnetic or screening methods, and scrubbing, which hurls the sand against a target plate, either with high volume air flow ("pneumatic scrubbing") or centrifugal force ("mechanical scrubbing"). The sand grains impact against each other and against the target plate. This tends to remove the residue of bonding resin from the grains. A dust collection system removes the resin husks and various fine particles from the sand. If necessary, the sand is kept in the system for repeated action until the desired degree of removal of unwanted material has taken place. The processed sand is cooled, if necessary, and is screened or air classified to remove any further foreign or undersized material. Sometimes, both mechanical and pneumatic scrubbing is performed in sequence on the same lot of sand. Make-up sand is added as needed and is blended with the reclaimed sand. Typically, the finished product will be 80 percent reclaim and 20 percent new sand.[1]

B6b2. ***thermal reclamation*** - uses similar steps but includes heat processing. The sand is heated in a rotary kiln to a temperature high enough to ignite and burn off organic resins used in the shell molding process - about 1470°F (800°C). The burning of the resins contributes to the heat required for the operation. One method utilizes a refractory-lined rotary drum with an elevated feed end. Burners inside the drum at both ends are directed at the cascading sand flowing through the drum or, in other designs, external burners provide sufficient heat to ignite the resins. The drums are relatively inexpensive but have high heating costs and some weaknesses in control of material flow and air for combustion.

Fluidized bed machines are also used for thermal reclamation. Such machines, have a combustion chamber with provision for flow of air and hot gas from the bottom sufficient to fluidize the sand in the chamber. Burners are located below the chamber in the flow of incoming air and also in the chamber with the sand. Sand is introduced through a higher port of the chamber and withdrawn from a lower port. All resins and other hydrocarbons are burned off with this system. A second combustion zone above the chamber burns off any waste gases. This approach requires a larger investment than a rotary kiln but provides better energy efficiency and better control of the operation.

Clay-bonded sands can also be processed thermally. After the sand is crushed and metal residues are removed, it is fed into a calciner, which heats the mixture to a temperature sufficient to calcinate the clay but not high enough to cause the clay to fuse to the sand particles. Temperature control is critical. Following this step, the sand is cooled and processed with the scrubbing steps described above.

B6b3. ***wet reclamation*** - is used for sand mixtures bonded with silicates. A water wash replaces the heating cycle of thermal reclamation. It removes the silicate residues. The first step, however, is the breaking and crushing of lumps in the mixture. Then the water wash takes place, followed by sand and liquid separation. The sand is dewatered and dried. The liquid is treated to agglomerate the residues and allow separation by settlement. The water is then treated to permit safe disposal. When properly performed, all the sand processed can be re-used. The only new sand needed is to make up any that is lost.

B6c. ***metal separation from sand*** - It is necessary to remove smaller pieces of metal from the sand. These include sprues, runners, etc. that are separated from the casting in the shakeout operation. With iron and steel castings, these tramp metal pieces can be removed magnetically. A common approach is to use a belt conveyor for the sand and to place magnets both above and at the end of the conveyor. (See 11C8d.) With non-magnetic metals, screening is the most common method, using multiple screens of successively finer mesh. Other machines, whose method is based on the density difference between the metal and the sand, are also available.

B6d. ***cooling of sand*** - is necessary after use because hot sand causes moisture and other problems. Bentonite clay does not function as a binder if the temperature is above about 115°F (45°C). Sand does not conduct heat well and a mass of sand in storage will remain its heat for a long period. Cooling is accomplished by spraying the green sand with water and blowing air through the sand. Evaporation of 1 percent water content cools the sand by 45°F (25°C).[3] Water is sprayed on the sand, and air is blown through it in either a rotary drum or through a screen that retains the sand. In the latter method, the sand becomes a fluidized bed. With both the drum and fluidized bed methods, sand is fed from one side of the device and exits at the other, thus providing a continuous operation. Both air flow and moisture addition must be carefully controlled so that the sand mixture is not made too wet and that the amount of desirable fine materials carried away with the cooling air is not excessive. In some arrangements, many of the fine particles carried away by the cooling air are returned to the sand mixture.

B7. ***pattern making*** - Patterns are made to produce the proper sizes and shapes of cavities in the sand molds. Except for some very simple shapes, usually those that are circular, a pattern is necessary if the mold cavity is to have the correct shape and dimensions. Patterns are typically made from wood, plaster, plastics, various metals, and, for lost foam castings, from polystyrene foam. For investment castings, patterns are made from wax or plastics. Aluminum, brass, and cast iron are common metal pattern materials. The greater the production required, the harder and more wear-resistant the pattern material should be. Patternmaking may be costly because the process is lengthy and largely manual. Patterns must be slightly larger than the casting they will produce because of the shrinkage of metals as they change from the liquid to solid state and cool to room temperature. The initial operation for many pattern materials is contour milling. The pattern is typically rough contour milled with the machine under either hand, template, or computer control. It is then finished by hand with filing, sanding, and polishing operations.

Metal patterns are often produced by first making a wooden pattern and then casting a metal replica. Wood patterns are usually varnished to provide a moisture seal and smoother surface. Some of the available rapid prototyping methods are useful for making patterns suitable for various casting methods, chiefly for investment casting of smaller quantities. (See Chapter 14.) The laminated object method (LOM)(14A5a) is used to make wood-like casting patterns.

B8. ***post-molding operations***

B8a. ***shakeout*** - is the operation that separates castings from the sand mold. It is the first operation that takes place after castings solidify and cool in the mold. The basic method employed in the operation is to subject the mold and casting to a strong vibrating motion, which causes the sand mold to break up and fall from the casting. The sand falls through a grating that supports the casting but allows the sand to fall to a collection bin or conveyor below. Fine dust is collected by a cyclone-type dust collector. There are four prime methods by which shakeout is carried out: 1) *vibrating conveyor* - The molds containing castings are placed in a pan or trough that moves the casting with a vibratory motion as the sand falls away. 2) *shakeout table* - or deck, which processes the castings on a batch basis. This approach is used for lower quantity production. The frequency of vibration is lower, but with greater amplitude for larger, sturdier, castings and at a higher frequency and lesser amplitude for thin-walled or otherwise weaker castings. 3) *rotary shakeout* - This uses equipment that tumbles the molds and castings in a rotating cylinder. Castings are fed into the cylinder at one end and exit at the other. Sand also normally exits at or near the end but sand discharge openings can be at other points along the cylinder. Light castings with thin walls may not be suitable for this method. 4) *vibrating drum* - a large drum with a bottom grating allows the sand to fall as the drum vibrates. The drum does not rotate but the vibration imparts a rotary motion to the mass of sand and castings in the drum.

These devices all provide some degree of cooling to the sand and castings in the drum. Rotary shakeout machines may be equipped for water addition to provide increased cooling. Shakeout machines remove almost all the mold sand from the castings. Abrasive blast cleaning, which follows shakeout, removes whatever sand remains on the casting surfaces after the shakeout operation.

B8b. ***core knockout*** - Aluminum and other non-ferrous castings are poured at a lower temperature than iron or steel castings and the metal temperature may not be sufficient to burn out organic binders in molds and cores, making them less easily removed from the castings in shake out. This is particularly true with cores for hollow sections, which are protected by metal sections of the casting from shake out and tumbling forces. It is more common, in non-ferrous castings, to have a separate operation to remove core sand. One method involves the use of a manually operated chisel, which vibrates pneumatically. The impact of the vibrating chisel blade breaks up the core sand, which falls away. Another method uses a chisel or other tool that is mounted on a frame and pushes the core sand from the casting, or breaks it up. The casting is handled manually but the machine holds, advances, and retracts the vibrating tool. Other machines, sometimes designed or arranged for use on a specific casting, provide vibration to either tools or the whole casting to break up and remove the core sand. Holding fixtures are used to position the casting for maximum effect. Some machines use high-frequency mechanical vibration rather than pneumatic oscillation to create the forces needed. High pressure water jets, shot blasting, and vibrating media are used in other equipment. These vibration methods tend to generate high noise levels and some dedicated machines include acoustic enclosures.

B8c. ***blast cleaning*** - is a fast method for removing residual sand and scale from a casting after shake out. It also improves the surface finish of the casting. The blast medium is either sand, metal shot, grit, or glass beads, which are propelled against the casting by air, water nozzles, or mechanical means. Centrifugal wheels provide the most common propulsion method. See Fig. 1B8c-1. The shot, grit, or sand is fed to a rapidly rotating wheel, that has vanes to pick up, accelerate, and expel the media. The wheels can deliver larger quantities of media than nozzles, but nozzles can deliver the media more selectively to recesses and other areas needing special attention. The blasting operations produce dust, which must be contained except when water is used as the carrier for the media. The castings may be tumbled in the blast chamber to expose all surfaces, may be on a turntable, or may be carried on an overhead hook-type or other conveyor. Smaller quantity production can be processed in batch-type tumble blasting machines, as shown in Fig. 1B8c-2.

High production equipment utilizes a belt conveyor with means to tumble the castings as they pass under the blast nozzles. High production equipment may also have multiple blast sources arranged so that they reach all surfaces of the workpiece. Robots are now used to handle and position castings so that the blast medium strikes all necessary surfaces. For aluminum castings, the blast cleaning process can provide a more uniform surface finish, an improvement in appearance, and closure of surface porosity in addition to the cleaning effect.

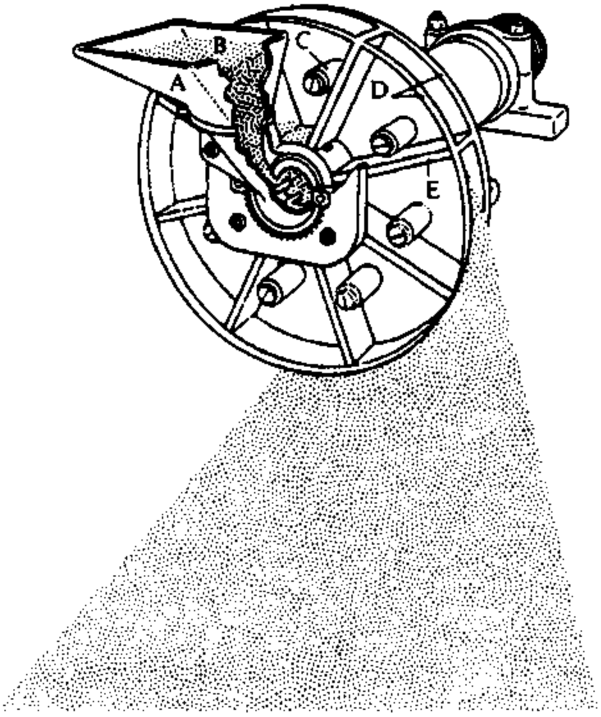

Fig. 1B8c-1 The wheel mechanism that uses centrifugal force to propel the grit, metal shot, glass beads, or sand in a blast cleaning machine. *(Courtesy Wheelabrator. Wheelabrator is a registered trademark of Wheelabrator Technologies, Inc.)*

B8d. ***tumble cleaning*** - Castings small enough to be placed as a group or lot in a rotating tumbling barrel can be cleaned of sand residues, scale, and fins by tumbling. Star shaped pieces of iron are included in the barrel with the castings and they abrade and burnish the castings as the barrel rotates, removing the sand and smoothing the surfaces. Sometimes water and a caustic are also included to hold down dust. Brass and bronze castings are tumbled with steel or iron balls, sand, or pumice, with water and detergents to improve their surface finish[2]. Tumbling can also be combined with blast cleaning as noted above for smaller castings. The tumbling action exposes all sides of the casting to the blast.

Previous Page

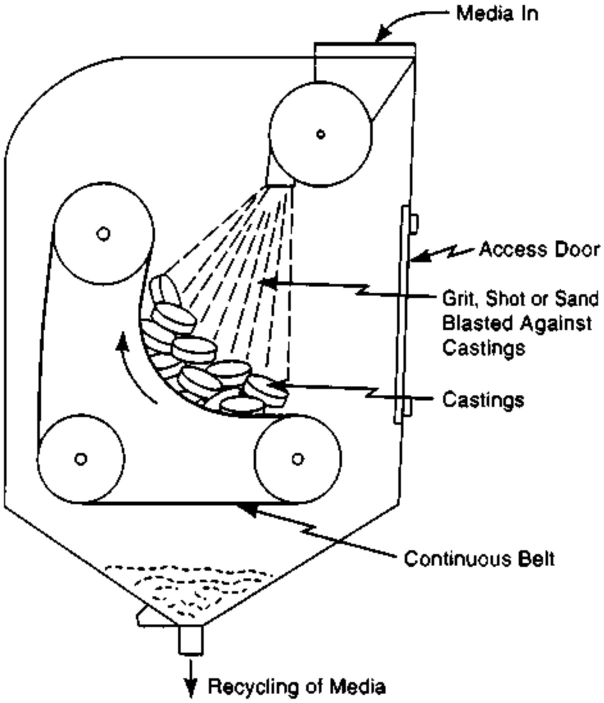

Fig. 1B8c-2 A tumble blasting machine for cleaning castings. The continuous conveyor causes the castings to tumble while being subjected to the blast of media, which removes sand and scale from the surfaces of the casting.

B8e. ***wire brush cleaning*** - is often used on aluminum, brass, and bronze alloy castings. It can produce a shiny surface on the casting. Various types and hardnesses of brushes can be selected, depending on the cast material, its shape, and the results desired. Power-driven rotating brushes are usually used. The operation may be performed robotically.

B8f. ***gate, riser and fin removal*** - This operation is sometimes referred to as *fettling*. It can be accomplished with any of a variety of metal cutting devices such as band saws, shears, abrasive cut-off wheels, flame cutting torches, and pneumatic hammers. Flame cutting is more common on steel castings if the gates and risers to be removed are large. Powder-assisted flame cutting (See 3H1 and 3H2) is sometimes used on alloys that are oxidation-resistant. The operation may be performed by robots.

B8g. ***snagging*** - utilizes portable and powered grinding tools, stationary stand-grinders, or swing-frame grinders, to remove excess metal from castings manually. The operation provides rough grinding only; further machining is required to produce accurate surfaces. Fins and flashing are often removed by snagging and the operation is also applicable to forgings. Hand chipping tools, including pneumatic hammers, are also used.

C. Other Expendable Mold Processes

C1. ***ceramic mold casting*** - The ceramic mold process has similarities with investment casting, sand mold casting, and plaster mold casting. It is similar to plaster mold and sand mold casting in that two-piece, cope and drag molds are used. The process is similar to investment casting in that it uses a ceramic mold material rather than sand or plaster, so that steel and alloys with high melting temperatures can be cast (whereas plaster molds are limited to non-ferrous materials having lower melting temperatures.). The pattern is not expended as in investment casting; normally a precision made, re-usable wood or metal pattern is used. The first step in the process is to pour a thick slurry of ceramic mold material around the pattern, which incorporates gates and risers and is mounted on a match plate. Fine-grain zircon and calcined, high-alumina mullite are commonly used refractory mold materials. The pattern is removed after the mold material gels but before it sets completely. This prevents bonding of the mold to the pattern. The other mold half is made similarly, and when both halves have set, they are assembled. The assembled mold is fired at approximately 1800°F (980°C) and is filled with molten metal while still hot. Castings can be considerably larger than typical investment castings but have the advantages of a fine surface finish, sharp detail, and high dimensional accuracy, except that dimensions across the parting line require somewhat greater tolerances. A disadvantage of the process is the high cost of the ceramic material, which is expended in the process. Ceramic molds are used for dies and die parts, cast from tool steel, to eliminate much of the machining that otherwise would be required of these difficult-to-machine alloys. Die casting and forging dies, thread rolling dies, injection molds for plastics, stamping dies, and cutting tools are cast in ceramic molds. Parts cast by this method include components for aircraft, chemical processing, and food equipment, using stainless steel, and many parts for marine and architectural applications made from copper alloys. Cast iron, ductile iron, aluminum, nickel, cobalt alloys, and titanium are also cast in ceramic molds.

C2. ***ceramic-shell process*** - To reduce the cost of the mold, with its loss of ceramic material, the ceramic mold process can be modified to make only a facing layer of ceramic around the pattern, with the balance of the mold made up of less expensive fireclay. This approach is used when the castings are large and a conventional ceramic mold would be too expensive. The Shaw and Unicast processes, described below, are two of several methods that can be used to make ceramic-shell molds.

C3. ***Shaw process*** - is a ceramic mold process that uses two different types of molds: 1), an all-ceramic mold with a process quite similar to that described above and used primarily for small castings and 2), a mold consisting of a ceramic facing 3/32 to 3/8 in (2.3 to 9.3 mm) thick, backed up by a larger amount of inexpensive fireclay. The economics of the use of ceramic material limits the size of castings in the first process; there are no size limitations to the second process. Both process variations produce castings with fine detail, smooth surface finishes, fine grain, and a high level of soundness and accuracy. Both approaches use a variety of mixes of refractory powders and a liquid carrier of hydrolyzed ethyl silicate in a proprietary formulation. These materials are mixed with a gelling agent to produce a slurry that can be poured over the pattern to produce a cope or drag.

In the all-ceramic approach, the slurry of refractory material with hydrolyzed ethyl silicate is poured over the mold pattern, which can be wood, metal or plaster. The mold is stripped from the pattern when the material has gelled but before it is fully set, as in regular ceramic molding. The mold, at this point, is quite rubbery, so some undercuts and back drafts are feasible. The volatile materials in the mold are burned off by torch heating before the mold is baked in a furnace for four to five hours. The burning operation produces microcrazing in the cavity surface, which allows the gases and air to escape without being large enough to allow the molten metal to penetrate. The resulting mold is strong enough to withstand the expansion forces from hot molten metal while still being sufficiently porous. The molds may be preheated before pouring. They can be filled gradually so that turbulence is avoided, improving the structure of the casting.

The composite mold process uses four patterns if the cavity extends into both the cope and the drag. Two of these patterns are oversized and are used to form the backup material for the cope and drag. The other two are sized for the casting dimensions and are used to produce the ceramic facing. The backup is formed by ramming or vibrating the fireclay mixture over the backup pattern. (In some arrangements, only one pair of patterns is needed; a felt or flexible plastic sheet is placed over the facing pattern, equal in thickness to the ceramic facing, so that the fireclay backup can be formed.) Both the facing and backup patterns include locating members so that both halves of both mold portions can be assembled in correct alignment. The backup mold portions are hardened by placing them in bell jars and diffusing carbon dioxide gas through them for about 20 seconds. The facing mold portion is formed by pouring the ceramic slurry through a pouring channel in the backup and over the casting pattern, in the gap between the pattern and the backup. Fig. 1C3 illustrates the arrangement. Gravity pouring of the slurry is used but a vacuum chamber can be employed to remove trapped air if the casting details are critical. When the material gels after 2 or 3 minutes, the mold is stripped from the pattern. As with the all-ceramic molds, the flexibility of the mold at that stage allows it to be stripped from the pattern even if there are mild undercuts. The composite mold is then subjected to torch heat, which ignites and burns off the volatile materials. The mold halves are then assembled.

C4. ***Unicast process***[1] - is similar to the Shaw process. It differs primarily in the treatment of the ceramic material (in both the all-ceramic and ceramic-facing alternatives) after it has gelled but before setting is complete. In the Shaw process, alcohol in the ceramic mold material is burned off before microscopic cracks in the mold surface, which are desirable if kept small, can become

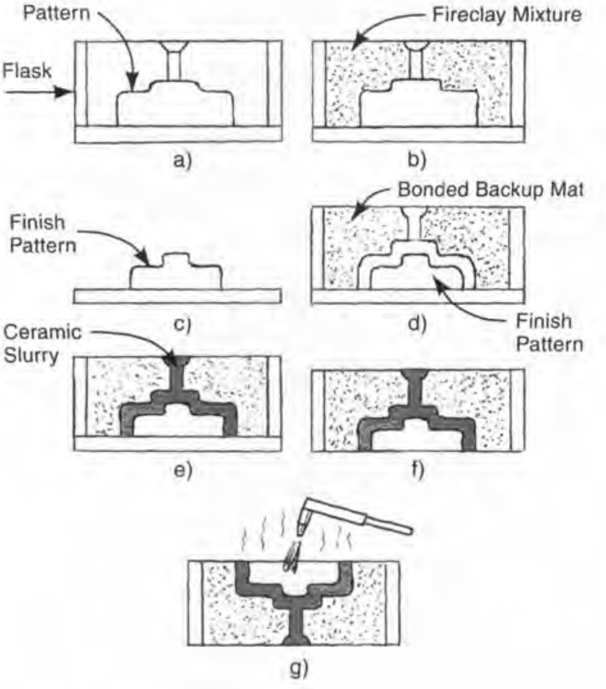

Fig. 1C3 The Shaw process for making composite molds. Two patterns are used, one to form the finish cavity, the other to form a somewhat larger cavity. The ceramic slurry poured between the larger cavity and the finish mold forms a ceramic shell suitable for accurate castings of many materials. a) The pattern for the backup material is placed in a flask. b) A fireclay mixture is introduced to the flask and is compacted by ramming or vibration. Containing sodium silicate, the mixture is bonded by gassing with carbon dioxide. c) The finish pattern on a pattern plate. d) The finish pattern and the bonded backup material are assembled in the same flask. e) Ceramic material in slurry form is poured into the opening between the backup material and the finish pattern. f) The finish pattern is removed. g) The mold half is inverted and heated by torch to burn off volatiles. Two mold halves, thus formed, are assembled together and are ready for pouring.

excessive or too large. In the Unicast process, the alcohol is dissolved in a liquid or vapor solvent, usually by spraying the solvent on the mold for 15 or 20 minutes. Application of the solvent limits the crazing and facilitates the hardening and stabilization of the ceramic material. Following this step, the hardening is completed by heating the mold in an oven at 1800°F (980°C). The cured mold is then ready for pouring. Another difference between the Unicast and the Shaw processes is the means of making composite molds. With the Unicast process, the ceramic facing slurry is applied to the pattern first. It gels almost immediately and a slurry of backing material is poured into the flask until it is full. Thus, only a single set of patterns is required. Very fine refractory material is used in the facing mixture and extremely sharp detail can be produced in the casting. The mold is also well vented with natural porosity permitting the casting of thin sections. Iron, steel, and a variety of non-ferrous alloys are cast with the process.

C5. ***plaster mold casting*** - This process is similar to sand-mold casting except that the molds and cores are made of a type of plaster of Paris rather than packed sand. The mold is made in a metal or wooden frame that contains the pattern. A liquid mixture of about 60 percent water and 40 percent metal-casting plaster is poured over the pattern. (Metal-casting plaster includes 20 to 30 percent talc and some other ingredients to speed setting.) The mold is vibrated lightly to ensure complete mold filling. After the plaster achieves an initial set, the frame and the pattern are removed, sometimes with a vacuum assist. Cores, if any, are added and the two mold halves are assembled together. The mold is then baked at a temperature ranging from 350 to 1600 °F (175 to 870 °C) to remove moisture, including the chemically-combined water, and to improve its permeability. Pouring of molten metal takes place with the mold hot and subject to a vacuum, to further remove the water of hydration. Fig. 1C5 illustrates a typical plaster mold before it is filled.

The process is used for non-ferrous metals with a melting temperatures of 2000°F (1100°C) or below. Aluminum, magnesium, zinc, and copper alloys are plaster cast. Cast parts can have an excellent surface finish, fine detail, and good dimensional accuracy. Intricate parts can be cast. However, production rates are lower and costs are higher than with sand mold processes. Typical parts include valves, pistons, cylinder heads, gears, cams, handles, pump parts, rubber tire molds, and plumbing fittings.

C5a. ***foamed plaster mold casting***[1] - is conventional plaster mold casting with a foaming

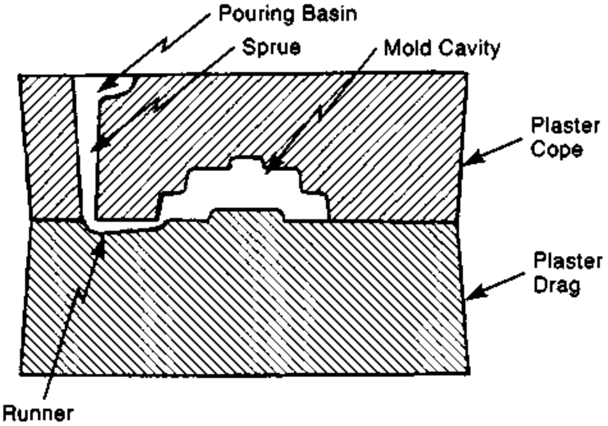

Fig. 1C5 A typical plaster mold before it is filled.

agent added to the plaster mix. The foaming, after the mold is completed, results in a permeable mold since the air cells tend to connect during the mold drying operation, providing an escape path for any gases generated during casting. The process differs from conventional plaster mold casting in that the foaming agent is added to either the dry plaster mix or to the slurry and there is intense mixing of the slurry. Proper mixing insures that the air cells are fine, no larger than about 0.01 in (0.25 mm) in diameter. Small air cells provide a mold surface that is smooth and strong enough to withstand the casting pressure. Otherwise the casting surface smoothness would suffer. The ideal amount of foaming produces 50 to 100 percent of volume increase. Drying of the foamed plaster molds before casting is done at the lower range of temperatures normally used for plaster molds because the insulating properties of the foam can result in cracking if the outer portions of the mold are overheated. Aluminum-magnesium alloys are most suitable for the process, but all-aluminum casting alloys can also be cast.

D. Permanent Mold Processes

D1. ***permanent mold casting*** - Permanent mold casting involves the use of reusable metal molds instead of the single-use molds of sand, ceramic, or plaster. The mold halves are usually hinged or mechanically guided together to permit quicker mold assembly. Filling with molten metal is by gravity. The process, then, falls between sand-mold and die casting. Molds are usually made of cast iron and are given a coating up to 0.12–0.03 in (0.30–0.75 mm) of refractory, suspended in liquid to prevent overly-fast cooling of the casting and to protect the mold surface. Powdered graphite is also sprinkled on the mold surface every few shots to facilitate release of the casting from the mold. The process is most practical for metals that melt at lower temperatures. Aluminum, magnesium, and copper-based alloys are the ones most frequently cast. Steel and iron can be cast in metal molds of suitable high-temperature alloys but this method is less common. Graphite molds are sometimes used, but they do not have a long life. Sand or metal cores may be used, depending on the shape required. (When sand cores are used with metal permanent molds, the process is known as *semi-permanent mold casting.*)

Molds are usually preheated before pouring and water cooled after pouring. Since the metal molds are not porous, small vent holes or channels to release displaced air and gases are usually incorporated in the molds. The process provides surface finishes and dimensional accuracy superior to those of sand-mold casting and denser structures than die casting. It is most suitable when shapes are not highly intricate. Since pressure is not used to force metal into the mold cavities, wall thickness must be greater than that used in die castings, typically 1/4 inch (6.3 mm) or greater. Fig. 1D1 illustrates a typical permanent mold ready for casting. Typical parts cast by this method are: automotive pistons,

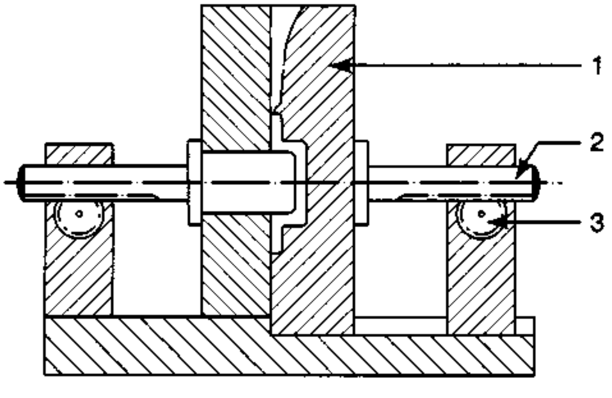

Fig. 1D1 A typical permanent mold. 1) movable mold half, 2) rack gear, 3) pinion gear. (*from Davidson, Handbook of Precision Engineering, McGraw-Hill, New York*)

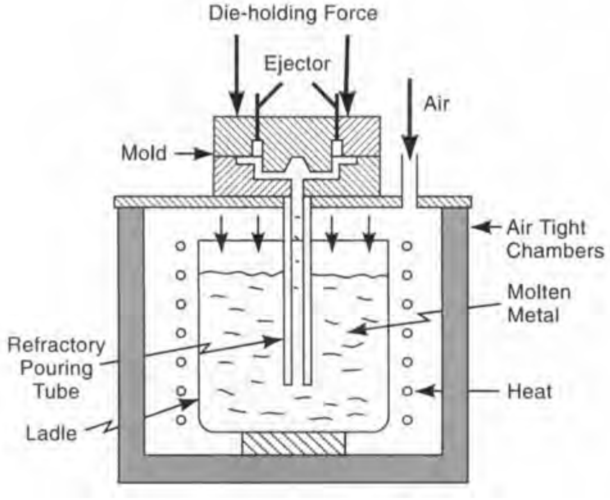

Fig. 1D2 Schematic view of low-pressure permanent mold casting. Air pressure forces the molten metal to flow upward against gravity and fill the mold. *(from Schey, Introduction to Manufacturing Processes, McGraw-Hill, New York, 1987)*

waffle irons, wheels, electric irons, pipe fittings, and gear housings.

D2. ***low pressure permanent mold casting*** - uses gas pressure to fill the mold and is a step more sophisticated than conventional permanent mold casting which uses gravity. Fig. 1D2 illustrates the low-pressure permanent mold process (LPPM). Gas pressure of about 5 to 15 lbf/in^2 (35 to 100 kPa) admitted to the chamber above the molten metal, forces the metal up through a filler tube and into the mold cavity. This approach provides a dross-free filling of the mold since the metal entering the mold comes from beneath the surface and is not in contact with the atmosphere. The method also can provide a highly controlled, non-turbulent, fill rate because the air pressure in the chamber can be controlled. A vacuum may be applied to the mold to ensure more complete filling. The process is suitable to higher production levels and produces high-quality castings. With graphite molds, the process can be used to produce ferrous castings.

D3. ***slush casting*** - This process is used for hollow objects of zinc-, lead- or tin-based alloys. It does not require a core. The molten metal is poured into a permanent mold and retained there long enough so that a shell of solidified metal coats the mold walls. The mold is inverted before all the metal has solidified. The still-liquid metal in the interior of the mold flows out and is returned to the melting pot. The mold is then opened and the casting removed. The process is suitable only for components whose interior dimensions are not critical, since the interior surface is irregular and rough. Statues, lamp bases, and other decorative objects are cast with this method.

D4. ***pressed casting*** - is similar to slush casting. The permanent mold is partly filled with a metered amount of molten metal. A closely-fitting core member is inserted into the molten metal, displacing it and pressurizing it enough to make it flow into the remainder of the mold cavity. When the molten metal has cooled and solidified, the core is immediately retracted, leaving a hollow casting. The process is used for components similar to those produced by slush casting but differs in that the inner cavity of the casting has controlled dimensions. As with slush casting, the process is used in the manufacture of ornamental objects.

D5. ***vacuum casting*** - is another permanent mold process, chiefly used for casting ingots, though parts can be cast also. Melting, reducing, and casting all take place in the same vacuum chamber, which contains the mechanisms necessary to transfer the molten metal from the melting pot to the mold. Centrifugal force may be applied to the molds if required by the nature of the part being cast. The vacuum prevents atmospheric contamination of the alloy and removes any entrapped gases. Induction is the most common heating method for melting but electric arc, electron beam, and plasma arc are also used. Vacuum chamber pressures are on the order of 10 μm. Vacuum casting is used for various alloys including those that are to be forged. Titanium requires a vacuum process when it is cast.

E. Centrifugal Casting

All centrifugal casting processes utilize rotation of the mold about a central axis and the resultant centrifugal force to drive the molten metal in the

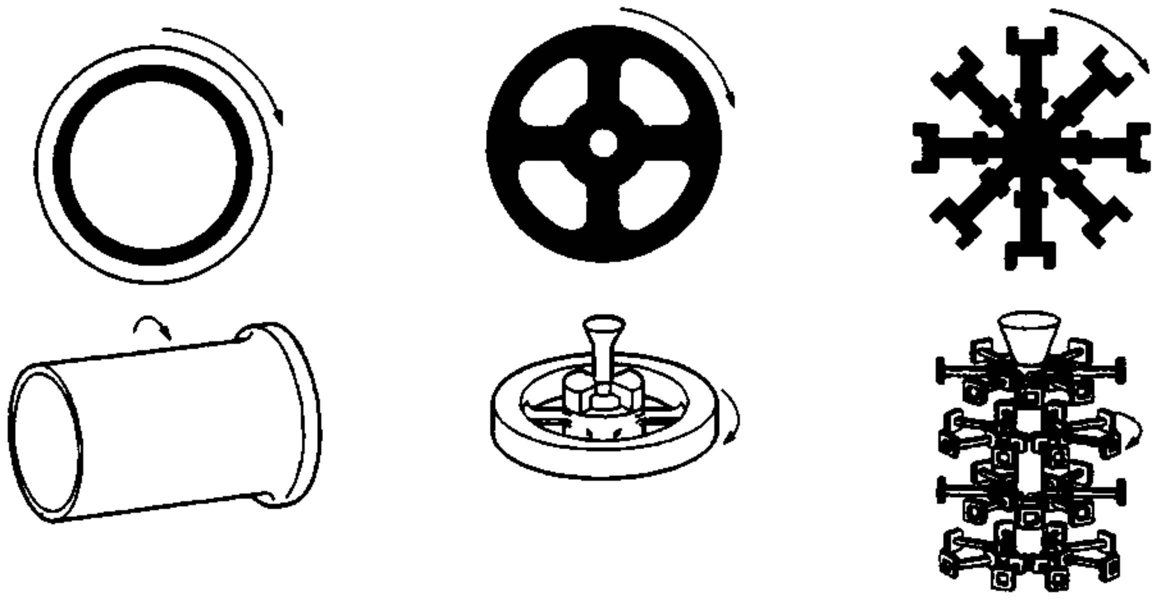

Fig. 1E Three types of centrifugal castings. (a) true centrifugal (b) semi-centrifugal, (c) centrifuging. *(from David C. Ekey and Wesley P. Winter, Introduction to Foundry Technology, McGraw-Hill, New York)*

desired portion of the mold. The cast metal is then relatively dense. Slag and other impurities cluster near the central axis and can be disposed of or removed more easily. Fig. 1E illustrates three common processes.

E1. ***true centrifugal casting*** - is used to manufacture piping, specialty tubing, cylinder liners, and other cast objects of cylindrical shape. Centrifugal force holds the molten metal against the outer walls of the rotating mold. The volume of metal in the mold determines the wall thickness and internal diameter of the part. No core is used except to form the bell ends of cast pipe. The mold is made of metal but may be sand-lined. If sand is employed, one of a number of binders may be utilized. Graphite is also used for some molds. The pouring spout may move axially as the mold rotates, providing a helical path to the flow of liquid metal. As the mold continues to rotate, the molten metal spreads evenly on the mold surface and solidifies. The rotation of the mold produces centrifugal force up to 100 times the force of gravity, the amount being partially dependent on the angle of orientation of the axis. The inner surface of the casting tends to collect dross and other impurities. Fig. 1E, view a), and Fig. 1E1 illustrate the process.

E2. ***semicentrifugal casting*** - In this process, parts that have a symmetrical shape around a central axis are cast, including wheels, gear blanks, nozzles, and similar parts. (See Fig. 1E, view b.) The rotational speed of the mold is less than that used in true centrifugal casting. Several molds may be stacked on the same axis and all filled from the same pouring source. A core may be used for the center hole, if any, or the sprue may be left in the center of the casting. In either case, the hole is machined to provide the necessary accuracy and surface finish. The outer portion of the casting has a dense structure.

E3. ***centrifuged casting*** - This process is used for smaller, intricate parts. Centrifugal force provides the pressure that ensures complete filling of the mold cavities. Molds are located radially about a central sprue or riser, which acts as the axis of rotation. Rotation can be about a vertical or horizontal

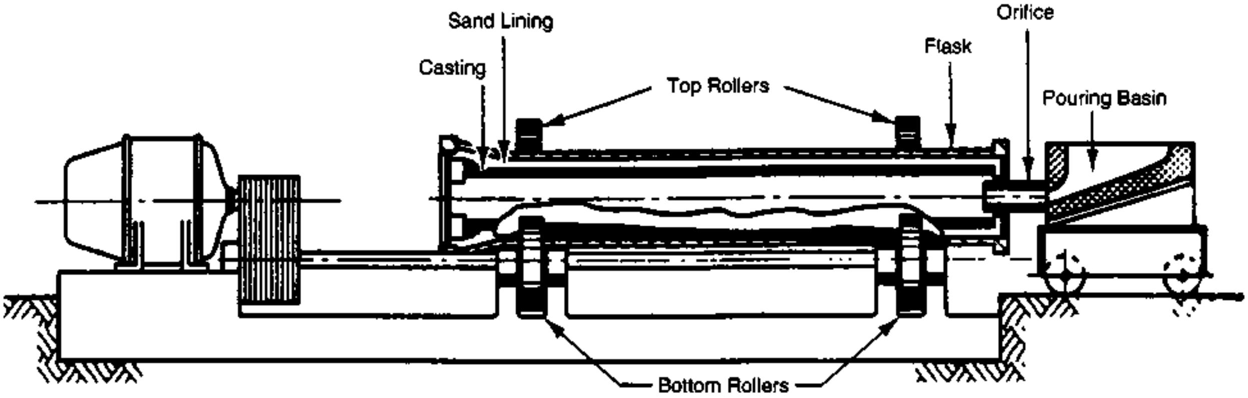

Fig. 1E1 A horizontal centrifugal casting machine equipped to make cast iron pipe. (*Courtesy American Cast Iron Pipe Company*)

axis and is at a relatively low rotational speed. Fluid pressure of the molten metal is proportional to its distance from the axis and the square of the speed of rotation. Molds may be stacked as shown in Fig. 1E, view c). Casting shapes that otherwise might present feeding problems can be cast with this process. Small caps and brackets, and dental inlays are among the components cast.

F. Die Casting

Die casting is a permanent mold casting process wherein the molten metal is forced into the mold at high velocity and under high pressure. That pressure is maintained until the metal solidifies. The molds, referred to as "dies", are water-cooled and are usually made from a hardened steel alloy that can withstand the pressure and heat of the process. Dies are in two halves and often have side cores if the part shape includes undercuts. These cores are actuated by cams, gears, or separate hydraulic cylinders. The dies are usually lubricated for each cycle prior to the clamping of the two halves together. The lubricant may be accompanied by water to cool the die and compressed air to remove any extraneous metal pieces that may remain on the die. Pneumatic, hydraulic, or mechanical force is used to close the die halves and to actuate the plunger that moves the molten metal into the die cavity. Because die filling is very rapid, some air may be trapped in the die cavity and result in some porosity in the casting. This porosity is normally limited to the interior of the casting, but surfaces tend to be dense. Vents and small overflow wells are incorporated in the die to allow trapped air and excess metal to escape. After the casting metal solidifies, the die halves part and ejector pins remove the workpiece. Cycle times range from just a few seconds for small zinc parts to 30 or 40 seconds for larger aluminum parts. The maximum practical casting size is about 40 lb (18 kg). A trimming operation is frequently needed after casting to remove flash, sprues, and overflow material. Although some ferrous die casting is being done, the process is primarily limited to non-ferrous alloys. Zinc, aluminum, magnesium, tin, and lead alloys are most commonly cast. Some die casting of copper-based alloys also takes place. The high-velocity filling of the dies permits the production of thin-walled and intricately shaped parts. Close tolerances can be held and post-casting machining is normally less than that required after other casting processes. Because the cost of equipment and tooling are high, the process is most suited to high-production conditions. Typical die cast parts are used in appliances, automobiles, hand tools, and builder's hardware.

F1. ***hot-chamber die casting*** - In this process, the plunger that forces the molten metal into the die is immersed in the molten metal at all times. Fig. 1F1 shows the "gooseneck" configuration of the plunger and injection channel. Prior to injection, molten metal is allowed to flow by gravity into the injection cylinder. The plunger is then actuated by either

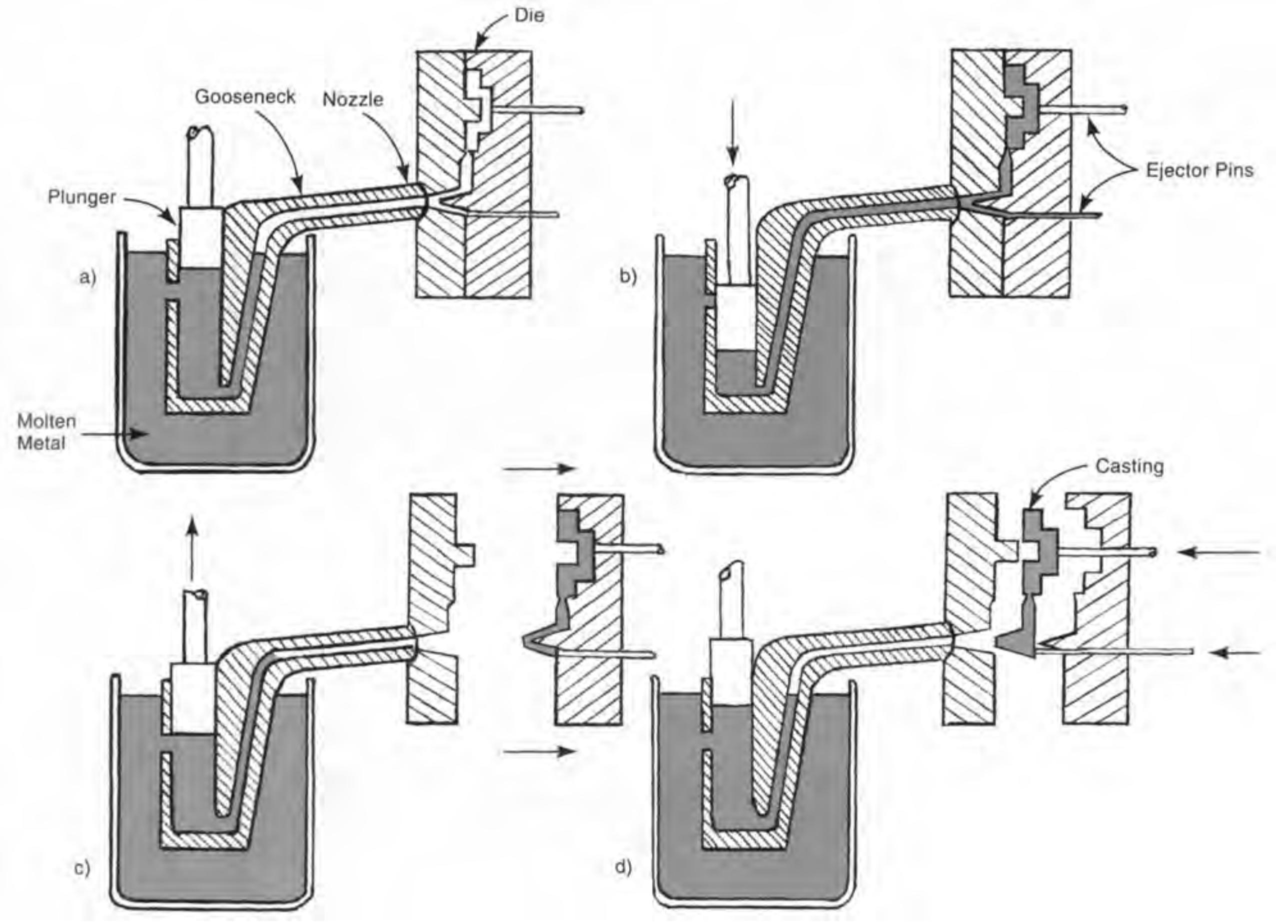

Fig. 1F1 Hot-chamber die-casting. a) The die is closed and the hot chamber (at the gooseneck) is filled with molten metal. b) The plunger descends and forces molten metal through the gooseneck and nozzle and into the die cavity. Metal is held under pressure until it solidifies. c) The die opens. The casting stays in the one half of the die. The plunger retracts, pulling molten metal back through the nozzle and gooseneck. d) Ejector pins push the casting out of the die. As the plunger uncovers the inlet, molten metal refills the hot chamber for the next cycle.

mechanical or pneumatic force to move the molten metal into the die. (There is no external transfer of molten material to the injection cylinder.) The cycle is automatic and, with small parts, can often repeat as fast as every 4 or 5 seconds. However, the constant contact of the injection equipment with molten metal causes difficulties with aluminum and other higher melting temperature alloys which attack the steel components of the injection system. As a result, hot-chamber die casting is used mainly with zinc, tin, lead, and, more recently, magnesium alloys.

F2. ***cold-chamber die casting*** - In this process, as illustrated in Fig. 1F2, molten metal is ladled into the horizontal injection cylinder from a separate melting and holding pot so that the metal contacts the injection mechanism only during the injection portion of the cycle. After ladling, the metal is immediately injected into the die and, as in the hot-chamber method, is held under pressure during solidification. This approach is not quite as rapid as hot-chamber die casting but nevertheless still provides high productivity. The process is used with aluminum, copper, and magnesium, which are not well suited to hot-chamber die casting because constant contact with these metals may result in short life of the injection equipment. The cold-chamber method limits the time

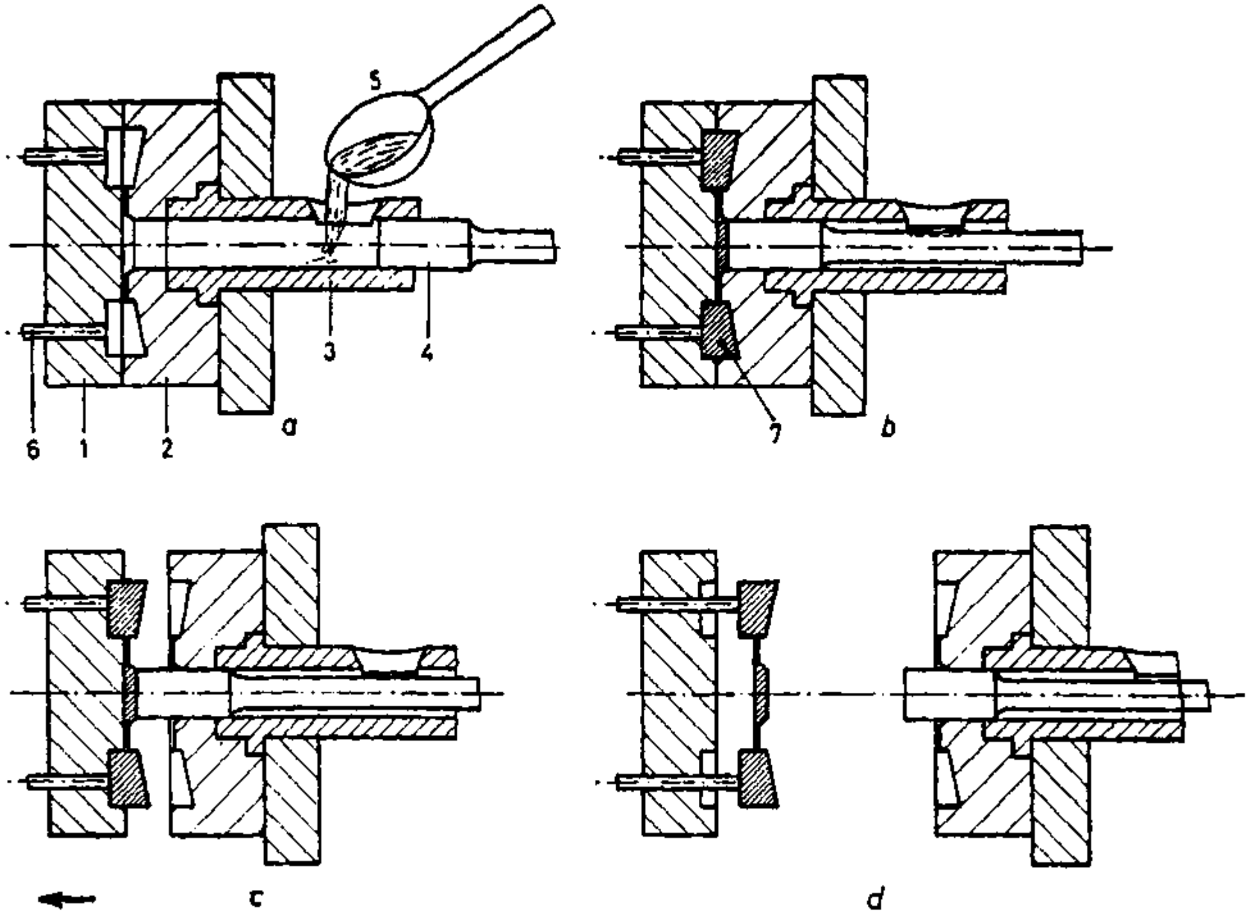

Fig. 1F2 Cold-chamber die casting. a) The mold is closed and molten metal is ladled into the injection cylinder ("cold chamber"). b) The plunger advances, forcing molten metal into the die cavity. c) The mold opens. d) The casting is ejected. Machine components: 1 - stationary die half, 2 - movable die half, 3) cold chamber, 4 - plunger, 5 - ladle, 6 - ejector pin, 7 - die casting. (from Davidson, Handbook of Precision Engineering, McGraw-Hill, New York)

of exposure of system components to the molten metal. The cold-chamber method is also used when ferrous alloys are die cast. Cold-chamber machines are of rugged construction because of the higher casting pressures needed with the alloys mentioned.

F3. ***trimming*** - of die-cast parts normally follows casting to remove flash, overflow material, gates and runners. The common method uses a hydraulic or mechanical press and a trimming die, made to fit the outline shape of the part. The operation is often performed immediately after casting when the workpiece is hot and more easily sheared. Trimming can also be a manual operation but the high production normally involved with die casting also justifies the use of dedicated tooling and production equipment. Grinding may also be employed in trimming operations.

F4. ***impregnation of die castings*** - is another operation that may follow die casting if the product application requires pressure tightness. The die casting is impregnated with organic material or sodium silicate to fill any pores that could affect the ability of the parts to hold pressure. The impregnation process involves the following steps: cleaning, placement of the workpieces in a suitable vacuum chamber, drawing of a vacuum in the chamber, introduction of the sealant to the chamber, pressure in the chamber to drive the sealant into any pores that exist on the workpiece, removal of the castings from the chamber, heating or baking to cure the impregnated material, if necessary, and washing and drying.[1]

G. Investment Casting (Lost Wax Process)

This process uses a one-piece mold made of ceramic material, the same material that is used in ceramic casting. The mold is made by surrounding an expendable wax, plastic, or frozen mercury pattern with the ceramic material in slurry form. When the mold material solidifies it is heated and the wax, plastic, or mercury replica of the part is melted out, leaving a cavity corresponding to the shape of the desired part. The mold is baked to remove all residues of the pattern and to fuse the ceramic. Molten metal is poured into this cavity. When the metal solidifies, the ceramic mold is broken free and removed from the casting. There are two basic variations of this process, the *flask, solid mold* or *monolithic method* which uses a metal flask to hold a solid mass of the ceramic mold material, and the *shell method* in which a thin (about 1/4 in - 6 mm) shell of ceramic without a flask surrounds the pattern. Investment casting is used extensively for intricate, usually small, precise parts of high strength alloys. Turbine blades, sewing machine and gun parts, valve bodies, wrench sockets, and gears are typical parts. Larger parts are also now produced weighing up to about 80 lb (35 Kg) per casting.

G1. ***flask method*** - The sequence for the simpler, but much less used, flask method is as follows:

1. The wax or plastic patterns are injection molded, often in a low-cost nonferrous mold.
2. A number of patterns are assembled together on a "tree" of the same wax or plastic so that a number of parts can be cast at one time. The tree consists of a central sprue and branch runners to which are attached the individual patterns.
3. The "tree" is precoated by dipping it in a slurry of refractory material and then is dried thoroughly.
4. The tree is inserted in a flask and investment material is poured around it. The worktable is usually vibrated to settle the investment material and drive out air pockets. The investment material is allowed to set and then air dry for six to eight hours.
5. The flask is inverted and placed in an oven to melt out the wax or plastic. Typically temperatures of about 375°F (190°C) are used for about 12 hours.
6. The flask is heated gradually, then held at about 1800°F (980°C) for about 4 hours to melt and "burn out" the wax or plastic residue and to fuse the investment material.
7. Molten metal is poured into the mold cavity. Gravity is the prime filling method but air pressure and centrifugal force may also be used. The metal cools and solidifies.
8. Shake-out takes place. The casting in "tree" form is removed from the flask and the investment material is broken away from it.
9. The tree is descaled by immersion for 10 to 15 min in a molten salt bath at 1100°F (600°C) followed immediately by a cold water dip and cleaning and neutralizing immersions.
10. The parts are cut from the tree.
11. Gates and runners are removed from the castings by abrasive or other machining methods. Fig. 1G1 illustrates the mold making portion of this process.

G2. ***shell method*** - This method has a very similar sequence to that of the flask method. The chief difference is that, instead of pouring a solid mass of investment material around the thinly-coated tree pattern, it is coated with a series of dip coats of ceramic slurry until the desired thickness of shell is built up. This thickness is usually about 1/4 in (6.3mm), and no flask is then required. About six or seven dips may be required, depending on the size of the part. The sequence of operations is illustrated in Fig. 1G2. The shell method has become the predominant method, though the flask method may give somewhat better surface definition to the casting since the molten metal cools more slowly. Less surface decarburization occurs with the shell process. It also has a shorter cycle time.

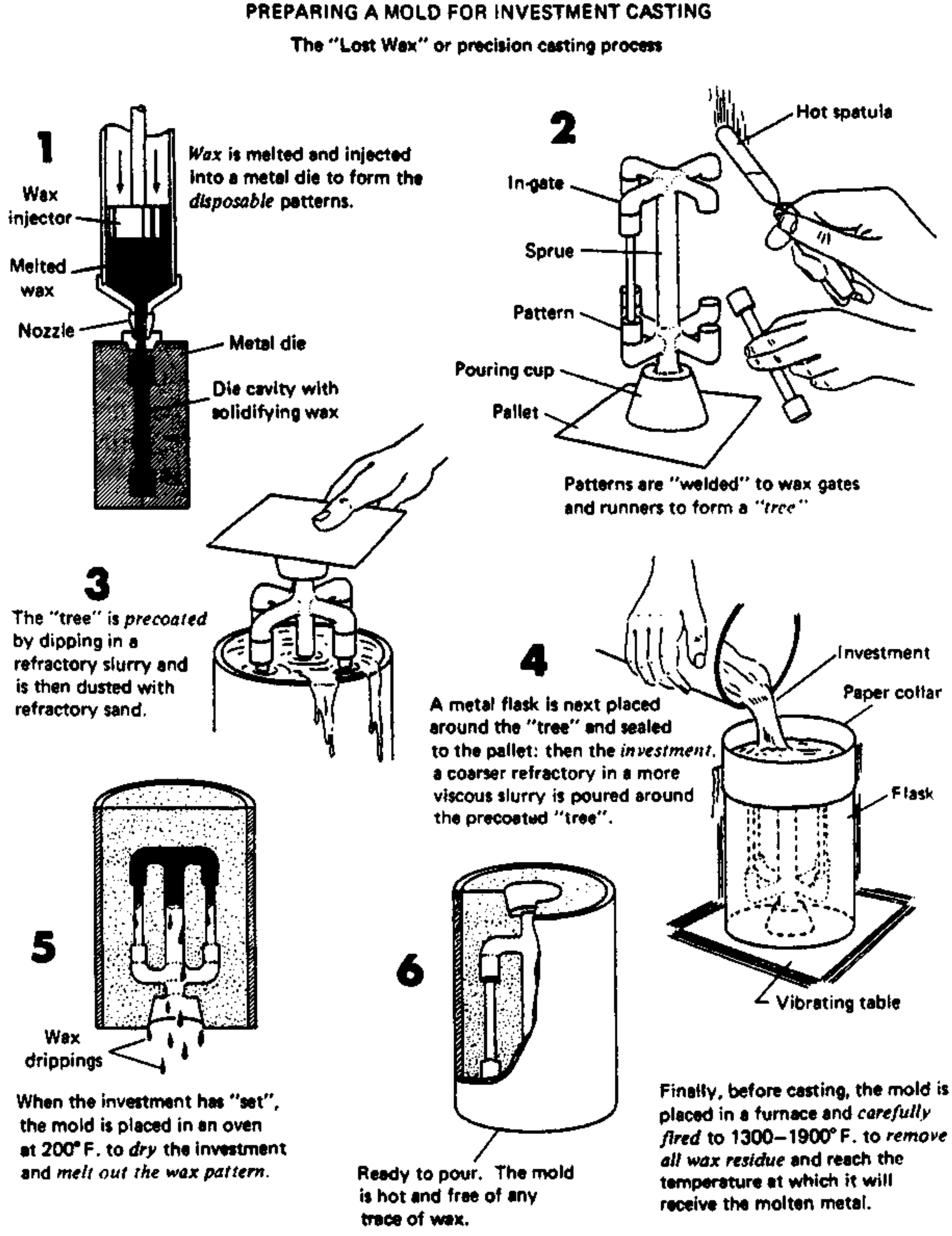

Wax is melted and injected into a metal die to form the *disposable* patterns.

Patterns are "welded" to wax gates and runners to form a *"tree"*

The "tree" is *precoated* by dipping in a refractory slurry and is then dusted with refractory sand.

A metal flask is next placed around the "tree" and sealed to the pallet: then the *investment*, a coarser refractory in a more viscous slurry is poured around the precoated "tree".

When the investment has "set", the mold is placed in an oven at 200° F. to *dry* the investment and *melt out the wax pattern.*

Ready to pour. The mold is hot and free of any trace of wax.

Finally, before casting, the mold is placed in a furnace and *carefully fired* to 1300–1900° F. to *remove all wax residue* and reach the temperature at which it will receive the molten metal.

Fig. 1G1 The process for making a mold for the flask method of investment casting. (*from Niebel and Draper, Product Design and Process Engineering, McGraw-Hill, 1974, New York*)

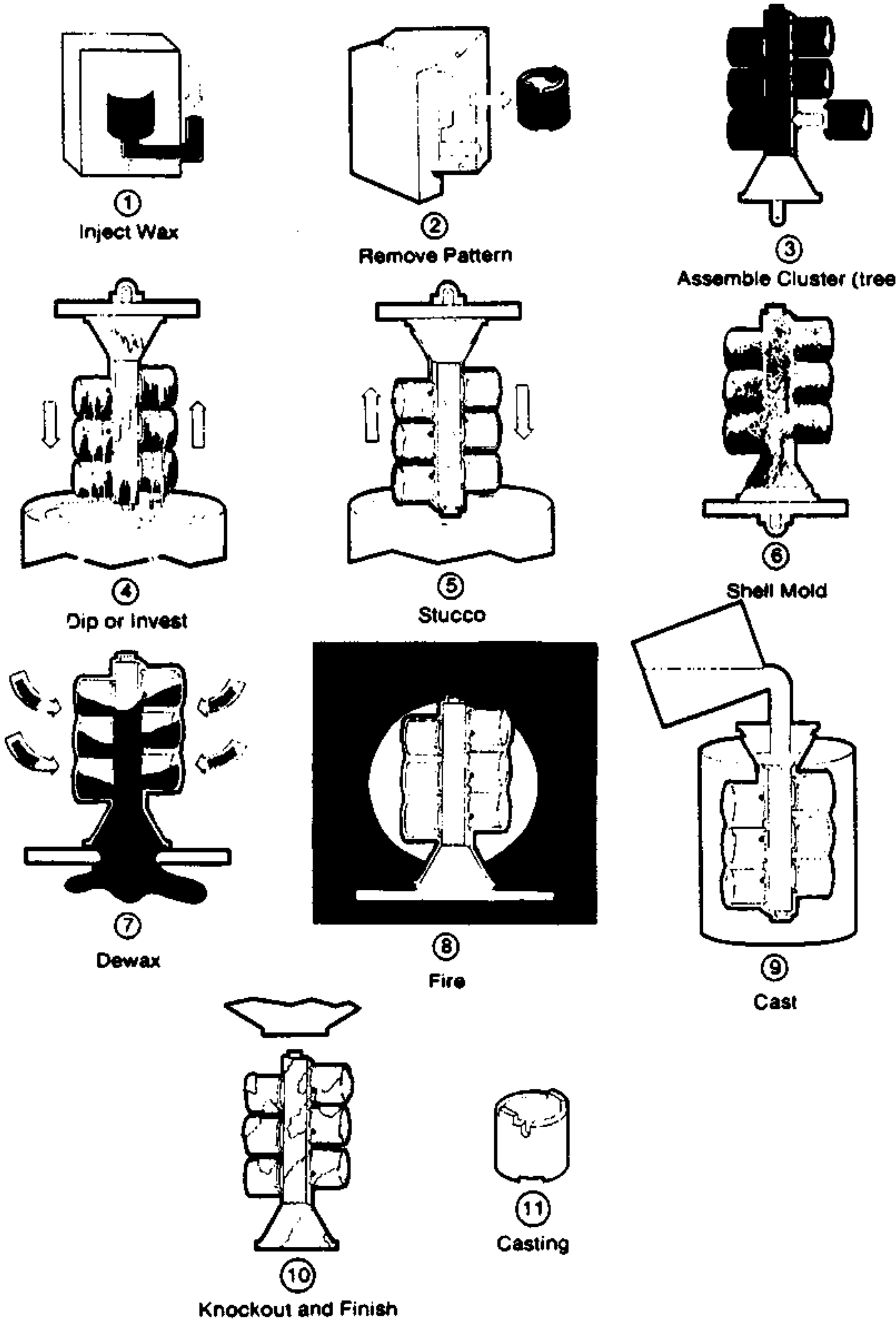

Fig. 1G2 A typical sequence of steps for the shell method of investment casting. (*Courtesy Investment Casting Institute, Dallas*)

H. Continuous Casting

Continuous casting is primarily a mill method for producing ingots, rather than discrete cast parts, but it is used for producing some long parts of constant cross section such as piping or tubing. The method solves certain quality difficulties that are more prevalent with conventional ingot casting and is more cost effective for mill-quantity production. The molten metal is continuously solidified as it is poured and its length is not determined by the length of the mold but by the length of time that the pouring and solidifying continues. The mold position is most commonly vertical with an open top and bottom. The material flows downward through the mold, which shapes it. As it starts to solidify and exit the bottom of the mold, space is created for additional molten metal at the top. Fig. 1H illustrates a typical arrangement.

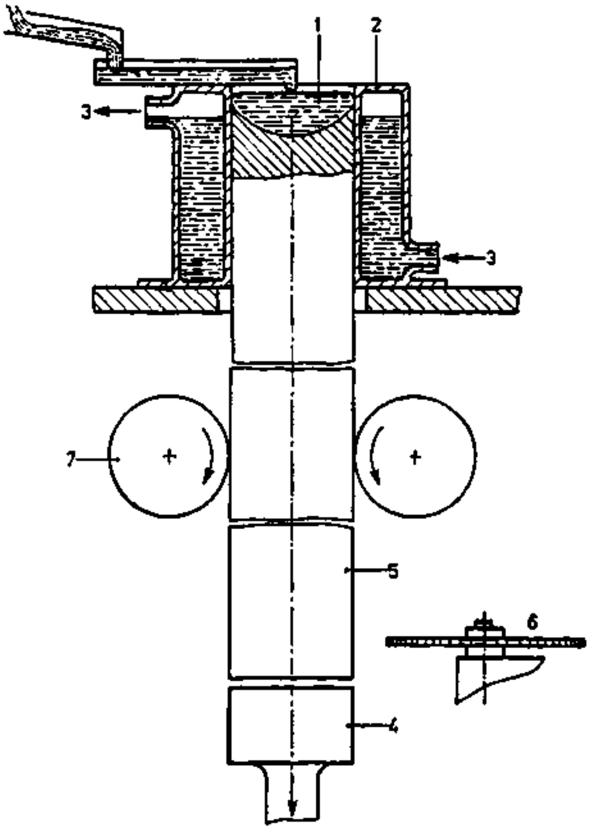

Fig. 1H Continuous casting of a solid bar with a vertical continuous casting machine. 1) molten metal, 2) water-cooled mold, 3) cooling water inlet and outlet, 4) (not shown) movable mold base which descends at a controlled rate to start the operation, 5) cast bar, 6) flying cutoff saw, 7) rollers to control movement of the cast bar. (from Davidson, Handbook of Precision Engineering, McGraw-Hill, New York)

The casting sequence is as follows:[1] 1) molten metal is delivered to the casting equipment. 2) The metal flows from a tundish (temporary container) into the mold; flow is controlled by a suitable stopper or slide gate valve. 3) The molten metal cools and partially solidifies as it passes through the water-cooled mold (which is often made from copper); the mold oscillates and is lubricated to prevent the casting from adhering to it. (When casting aluminum, air pressure and an electromagnetic field may be used to keep the metal from contacting and adhering to the mold.) 4) The section is supported and guided below the mold by opposed rolls that contact the cast section whose surface is solid but whose interior may still be molten; water spraying provides further cooling action. 5) The opposed rollers withdraw the solid cast section to a station where it is cut to length by flame cutting or a shear. It may, alternatively, be reheated and rolled before being cut to length. First utilized in the production of primary non-ferrous metals, this method is now used extensively in steel production as well. Non-ferrous metals are continuously cast as tubing and other special shapes; steel is more difficult to cast into special shapes.

References

1. *ASM Handbook, Vol. 15, 9th edition,* ASM International, Metals Park, OH, 1988.
2. *Cast Metals Technology,* J. G. Sylvia, Addison-Wesley, Reading, MA, 1972.
3. *The Foseco Foundryman's Handbook, 10th ed.,* J.R. Brown, ed., Butterworth-Heinemann Ltd., Oxford, England, 1994.
4. *Design for Manufacturability Handbook, 2nd ed.,* J.G. Bralla ed., McGraw-Hill, New York, 1998.
5. *Manufacturing Processes and Systems (9th edition),* Phillip F. Ostwald, Jairo Munoz, John Wiley and Sons, New York, 1997.
6. *Materials and Processes in Manufacturing (8th edition),* E. Paul DeGarmo, J.T. Black, Ronald A. Kohser, Prentice Hall, Upper Saddle River, NJ, 1997.
7. *Tool and Manufacturing Engineers Handbook, 4th edition,* Society of Manufacturing Engineers, Dearborn, MI, 1984.

Chapter 2 - Metal Forming Processes

A. Hot and Warm Forming Methods

(Note: Many metal forming operations can be performed with the workpiece metal either hot or cold. The operations discussed in this section are normally - but not always - performed on workpiece material that has been heated to make it more malleable for the operation involved. Metals that are to be hot formed are heated above their recrystallization temperature, one that varies with each material but is normally about 0.6 times the melting temperature on the Kelvin (absolute temperature) scale. For example, steels require a temperature above about 1800°F (980°C). Warm forming involves heating to a temperature 30 to 60 percent of the melting point, while cold forming takes place when the metal temperature is below 30% of the melting temperature[2].)

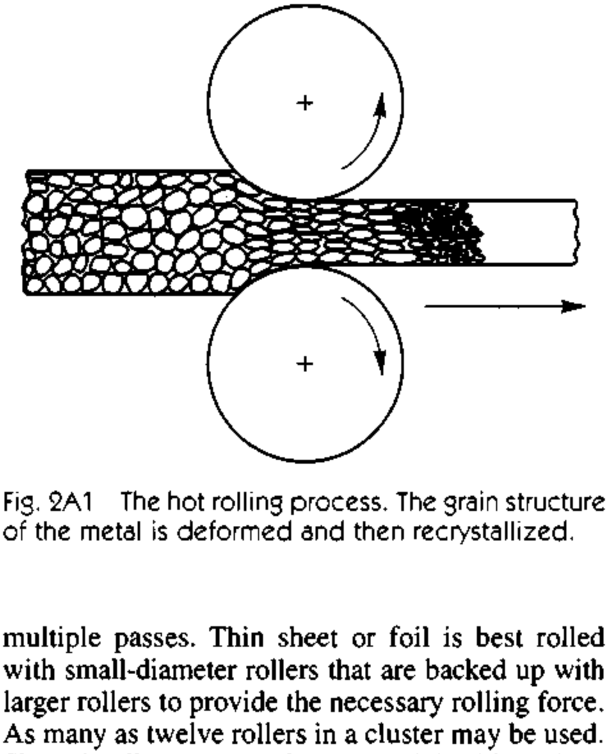

Fig. 2A1 The hot rolling process. The grain structure of the metal is deformed and then recrystallized.

A1. ***hot rolling*** - is commonly applied to convert steel ingots to blooms, billets, or slabs, and to make these shapes into salable forms. In the process, heated metal is passed between two rollers whose spacing is less than the thickness of the metal. The rotation of the rollers moves the metal forward, squeezing and elongating it. Fig. 2A1 illustrates the process. The process extends and refines the grain structure of the rolled material. A number of passes may be required, depending on the thickness desired and the thickness of the entering material. Reversing rollers are often used to facilitate multiple passes. Thin sheet or foil is best rolled with small-diameter rollers that are backed up with larger rollers to provide the necessary rolling force. As many as twelve rollers in a cluster may be used. Shaped rollers can produce material with various cross sections including those of structural shapes or special cross sections. Low-alloy or plain-carbon steel is heated to about 2200°F. (1200°C) before rolling and after being preheated in a soaking pit. In addition to ferrous metals, aluminum, copper and copper alloys, magnesium, nickel, titanium, and zinc alloys are hot rolled.

A2. ***hot drawing or cupping*** - is a process for making cup shapes of some depth (more than several times stock thickness) and thick and seamless tubes and cylinders from blooms, flat plate, or sheet. The process is similar to cold deep drawing of sheet metal (except that the material may be thinned during the operation whereas in deep drawing the material flows into the die and tends to thicken). Tubular parts can be made when the cup formed in one such operation is reheated and redrawn to a narrower diameter; then reheated and pushed through a series of draw bench dies that further reduce its diameter and extend its length. Fig. 2A2 illustrates both the cup-forming and redrawing operations. In addition to the redrawing that produces cylinders and seamless tubing, the process is used for forming relatively simple shapes, usually cylindrical, in thick material.

A3. ***extrusion*** - In this process, metal is forced through a die opening that gives it a uniform cross-sectional shape. Although the operation can be performed with many cold metals, the usual procedure is to preheat the metal to the plastic range to ease the transition. A heated ingot or billet is inserted in a chamber called a "container". A ram, normally hydraulically powered, forces the material through the die opening. As it flows through the die, the metal takes the shape of the die opening and closely conforms to its dimensions. It is quickly cooled as the metal exits the die so that the shape is maintained. Fig. 2A3 illustrates the process.

Aluminum, copper, magnesium, tin, lead, and their alloys are commonly extruded. Steel, including alloy and stainless varieties, and nickel alloys, are more difficult to extrude but can be processed by the Sejournet and related processes (See A3b below.)

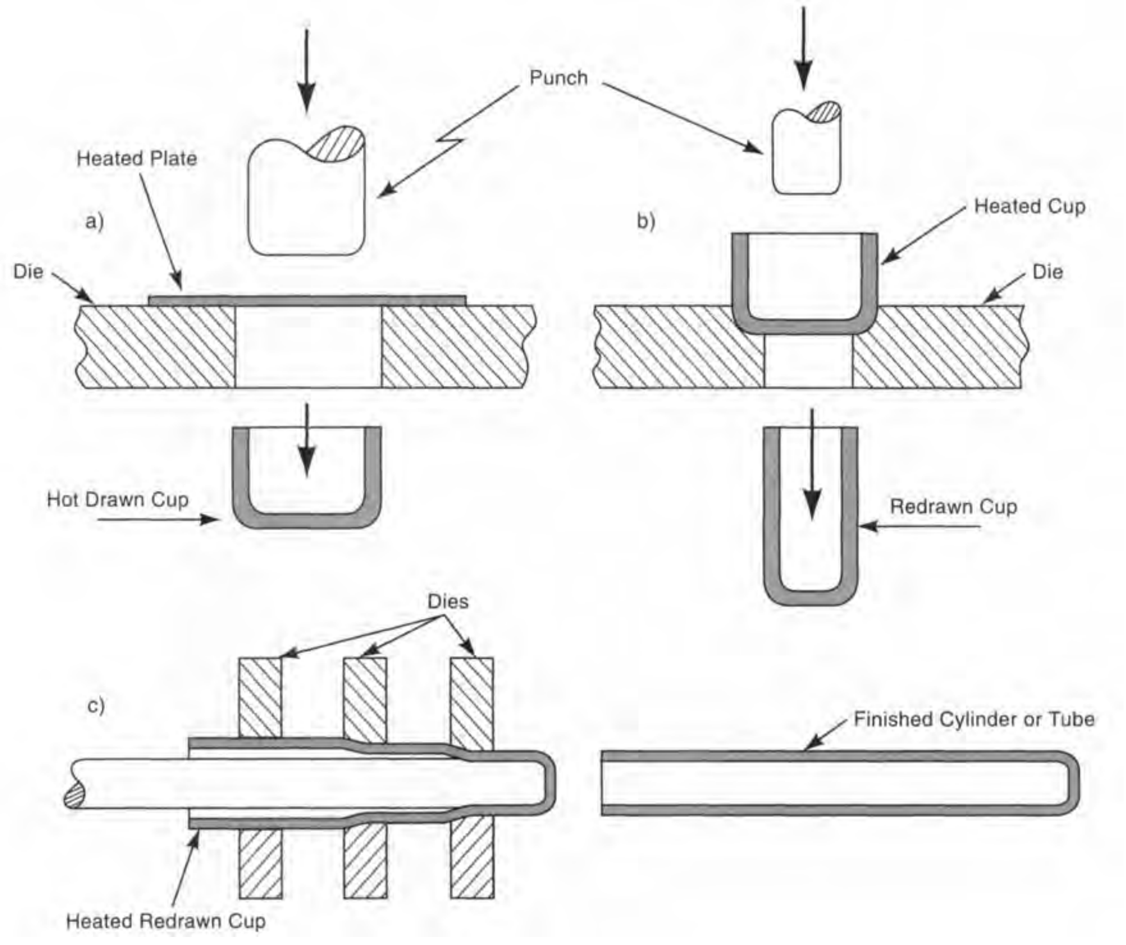

Fig. 2A2 Hot drawing or cupping. a) first draw, b) redraw, c) multiple die redrawing on drawbench.

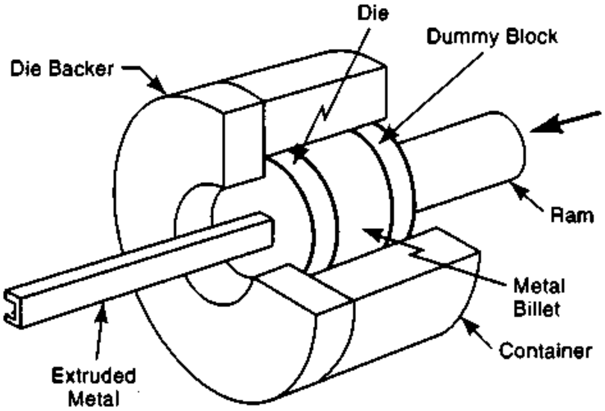

Fig. 2A3 Direct extrusion.

After extrusion, sections may be stretch-straightened to remove twist and camber that may exist. Extrusion is suitable for almost any part that has a constant cross section and is made from the above materials. A wide variety of complex shapes such as tubing and other hollow objects, door and window frame elements, ladder members, and structural sections can be extruded. A similar process is used to make like-shaped components in plastics or other materials (See chapter 4, section 4I.)

A3a. ***indirect extrusion*** - In this process variation, the ram is hollow and the metal is forced backward through a die and into the ram. Friction is reduced because the metal does not have to flow along the extrusion chamber walls, but the difficulty in supporting and removing the extrusion makes the process awkward. (See Fig. 2A3a.)

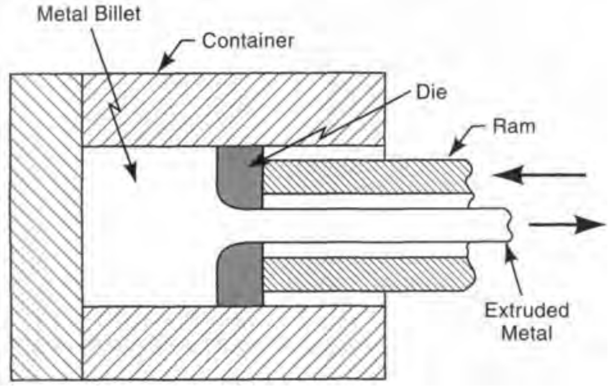

Fig. 2A3a Indirect extrusion.

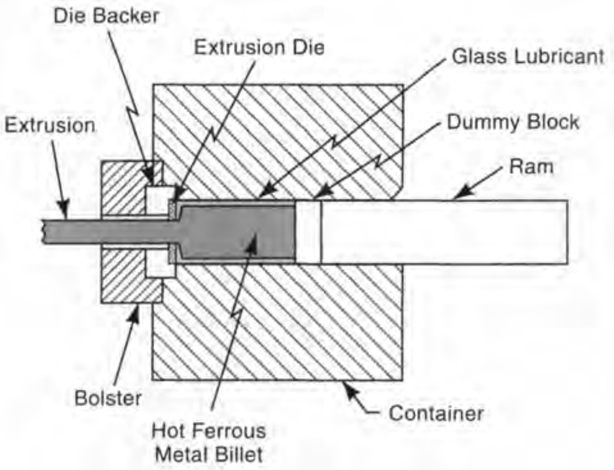

Fig. 2A3b The Sejournet process for extruding ferrous metals uses molten glass as a lubricant and insulator.

A3b. ***Sejournet process*** - is used for the extrusion of ferrous metals. The operation is the same as that for other metals except that the steel billet to be extruded is heated to the recrystallization temperature range and then coated with molten glass that lubricates and insulates the metal as it is pushed through the die. See Fig. 2A3b. The workpiece is usually stretch-straightened afterwards to remove camber and twist that may result from the process.

A4. ***forging*** - is a process in which a metal slug undergoes plastic deformation into a useful shape, usually at an elevated temperature. Repeated strokes or extended pressure may be used. The process refines the grain structure of the material and improves the physical properties of the part. Equipment capable of applying compressive forces is required. Dies are often heated to a temperature between 300 and 400°F (150 and 200°C) or higher. Metals commonly forged include steel, aluminum, magnesium, brass, bronze, copper, stainless and alloy steel. Aluminum is typically forged isothermally at a temperature of 600 to 850°F (320 to 455°C). Many machine components that require high strength are produced by forging. Examples are aircraft landing gear components and other aircraft and aircraft-engine parts, connecting rods, spindles, couplers, parts for earth moving and agricultural equipment, valve bodies, ordnance parts, gears, turbine parts, and levers.

A4a. ***open-die drop-hammer forging (hammer, flat-die, or smith forging)*** - involves repeated blows with a powered flat-faced hammer or tools of simple shape. The workpiece is not confined. Except for the powered press strokes, the operation is the same as that traditionally performed by a blacksmith in that the operator positions and orients the workpiece for each blow. The process is often a preliminary one, used to provide an initial shape prior to further forging and other operations. The process is also used for forgings that are too large for impression dies, and for small quantities and situations where time schedules do not permit the fabrication of dies. It is illustrated in Fig. 2A4a. Simple shapes such as discs, shafts, or rings, are commonly produced. Steam, compressed air, or gravity ("drop forging"), provide the necessary force. The operation can be computer controlled to reduce dependency on operator skill and to ensure more accurate workpiece dimensions.

A4b. ***impression die forging (closed die forging) (die forging)*** - differs from hammer or smith forging in that the dies are closed. There are two die halves, one of which is fastened to the ram of the forging press and the other to the machine bed. Repeated press strokes or heavy hydraulic or mechanical pressure cause the workpiece metal to flow into the die cavities, taking their shape, as shown in Fig. 2A4b. If the part is complex, several different die sets may be used before the final shape is attained. The operation produces surplus metal called "flash" around the edges of the forging. The flash cools and hardens before the balance of the forging and aids in filling the unfilled portions of the die. The flash is removed in a secondary trimming operation.

Typical metal temperatures for impression die forging per Ostwald[1] are: steel - 2000 to 2300°F, (1100 to 1250°C), copper alloys - 1400 to 1700°F (750 to 925°C), aluminum alloys - 700 to 850°F (370 to 455°C), and magnesium - 600°F (315°C). The process results in particularly strong parts per unit of weight because it produces favorable orientation of the metal grains.

A4b1 - ***drop forging*** - is impression die forging using a drop hammer. A drop hammer is a machine that uses gravity, air, or steam pressure to make repeated blows against a workpiece. With gravity drop hammers, a heavily weighted ram is lifted above the forging die and then released.

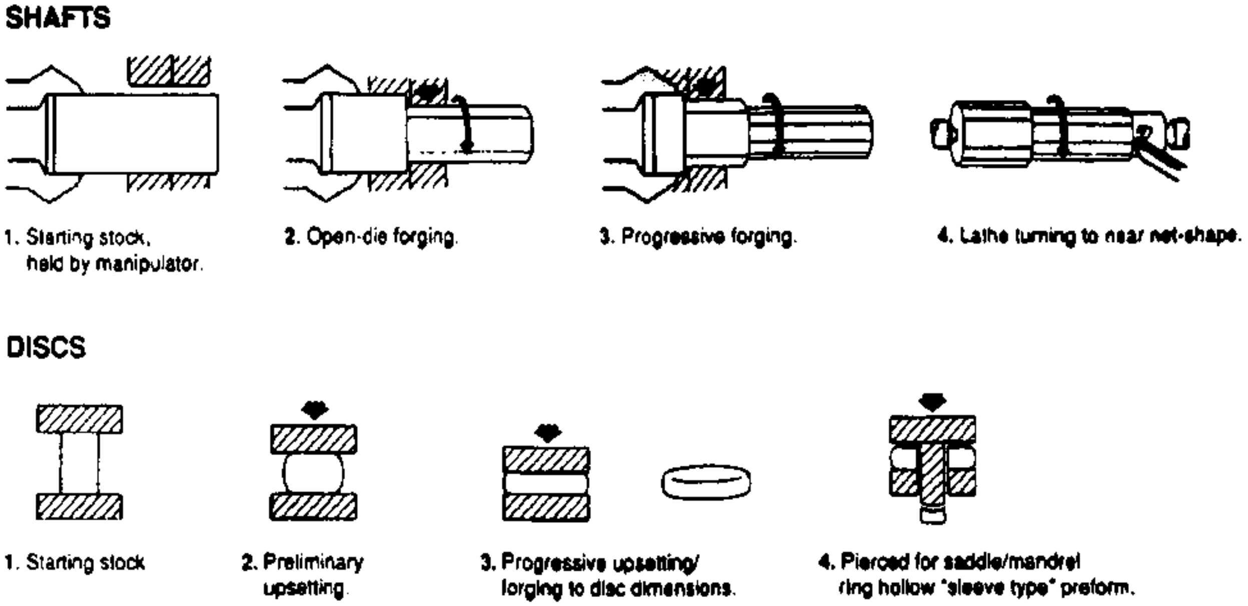

Fig. 2A4a Open-die forging of shafts and discs. Repeated press strokes with a flat or simple-shape die form the workpiece. (*Courtesy Forging Industry Association.*)

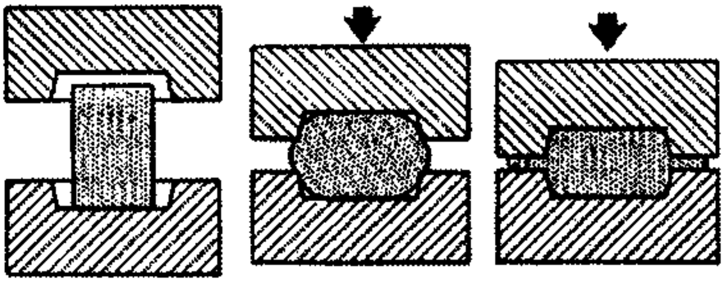

Fig. 2A4b Conventional impression-die (closed-die) forging sequence. (*Courtesy Forging Industry Association.*)

The press action is then repeated until the workpiece has attained the desired shape. Impact force aids the forging operation. Powered drop hammers use air, steam, or hydraulic pressure to add to the downward force.

A4b2 - ***precision forging*** - is a variation of impression die forging with a closely-controlled, more extensive forging process, accurately controlled blank sizes, and carefully designed dies, so that the forgings produced are close to the net shape required. The process greatly reduces the amount of post-forging machining required. This is because it can reduce side-wall draft to from 0 to 1° and permit thinner forging walls, smaller radii, and smoother surfaces. Since there is little or no machining, the grain flow patterns are not disturbed, extra metal does not have to be added to compensate, and strength-to-weight ratios are improved. A key approach in the process is to provide forging blanks of just the right size and shape with accurate and consistent dimensions. A certain amount of trial and error is usually required to develop a blank that will just fill the die completely without requiring excess metal in any area. A preformed (preforged or pre-machined) blank may be used. One method sometimes used to provide accurate blanks is the use of powder metal preforms since the powder metal process can provide accurate and consistent forging blanks. Very close attention to all process details is required: workpiece temperature throughout the billet, descaling, die temperature (dies are heated), press pressure and stroke, and lubrication, are all of vital importance.

The precision forging process is often used to produce forged gear blanks. Aluminum is a metal commonly precision forged. The metal is heated to about 800°F (425°C) and the die temperature is maintained at 700 to 800°F (370 to 425°C) to insure proper metal flow[9]. It should be noted that precision forging usually requires higher pressures and stronger dies than other forging methods, and, because the dies are typically run hot, they have a shorter die life.

A4b3. ***flashless forging*** - is characterized by an absence of the excess metal (flash) that normally escapes between the die halves in closed-die forging. Excess metal is often necessary to insure proper filling of all portions of the die cavity, particularly when the operation requires high deformation of the forging billet. One approach used to eliminate flash, although not all excess metal, when the part has a center hole (eg., a gear blank) is simply to confine the excess metal to that center hole. There, it is more easily removed with a punch-press operation. The principal approach in making flashless forgings, however, is to carefully size the billet and control its weight, so that there is no excess metal. There is an overlap between precision and flashless forging methods, and the process refinements and controls used in precision forging may also help to eliminate flash. Precision forging usually minimizes and sometimes eliminates flash[3]. However, precision forgings are not necessarily flashless, and flashless forgings are not necessarily precision forgings. The advantage of flashless forging, of course is the reduction of metal required and the elimination of the post-forging trimming operation.

A4c. ***press forging*** - differs from drop forging in that the forging action results from a slow squeezing action rather than a hammer-like impact. This squeezing action produces deformation more uniformly throughout the workpiece, resulting in greater dimensional accuracy and less need for sidewall draft. The dies may need to be preheated to reduce heat loss from the billet, and to promote finer surface detail. The presses used for press forging are normally hydraulic. This process is most suitable for more complex shapes; less intricate, simpler shapes may be more advantageously produced by drop forging.

A4d. ***upset forging*** - is an operation that increases the diameter of a workpiece while shortening its length. It is the hot-material equivalent of cold heading. The workpiece material is normally in the form of a bar, on which a head or other larger-diameter portion is produced by the process. One part of the die holds the bar while another part of the die is forced against it axially, causing the metal to flow and fill the die cavity. Normally, only the part of the bar to be upset needs to be heated. Making bolt heads is the most common application.

A4e. ***roll forging*** - involves placing heated bar stock between two cylindrical or semi-cylindrical powered rollers that have shaped cavities on their surface. The workpiece is reduced in diameter or thickness, increased in length and often changed in shape. Die rollers can have multiple cavities, side-by-side, when the forging operation requires successive passes with different dies. Fig. 2A4e shows typical shaped rollers. Levers, shafts, and axle blanks are typical roll-forged parts.

A4f. ***isothermal forging*** - is a forging operation during which the workpiece metal temperature remains uniform and constant. This is achieved by heating the dies to the same a temperature as that of the forging material. The dies then do not chill the forging, allowing it to be forged with very slow strain rates. The approach overlaps and has the same purpose as precision forging - to produce forgings that are closer to the net shape of the finished parts. Aluminum, nickel, and titanium are the most common materials to be forged by this process, and are used particularly in the manufacture of aerospace components.

A4g. ***swaging*** - is described in sections 2D12 and 2F1 and is normally a cold-forming operation. However, in some situations, it is performed on heated workpieces. The surface finish then is inferior to that achieved in cold swaging but some work-hardenable materials perform better when swaged hot.

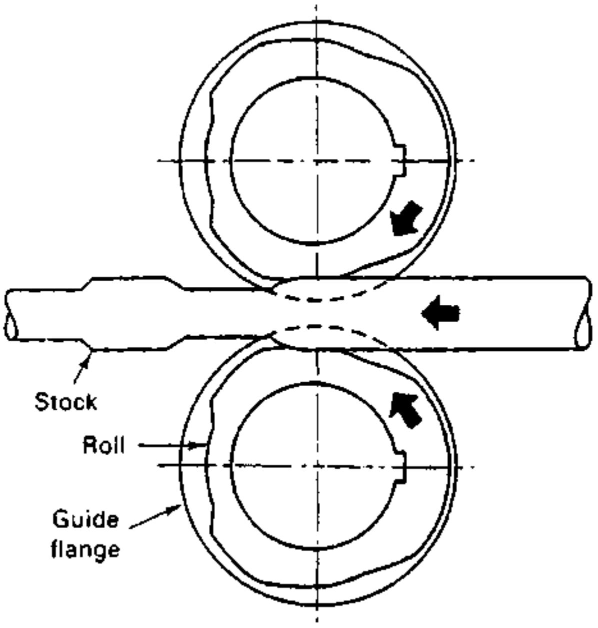

Fig. 2A4e The roll forging process. The stock is formed between two shaped rolls. (*Courtesy Forging Industry Association.*)

A4h. ***ring rolling (mandrel forging)*** - is a process for making ring-shaped parts of particular cross sections by rolling a ring-shaped blank between rollers that control the diameter, width, height, and cross-sectional shape. The ring cross sections may have rectangular or contoured elements. See Fig. 2A4h.

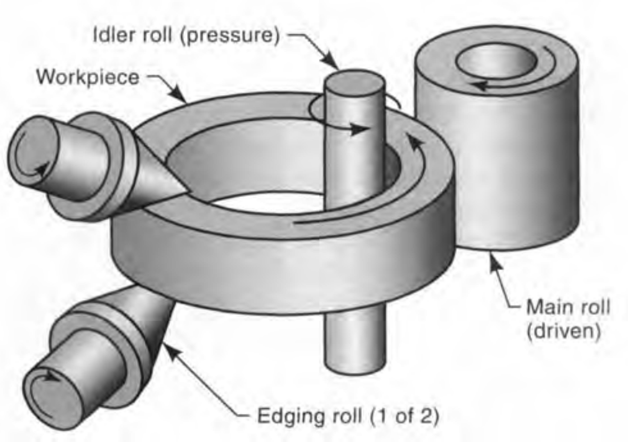

Fig. 2A4h Horizontal ring rolling to make a ring-shaped part with a rectangular cross section. (*Courtesy Forging Industry Association.*)

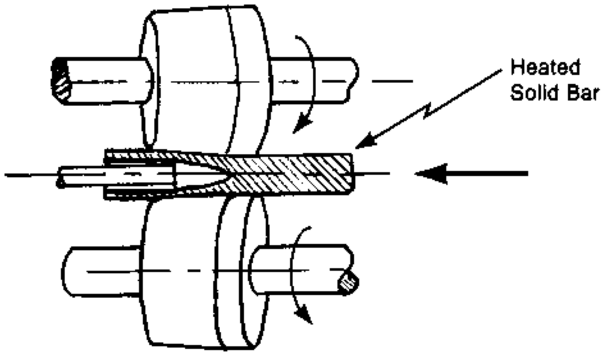

Fig. 2A5 Hot piercing, the first step in a method for making seamless tubing.

A5. ***piercing*** - as a hot working operation is different from that performed on cold sheet metal (section 3C5). Piercing, sometimes called ***rotary piercing***, is a process for manufacturing thick-walled seamless tubing. The process is illustrated in Fig. 2A5. In this process, a heated bar is passed between two tapered rollers that are canted at opposing angles of about 6 degrees from the axis of the heated bar. The bar is pushed forward against a pointed mandrel. The pressure and taper of the rollers tends to flatten the bar and cause a small crack to develop in the center. The pointed mandrel enters this crack and forces the metal to flow into a tubular shape. As the heated bar advances, a length of seamless tubing is formed. Various secondary operations are performed to size and straighten the tubing and to change the wall thickness. Seamless tubing up to about 150 mm (6 in) in diameter is made with this process but, when the piercing is used as a secondary operation on existing tubing, diameters up to 610 mm (24 in) are feasible[1].

A6. ***pipe welding*** - involves making pipe from heated strip (called "skelp" in this process) by roll forming it into cylindrical shape and pressing the heated edges together with enough force so that they fuse together to form a butt weld. The operation can also be performed by pulling the skelp through a tapered cylindrical die. The skelp can also be roll formed so that the edges overlap and form a lap joint. The rolls force the overlapping material against an internal mandrel where it fuses together. In all cases, additional rollers size and shape the welded pipe. Diameters for butt-welded pipe range from 3 mm (1/8 in) to 75 mm (3 in) and in lap welding from 50 mm (2 in) to 400 mm (16 in). Product length in the lap method is limited to about 7 meters (23 ft) because of the need for an internal mandrel[2].

A7. ***hot spinning*** - is metal spinning (section F6) with heated instead of cold material. Two common applications are the closing of the ends of tubing or cylindrical containers and the spinning of heavy plate stock.

A8. ***creep forming*** - relies on the property of some metals to flow at a slow rate when put under stress and heated. The stress level is below the yield point and the temperature is below that which anneals or otherwise heat treats the material. The process is used in the aerospace industry for large, thin components that require shallow contours. The manufacture of airplane wing skins is a common application. Aluminum sheet material is clamped in a fixture. Then the fixture with the clamped part is placed in an oven for a number of hours, typically between 4 and 8 hours. An alternative is to supply heat directly to the fixture. The sheet metal gradually assumes the shape of the tooling without significant internal stresses and retains the shape after the cycle is completed. Titanium and beryllium are also processed by this method with shorter holding times.

A9. ***warm heading*** - is the same as cold heading, described in section I2 below, except that the metal is heated to increase its ductility. The amount of upsetting possible per press stroke is increased. The work metal is heated to between 300 and 1000°F (150 and 540°C)[5]. The temperature depends on the metal to be headed, but is below the recrystalization temperature. The process is used chiefly for materials such as austenitic stainless steels, higher carbon steels, and other metals that are difficult to cold head because of their rapid work hardening characteristic[3].

B. Primary Cold-working Operations

B1. ***rolling*** - Cold rolling is a common process in the production of sheet, strip, bar, and rod forms of steel and other materials. It is similar to the hot rolling described in section A1 except that the metal is at room temperature. The material is passed between opposing rollers, sometimes with back-up rollers or in clusters of rollers, that compress the material and reduce its thickness - up to about 50%. Improved surface finish and dimensional accuracy are provided by the operation. With shaped rollers, various cross-sectional shapes can be produced and the operation can be a substitute for extrusion or machining. Cold-rolled material may exhibit improved yield strength because of the work hardening effect of the rolling operation. All malleable metals can be cold rolled.

B2. ***cold drawing*** - is a common method for reducing the size of wire, bar, tubing, and other shapes and is a different operation than the drawing (or deep drawing) of sheet metal. It may also be performed in conjunction with cold rolling or extrusion to produce special cross-sectional shapes. The material is forced through a die whose opening is smaller than the size of the entering metal. Except at the start, a pulling force is used to move the material through the die. The operation, illustrated in Fig. 2B2, improves the surface finish and dimensional accuracy of the material processed as well as reducing its cross sectional dimensions and sometimes, slightly changing its shape. Several dies are usually used in series, each progressively smaller than the preceding one. With some materials and depending on the size reduction and shape, intermediate annealing may be required between draws. Scale and dirt, if any, must be removed from the metal before drawing, and lubricants are normally employed to facilitate the operation. Cold finished steel usually is processed by cold rolling and drawing, but turning, grinding, polishing, and straightening operations may also be involved. The operation is performed on both solid wire (Fig 2B2, view a) and tubular material (Fig. 2B2, view b).

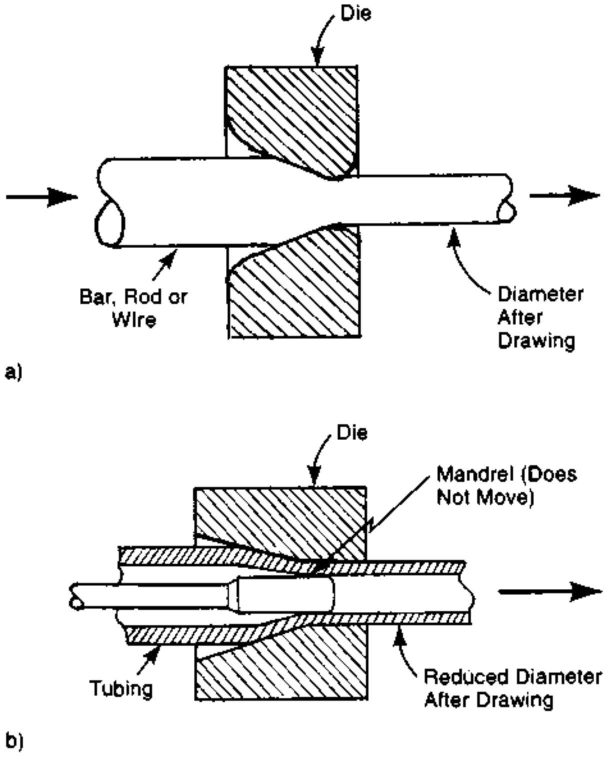

Fig. 2B2 Cold drawing. a) wire, b) tubing. The material is pulled through the die to reduce the diameter.

C. Sheet Metal Cutting Operations

C1. ***shearing*** - often refers to the cutting of sheet metal in a straight line without the generation of chips and without melting or oxidation. However, the cut may be curved as well as in a straight line. In many sheet metal operations such as blanking, punching (piercing), notching, parting, slitting, trimming, and lancing, the cutting action consists of shearing. The basic process is illustrated in Fig. 2C1. In the usual shearing process, the sheet metal lies on a lower tooling member, the die. The other tooling

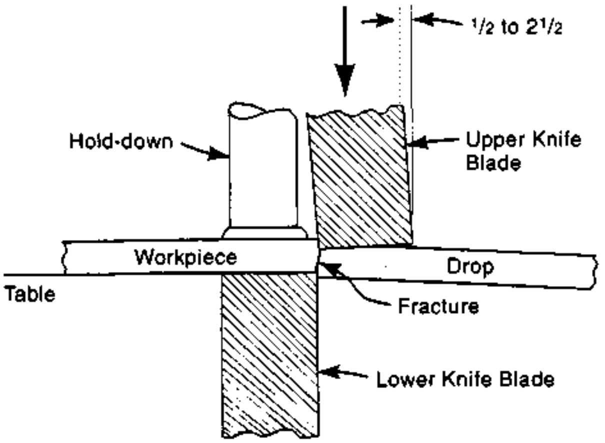

Fig. 2C1 A simple shearing operation is performed on a squaring shear.

member, the punch, has a sharp edge that is approximately opposite the sharp edge of the die. (There is a slight clearance between the two). Cutting takes place when the punch descends downward into the sheet metal workpiece. The sheet is cut and also deformed in a downward direction. When the force of the punch entering the workpiece exceeds the strength of the metal, the workpiece fractures. Fig. 2C4 shows the shearing action of a hole punch or blanking die. The edge of the sheared metal shows a slight depression at the one edge, where the punch or die has deformed it. There is an area of a smooth metal edge, the sheared portion, adjacent to which is an area of rough surface, the "break-away" portion. Fig. 2C4 shows the edge of a typical sheared or blanked sheet metal piece. Note the three portions of the edge.

C1a. ***squaring shears*** - are machines that perform the shearing operation. Fig. 2C1a illustrates a hydraulic squaring shear. The sheet to be cut is positioned on the machine table under the ram, which has a blade attached. The blade and the cutting edge of the machine table are in close alignment. When the ram descends, a set of clamping fingers or a clamping bar descend with it and hold the workpiece sheet firmly. The blade then moves down further to sever the workpiece. Usually, the blade is fastened to the ram at a slight angle to the horizontal so that the shearing action is progressive from one side to the other as the blade descends. The ram movement is usually machine-powered except for small machines, which may utilize human arm or leg power to lower the ram. The method makes accurate straight cuts on sheet. Sheet metal up to a maximum of about 1.5 in (38 mm) in thickness, and up to 20 ft in width, can be processed on the largest machines.

C1b. ***alligator shears*** - get their name because the pivoting action of the blades is reminiscent of the motion of an alligator's jaws. The shearing action is similar to that of scissors. These machines have somewhat shorter cutting blades than squaring shears and therefore are best adapted and most used for shearing rods, bars, and sections, rather than sheet, though they can cut sheet and plate material.

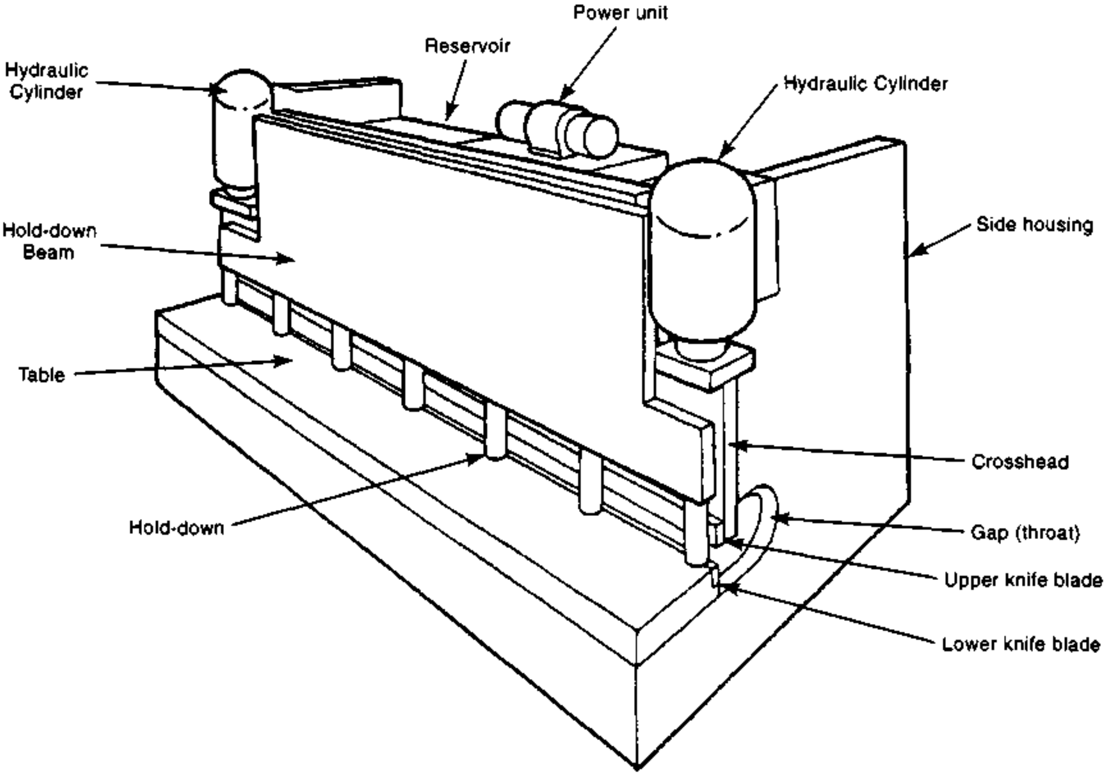

Fig. 2C1a A hydraulically-powered squaring shear. (*Courtesy Pacific Press Technologies.*)

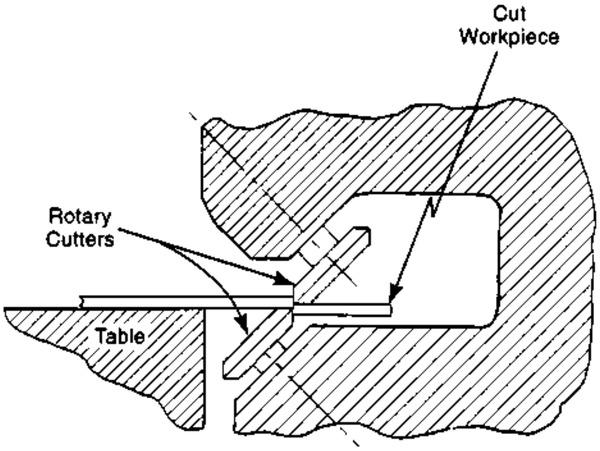

Fig. 2C1c A rotary shear used to make curved cuts in sheet material.

C1c. ***rotary shears*** - use two opposed and canted rollers, ground at an angle, that roll across sheet or plate and produce a shearing action. The arrangement is shown in Fig. 2C1c. The upper cutter is powered for both rotation and position. Steel plate up to about 1 in (25 mm) in thickness can be cut this way. Shearing can take place along a straight or curved path, and irregular parts can be cut out with this method. It is adaptable to low-quantity production.

C2. ***nibbling*** - is a sheet metal operation in which a long cut is made by punching a series of overlapping holes or slits in the workpiece. The nibbling press typically operates at 300 to 900 strokes per minute[3]. This approach permits complex cuts to be made, including blanking with simple standard tooling. The method works best when controlled in a CNC turret punching machine but can also be controlled manually, and by less sophisticated automatic equipment.

C3. ***slitting*** - is a shearing operation that divides sheet or coiled sheet metal into narrower widths. Circular shearing tools in a slitting machine, illustrated in Fig. 2C3, are mated cutters. The raised circular cutters on one arbor match a space between circular cutters on another arbor. Sharp edges perform the slitting operation. The operation is normally performed in a line of machines that feed coiled sheet material to the slitting machine and re-coil the stock after slitting. Edges are commonly slit to insure accurate width of the slit material.

C4. ***blanking*** - is a presssworking operation used in the production of parts from sheet metal. In the operation, a flat workpiece of the desired size and shape is cut out completely around the periphery in one press stroke with a punch and die set. The punch's cross-section and the die opening match the shape of the desired blank and differ in size only to the extent of the clearance between them. The punch descends and shears the sheet stock to sever the blank from the sheet, leaving stock entirely around the blanked workpiece. Fig. 2C4 illustrates the process.

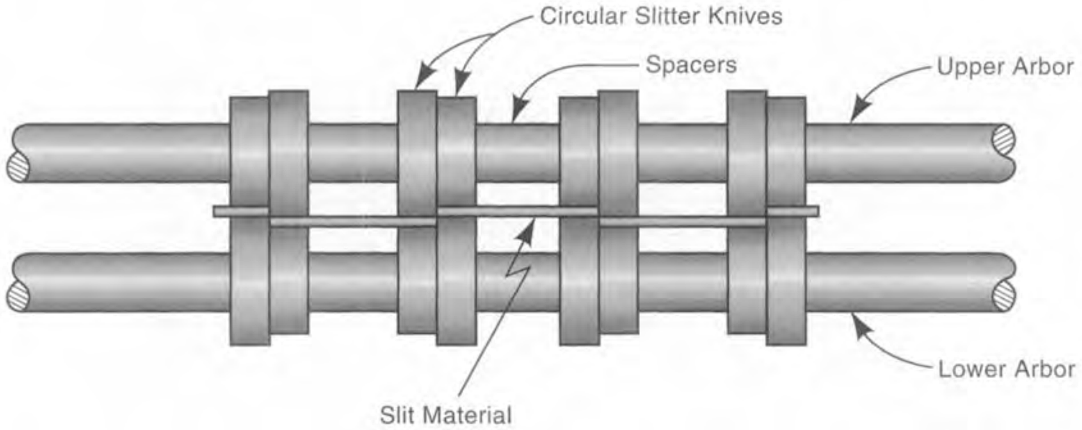

Fig. 2C3 Rotary slitting. Sharp edges of the circular slitting knives shear the sheet material.

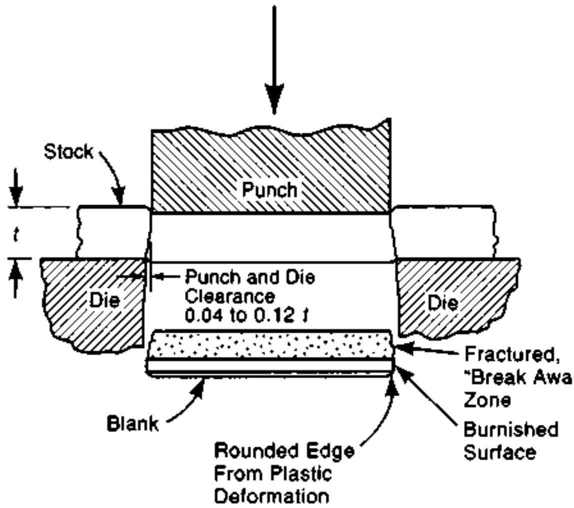

Fig. 2C4 The shearing action of a blanking punch and die. Note the edge of the blank which is typical of all sheared, blanked, or punched parts. There are three different edge areas: 1) the area of plastic deformation where the die edge first impinges the sheet, 2) the burnished area where pure shearing takes place, and 3) the breakaway area where the metal sheet fractures.

C4a. ***steel rule die blanking*** - This method is particularly suited to lower-quantity production of parts made of softer materials such as leather, rubber, plastic sheet, fibre, and paperboard. Dies are somewhat similar to cookie cutters. They consist of a thin strip of hardened steel bent to the shape of the blanked part and held in a base of wood or other material. The exposed edge of the strip is sharpened. The die is mounted on a press ram. On the opposing surface on the press bed, there is a hardened steel punch made from flat stock and cut to the shape of the blank. When the press ram descends, the steel cutting edge penetrates the work material and there is a shearing action between the steel rules and the punch. Although the materials noted above are most suitable, this method has allowed steels up to 3/8 inch (10 mm) and aluminum to 0.55 in (15 mm) to be blanked in short runs. Blocks of rubber in the die serve to strip the blanked workpiece from the die. Fig.2C4a shows the elements of a typical steel rule die.

C4b. ***dinking*** - is similar to steel rule die blanking in that the cutting is performed by a knife-like

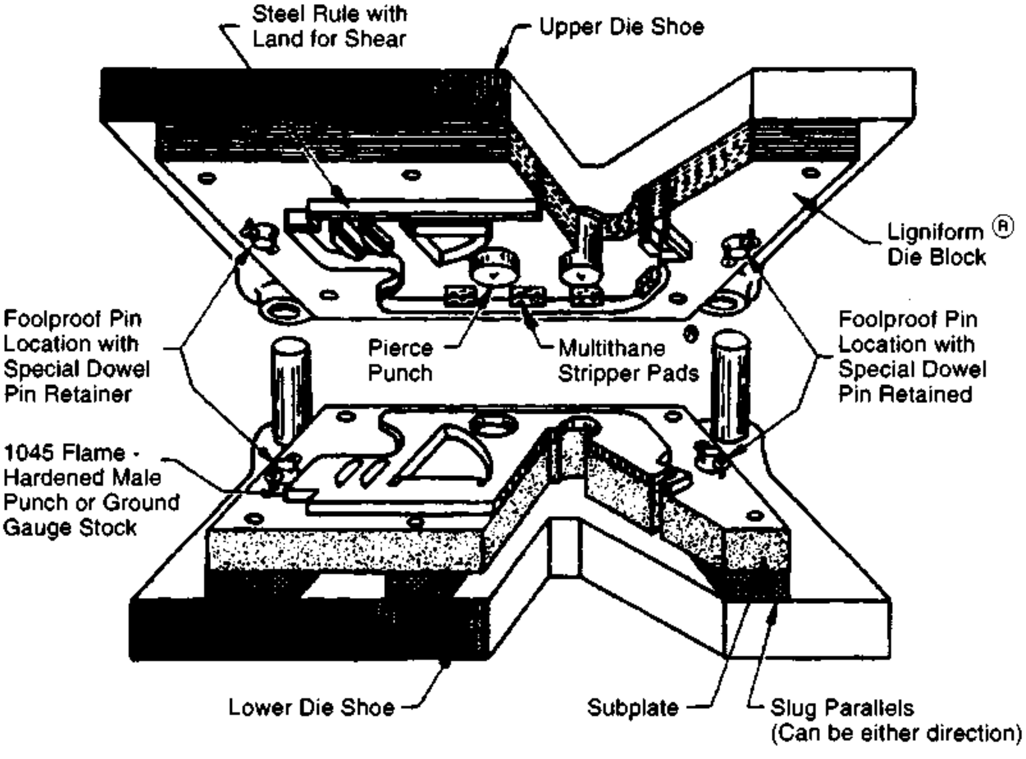

Fig. 2C4a Cross-section of a steel-rule blanking die. (*Courtesy J.A. Richards Co.*)

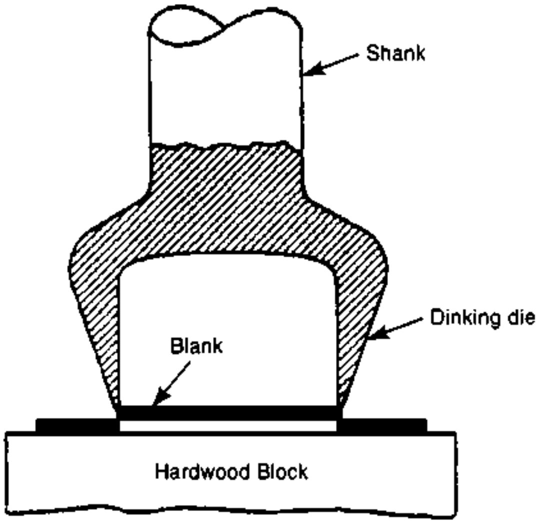

Fig. 2C4b Cross-section of a typical dinking die. The work material is cut when the die presses it against the hardwood block. (*from Niebel, Product Design and Process Engineering, McGraw-Hill, NY 1974*)

edge thast can bear against a flat surface. In this variation, the knife-like punch and its holder are all made from one piece of steel, hardened and sharpened at the edge. The process is illustrated in Fig. 2C4b. The process, like most steel rule die blanking, is used for cloth, fibre, rubber, and other soft materials.

C4c. ***cutoff*** - a stamping operation to sever a part from a sheet or strip of stock, normally with a single line cut. The operation is frequently the last one of a progressive-die sequence where a number of blanking, piercing, forming, and other operations are best performed on a work piece while it is still attached to the stock and the cutoff operation is the final one to create a discrete part.

C4d. ***parting*** - is similar to cutoff in that a part is severed from strip material except that the term, ***parting***, implies that some material is removed in the operation whereas cutoff implies a cut only along a single line. Fig. 2C4d illustrates the operation.

C4e. ***photochemical blanking*** - See chapter 3, paragraph S4.

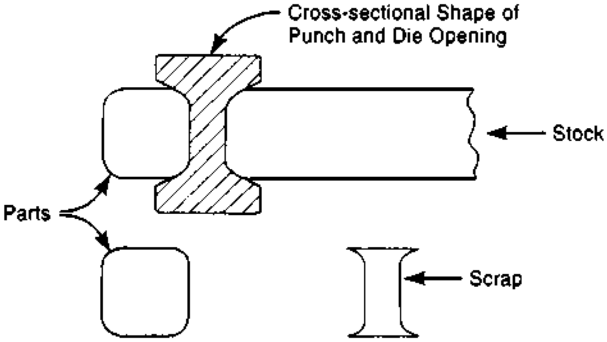

Fig. 2C4d A parting punch is used to make separate pieces from strip material when the end edges do not mate.

C5. ***punching*** - often called ***piercing***, is a press-working operation used to produce holes in sheet materials. The operation is a variation of blanking (2C4), being identical in that a separate piece (or pieces if multiple holes are punched in one press stroke) is sheared from another piece in one press stroke with a punch and die set, but different in that the purpose of the operation is to create a hole rather than a new part. The piece that is removed is scrap rather than a useful part. The hole punched can be circular or any other shape, according to the shape of the punch and the matching die opening.

C5a. ***turret punching*** - is performed on a machine that has two synchronized indexing tables, one containing punches and the other containing matching dies. The machine also has a free floating table to which the work piece is attached. The flat work piece can be moved, either manually, often with the aid of a template, or by computer-numerical control to position the work piece under the operating punch. When the press is actuated, the punch descends and punches a hole in the work piece. When there are several holes to be produced, the work piece is moved in succession to the designated locations and the press is tripped at each position. When there are holes of several sizes, the turret mechanism can index to present a different size punch and die. Notching, nibbling, lancing, louver forming, slotting, embossing, and other operations are also feasible with the appropriate tooling. This equipment is used for work pieces that are too large to be punched with a single die

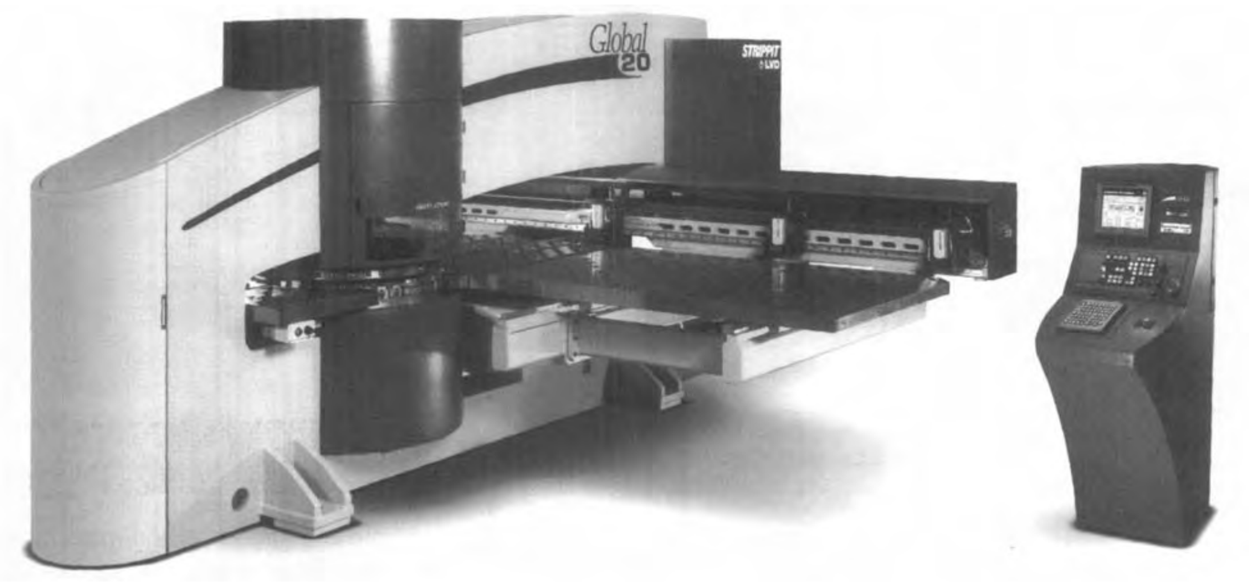

Fig. 2C5a A CNC turret punching machine. Movement of the sheet, changes in punches and dies through rotation of the turret, and the punching action, are all controlled automatically. (*Courtesy Strippit LVD, Akron, New York.*)

set or parts made in such low quantities that they do not justify an investment in dedicated tooling. See Fig. 2C5a.

C5b. ***notching*** - is punching or piercing performed at the edge of the work piece. The edge of the strip or blank becomes part of the perimeter of the piece that is removed. The operation is performed when the shape of a blank is too complex to fully incorporate in a blanking die, for low-quantity work when complex tools are not justifiable, to free material for a subsequent forming or drawing operation, or to remove material that would otherwise be distorted in a subsequent operation. A work piece with several notching operations performed is illustrated in Fig. 2C5b.

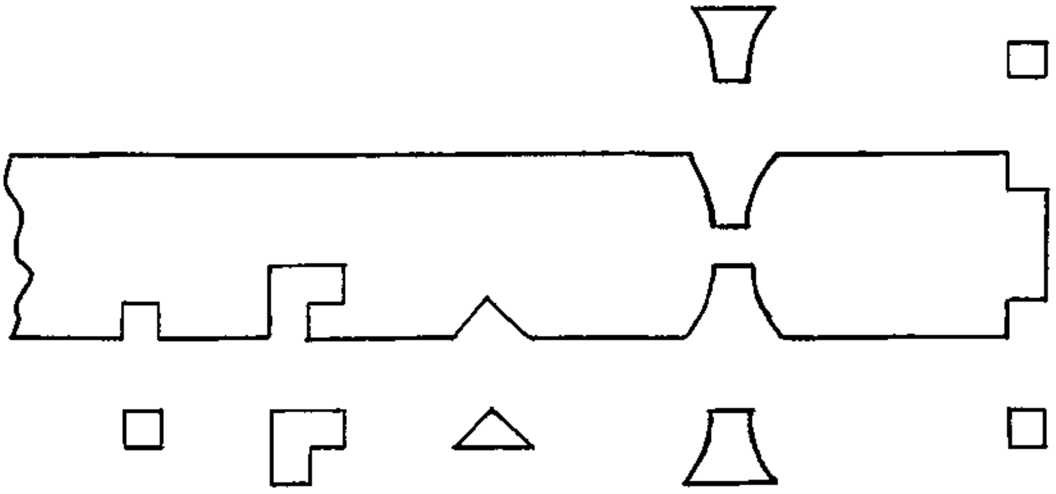

Fig. 2C5b Metal strip with various notches made to provide the desired workpiece shape or to facilitate a subsequent bending or forming operation.

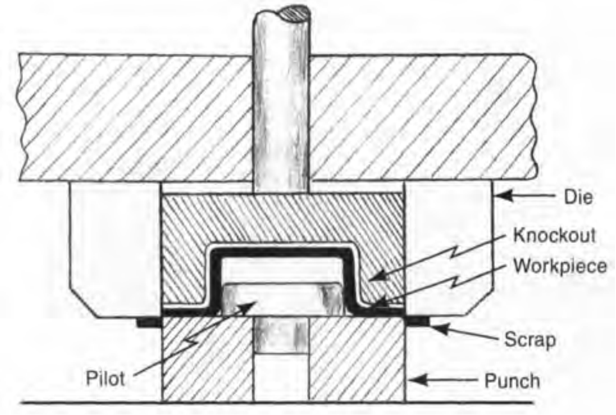

Fig. 2C6 Trimming a drawn cup. This method is intended to leave a flange at the top of the cup.

C6. ***trimming*** - is a stamping operation used to remove unwanted material that occurs as a result of some other process such as casting, forging, forming, or deep drawing. The operation is similar to blanking except that the workpiece is a semi-finished part instead of a flat piece of sheet stock, and the trimming die is shaped to contain the shape of the part. In die casting, trimming removes sprues, flash, and runners. In deep-drawing and some forming operations, trimming removes flanges left where the material was gripped or held. A workpiece with this trimming operation is illustrated in Fig. 2C6.

C7. ***shaving*** - is a secondary operation performed on sheet metal workpieces after blanking or piercing. Its purpose is to refine the edge finish or the dimensions of the blank. The process is similar to blanking except that the fit between the punch and die is very close. Very little metal, only a few thousandths of an inch, is removed from the part. The edge of the workpiece, after the operation, is sheared smooth through about 75% of the stock thickness, with reduced rounding or "pull-down" and very little rough breakaway area. Sometimes, a second shaving operation is performed on the workpiece to further improve the straightness and length of the smooth portion. Before the advent of fineblanking, the process was used to produce smooth-edged stampings. Stamped gears are a typical application.

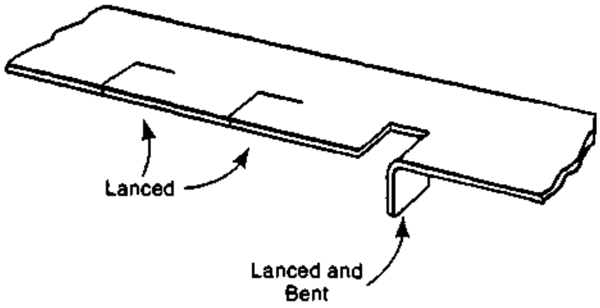

Fig. 2C8 A workpiece with lancing cuts, and one bending operation.

C8. ***lancing*** - is a sheet metal operation that makes a slit or cut that is not long enough to produce a separate piece. No scrap is produced because the cut does not extend from edge to edge. The usual purpose is to facilitate a subsequent forming operation on the workpiece by allowing the material to flow more easily. A workpiece with this kind of cut is illustrated in Fig. 2C8.

C9. ***fineblanking*** - is a method for producing smooth edges and other improved features on stamped metal parts. It involves both blanking and forming. The method requires closer control and several features in presses and tooling compared to those in conventional stamping. These features include a more precisely controlled press stroke, a closer fit between punches and dies, the use of a shaped pressure plate with a v-shaped impingement ring surrounding the die to hold the workmaterial and provide compressive stress in the part, a floating ejector pin to provide pressure on the material and against the punch force, and somewhat slower press speeds. Another difference is that the close-fitting punch does not enter the die. A typical fineblanking operation is shown in Fig. 2C9-1. The operation requires a press with the following characteristics: separate actions for the punch, v-ring pressure, and counterpressure; capability for a fast approach stroke, a slow shearing speed, and a fast ram retraction rate; control of the shut-height setting within 0.0004 in (0.01 mm) to insure that the punch stops at precisely the correct point; and sufficiently accurate guideways that the punch-die clearance can be maintained within half percent 2% of the stock thickness. Fig. 2C9-2 illustrates the difference between the edges of conventionally blanked and fineblanked parts. Fineblanking is utilized in the manufacture of precision parts that otherwise may require machining or other secondary

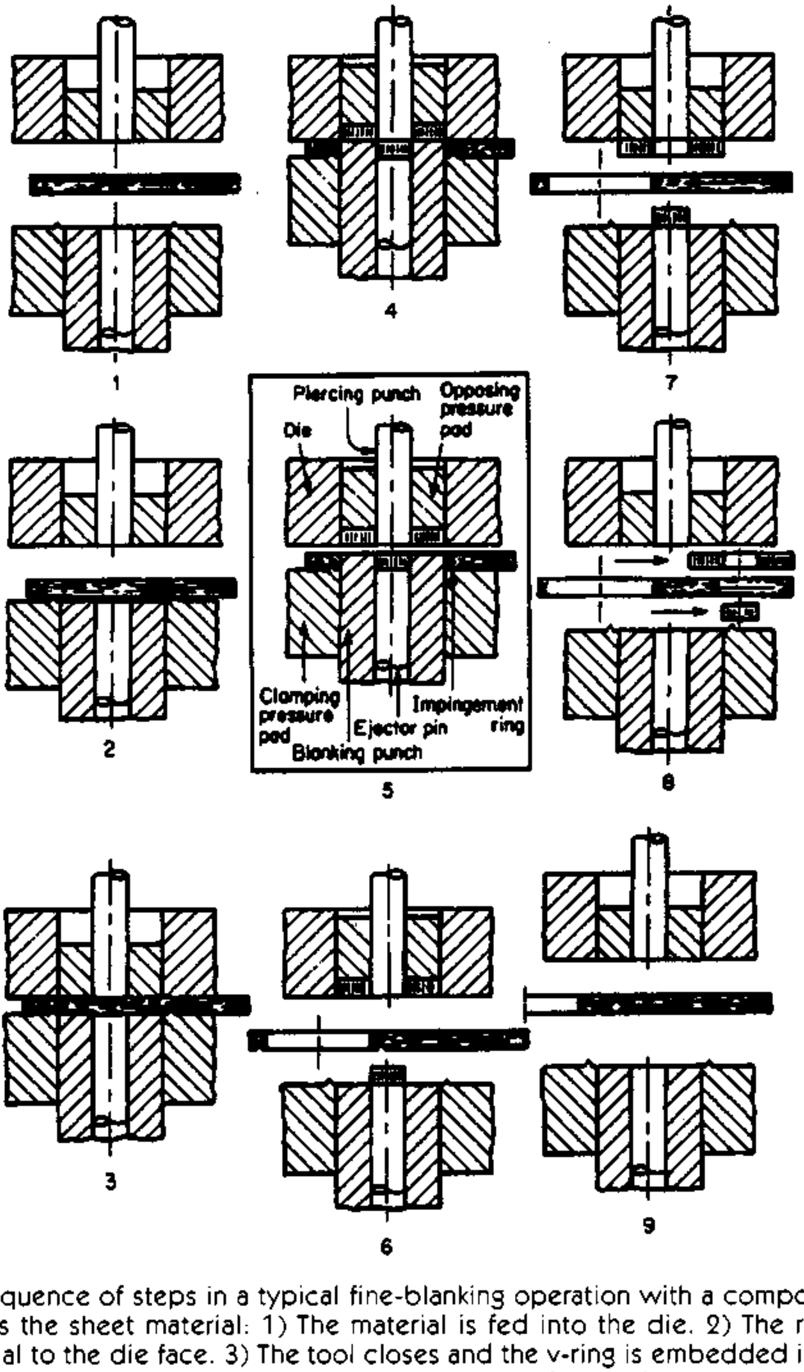

Fig. 2C9-1 The sequence of steps in a typical fine-blanking operation with a compound die that both blanks and pierces the sheet material: 1) The material is fed into the die. 2) The ram lifts the table, die set, and material to the die face. 3) The tool closes and the v-ring is embedded in the material. The counterpunch clamps the material against the blanking punch face inside the shear periphery. 4) The v-ring pressure and counterpressure are held constant while the punch moves upward, shearing the part into the die and the inner slug from the punch. At the top dead center position, all pressures are shut off. 5) The ram retracts and the die opens. 6) The v-ring elements moves upward, stripping the punch from the skeleton material and pushing the inner slugs up out of the punch. The material feed begins. 7) The counterpressure is reimposed, stripping the part from the die. 8) The part and the slugs are ejected from the die by either air jets or by a removal arm. 9) The cycle is complete and ready to repeat. (*from Bralla, Design for Manufacturability Handbook, McGraw-Hill, New York, 1999*)

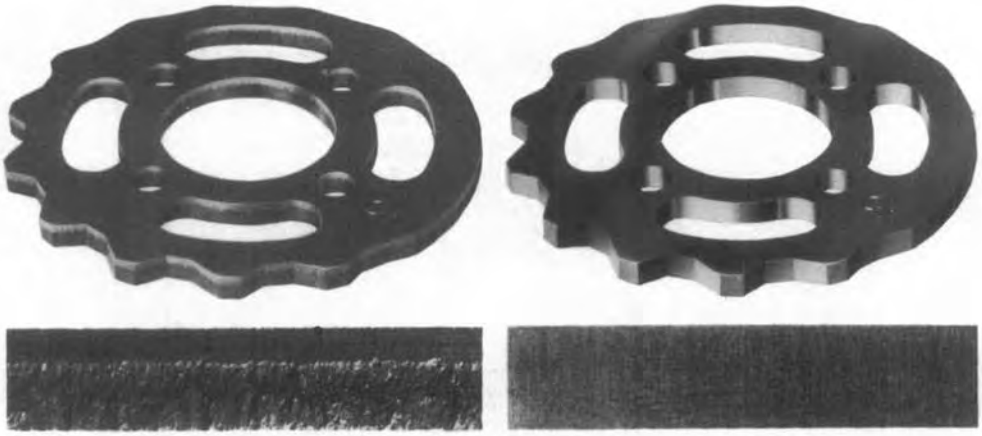

Fig. 2C9-2 Comparison of the edge surface produced by conventional stamping (left) and fine blanking (right). *(Courtesy Feintool New York, Inc.)*

operations after blanking, and for making parts that may not be feasible by conventional stamping methods. Stacked gears, cams, sewing machine and business machine parts are examples. The method is not limited to blanking: forming, piercing, coining, embossing, etc. may also be performed on the workpiece with a separate operation or with compound and progressive dies, when required.

C9a. ***semi-piercing*** - is piercing with a shortened punch stroke so that the piece that would otherwise be removed from the part is offset rather than severed. If done properly, there is no fracture in the workpiece metal. In fact, the metal joining the offset and the base material is strengthened by the cold working it receives. The offset part can function as a cam, a stop, a rivet, or a locating pin. Fine-blanking is particularly suited for producing strong and accurate semi-piercings as illustrated in Fig. 2C9a.

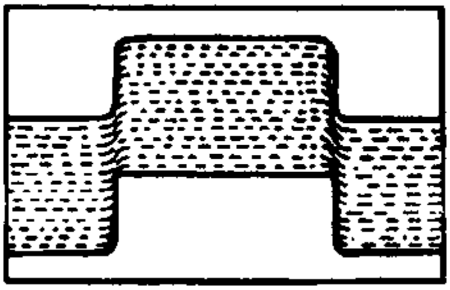

Fig. 2C9a Cross section of semi-piercing in sheet metal. *(from Bralla, Design for Manufacturability Handbook, McGraw-Hill, New York, 1999)*

D. Press Bending and Forming Operations of Sheet Metal

D1. ***bending*** - is the deformation of material about a straight axis. There is little or no change in surface area of the workpiece. Material on the outside of the bend tends to be stretched and material on the inside tends to be compressed. Bending is a very common sheet metal operation. When performed as an individual operation, usually in smaller quantity production, it can be done on a bending brake (sometimes called a bar folder), as shown in Fig. 2D1-1, if the sheet is about 1.5 mm (0.060 in) or less in thickness. Press brakes are used for thicker stock. Bending as a punch press operation is often carried out with wiper dies as illustrated in Fig. 2D1-2.

D1a. ***press brake bending*** - Press brakes, as illustrated in Fig. 2D1a, are mechanical or hydraulic presses with long, narrow, stationary

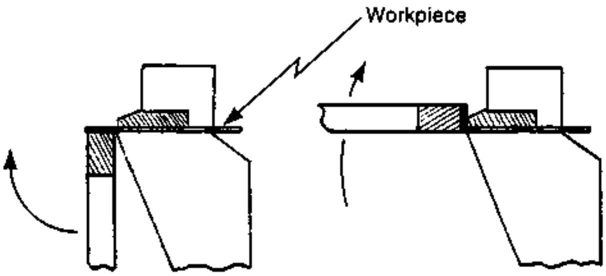

Fig. 2D1-1 The bending action of a manually-operated bending brake (bar folder).

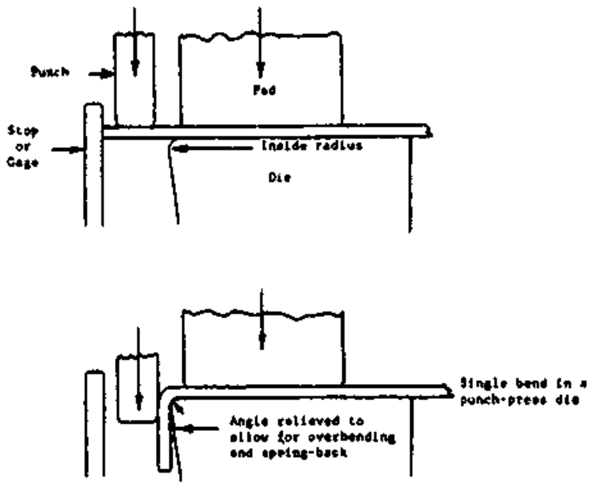

Fig. 2D1-2 Bending sheet metal with a punch press wiper die. (*from Niebel, Product Design and Process Engineering, McGraw-Hill, NY 1974*)

beds. Bed lengths range from 2 or 3 ft to 30 ft and press tonnages from 10 to several thousand. The ram stroke is short but adjustable. Dies are long, narrow, and often simple V-dies. Both sharp and gentle bends can be made, depending on the shape of the dies. Piercing, notching, forming, shearing, edge curling, beading, hemming, corrugating, and tube forming can be performed with suitable dies. In bending, sheet metal, placed between the bed and the ram is most commonly bent once with each press stroke. The bend occurs when a shaped punch, attached to the press brake ram, descends against the workpiece, forcing it into a suitably-shaped die, fastened to the press brake bed. Multiple bends are made by repositioning the workpiece sheet between press strokes. Press brakes are used in the bending of long, narrow workpieces and for other workpieces made in small quantities where standard press brake tooling can be employed.

D1b. ***V-die bending*** - V-block dies are commonly used in press brakes. The die half has a V-shaped cavity and the punch has a corresponding V-shape of the same or somewhat lesser angle. The punch and die extend over the entire width of the press. The angle of the bend is the same as that provided by the V-block less any spring back.

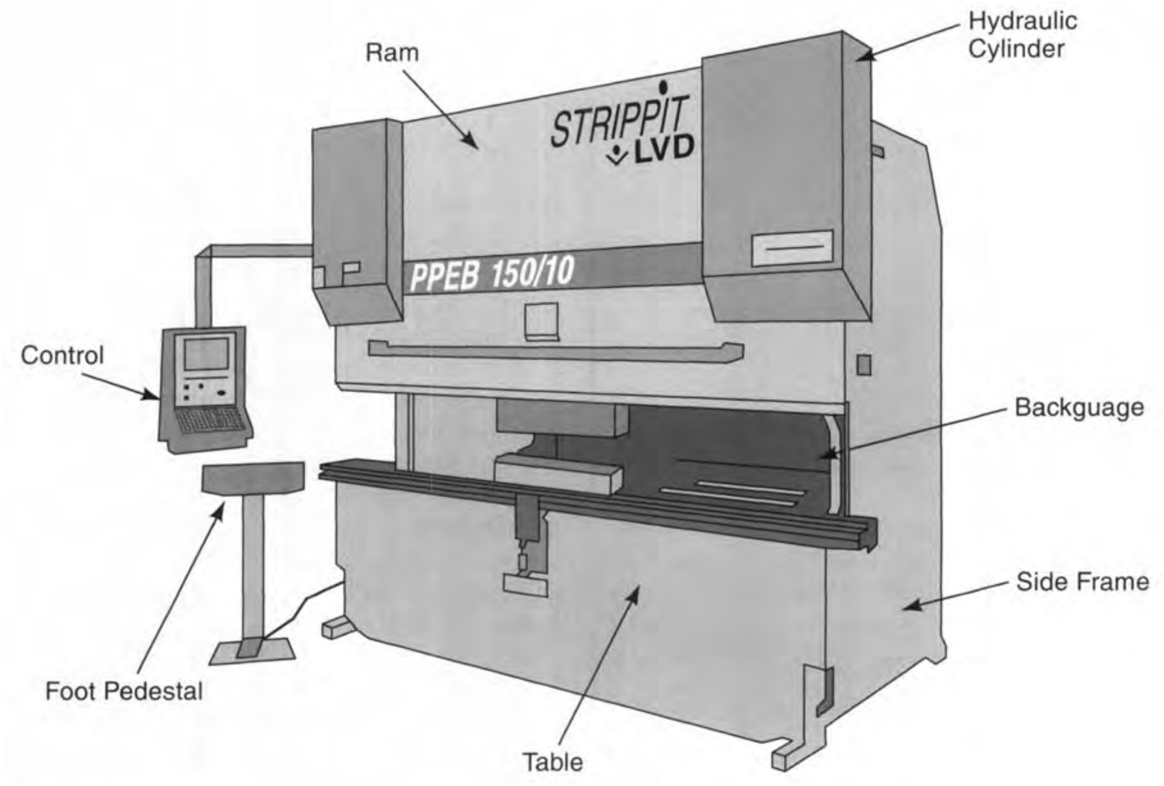

Fig. 2D1a A typical powered press brake. (*courtesy Strippit LVD, Akron, New York*)

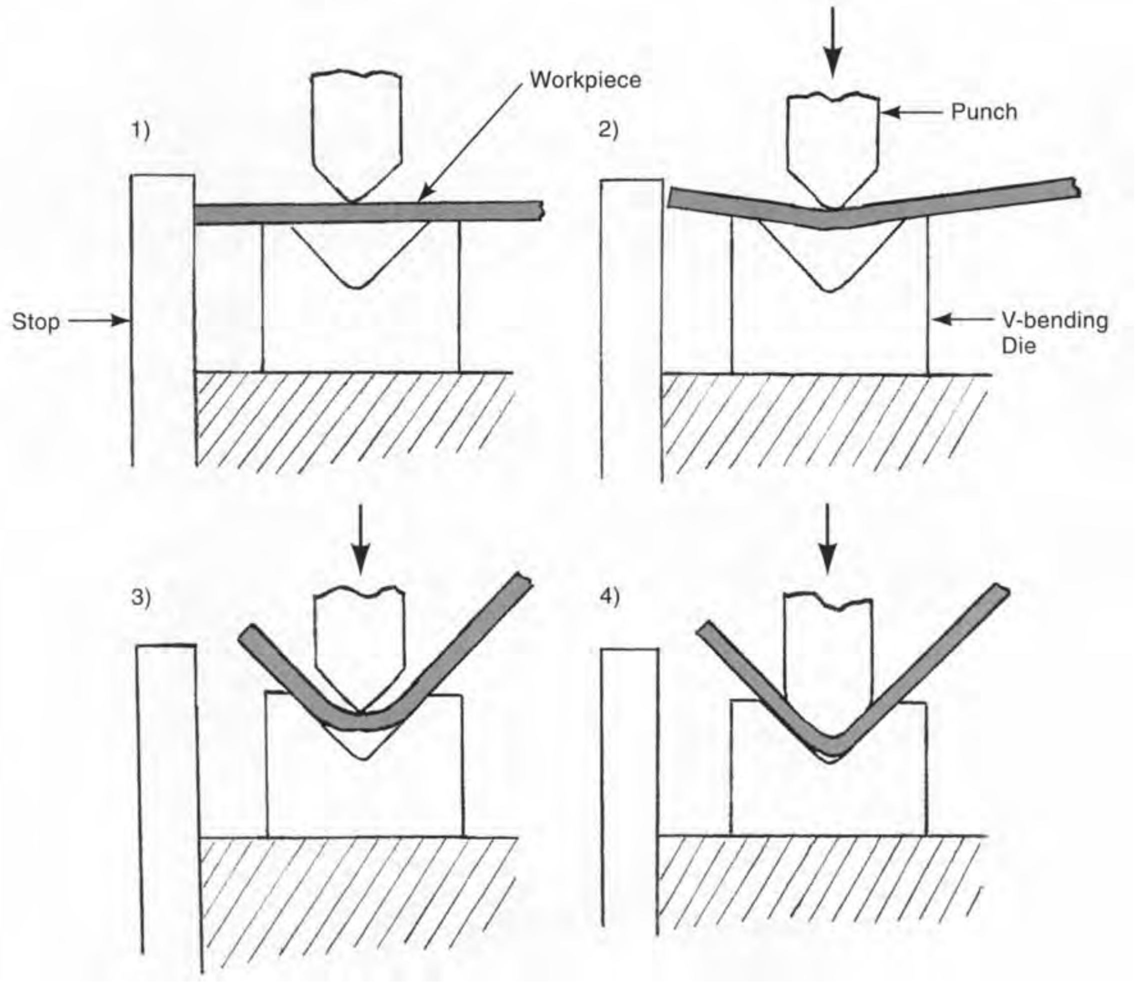

Fig. 2D1b Making a 90 degree bend in a V-die in a press brake.

Typical examples of V-dies are shown in Figs. 2D1b, 2D1c, and 2D11.

D1c *air bending* - In air bending, the upper die in a press brake set does not bottom in the v-block. The degree of bend depends on the depth of movement of the upper die, as shown in Fig. 2D1c. This approach has the advantage that adjustments can be made in the process to accommodate variations in materials and that one die set can be used for bends of a variety of angles. However, the results may not be as consistent as they are when the upper die bottoms in the V-block.

D1d. ***punch press (bending die) bending*** - all the bending operations feasible with press brakes can also be made in regular punch presses, though not over as great a length. Dies similar to the V-block dies commonly used in press brakes are sometimes used but other die configurations are more common. Dies dedicated to a particular part permit high-production bending of one or more bends, often in combination with other press operations. Again, the descending stroke of the press ram typically carries a punch that pushes the workpiece against an adjacent form block, bending one or more sides of the workpiece.

D2. ***forming*** - is any operation that changes the shape of a solid-state workpiece by force or pressure. Forming operations have one thing in common: permanent useful deformation or plastic

Next Page

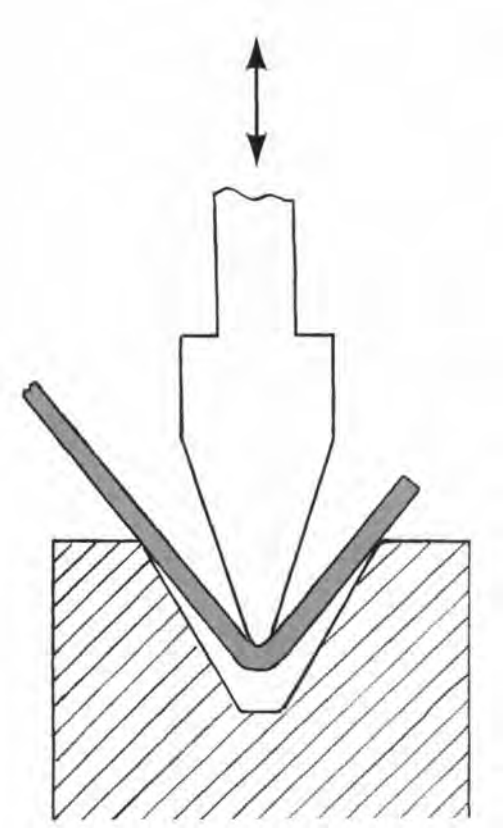

Fig. 2D1c Air bending sheet metal, using a V-die in a press brake.

flow of the workpiece material as a result of forces applied to it. This definition covers operations such as bending, rolling, forging, cold heading, extrusion, metal spinning, swaging, coining, and deep drawing. It applies to sheet metal and material of other shapes. Casting and machining, however, are not be forming operations. In sheet metal operations, however, the term, forming, is often applied to operations that involve somewhat more deformation than simple bending but that do not fall into another clear-cut category such as deep drawing, coining, embossing, or rotary swaging, especially if the operation is intended to change the thickness of the part. Included in the term, forming, then would be the production of dish-shaped parts, flanges or other bends along curves or at corners and other miscellaneous sheet metal operations. Fig. 2D2 illustrates a simple tooling arrangement for forming a sheet metal workpiece.

D3. *forming with rubber tooling*

D3a. ***rubber tool forming (rubber pad forming)*** - is a method of bending and forming that simplifies the tooling required by substituting a confined rubber pad for one half of the die. The other half of the die consists only of a simple block around which or against which the part is formed. The confined rubber pad acts like hydraulic fluid exerting force in all directions as it is compressed. The tooling tends to be quite simple and the forming blocks can be made of low-cost materials including non-metals. The process is suited for short-run production since tooling costs are low. The process is commonly used in making aluminum parts in the aircraft industry.

D3b. ***Guerin process*** - is a common rubber-tool forming process that also can be used to blank parts. A rubber pad of fairly soft durometer, usually 6 or more inches thick, is fastened to the press ram and is surrounded on the sides with steel or cast iron walls strong enough to contain the rubber against the pressure of forming. The forming block is fastened to the press platen. When the press ram descends, the rubber pad forces the workpiece against the forming block and, as the workpiece bends, rubber surrounds the workpiece and applies horizontal as well as vertical pressure to force it against the forming block. The process is illustrated in Fig. 2D3b. The maximum feasible depth of the formed portion is about 1.5 in (37 mm).

When blanking is required, the edges of the lower blocks are hardened and have sharp edges. The blocks can be as little as 3/8 in (10 mm) thick. The pressure of the rubber pad causes the workpiece metal to be sheared by the sharp edge. Rubber of higher durometer is used when blanking is included in the operation. Aluminum sheet up to about 0.050 in (1.3 mm) thick can be blanked.

D3c. ***Marform process*** - is a rubber-tool process that uses a deeper rubber pad in the press ram and adds a flat steel holder plate, supported hydraulically or by springs to act as a blankholder during the downward movement of the rubber pad. The arrangement permits deeper forming and drawing of irregular parts. Drawing depths equal to the workpiece diameter are feasible.

Previous Page

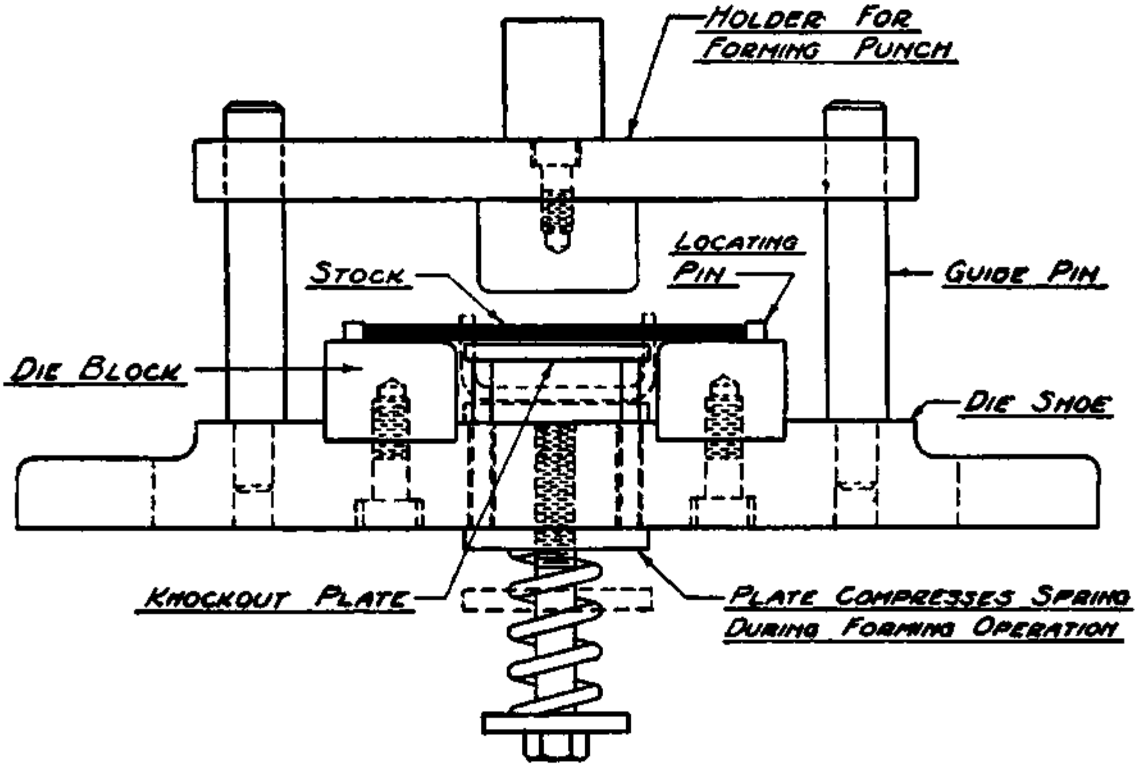

Fig. 2D2 A punch and die made for a forming operation.

D3d. ***rubber diaphragm forming (hydroform process) (fluid forming)*** - in this process, the rubber pad is replaced by a hollow flexible rubber diaphragm which contains hydraulic fluid. This fluid provides improved sideways pressing capabilities so the process can be used to form deeper parts. The forming block is attached to a hydraulic cylinder that forces it upward against the diaphragm, raising

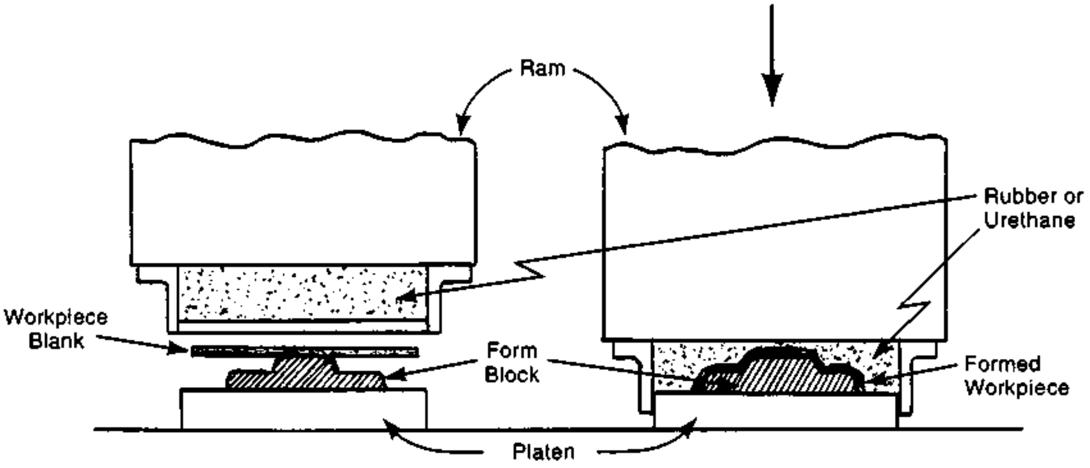

Fig. 2D3b The Guerin process for rubber tool forming. The rubber takes the place of one half of the forming die that would otherwise be required.

the pressure in the system. Hydraulic pressures up to 15,000 psi (100 MPa) may be used. Fig. 2D3d illustrates the process.

D3e. ***Verson-Wheelon process*** - is another rubber-diaphragm process. There is no press stroke. Instead, hydraulic pressure is applied directly to a diaphragm that forces a rubber pad against the workpiece. The process is applicable only for relatively shallow formed parts, similar to those processed with the Guerin process, but can produce somewhat greater detail and variety of forms. Fig. 2D3e shows how the process works.

D4. ***drop hammer forming*** - uses repetitive strokes of a drop-hammer press to form sheet metal parts. (See drop forging, A4a.) The process is particularly suitable for parts with shallow, smooth contours and generous radii, including parts with double curvature. Beaded parts can be produced.

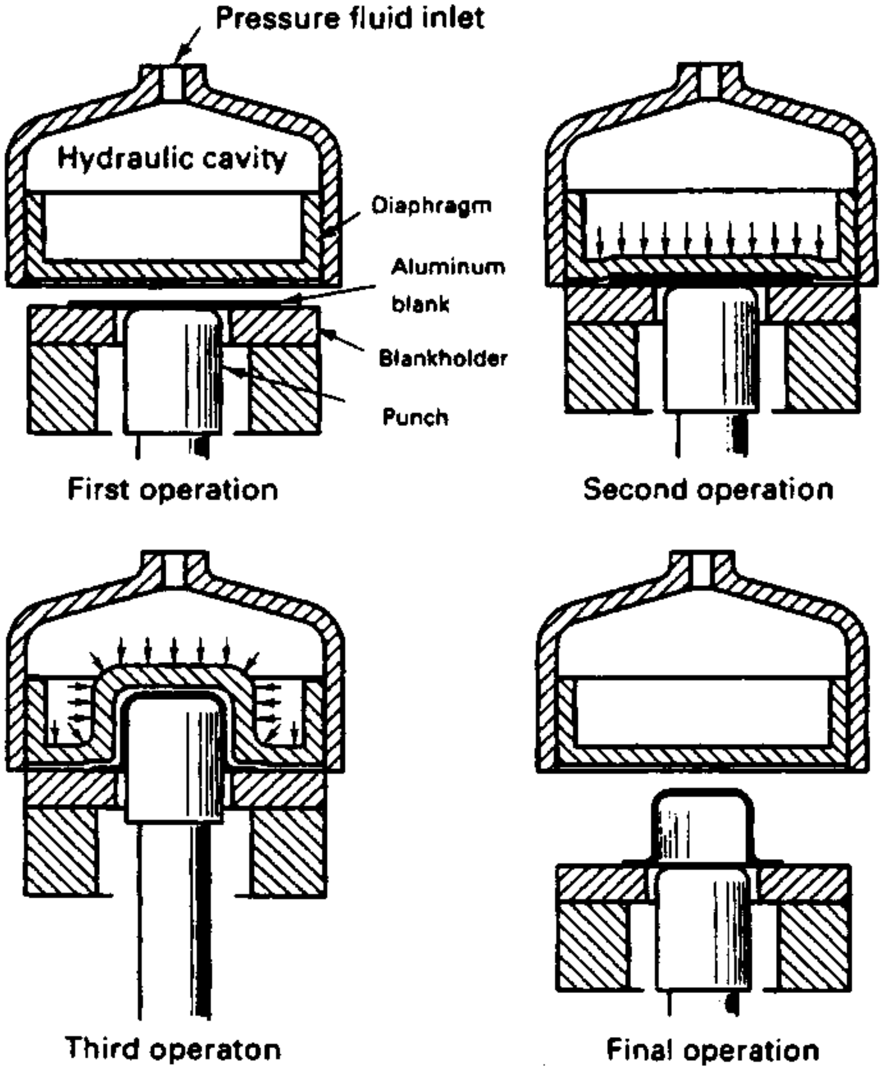

Fig. 2D3d A schematic view of the rubber diaphragm forming process (hydroform or fluid-forming process) showing: 1) the blank in place ready for forming, 2) the press closed and the cavity pressurized, 3) the ram advanced into the cavity and, 4) the pressure released and the ram and press retracted. *(Courtesy Aluminum Association, Washington, DC)*

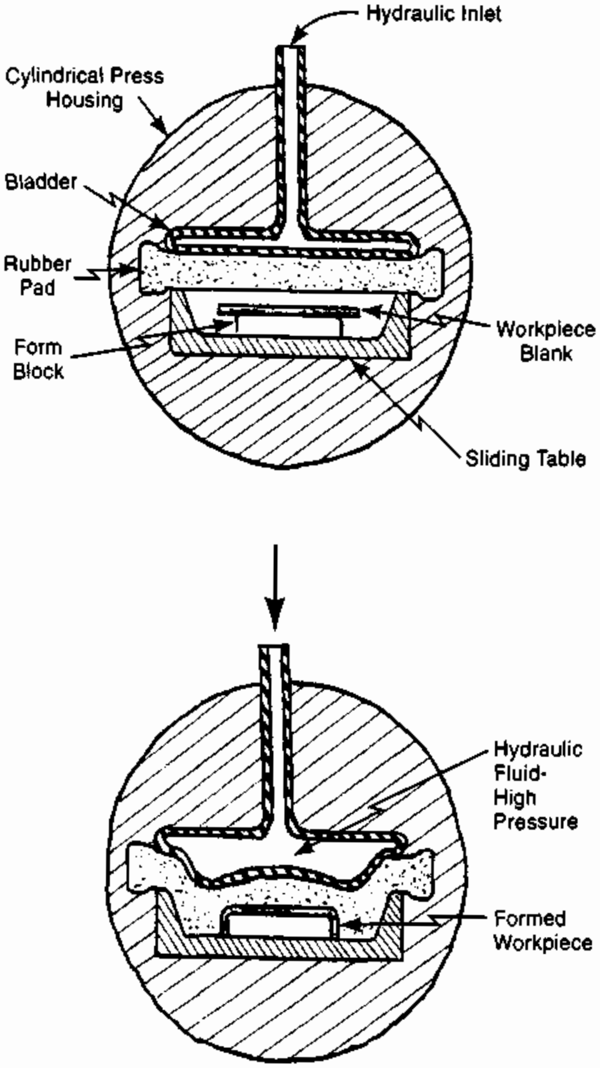

Fig. 2D3e The Verson-Wheelon process which uses a rubber bladder and hydraulic pressure to provide the forming force.

The tooling is simple and can be cast from low-melting-temperature alloys. Since tooling costs are relatively low, the process can be economical for limited production quantities. Applications are is normally limited to sheet metal thinner than 0.064 in (1.6 mm). Dimensional tolerances are wide.

D5. ***drawing (sheet metal parts)*** - is a process that forms a recess in a flat sheet-metal workpiece. The process can produce cup, cylinder, and box-shaped parts with a depth considerably greater than the diameter. (It is then called. "deep drawing".) When the press ram descends, a punch attached to the ram pulls or draws the metal into a die cavity over the die cavity's rounded edge. The operation involves flowing rather than stretching the sheet material. To control the operation, the drawing die or press includes a blank holding device. The blank holder (pressure pad) restricts the movement of the workpiece and keeps it from wrinkling but allows it to flow toward the punch and die cavity. Blankholder pressure is typically about one third of the pressure required for drawing. Thinner metal requires greater blankholder pressure[4]. The thickness of the sidewalls of the part normally increase during the operation. A close fit between the die cavity and the punch can be used to "iron" the sidewalls, maintaining their shape and reducing the thickness. Fig. 2D5 illustrates the operation. When the depth of draw is more than three-quarters of the diameter or width of the part, two or more draws, with annealing between draws, are usually required. The need to control the blank movement by holding it, usually

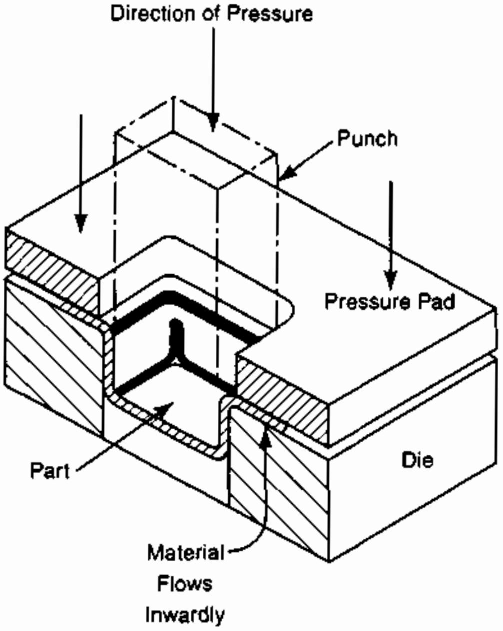

Fig. 2D5 Schematic of deep drawing showing the blank holder (pressure pad). *(from Bralla, Design for Manufacturability Handbook, McGraw-Hill, New York, 1999)* results in excess material that needs to be trimmed off in a secondary operation. Typical parts made by drawing are: beverage cans, artillery shells, cartridge cases. auto body panels, and pots, pans, and other containers.

D5a. ***shallow drawing*** - commonly refers to a drawing operation when the depth of the part is less than one half its diameter.

D5b. ***deep drawing*** - commonly refers to a drawing operation when the depth of the part is greater than one half its diameter. One or more redrawing operations and, with some materials, annealing before redrawing, may be required.

D5c. ***redrawing, direct and reverse*** - Sometimes a drawn part is run through a second drawing operation to increase the depth and reduce the diameter of the part. The drawn part is placed in a die recess and a punch, smaller in diameter than that used in the previous drawing operation, pulls it into the die. The blank-holding function is also involved to control the metal flow. Annealing may be required between the original and the redraw operations if the workpiece metal is the type that work hardens.

In direct redrawing, the operation proceeds in the same direction as the original drawing. The punch is made in two parts, an inner punch that determines the inner diameter of the part after the operation, and a sleeve that surrounds this punch. The outer diameter of the sleeve is about the same diameter as that of the drawing punch in the first operation. This sleeve enters the workpiece first and serves the same function as the blank holder in the first drawing operation. As the inner punch strikes the workpiece, it pulls it downward around the sleeve into a smaller diameter. See Fig. 2D5c, view a). A double-action press provides both the holding action and the drawing action.

Reverse redrawing performs a similar operation, but the workpiece is inverted in the die and the die again is configured with a two-piece punch which provides both holding and drawing operation. The advantage of reverse drawing is that the workpiece is not subjected to severe stress in one direction and then the other. This allows a greater percentage diameter reduction in the operation and lessens the need for annealing between operations. Fig. 2D5c, view b), illustrates reverse redrawing.

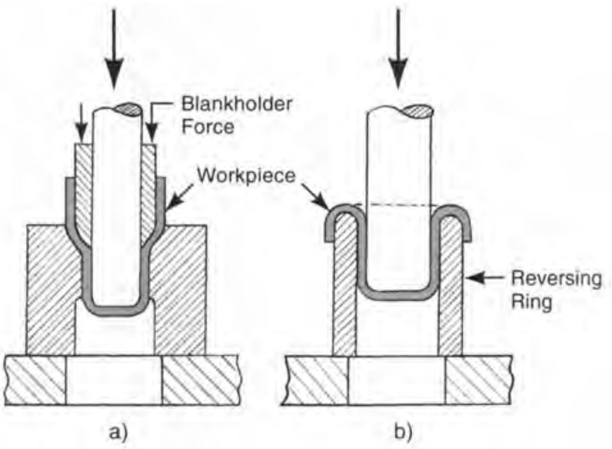

Fig. 2D5c Redrawing a drawn part: a) direct redrawing, b) reverse redrawing.

D6. ***coining*** - is an operation that changes the thickness of a sheet metal part, usually to create visible designs, markings, or other configurations on the surface. Very high compressive forces, and dies that confine the workpiece so that it doesn't flow in the lateral direction, are required. The workpiece thickness changes locally and its surfaces are formed to match accurately whatever design exists on the die surfaces. Fig. 2D6 illustrates the effect of the process and contrasts it with embossing. One difference is that coining permits the opposite surface of the part to have a different design. Coining is used to produce coins, jewelry, tableware, medals, and other parts where markings on both sides, or thickness changes, are required. Pressures as high as 100 tons per sq in (1400 MPa) may be required. Knuckle-joint mechanical presses are frequently used for the operation because they can provide the high pressure with a slow squeeze and dwell at the bottom of the stroke. Ductile materials, including low-carbon mild steel, are suitable for the operation. (Note: Also see roll coining, F4.)

D6a. ***drop hammer coining*** - is a process in which the high pressures required for coining are provided by the impact force of multiple blows of a drop hammer rather than by a high-force, slower-acting,

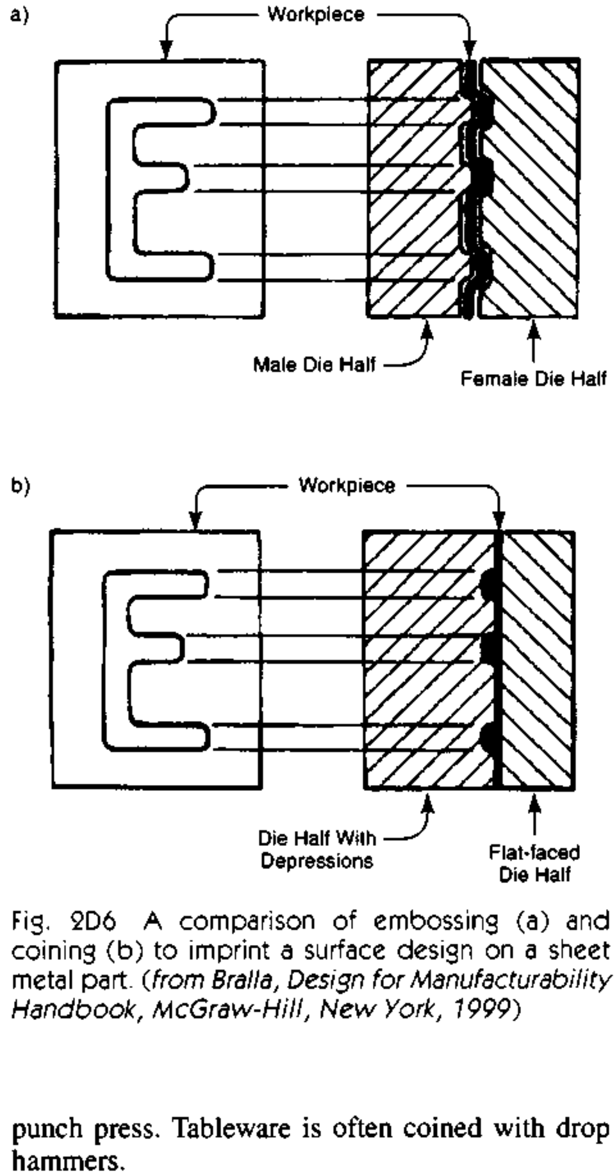

Fig. 2D6 A comparison of embossing (a) and coining (b) to imprint a surface design on a sheet metal part. *(from Bralla, Design for Manufacturability Handbook, McGraw-Hill, New York, 1999)*

punch press. Tableware is often coined with drop hammers.

D7. ***embossing*** - is a process, usually performed on sheet metal, that results in raised areas on one side of the sheet and depressed areas opposite them on the other side. The operation is basically a shallow drawing operation that does not significantly change the thickness of the sheet It is frequently performed to create a pattern in the surface of sheet metal workpieces. Reinforcing ribs and identification markings on stamped parts, tags, jewelry, and nameplates are typical applications. The height of the raised area is normally no more than three times the material thickness. Fig. 2D6 illustrates the process, and contrasts it with coining. (Note: Also see rotary embossing, F5.)

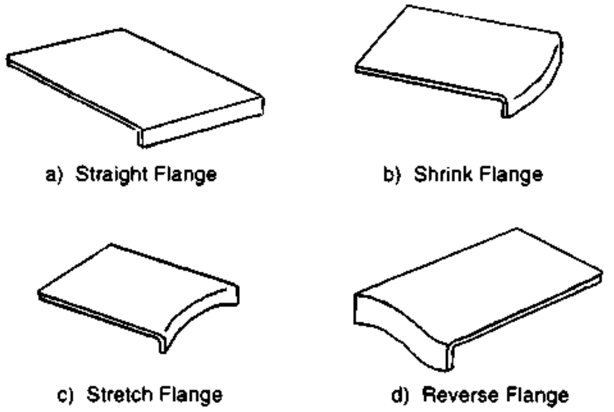
a) Straight Flange
b) Shrink Flange
c) Stretch Flange
d) Reverse Flange

Fig. 2D8 Various types of flanges: a) straight flange, b) shrink flange, c) stretch flange, d) reverse flange.

D8. ***flanging*** - is a bend of approximately 90 degrees near the edge of a sheet metal part, usually for reinforcement. If the bend is along a straight line, a simple bending operation is all that is required; if there is an inside or outside curvature to the bend, as shown in Fig. 2D8 b), c), and d), more extensive forming is required because metal will be forced to flow as the bend is made.

D9. ***beading*** - forms a shallow round trough of uniform width in a sheet metal workpiece. The trough can be depressed or raised, and can be in a straight line or can be curved or circular. Its purpose is to provide stiffening or decoration in the part produced. The thickness of the sheet does not change. The process is similar to embossing except that embossing implies a more complex pattern of formed material. A simple stiffening bead is illustrated in Fig. 2D9, where view a) shows the cross section of a press brake die for making a simple stiffening bead and view b) shows the bead itself in section and plan views.

D10. ***hemming and seaming*** - Hemming is the bending of a sheet edge back 180 degrees on itself to provide a rounded edge or reinforcement. The bend can be produced by roll forming, or by two bending operations, or in one operation with a

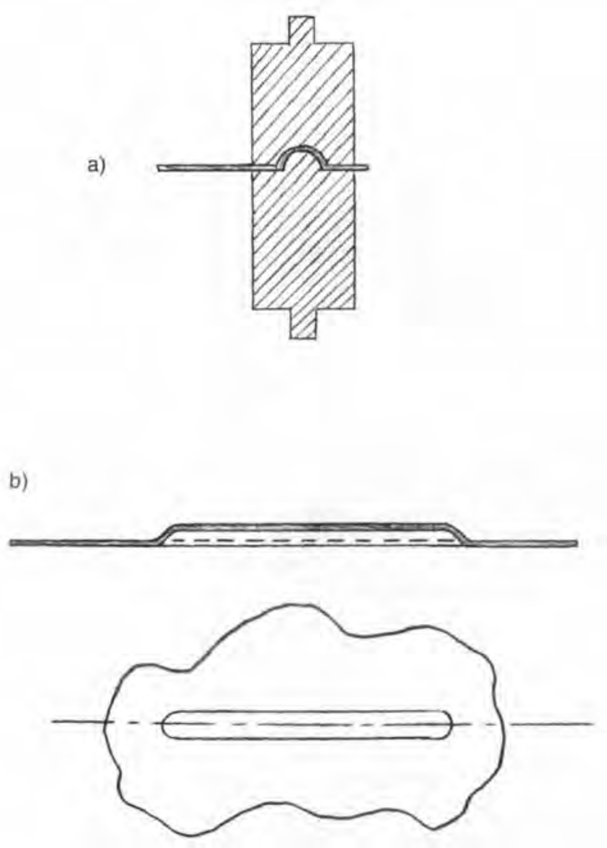

Fig. 2D9 A simple stiffening bead in a sheet metal part. The operation used to form the bead is very similar to that used in embossing.

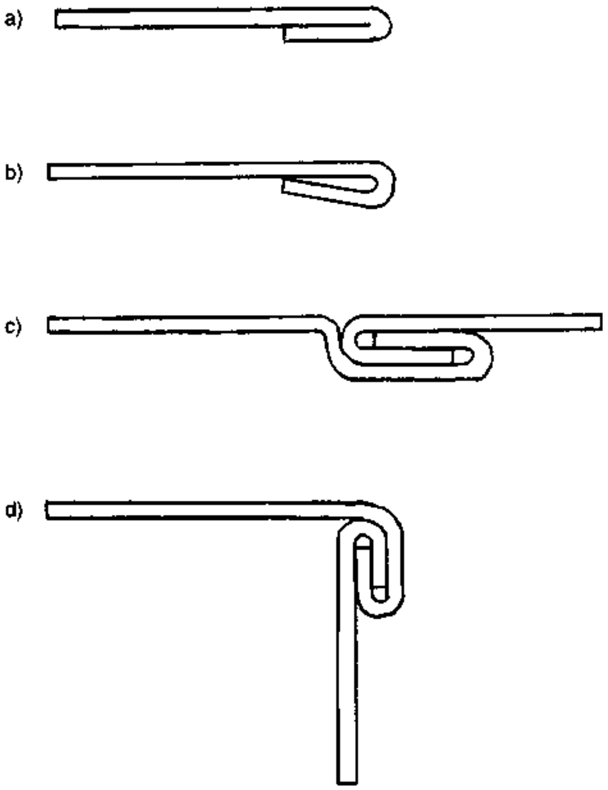

Fig. 2D10 Hems, a) and b), and seams, c) and d), on sheet metal parts. Seams are formed by interlocking hems on the edges of two sheets.

cam-operated or compound die. Seaming is the joining of two opposite edges of a workpiece with interlocking hems or other interlocking bends. It is frequently used in the manufacture of containers such as pails, drums, and cans. Special machines are often used for the operation, particularly in high production applications. Fig. 2D10 illustrates both hems and seams.

D11. ***edge curling*** - provides a coiled or partially-coiled edge on the workpiece for reinforcement or to provide a smooth edge. On straight edges, curling can be performed with two press brake dies as illustrated in Fig. 2D11. On curved edges the operation is more complicated because curling reduces the diameter of the curved section and provision must be made for removal of the punch. Punch removal may be provided for by using a segmented punch. When the punch is to be removed, a segment is retracted so that the punch diameter is reduced.

D12. ***swaging*** - has several meanings. As a press operation, sometimes called *flat swaging*, it compresses a workpiece severely to reduce the thickness of all or part of it, to flatten it, or otherwise changes its shape. The process is similar to coining, but does not form the workpiece as completely as coining does. However, the term *swaging*, is most commonly used to refer to rotary swaging described in F1.

D13. ***sizing*** - is a press operation that improves the dimensional precision of a workpiece by subjecting it to high force in an accurate die. Perhaps the most common example is the re-pressing operation

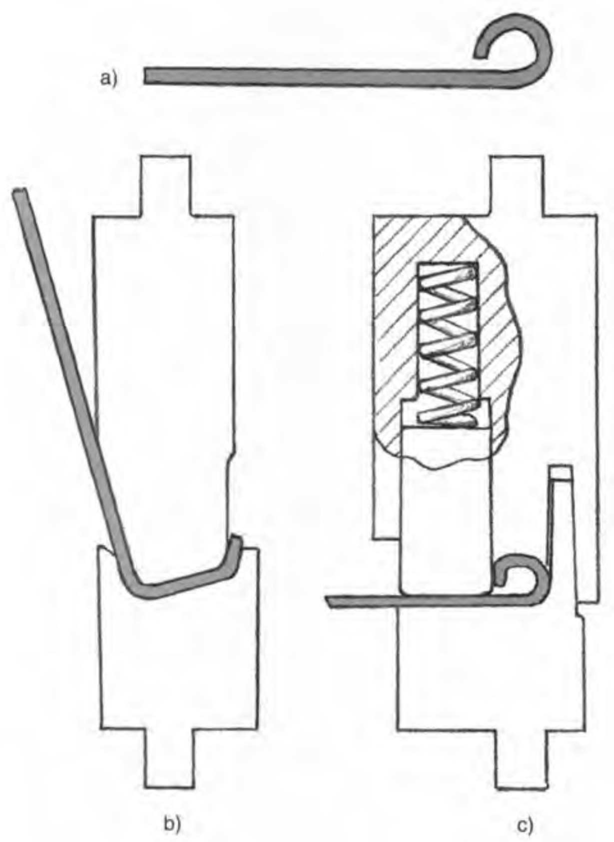

Fig. 2D11 Edge curling. a) cross-section of a sheet with a curled edge. b) and c) show the two-step sequence of forming a curled edge with press brake dies. The second die includes a member to hold the sheet from shifting during the final curling step.

performed on powder metal parts (See below.) Sizing is also performed on forgings, castings, and various cold-formed parts. With sheet metal parts, the operation is similar to coining in that the thickness of the workpiece may be reduced, except that the part is not confined in the die as it is in coining. The operation is used to flatten and sharpen the edges of stampings.

D14. ***ironing*** - is an operation that smooths and thins the walls of a cup-shaped part by forcing the part through a die with a punch. The operation works the material severely, so that annealing may be required afterward. It is illustrated in Fig. 2D14.

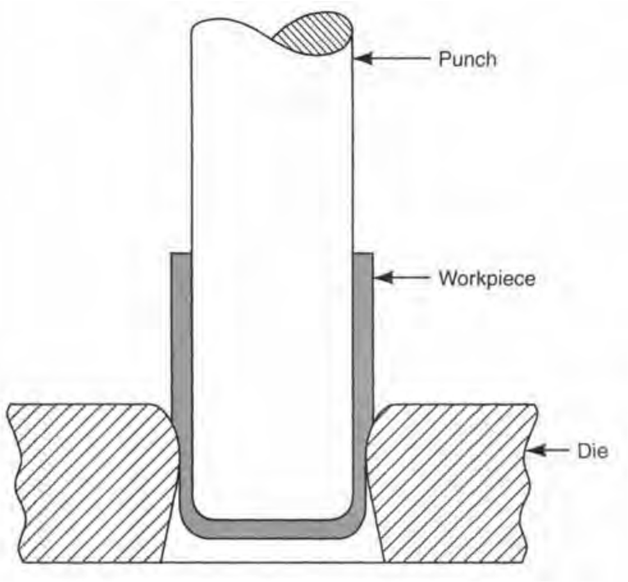

Fig. 2D14 Ironing a drawn part smooths the side walls, reduces their thickness, and lengthens the workpiece. (*from Schey, Introduction to Manufacturing Processes, McGraw-Hill, New York, 1987*)

E. Multiple Die Stamping Press Operations

E1. ***progressive die operations*** - In this metal stamping method, the work material moves from station to station through the die in step-by-step increments. There can be two or more stations in the die and, often, ten or more. After each movement of the work material, the press ram makes a stroke and a stamping action takes place. Once the front end of the work material has moved all the way through the die, a finished piece is produced with each press stroke. Stamping operations take place at all die stations with each press stroke (except for die stations left blank to facilitate material flow or for other reasons). Complex stamped parts can be produced with this method at rapid rates. The approach is widely applicable but sufficient production quantity is needed to provide economic justification for the cost of the tooling. Operations at each die station can run the full gamut of stamping including piercing, notching, lancing, blanking, forming, drawing, and trimming. Pilot holes to assure alignment at subsequent stations are typically punched at the first station. Typical parts produced with this approach include a wide variety of mass-produced products and components such as laminations for electric motors, metal kitchen tool parts, automotive parts, aluminum cans, and all kinds of mass-produced sheet metal parts. In the last station, the part is cut away from the strip or sheet material. Fig. 2E1 illustrates a typical, but simple, progressive die operation.

E2. ***transfer die (transfer press) operations*** - Transfer dies consist of several separate die stations for sequential operations on a particular part, all positioned on one press bed and are all actuated with the same press stroke. The workpiece can be manually moved from die to die between press strokes, but the major benefits of the system occur when the transfer press is equipped to move the workpiece from die-station to die-station automatically. The operation is similar to that of progressive dies except that the parts are severed from the strip stock before all the operations on it are complete, and the transfer mechanism then moves the workpieces. The transfer mechanism consists of parallel rails with grippers, fingers, cam-actuated slides or levers, that move and position the workpieces. Each die-station is independent and can be adjusted separately from the others, but all perform an operation with each press stroke, unless deliberately made idle. Blanking, piercing, shearing, bending and forming operations can be performed. An advantage of the transfer die approach is that it can be used to perform secondary stamping operations on parts already formed and may reduce material loss since

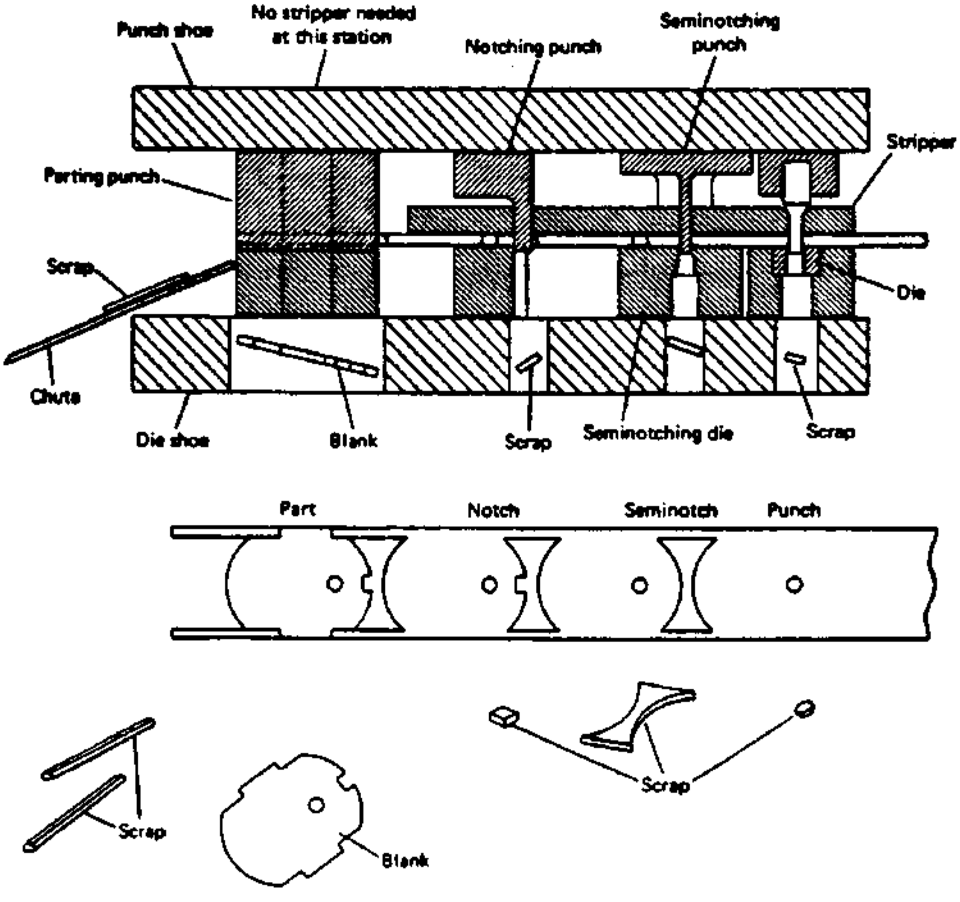

Fig. 2E1 A typical simple four-station progressive die that blanks and punches a part. (*from Niebel, Product Design and Process Engineering, McGraw-Hill, NY 1974*)

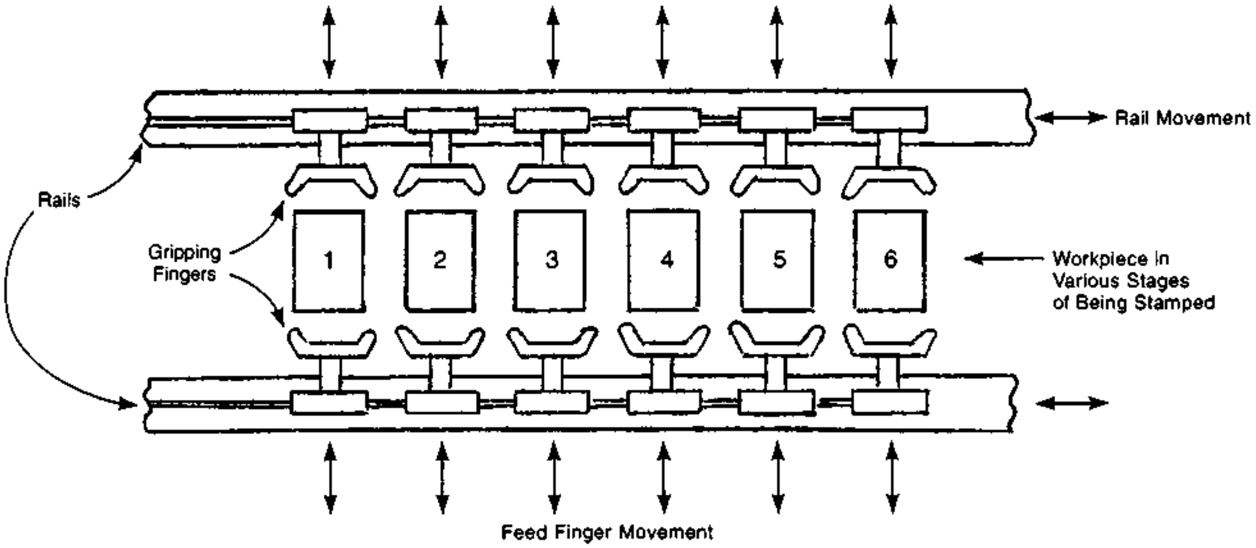

Fig. 2E2 A schematic view of the transfer mechanism used in a transfer press with six stamping stations. Gripping fingers move forward to grasp the workpiece at each station; the rails then move to the right to the next station; fingers then retract and the press makes another stroke. The cycle is then repeated. After station no. 6, the workpiece is deposited in a take-away chute; new workpieces are loaded at station 1 after each press stroke.

the alternative method, progressive die stamping, requires the use of some stock material to hold the workpieces as they are moved from station to station. The transfer material then becomes scrap. The transfer die process is useful in making parts that are difficult to form when they are connected to the stock, as in progressive die stamping. Making small rings, cylinders, and cups, from strip stock are common applications. The approach depends on high quantity production to amortize the high costs of tooling, equipment, and set-up costs involved. Fig. 2E2 shows a typical transfer die operation.

E3. ***compound die operations*** - Compound dies perform several operations on the workpiece at one die location and in one press stroke. Typical combinations are blank and bend, blank and form, blank and pierce. An example would be an operation in which the part is first blanked and then, as the press ram continues to descend, die elements perform a bending operation on a portion of the blank that was just created by blanking. Another common use is to blank a part and simultaneously punch an opening in it, as illustrated in Fig. 2E3. The advantage of a compound die operation is that it eliminates the

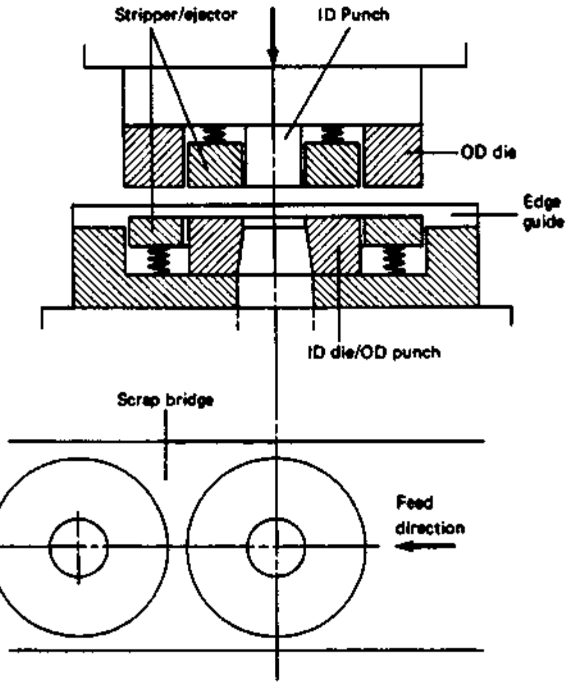

Fig. 2E3 A simple compound die that blanks and punches a part in one press stroke. The blanking punch contains the die for punching. *(from Schey, Introduction to Manufacturing Processes, McGraw-Hill, New York, 1987)* need for two or more separate press operations and is normally more accurate than two operations on separate dies. Compound die operations are also usually better from the cost and accuracy standpoints than operations with progressive dies. However, since compound dies are more complex and usually more expensive than several single-operation dies, a greater levels of production is usually required to amortize the die expense.

F. Sheet Metal Operations Performed on Equipment Other Than Presses

F1. ***rotary swaging*** - is an operation to reduce the cross-sections of tubes, bars, rods, and wires. It is accomplished by a rapid series of controlled blows from the die elements of a rotary-swaging machine. The machine, illustrated in Fig. 2F1, contains one

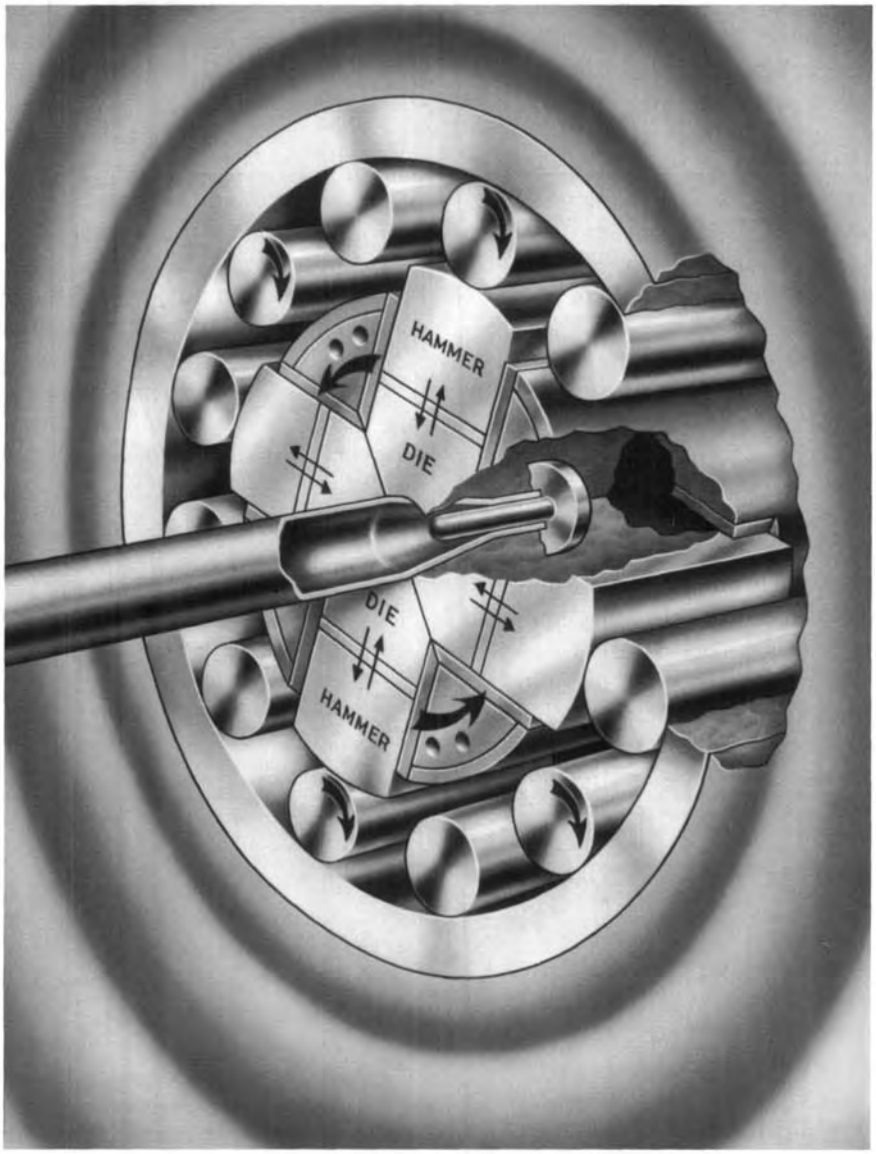

Fig. 2F1 A conventional rotary-swaging die reducing the diameter of a tubular workpiece. (*Courtesy Fenn Manufacturing Co.*)

or more pairs of opposed dies that strike the workpiece repeatedly as the machine spindle and the dies rotate. Centrifugal force throws the die members outward, where they encounter a series of rollers that force them to move inward and strike the workpiece. A common operating speed is 1000 blows per minute. The workpiece is inserted axially between the dies, held in place during the die blows, and then removed. For some workpieces it is necessary to have a mechanical assist or mechanical feed to move the workpiece against the taper of the dies. An internal mandrel may be used with tubular workpieces to control internal dimensions, to control wall thickness when it is reduced, to prevent collapse of thin walled tubing, and to form internal shapes.

The operation can produce tapers, pointed ends, and other shape changes, as well as diameter reductions. The method is also used to fasten fittings to cable, wire, and hose. Sewing machine needles, golf club shafts, and automotive torque tubes, are typical rotary-swaged parts. Tubing up to 14 in (375 mm) and bars up to 4 in (100 mm) in diameter have been rotary swaged[3].

F1a. ***stationary die swaging*** - is a variation in rotary swaging used when the workpiece does not have a round cross section. The operation is the same as conventional rotary swaging except that the dies do not rotate and are configured to conform to a non-round workpiece shape. The machine head does rotate, along with the rack of rollers, so that the rollers strike the back ends of the dies, driving them into the workpiece. The process has the same applications as conventional rotary swaging except that the workpiece develops a square, rectangular, or other non-round cross section.

F2. ***three-roll forming*** - See roll bending, section H2f.

F3. ***stretch forming*** - involves the stretching of a length of sheet metal (the workpiece) as it is wrapped around a form block. Stretching is achieved with two or more pairs of gripping jaws equipped to provide tension in the sheet. The combination of movement of the forming block and stretching of the material causes the material to be stressed beyond the elastic limit (typically, 2 to 4 percent total elongation). Simple tooling is involved because only a form block is required and there is no need for close alignment and fit of two die halves. Form blocks can be made of wood, plastics, and cast iron, as well as steel. The method is particularly applicable to large parts with small or modest amounts of forming, but it is not feasible for sharp contours. Tooling is inexpensive, so the method is justifiable for low-quantity production, despite the need to trim off material held in the gripping jaws. The method is best suited for producing shallow contours. Sheet aluminum components for aircraft are a common application, as are sheet steel body parts used in the truck and automobile industries. The method can also be used to make longitudinal bends in roll-formed or extruded sections.It is illustrated in Fig. 2F3.

F3a. ***stretch draw forming*** - is stretch forming when a mating female die also engages the workpiece on the form block. This permits more severe forming to take place. Automotive panels and door posts are made with the process. Stainless steel and titanium sheet, as well as the more common steel sheet can be processed. There is material loss and secondary trimming since the material in the grippers is trimmed from the workpiece, as in conventional stretch forming.

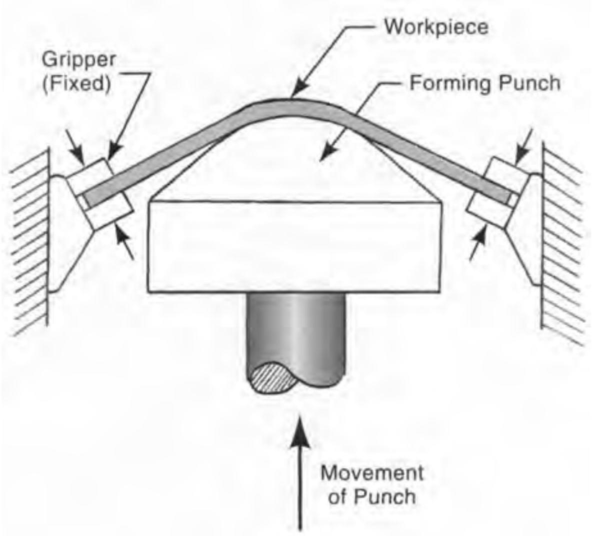

Fig. 2F3 Stretch forming with gripping jaws and a form block. Relative motion between the form block and jaws stretches the material just beyond its yield strength. *(from Schey, Introduction to Manufacturing Processes, McGraw-Hill, New York, 1987)*

F3b. ***stretch wrapping (stretch wrap forming)*** - uses the stretch principle and a rotary table to make stretch-formed parts without scuff marks on the workpiece surface. The rotary table allows the workpiece to be wrapped around the form block without sliding motion between the two. When reverse bends are needed, additional form blocks on the table are utilized. The process with three form blocks is illustrated in Fig. 2F3b. In this illustration, after initial stretching, the table rotates, creating a first bend in the workpiece. Additional movable blocks advance, and the table rotates in either direction, depending on the configuration to be made.

F3c. ***compression forming*** - is one of the family of stretch forming operations, but the force, instead of being used to stretch the material, is used to press it against the forming block. A roller or shoe, machined to match the cross-sectional shape of the workpiece, is used. The workpiece, which can be a metal strip or part with some cross-section, is pressed firmly, with hydraulic force, against the rotating form block. The compression forming method enables small radius bends to be made without exceeding the elongation limits of the outer portion of the workpiece. It also helps maintain the cross-sectional dimensions of the workpiece. The method is similar to stretch forming with a rotating form block except that only one end of the workpiece is gripped and the only workpiece stretching is that which results from the forming. Fig. 2F3c illustrates the process, which is used for vehicle bumpers and various structural members.

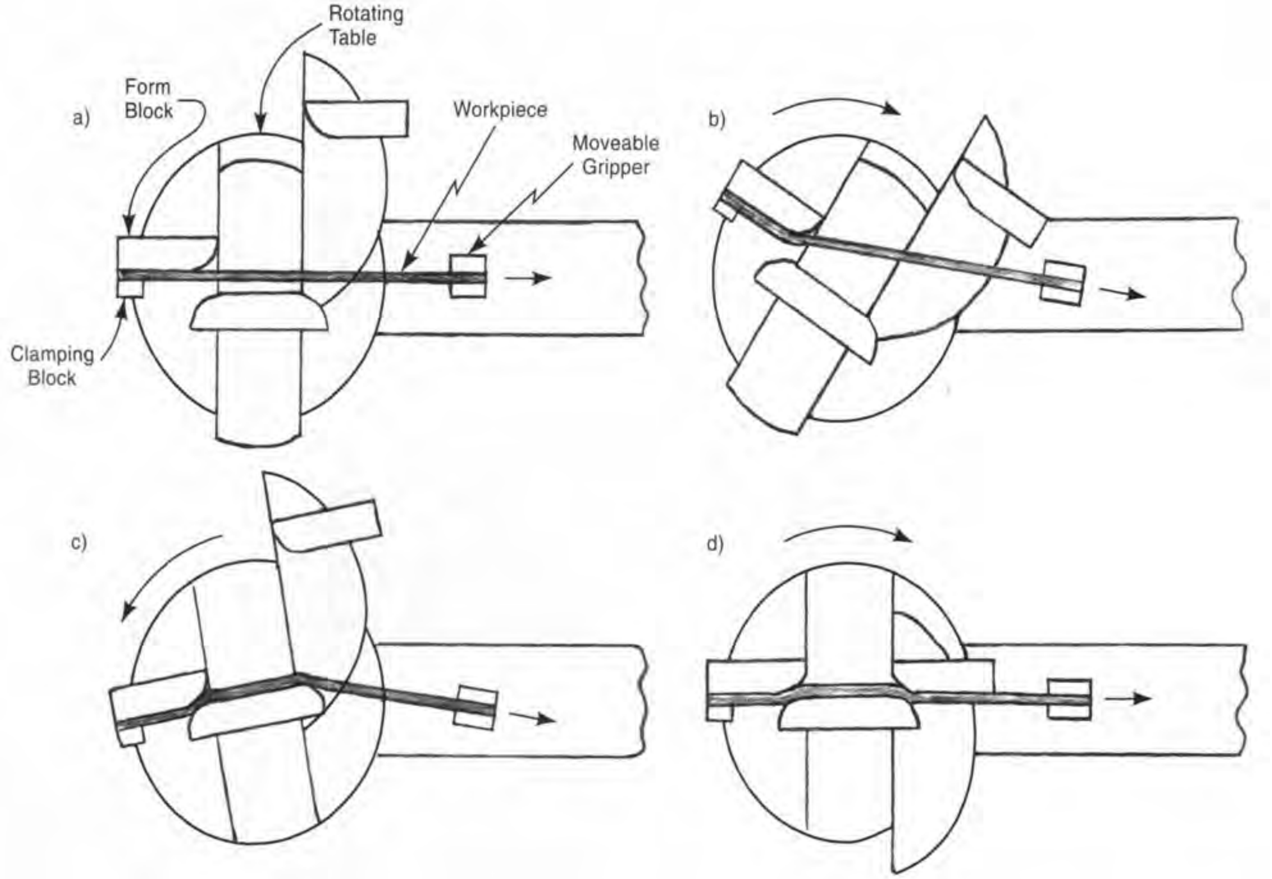

Fig. 2F3b Stretch-wrap forming of a part to make two reverse bends. The operation takes place on a rotary table with form blocks on slides. a) starting position, b) first forming operation, c) second forming operation, d) third forming operation.

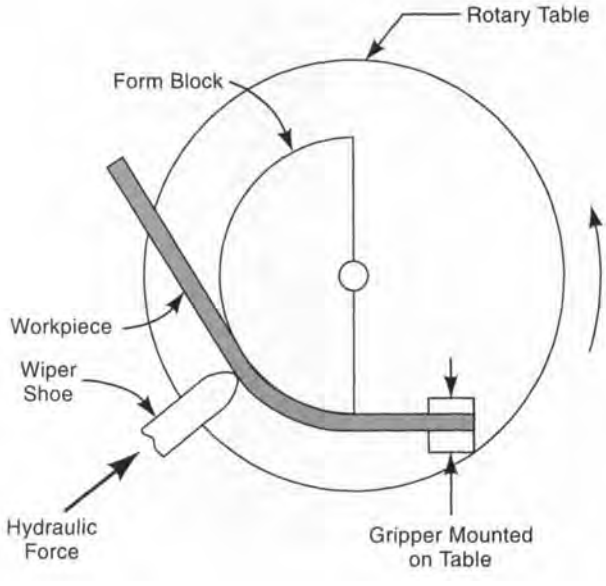

Fig. 2F3c Compression forming. The wiper shoe presses the workpiece against the form block. As the block rotates, bends are made in the workpiece.

F3d. ***radial-draw forming*** - is another stretch forming operation. It is similar to compression forming described above except that the workpiece is kept in tension. The method is used in bending extrusions and other workpieces with non-flat cross-sectional shapes. There are three points of application of hydraulic force: on the two ends of the workpiece and on the wiper shoe that presses the workpiece against the form block. Parts with a twist as well as a bend can be formed with this method by incorporating a twisting motion in one of the grippers, at the appropriate time during bending. See Fig. 2F3d.

F4. ***roll coining*** - is similar to rotary embossing, described below, in that the work is fed between two opposed rollers that have the desired surface shape. The process can be more rapid than press coining but normally is limited to small parts produced in large quantities from metals of lower yield strength. Interlocking fastener strips, made from jewelry bronze, are an example.[3]

F5. ***rotary embossing*** - Embossing, normally a press operation, can also be performed by passing the work material through a pair of opposed rollers that have the desired surface shape. The roller approach is particularly applicable with thinner metals and foils at high production levels, when continuous strip is fed to the rollers and the embossed parts are separated from the strip in a subsequent operation.

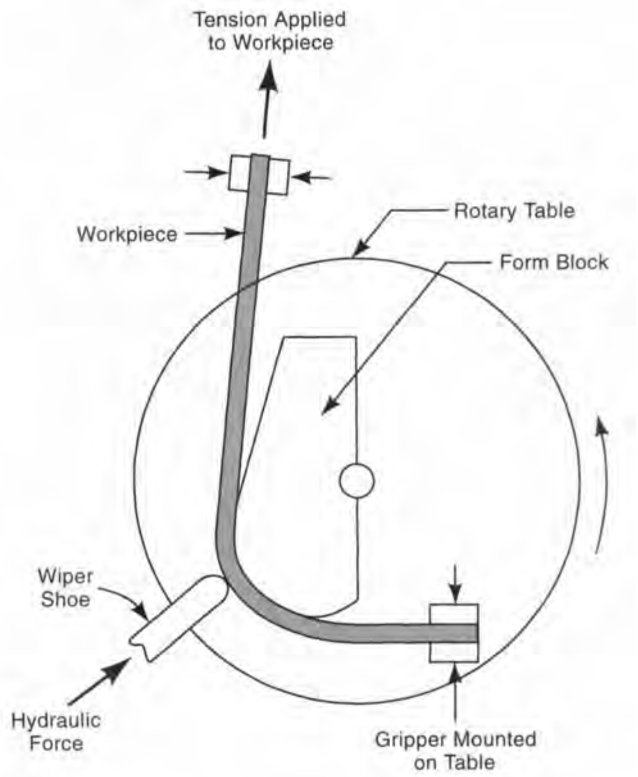

Fig. 2F3d Radial-draw forming. Similar to compression forming but the workpiece is stretched as it is pressed against the rotating form block.

F6. ***metal spinning*** - is an operation that forms a disc of sheet metal into various seamless circular shapes by pressing it against a form while it rotates. The disc is clamped against a form block of circular cross section, held in the headstock of a lathe, so that the two rotate together. As the disc rotates it is pushed with localized pressure against the form block, with suitably shaped spinning tools, and gradually assumes the shape of the form block. The motion and pressure of the pressing tool can be provided manually or with mechanical power. This method is used in the production of various circular sheet metal objects such as reflectors, lamp bases, bowls, bells, cooking pans, funnels, metal drinking glasses, and conical parts. Tooling is very simple; form blocks, called "chucks," can be made from wood, wood fibre, cast iron, steel, or other metals. The operation is therefore economical for prototypes and low-quantity production, particularly when manually powered. Some deeply-formed parts may require several passes, sometimes with blocks of different shapes, before the part is completed. With some metals, annealing between successive spinning operations is required. Intermediate form chucks are sometimes referred to as "breakdown chucks."

For parts that are narrower at the open end than at the closed end, and other parts with re-entrant contours, a one-piece chuck would be trapped in the part after forming. These shapes can often be produced, however, if a segmented chuck is used, ie., one that can be removed, piece-by-piece, after the spinning is completed. Another approach, more common with higher production levels, is to use a smaller diameter, off-center, contoured roller, that can be withdrawn from the workpiece after spinning.

Spinning may be combined with deep drawing if the part has considerable depth. Deep drawing takes place first and the part is then spun to its final shape.

F6a. ***manual spinning*** - Metal spinning can be performed manually as long as the metal used is thin and ductile enough to respond to manually-applied pressure. Pressure is applied to the workpiece by the rounded end of a wooden or metal (eg., aluminum-bronze) lever held by the machine operator but supported by a tool rest on the lathe's cross slide. The operator often also uses a "back stick", a second tool to guide the workpiece material and prevent wrinkling. Lubricants such as: grease, petroleum jelly, beeswax, or brown laundry soap, facilitate the operation. Tooling costs are very low, but skill is required in order to assure uniform results. Sheet steel up to about 1/8 in (3 mm) in thickness can be formed by manual spinning. Fig. 2F6a illustrates the process schematically.

F6b. ***power spinning , "flow turning" or "shear spinning"*** - refer to a variety of methods that apply powered forming pressure to the spinning process. Rollers are usually used to contact and shape the workpiece. These methods work the material more severely than hand spinning and reduce its thickness. Heavier parts can be produced in this way and the operation, with a metal form block, can be applicable to high production levels. However, shapes may be more limited than those attainable with manual spinning. With repeated operations, closed-end cylindrical parts can be produced. The method has been applied to workpieces as thick as 1 in (25 mm) and 240 in (6 m) in diameter[3]. Typical parts produced are: conical light fixtures, air deflectors, and domed tank ends. In shear spinning, the workpiece metal is subjected to shearing deformation, being pushed ahead of the forming roller and compressed between the roller and the forming block. The operation is illustrated in Fig. 2F6b.

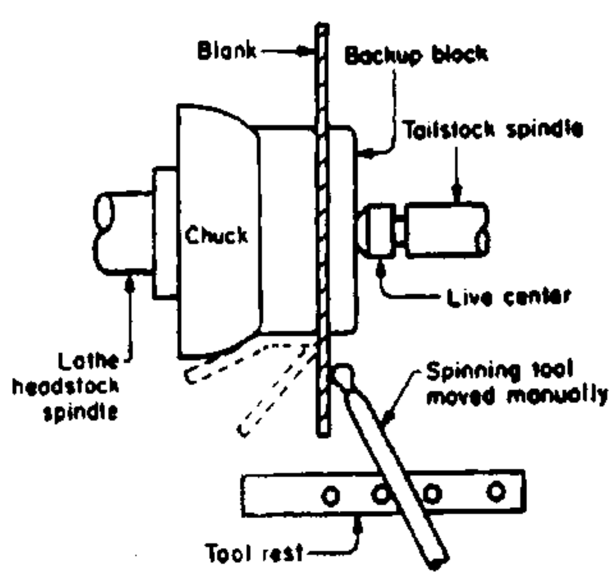

Fig. 2F6a Schematic illustration of manual metal spinning. *(from Bralla, Design for Manufacturability Handbook, McGraw-Hill, New York, 1999)*

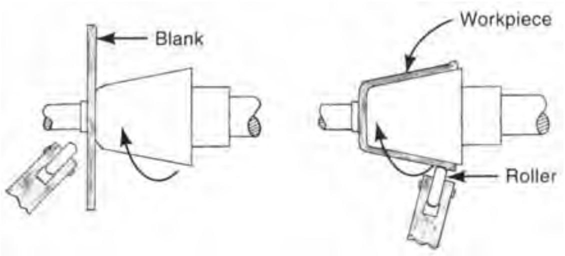

Fig. 2F6b Schematic illustration of power spinning, also known as "shear spinning" or "flow turning".

F7. ***roll forming (contour roll forming)*** - is a method for forming tubing, channels, pipe, roof gutters, siding and roof panels, metal joists and studs, metal picture frames, curtain rods, toy train tracks, decorative strips on railroad cars and trucks, and other shapes of constant cross-section from strip material. The strip is guided through a series of contoured mating rollers, mounted in tandem, which progressively make longitudinal bends in the strip as it passes through the sets of rollers, called "stands". Quite complex shapes can be produced in very long lengths. Only bending takes place; the stock thickness does not change. Typically, from one to 40 stands are employed. The process is an alternative to extrusion in some applications, and is illustrated in Fig. 2F7. Steel and other sheet metals are processed with the method including prepainted and preplated metals in thicknesses from about 0.005 in (0.13 mm) to 3/4 in (19 mm) but standard machines are limited to about 5/32 in (4 mm) thick steel. All metals that can be bent by other methods can be roll formed. The operation is rapid [about 100 ft (30 m) per min and sometimes much faster], and suited to high-volume production. Roll sets must be changed when the section to be produced is changed. When a particular section requires welding, a resistance welding station can be incorporated at the end of the forming rolls. Notching, piercing, embossing, and other operations can be performed if suitable equipment is added to the roll forming line, though these usually slow the roll-forming operation. Straightening rollers or guides may be placed at the exit end of the machine to correct for any twist distortion that may occur in the operation. Flying cut-off equipment can be placed at the end of the line of rollers to cut the workpieces to the desired length.

F7a. ***roll forming of tubing and pipe*** - When tubing and pipe are made by roll forming, a welding unit is incorporated in the process. The metal strip, as it moves through the machine, is formed into a circular cross section. The edges of the strip are brought together as they exit from the forming rolls and are arc or resistance welded together. Typically, 10 pairs of rollers are required to bend, finish, and size the tubing. The welding station normally limits the speed of the operation. An interlocking seam joint can also be produced (with thinner sheet) by the rolling operation. Welded tubing of from 1/4 to 24 in (6.3 to 625 mm) in diameter can be produced[4]. Straightening and cutoff equipment are normally part of the production line.

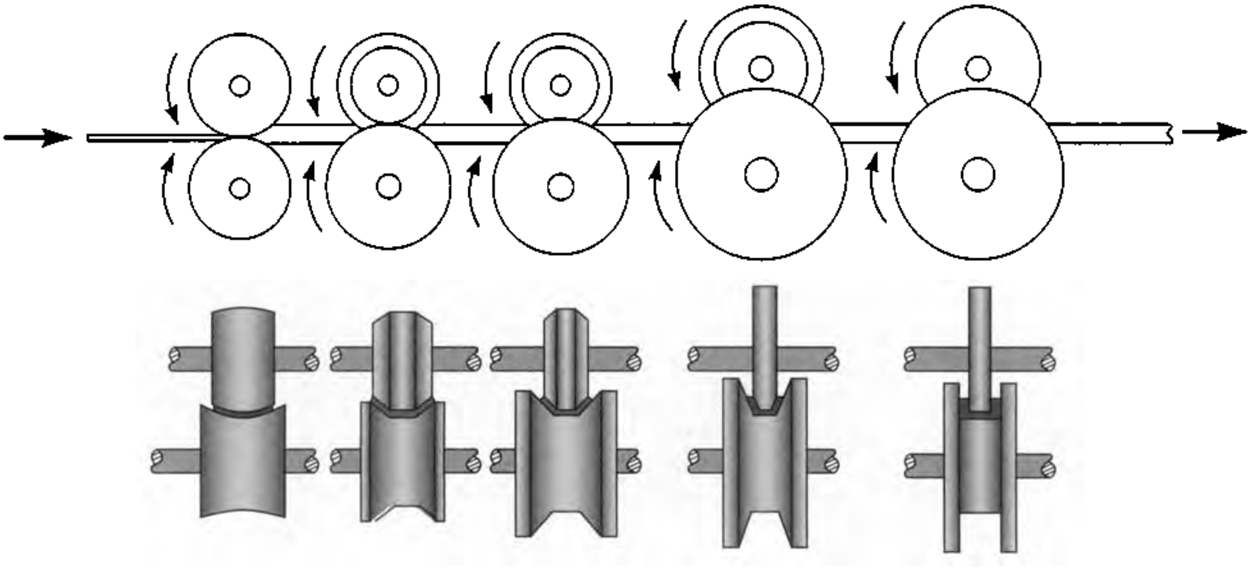

Fig. 2F7 The stages of contour roll-forming a U-shaped channel.

G. Wire Forming Operations

G1. ***wire forming*** - Components made from bent and formed wire are useful when an open configuration, such as those used in baskets and fan or machine guards, is required. In many other applications, wire can provide an economical configuration, sometimes with a spring effect incorporated and sometimes as a rigid member. Bending methods used for sheet metal, rod, tube and other cross-sections are normally also applicable when the workpiece material is wire. Other operations that can be performed on wire include swaging, cold heading, resistance, arc or gas welding and threading.

G1a. ***manual forming of wire parts*** - Wire can be bent with hand-powered bending brakes, kick presses, or various fixtures with hinged or pivoted elements, since forces required are low. Bending tools similar to tube benders can be used. Hand-bending may be applicable when quantities are limited.

G1b. ***wire forming in power presses and special machines*** - All bending operations performed by presses, press brakes, four-slide machines, and other equipment can be performed, with suitable tooling, on wire workpieces. See sections C1, D1, D2, D12, H2, I2 and K. Additionally, wire is formed into springs of various shapes. (See *springs*.) In high production situations, the wire is fed from continuous coils and is formed and cut off automatically.

G2. ***forming in four-slide machines*** - is applicable to parts formed from wire or sheet metal strip. Four-slide machines have a forming area with four press slides set 90 degrees apart and driven by cams. There is also a center post that can be shaped to facilitate forming. Tools on the slides are designed to blank, pierce, notch, bend, form, emboss, and cut off the wire or strip as it progresses through the machine. Mechanisms feed the material (from coil stock) and eject the workpiece where appropriate. Rollers are often positioned on the machine to straighten the stock prior to the blanking or forming operations. One or two small, horizontal punch presses can also be mounted on the machine upstream from the four-slide area to perform additional operations.

Fig. 2G2 shows the layout of a typical four-slide machine for forming one typical part. Very complex

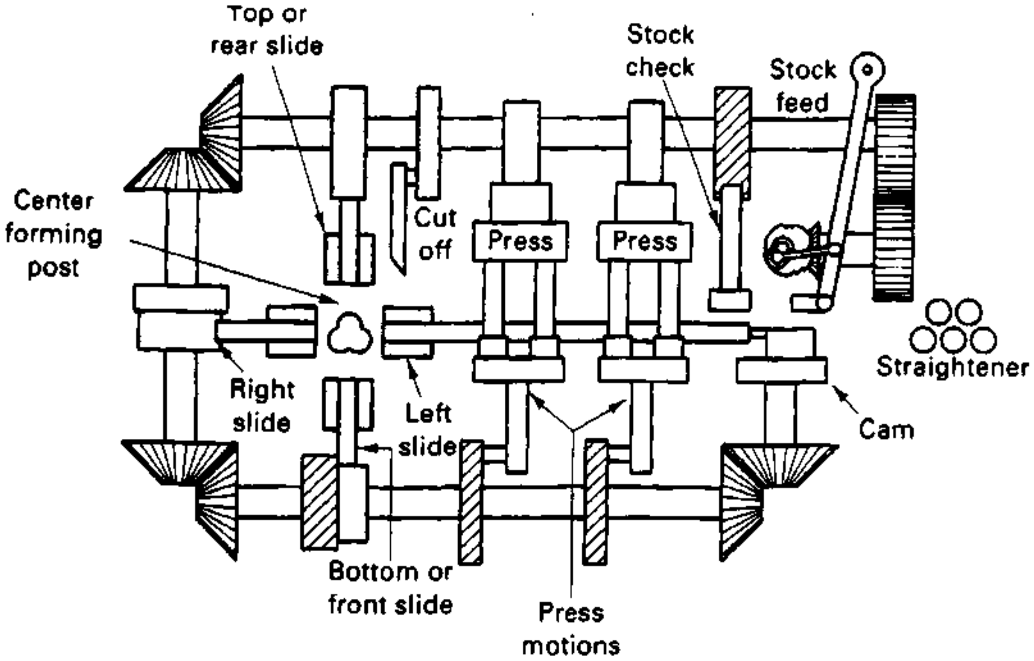

Fig. 2G2 Schematic view of a four-slide machine. Various blanking, punching, forming, and cut-off operations are performed as the stock passes through the machine (from right to left in this illustration). *(Courtesy U.S. Baird Corporation, Stratford, CT.)*

parts can be produced with this process and they are often completely fabricated in one four-slide operation. Production is rapid, but large lot sizes are needed because set up is lengthy. Resistance welding, and drilling and tapping, are sometimes added to the operation by mounting the appropriate head on the machine. Four-slide parts, though often of quite a complex configuration, are generally on the small size because of machine limitations. Deep draws and severe coining are not normally found. Clips, rings, hooks, bobby pins and electrical contact and switch parts are made with the process.

G3 ***spring forming*** - see *springs*

G4. ***Turk's-head rolling of wire*** - is used to change the cross-section of round wire. Rectangular, square and special shapes can be imparted to the wire by passing through opposed rollers arranged so that the opening between them is the shape of the cross-section desired. Fig. 2G4 illustrates the roller arrangement used to produce square wire. The operation is rapid, up to about 600 ft (180 m) per minute. Contoured cross-sections can be produced so long as the shape desired can be ground into the rollers.

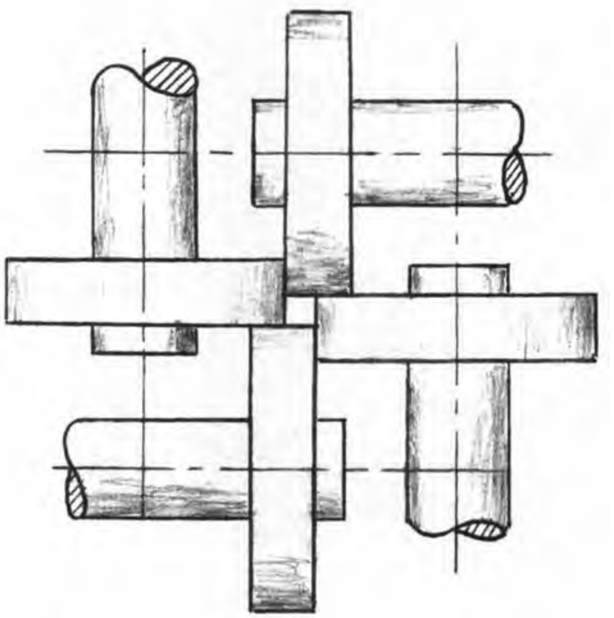

Fig. 2G4 Turk's-head rolling of wire into a rectangular cross-section. By moving the rollers to slightly different positions, rectangular wire can be rolled. Contoured rollers can be used to make wire of other cross-sections.

H. Tubing and Section Operations

H1. ***tube spinning*** - Tubes can be spun to provide tapers or flanges by using metal spinning methods similar to those used in spinning sheet metal. Other uses are to thin the walls and increase the strength of tubular members. Internal mandrels are normally used to provide support for the workpiece metal. Hollow mandrels external to the tubing can be used when the tubing is expanded or flared at the end. All ductile metals can be processed with this method. Two different methods can be employed: forward tube spinning and backward tube spinning.

H1a. ***forward tube spinning*** - sometimes called tube stretching, is a means for increasing the depth of cooking pots or the length of cylindrical parts or tubing. The diameter is constant. The power-spinning method is equivalent to shear spinning, and forces the metal to flow axially along a mandrel, increasing the length of the workpiece while decreasing the thickness of the sidewalls. The forming tool moves in the same direction as the lengthening of the workpiece, away from the headstock of the spinning lathe, as illustrated in Fig. 2H1a.

H1b. ***backward tube spinning*** - is the same as forward tube spinning except that the forming tool moves in the direction opposite to that of the expansion of the workpiece. ie., it moves toward the headstock of the spinning lathe and the workpiece metal flows away from the headstock as shown in Fig. 2H1b. This arrangement enables the tool travel distance to be less than the eventual length of the workpiece because the workpiece material flows along the mandrel beyond the forming roller. However, distortion can take place in the workpiece.

H2. ***tube and section bending***

H2a. ***draw bending*** - is used in bending tubing, sections, and bars. The workpiece is held against a bending form by a shaped clamp. As the bending

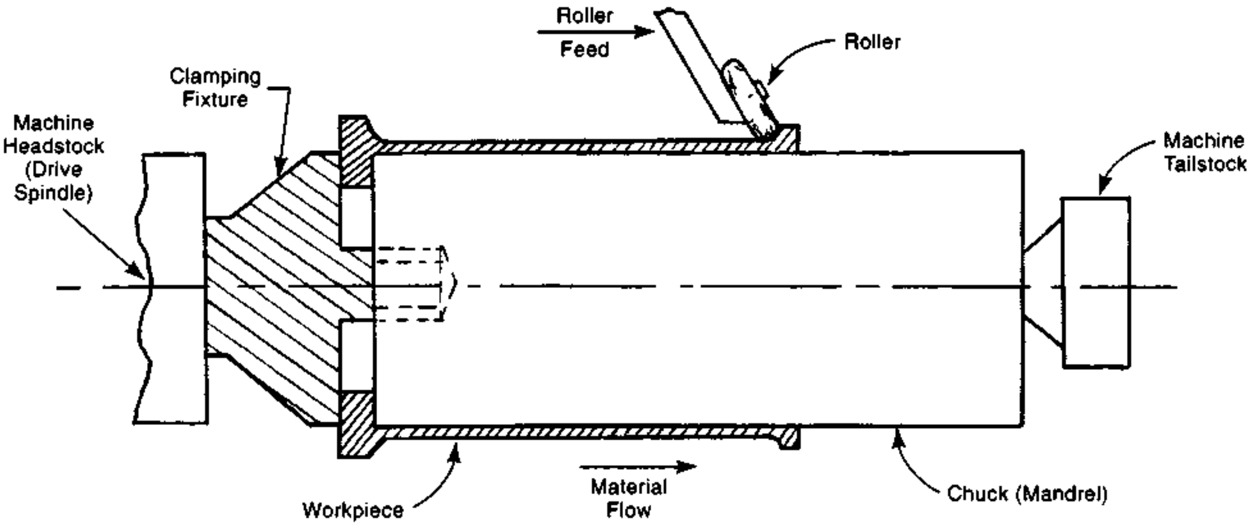

Fig. 2H1a Forward tube spinning. The illustration shows the second or third pass of several required, the number depending on the metal used and the length and wall thickness desired. An opposing roller used to balance forces is not shown in this illustration.

form and clamp rotate together, the workpiece is pulled or drawn around the form and against a pressure die whose form also matches the cross section of the workpiece. The pressure die can be either stationary or movable along its longitudinal axis. An accurate bend is produced by this method, which is illustrated in Fig. 2H2a. Internal mandrels may be used to prevent or minimize flattening. Typical flexible mandrels are illustrated in Fig. 2H2a-1. The operation is often power driven, and ultrasonic

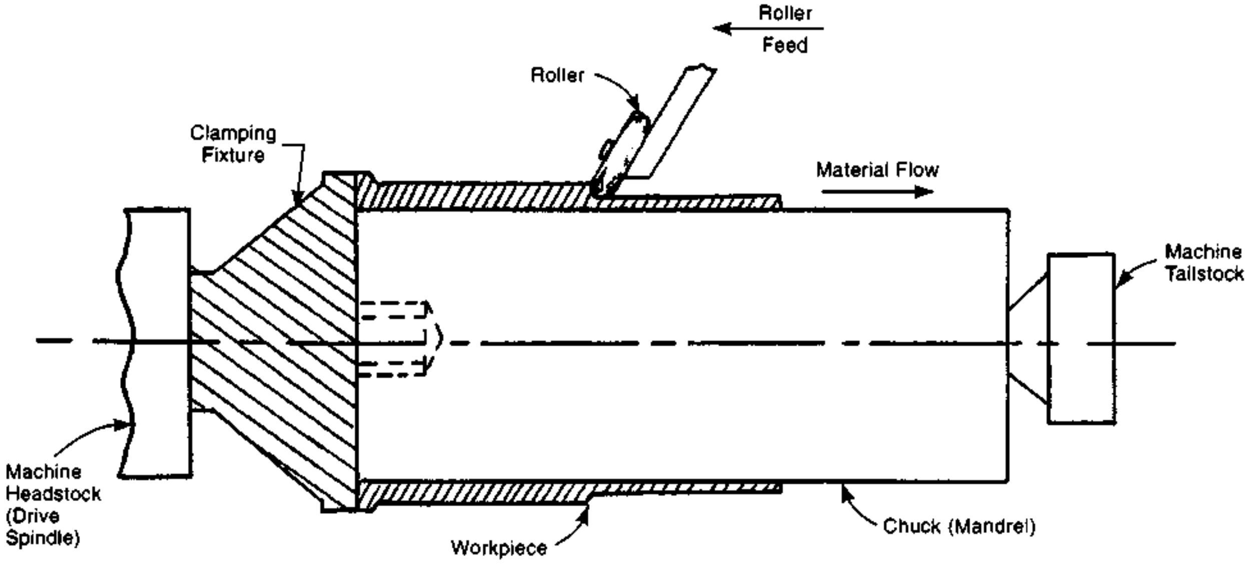

Fig. 2H1b Backward tube spinning. The material flows in the opposite direction from that of the pressure roller. The illustration shows the second pass of the roller. An opposing roller used to balance forces is not shown in this illustration.

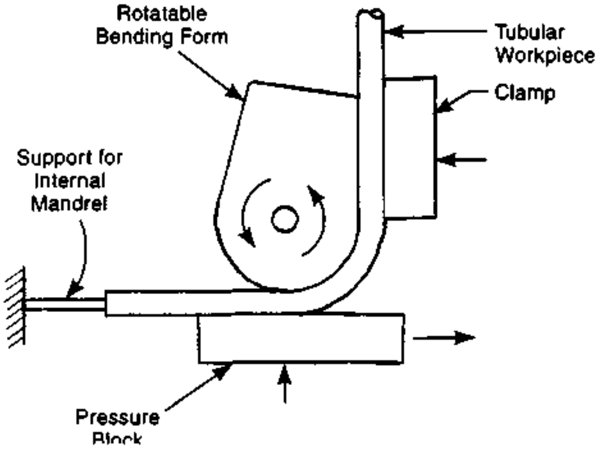

Fig. 2H2a Draw bending of tubing. The form block rotates with tubing clamped to it. A mandrel is often used to prevent collapse of the tubing.

vibration may be applied to the tooling or workpiece to reduce friction. The method is applicable to tubing of 1/2 inch to 10 in (12 to 250 mm) in diameter and bends to 180 degrees. Draw bending provides better control over the workpiece shape than other tube bending methods. With use of a mandrel and care in the operation, thin-walled tubing can be bent with little wall collapse to a center line radius as small as one tube diameter.

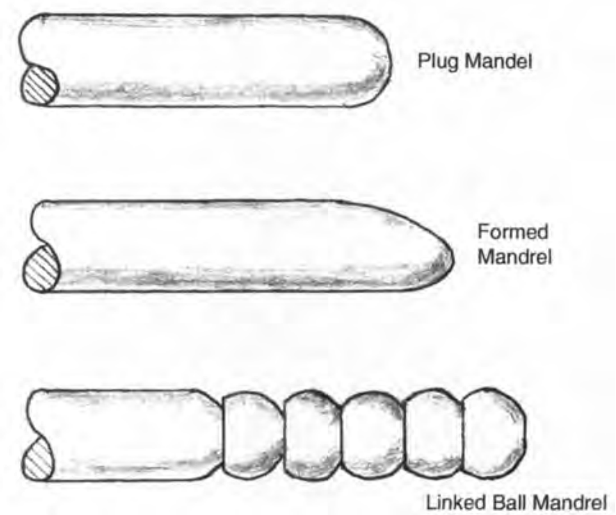

Fig. 2H2a-1 Mandrels used in tube bending to prevent collapse of the tubing during bending. The linked balls in the mandrel shown at the bottom can pivot to provide support to the tubing wall throughout a tight precision bend.

H2b. ***compression bending*** - is similar to draw bending, but the forming block and clamp do not rotate. Instead, the pressure die is replaced by a wiper shoe or fitted roller which moves along the periphery of the stationary bending form, causing progressive bending of the workpiece. No internal mandrel is used. Except for the outer surface, the tubing is subjected to some compressive stress. The operation is normally manually powered. The method is less applicable to thin-walled tubing than draw bending.

Center-line bend radii as small as about 2.5 times the tube diameter are possible, but 4 times is a more common minimum. Bends in tubing to 170 degrees are feasible. The method is useful when multiple bends in a workpiece are close together, but bends may have more distortion than draw bends made with a mandrel. Painted tubing can be compression bent because there is little stretching of the outer surface. Fig. 2H2b illustrates the process.

H2c. ***ram-and-press bending*** - is a method applicable to tubing, bar, and other sections, and is illustrated in Fig. 2H2c. A forming block is attached to the ram of a hydraulic press. Wing dies below the ram hold the tubing and pivot to wrap it

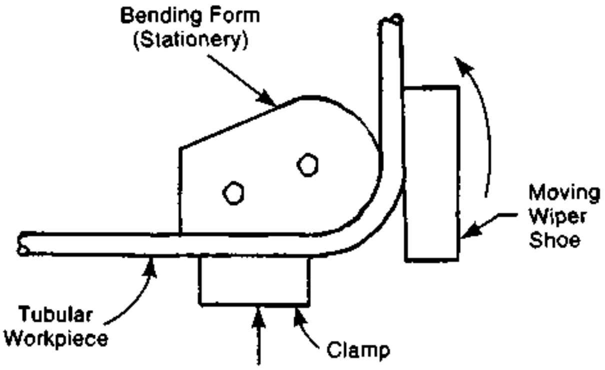

Fig. 2H2b Compression bending of tubing. A moving tool compresses the workpiece against a stationary form. *(from Schey, Introduction to Manufacturing Processes, McGraw-Hill, New York, 1987)*

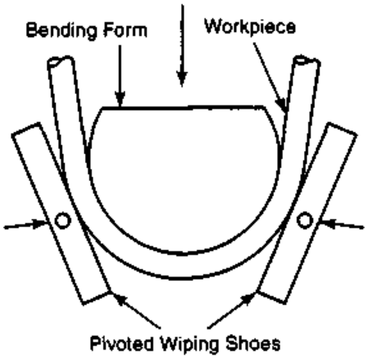

Fig. 2H2c Ram-and-press bending. (*from Bralla, Design for Manufacturability Handbook, McGraw-Hill, New York, 1999*)

around the forming block as the press ram descends. A wiping action of the wing dies controls the flow of metal and provides a compression bend. The length of the press stroke determines the angle of bend. Typically, hydraulic presses, in which the press stroke can be stopped at any point, are employed. No mandrel is used. There is less control over the workpiece than that provided by draw or compression bending, but the operation is relatively rapid. This method can be used to make successive bends if the tubing is repositioned between press strokes. Bends to 165 degrees can be made. Automobile exhaust pipes and other tubing components used in large quantities are commonly bent by this method.

H2d. ***stretch bending*** - The stretch forming method for sheet metal, described above in section F3, also is applicable, with variations, for bending of tubing and other sections. The workpiece is stretched longitudinally to the yield point and then is wrapped around a bending die or form. A mandrel is not needed, but the method is not rapid. It is applicable to bends of non-uniform radius. More than one low-angle bend can be made in one operation. The ends of the workpiece may have to be trimmed off after the bending operation because of distortion from the gripping jaws that provide the stretching tension. One common application of the process is the bending of structural members made from angle or channel sections when such members require a curved shape. The frames of rockets and other aerospace vehicles are bent this way. See Fig. 2H2d.

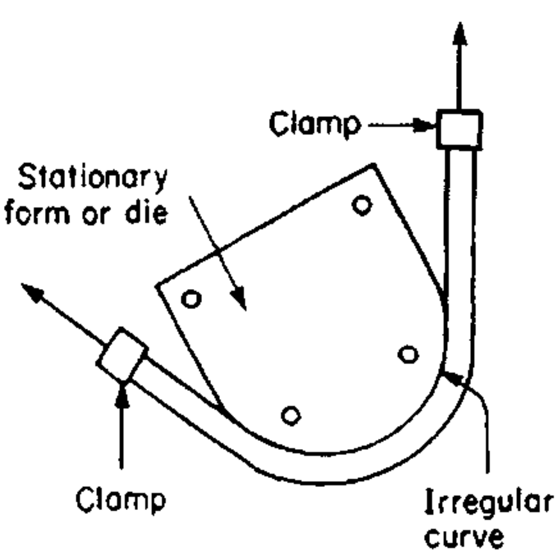

Fig. 2H2d Stretch bending of tubing. (*from Bralla, Design for Manufacturability Handbook, McGraw-Hill, New York, 1999*)

H2e. ***wrinkle bending*** - is a method for bending large, heavy-wall, tubing or pipe. It is applicable to field conditions since it can be done by hand with no special tooling. One side of the tubing is heated locally by gas torch to the point where the tubing wall softens. A compressive force is applied to the pipe, causing the soft area to wrinkle and the tubing to shorten on that side, producing a shallow bend. The operation is repeated at another point a short distance from the first wrinkle and then successively until the desired degree of bend has been achieved.

H2f. ***roll bending*** - is a means of putting gentle bends in tubing, pipe, bars, rolled or extruded shapes, plates and sheets. It is illustrated in Fig. 2H2f. Usually, three parallel rollers are provided in a triangular arrangement with the lower two being mechanically driven. The third is placed above and between them at a height that can be varied, depending on the diameter or thickness of the workpiece and the desired degree of curvature. This upper roller usually is not power driven. Sometimes, more than three rollers are employed. When workpieces

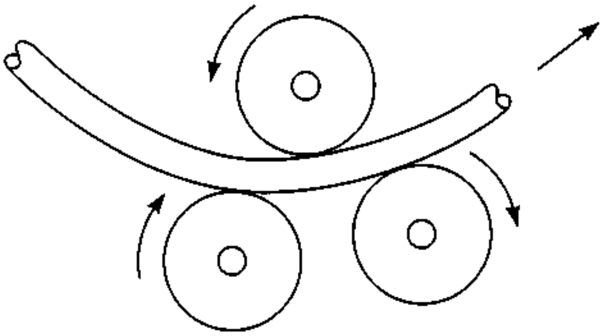

Fig. 2H2f Roll bending of tubing.

other than sheets or plates are bent, the rollers are grooved to fit the cross section of the workpiece. When used for pipe or tubing, the process is limited to heavier-walled workpieces with bend radii usually not tighter than 6 times the diameter though 4 times is possible. Pipe up to 8 in (200 mm) in diameter can be bent with this method. Rings and coils can be produced. When the process is used with sheet metal, a common application is the production of cylindrical parts.

H2g. ***roll extrusion bending*** - This method is used for large, heavy-walled pipe. One wall of the pipe is swaged from the inside, causing it to elongate and the pipe to bend. Pipes of 5 to 12 in (125 to 300 mm) can be bent with this method to a minimum bend radius of 3 times the diameter. Successive bends in different planes can be made with this method but a straight section must be allowed between bends.

H2h. ***bulging, mechanical*** - is an operation that expands a portion of a tubular or cylindrical part. When done mechanically, a segmented die - with segments held together by springs - is inserted into the tubular part. During the press stroke, a tapered punch pushes the segments apart and they, in turn, push out the walls of the workpiece. The process produces a patterned expansion (flat spots around the tubing) because of open spaces between the die segments when they are expanded. These flat spots can be minimized by rotating the segmented die and repeating the operation. However, the method is otherwise straightforward and well suited to production conditions.

H2i. ***bulging, hydraulic*** - expands tubing, pipe, or a cylindrical part, by applying internal force with a pressurized liquid or an elastomer (low-durometer rubber or polyurethane) punch. The workpiece is contained by a die that is split so that the bulged part can be removed after the operation.

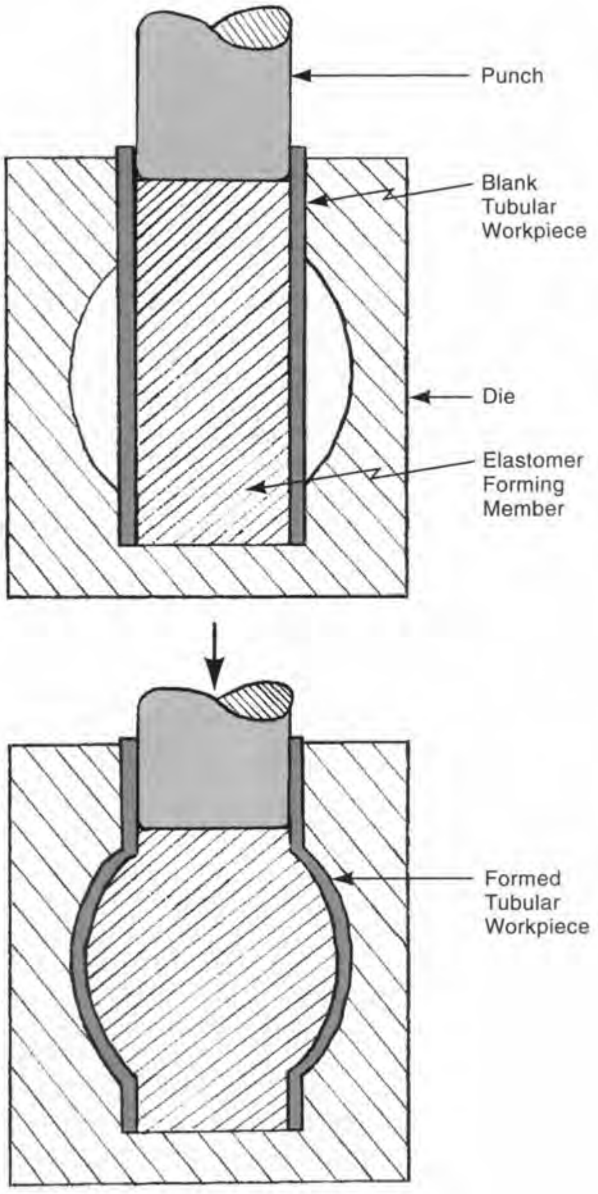

Fig. 2H2i Hydraulic bulging of tubing with an elastomer. The elastomer is deformed by the descending punch and forces the tubular workpiece outward into the die.

With direct hydraulic forming, the tubing is filled with water, sealed at the ends, placed in the die and pressurized. Water pressure forces the tubing walls outward to conform to the shape of the external die. With the other variation, an elastomer punch is commonly used since there are no leakage problems with it and it is wear resistant. As the press ram bears against it, the elastomer deforms but does not compress significantly; the compressive force of the press is transferred outward, forming the workpiece. When the press ram withdraws, the material springs back to its original shape and can be removed from the workpiece. Fig. 2H2i illustrates hydraulic bulging with rubber or polyurethane.

H2j. ***other methods of bulging tubing*** - Most of the high-energy-rate forming methods described in section J can be employed to expand tubular workpieces.

I. Non-sheet Forming Operations

I1. ***shearing of bars and other non-flat shapes*** - Alligator shears (see Section C1b), are commonly used for shearing bars and other sections to length. Guillotine shears, vertical presses, permanently fitted with short shear blades, are another alternative in shops where there is much bar shearing. The blades of guillotine shears may be notched or grooved to aid in maintaining the location of the workpieces during cutting.

I2. ***cold heading*** - a process for ***upsetting*** (enlarging and shaping) the end of a rod, wire, or bar. It is commonly used for the production of bolts, rivets, nails, and screws, and is illustrated in Fig. 2I2. One or more blows of a heading tool against the end of a rod or bar displace some portion to change its shape and enlarge its diameter. Material is usually fed from coil stock. The material upset is that portion of the workpiece that extends from a stationary die. A series of blows with different punches may be required in order to produce the desired head shape. As can be seen in Fig. 2I2, upsetting can take place in the punch, in the die, in both the punch and die and between the punch and die. Production rates can exceed 500 parts per minute. The part is cut off by shearing either before or after heading, and other operations may be performed after heading, often automatically when the production quantities are large. Machining, bending, and flattening are examples, but thread rolling is probably the most common accompanying operation. No material is wasted in the operation, burrs are not produced and grain flow provides improved mechanical properties. Although fasteners are the major application, a wide variety of parts of different shape can be formed in this process. Valves, knobs, rollers, shafts, spark-plug bodies, gear blanks, and hose fittings are examples. Upsetting within the length of the part rather than the ends is also possible. Cold heading is particularly economical when production quantities are large. The operation can be performed upon heated workpieces if the material involved is difficult to form or work hardens quickly. The operation then is referred to as warm heading. High carbon steels and austenitic stainless steels may be processed with this approach.

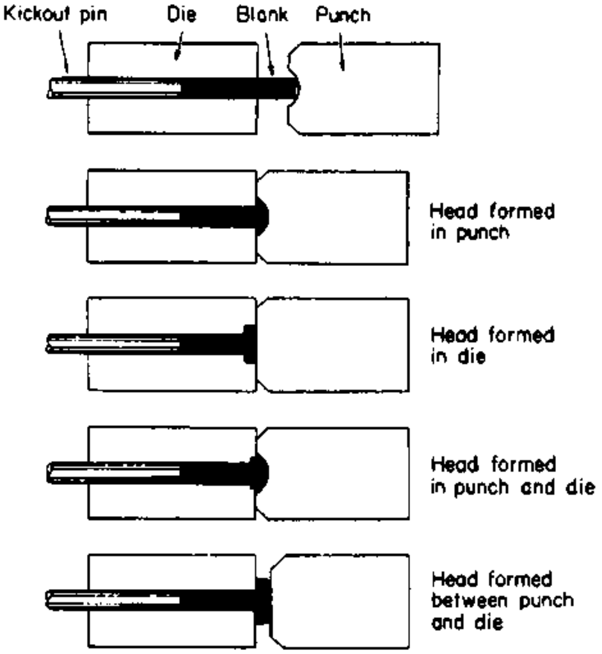

Fig. 2I2 Cold heading. Upsetting the end of the workpiece material can be achieved by a moving punch, in the stationary die, or in both punch and die and between the punch and the die. *(Courtesty National Machinery Company)*

I3. ***thread rolling*** - See screw threads.

I4. ***impact/cold extrusion*** - forms a part of some length by plastic flow of metal under compressive stress into an opening of limited size. The process is normally referred to as *impact extrusion* when non-ferrous metals are involved and *cold extrusion* when the workpiece is ferrous. A blank is placed in the die and a punch puts pressure on the blank, causing metal to flow in the desired direction. The press used can be either mechanical or hydraulic. With the rapid force of a mechanical press, the term, "impact extrusion" is appropriate. There are three varieties of the process: forward extrusion, backward extrusion and combined extrusion. Impact/cold extrusion produces parts with smooth surfaces, with no loss of material in the form of machining chips. The process is fairly rapid and is suitable for mass-produced components used in quantities of 100,000 pieces per year or more. Cylindrical and near-cylindrical shapes are typical parts made with the process. Collapsible metal tubes are made with the process. Aluminum, copper, lead, and magnesium alloys are the most commonly extruded, along with low and medium-carbon steels.

I4a. ***backward extrusion*** - In this process, shown in Fig. 2I4a, a metal blank is placed in the die, and the metal is compressed by the punch and forced to flow backwards around the punch to form a hollow object. The side wall thickness of the part depends on the amount of clearance between the punch and the die. Depending on the shape of the bottom of the punch and the bottom of the die, various shapes at the closed end of the part can be produced. The thickness of the base depends on the press stroke and is independent of the wall

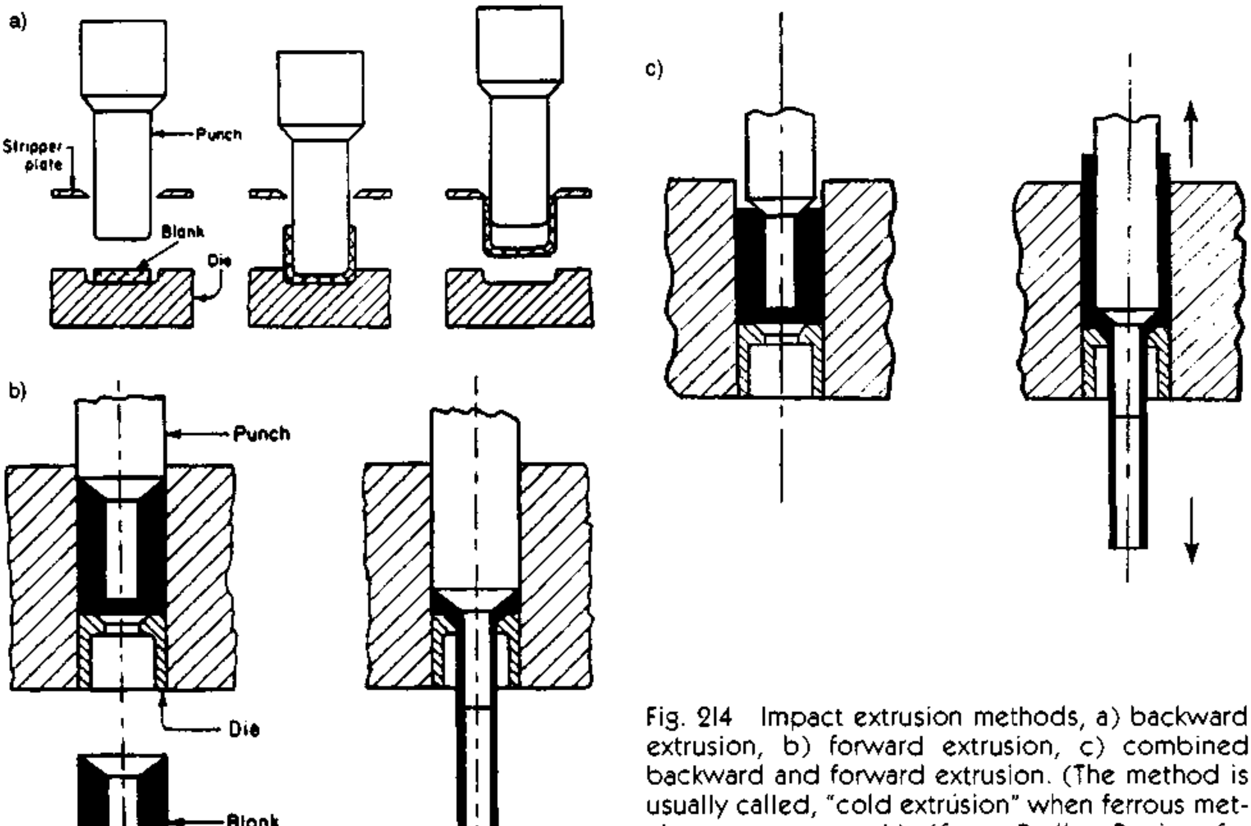

Fig. 2I4 Impact extrusion methods, a) backward extrusion, b) forward extrusion, c) combined backward and forward extrusion. (The method is usually called, "cold extrusion" when ferrous metals are processed.) *(from Bralla, Design for Manufacturability Handbook, McGraw-Hill, New York, 1999)* thickness. The process is most frequently used with softer non-ferrous metals such as zinc, lead, tin, and aluminum to form cans and collapsible tubes for toothpaste, paint pigments, shaving cream, and other materials.

I4b. ***forward extrusion*** - In this process, sometimes called the ***Hooker process,*** the workpiece metal flows forward (normally downward) through an orifice rather than upward around the punch. A close fit between the upper portion of the punch and the die prevents the upward flow. Hollow parts are produced by providing clearance between lower portion of the punch and the die orifice. The process differs from conventional extrusion described above in section A3 in that, with this method, a discrete part is produced that has one end closed or is of a particular shape. However, open- or closed-end tubes can be produced with the process. The operation is also sometimes part of a sequence that also involves cold heading. Preformed blanks are often used to provide a desired shape in the finished part. Fig. 2I4 (view b) shows the process.

I4c. ***combined extrusion*** - is both forward and backward impact extrusion at the same time on one part, as shown in Fig. 2I4c. The backward extrusion can have a different solid or hollow shape than the forward extrusion. Typical parts have a central flange with different cross sectional shapes above and below it. Fig. 2I4 (view c) illustrates the process.

J. High-energy-rate Forming Methods

HERF methods, sometimes referred to as HVF (*high velocity forming*) methods are useful in the forming of large workpieces and difficult-to-form metals through the application of large amounts of energy in a very short time period. These processes are characterized by the high velocity of the forming action (more than 50 feet per second[4]) and the use of a pressure wave rather than a forming punch to effect the change in the workpiece (except for pneumatic-mechanical forming described below). Energy is supplied by explosive charges, detonation or combustion of gas mixtures, spark discharge, exploding bridge wire, electromagnetic pulses, and the sudden release of compressed gas. Water may be used to transmit the shock wave. Except for pneumatic-mechanical forming, tooling and equipment are relatively simple and less expensive compared to that required with more conventional forming methods. The processes are often advantageous for prototype and limited quantity production. However, safety aspects of the process used must be dealt with.

J1. ***explosive forming*** - uses an explosive charge to provide the energy necessary to effect the forming operation. Normally, the explosion takes place in water and the water pressure then forces the workmetal against the die walls, but rubber, sand, glass beads, oil, molten salts, and air can also be used as a pressure transfer medium. (Air is an inefficient medium.) The pressure wave travels at several hundred feet per second. Only a female half die is required to form depressed shapes. For short-run production, dies made of concrete, fiberglass/plastic, sheet metal, or cast epoxies can be used. Another advantage is that there is little or no springback after the operation. Fig. 2J1 illustrates explosive forming, a) with a water medium and free forming and b), with a confined system. One common application is the forming of steel plate components for large storage tanks. Blanks to 13 ft (4 m) in diameter have been formed with this method. The method is useful when the workpiece material, eg., stainless steels, have work hardening properties. Most such operations are performed outdoors. The tank used to hold the medium must be strong enough to withstand the force of the explosions. The explosive charge is sometimes affixed to the workpiece ("contact operation") and sometimes separated from the workpiece ("standoff operation") as illustrated in Fig. 2J1.

With smaller parts, a confined system can be used. This is one which has a die that completely encloses the workpiece. The method is practical for forming and sizing tubular parts and other smaller parts where the cost of a fully-enclosing die is not too expensive. Applications for explosive forming include aircraft and jet-engine components, ducts, panels, and housings[5].

J2. ***combustible gas forming*** - With this HERF process, hydrogen, methane, or natural gas, mixed with air, oxygen, or ozone, when ignited, provide the pressure wave that forms the sheet metal workpiece.

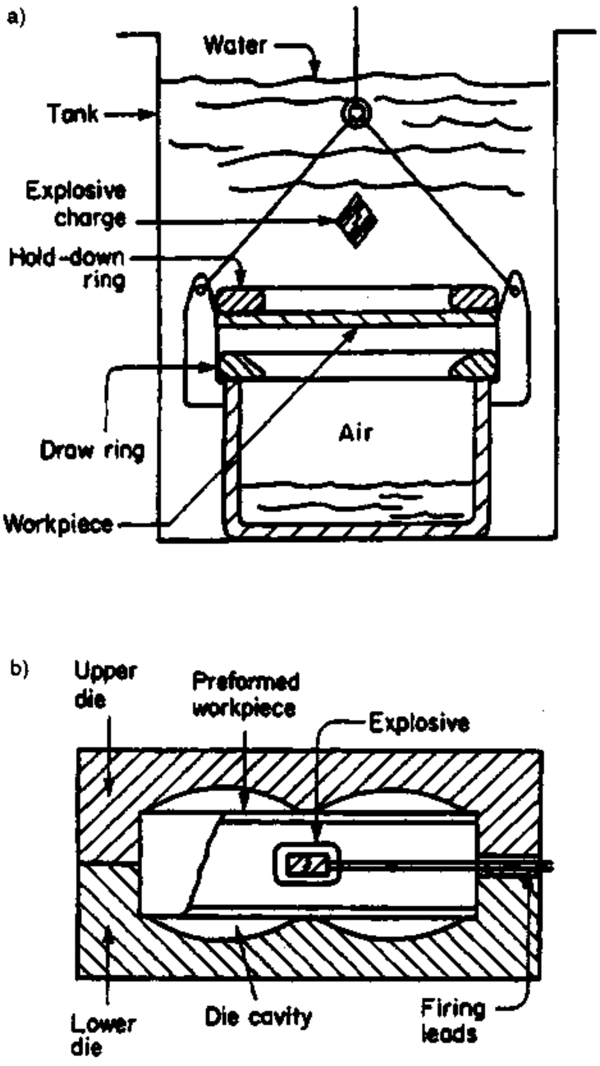

Fig. 2J1 Typical explosive forming arrangements: a) free forming with a water medium and b) with a confined system. (*from Bralla, Design for Manufacturability Handbook, McGraw-Hill, New York, 1999*)

The speed of the pressure wave is considerably less than when high explosives are used, and its duration is shorter but still measured in milliseconds. The pressure wave occurs in the ignited gas rather than in water or some other medium. The process is more suited for in-plant operation and for larger production quantities than high-explosive forming. More complex shapes can be produced. Large parts of sheet metal are feasible. Fig. 2J2 illustrates the process.

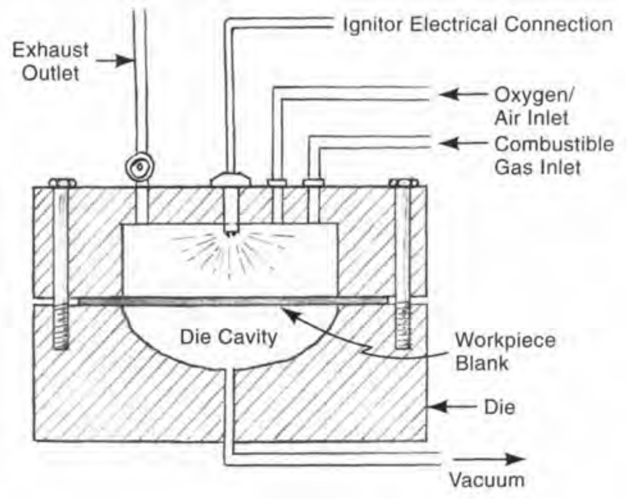

Fig. 2J2 Typical arrangement for combustible gas forming.

J3. ***electromagnetic forming (EMF)*** (also known as ***magnetic-pulse forming)*** - uses the electromotive force generated by a sudden electromagnetic pulse to form conductive sheet metal workpieces. A magnetic coil, placed adjacent to the workpiece, is subjected to sudden electrical current flow from the discharge of a bank of capacitors. The magnetic field thus produced in the coil induces a secondary current in the workpiece and there is a repulsive force between that current and the primary current in the coil. This repulsive force drives the workpiece metal against the die or other part and stresses it far beyond its yield point. There is no contact between the coil and the workpiece, and the magnetic energy will pass through non-conductive materials such as fibre, rubber, plastics, etc. The operation works best with highly conductive workpiece materials such as copper, brass and aluminum. Low-carbon steel can also be processed. Materials of low electrical conductivity can be formed if a "driver", a sheet of conductive material, is placed between the coil and the workpiece. Equipment consists of a storage capacitor, a power supply to charge the capacitor, and switches. The magnetic pulse lasts only 10 to 100 µs. One common application is to contract (swage) tubing around fittings or tubular fittings around pipe, cable, or hose. This requires a coil around the part to be swaged. In all electromotive forming, the coil must be physically strong enough to withstand the repulsive force, but otherwise, tooling is simple and inexpensive. The operation is illustrated in Fig. 2J3. It can be used for embossing, forming, expanding tubing, piercing, and blanking, as well as swaging, but there are limitations to the complexity of shapes that can be produced.

J4. ***spark-discharge forming (electrospark forming)*** - Both this method and electrohydraulic forming, described below, use electrical energy stored in a bank of capacitors to create a shockwave, which is transferred through a liquid medium. In spark-discharge forming, the energy released is in the form of a spark across two electrodes. Switching circuits instantaneously discharge that energy to the two electrodes. The intense energy emanating from the spark sends a shock wave that forces the workpiece material against the die walls. The equipment set up is similar to that depicted in Fig.2J1 a) and b) except that the explosive charge is replaced with spark discharge. The liquid medium used must be non-conductive because the electrodes generating the spark are in the same liquid. The use of a spark discharge permits careful control of the energy intensity. Repetitive cycles can be employed without removal of the workpiece when successive blows can aid the forming operation. Tooling and equipment costs are low so the process can be economical even with small production quantities.

J5. ***electrohydraulic forming*** - is very similar to spark-discharge forming except that the energy is released from an exploding bridgewire connecting

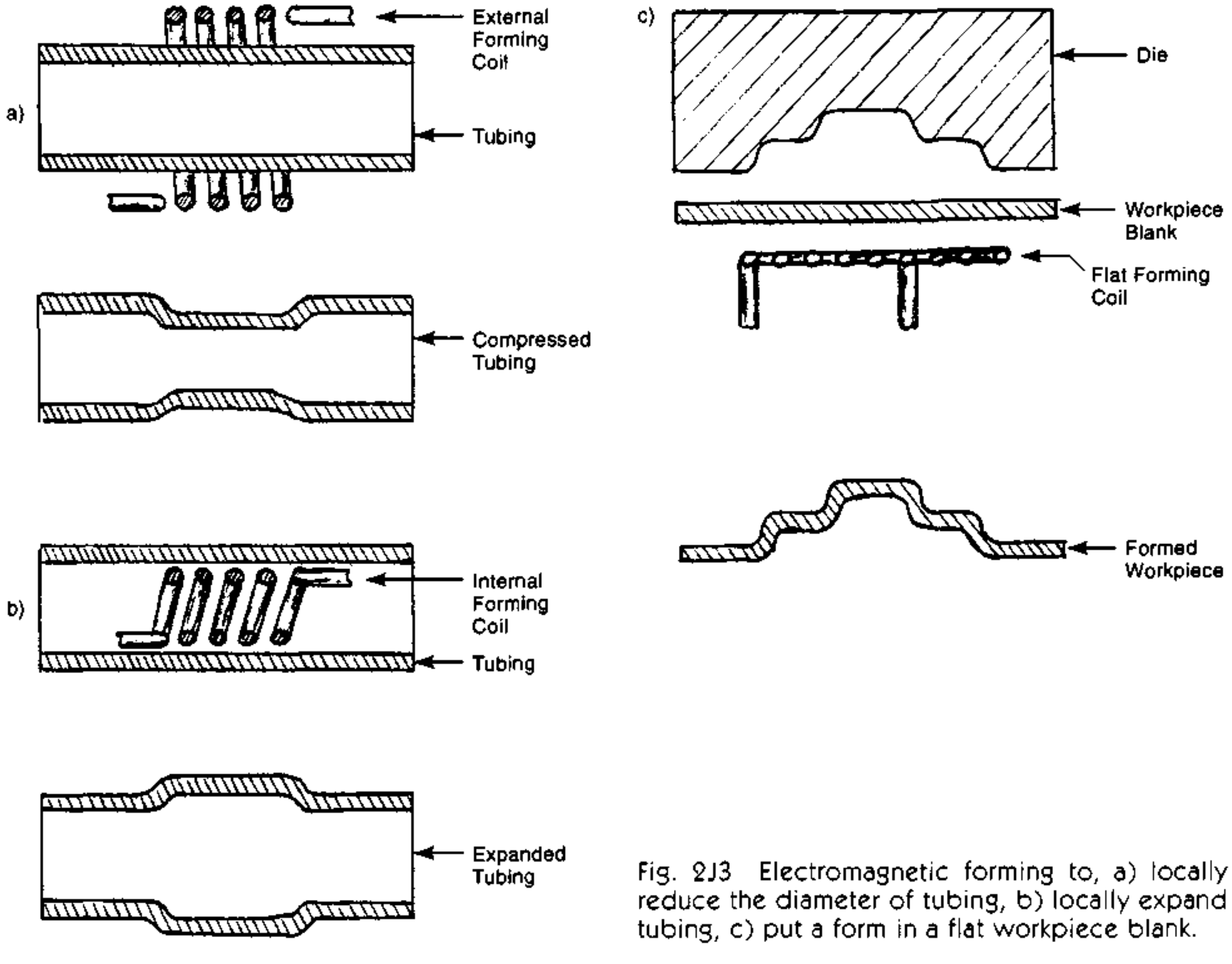

Fig. 2J3 Electromagnetic forming to, a) locally reduce the diameter of tubing, b) locally expand tubing, c) put a form in a flat workpiece blank.

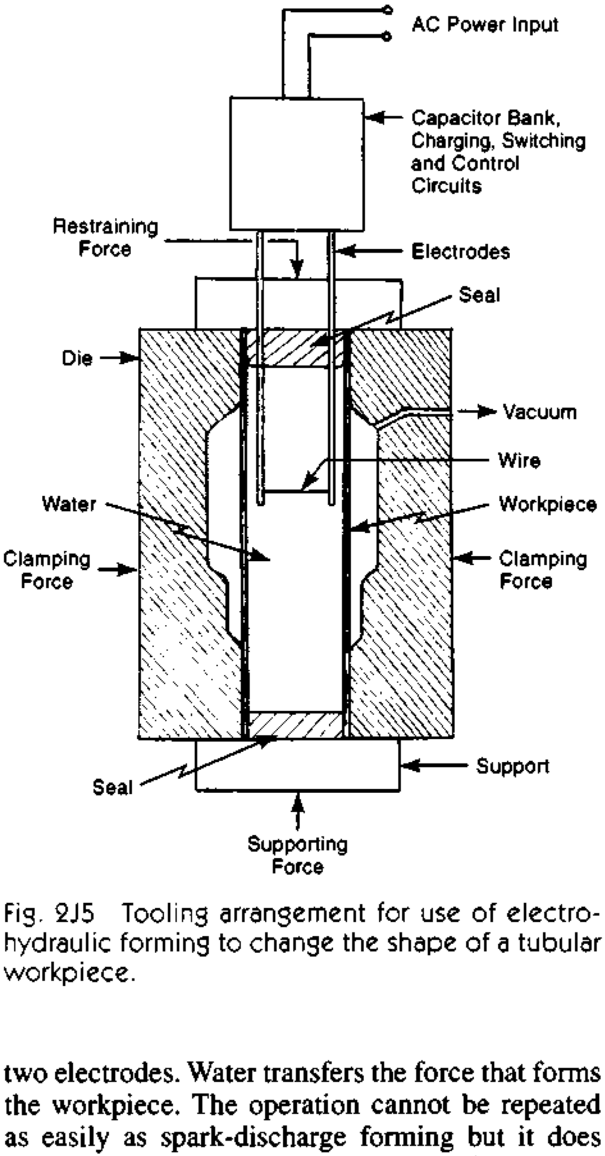

Fig. 2J5 Tooling arrangement for use of electrohydraulic forming to change the shape of a tubular workpiece.

two electrodes. Water transfers the force that forms the workpiece. The operation cannot be repeated as easily as spark-discharge forming but it does provide somewhat greater forming force. The process, illustrated in Fig. 2J5, is most suited to expansion forming of tubular parts. The process is effective; however, if the operation can be performed by more conventional methods, they are usually more economical.

J6. ***pneumatic-mechanical forming*** - can be considered a variation of drop hammer forging. Compressed gas stored in a pressure tank, or the energy released in the form of gas from combustion of a fuel-oxidizer mixture, is used to drive the press ram to a high velocity, two to ten times that of conventional drop hammers[4]. The best application of the process is the forging of parts having thin vertical dimensions and a high level of detail. The process is advantageous with workpiece materials of high unit cost when the forging can be produced in sufficient detail so that material wastage is minimized. Otherwise, conventional forging will probably be more economical.

J7. ***peen forming*** - is a forming process that does not require any dies and can be performed at room temperature. Sheet metal is impinged on one surface with a stream of metal shot as illustrated in Fig. 2J7. Each shot piece acts as a very small hammer stroke, compressing the surface vertically but elongating it horizontally. The shot is delivered by either nozzle or centrifugal wheels. The total effect is the generation of a gentle compound convex curve. The process is useful when the form required does not involve abrupt curvature changes. It is used in the aircraft industry to produce wing panels. An advantage is that both the top and bottom surfaces have residual compressive stresses, which aid in providing fatigue strength. Workpieces with some reinforcing structure can be processed. Sometimes a preload is applied to the surface to assist in producing the desired final shape. Aluminum sheet from 0.050 to 0.200 in (1.25 to 0.5 mm) and steel from 0.016 to 1.00 in (0.40 to 25 mm) thickness can be processed.

K. Straightening

Straightening is required when the workpiece material is not in the form required for subsequent operations (eg., coiled rather than straight) or has undergone some deformation from stresses induced by prior operations. Several methods are available.

K1. ***manual straightening*** - covers a variety of operations performed with surface plates, levers, vises, anvils, hammers, twisting tools, grooved blocks, and heating torches. Typically, the workpiece is clamped at one end or where there is no deformation, and the deformed portion is moved in the opposite direction of the distortion. The workpiece is overbent so that it springs back to a straight orientation. Hammer blows or heat sometimes aid in the process.

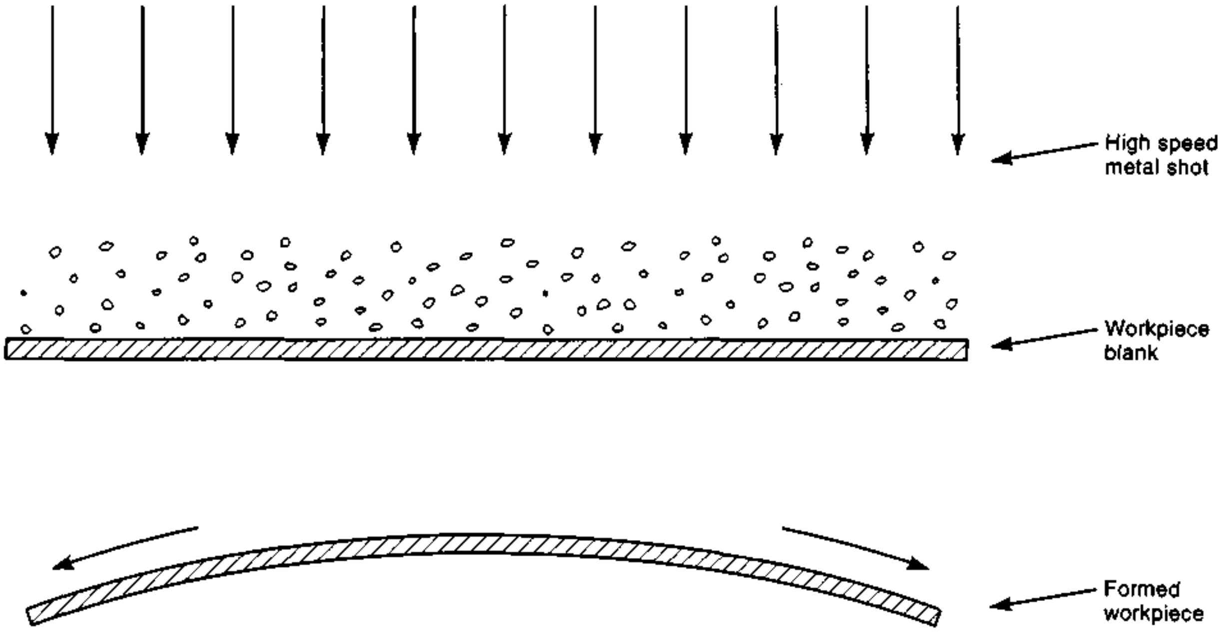

Fig. 2J7 Peen forming. High velocity shot striking the upper surface elongates the metal grains of a sheet and creates a convex shape.

K2. ***press straightening*** - uses an arbor or hydraulic press to make the corrective bends. Typically, the deformed workpiece is placed on support blocks in the press bed so that the convex area is on the upward side. The ram descends and bends the workpiece in the opposite direction far enough so that the elastic limit of the material is exceeded. If done properly, the workpiece will spring back to a straight position. Indicators and blocks may be used to find the high points in the deformed areas and to measure the effect of press strokes. Heat may also be applied to the area of deformation. The process works best with materials of Rockwell C hardness less than 40[3].

K3. ***parallel roll straightening*** - illustrated in Fig. 2K3, is used on sheet, rod or wire. A series of parallel rollers on opposite sides of the workpiece subjects the workpiece to progressively decreasing reverse bends as it passes through the rollers. As the metal is bent back and forth, it is stressed slightly beyond the yield point, exiting from the rollers with a reasonably flat or straight shape. The operation is rapid since it is continuous.

K4. ***rotary straightening*** - is a method for straightening round rods and bars. It uses two or more rollers with axes at an angle to each other and at an angle to the axis of the part. One of the

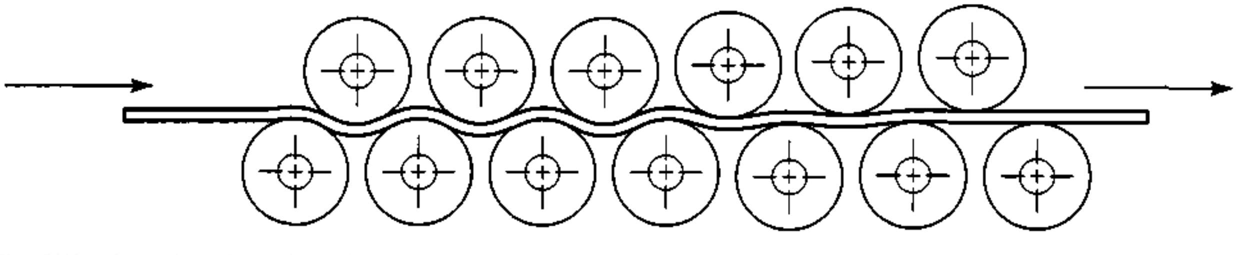

Fig. 2K3 Straightening of workpiece material by passing it through a set of straightening rolls that reverse-bend it a gradually decreasing amount as the material passes through.

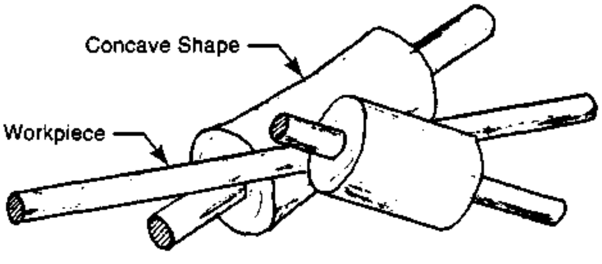

Fig. 2K4 Rotary straightening of bar material. The workpiece moves axially. Alternating compressive and tensile stresses straighten the workpiece. (Guides for the workpiece are not shown.)

rollers has a concave shape, as shown in Fig. 2K4, while the other is cylindrical. There are guides to position the direction of the rod to be straightened. Both rollers are driven and they rotate the workpiece and cause it to move axially. As the workpiece moves, the curvature of the concave roller(s) puts the workpiece surface into alternate stresses of compression and tension. The angles of the rollers and the pressures that they apply are both adjustable. The method is particularly applicable to short workpieces that are more difficult to straighten by other methods. Workpieces of from 1/16 to 10 in (1.6 to 250 mm) long have been straightened with this method^3.

K5. ***epicyclic straightening*** - is a proprietary process for straightening axles, tubular driveshafts, and propeller shafts, I-beam and other sections, and symmetrical forgings. The workpiece is supported on its ends and is rotated. A powered arm, attached to the center of the workpiece, deflects the center of the workpiece so that it is stressed in all directions beyond its elastic limit. The powered arm reduces the magnitude of deflection gradually so that the neutral axis of the part describes either a circular or elliptical spiral toward the center.

K6. ***stretch straightening*** - The workpiece is gripped mechanically and stretched in a straight line beyond the yield point. Twist deformation can also be corrected; when this is needed, the workpiece is reverse-twisted when it is stretched. The process is normally limited to workpieces of constant cross section. It also results in some material loss since the ends damaged by gripping must be removed.

L. Other Forming Processes

L1. ***powder metallurgy (P/M) processes*** - metal powders mixed with certain solid lubricants are compacted under pressure to form the desired shape (See L1c.); they then are heated to a temperature sufficient to bond the particles strongly together (See L1d.). The sintered part may be pressed a second time to improve dimensional accuracy and surface finish and, sometimes, to modify the shape. (See L1e.) Typical powder metal parts are rather small (About 3 square inches in cross-sectional area is a typical maximum because of the high press forces involved.). The process is used for a variety of precision mechanical parts, but bearings, and other parts with surfaces that have are metal-to-metal sliding contact are good applications because the porosity inherent in these parts provides space for a reservoir of lubricating oil. Almost all metals can be processed by this method. Iron, steel, bronze, copper, brass, nickel alloys, and stainless steels, are the most commonly used. Small gears, cams, small levers, sliding blocks, sprockets and pawls are other applications. Further applications are parts made from alloys that are otherwise difficult to machine or fabricate such as carbide cutting tool inserts, and tungsten lamp filaments. Parts requiring dual materials such as graphite-carbon motor brushes, copper or silver and tungsten electrical contacts, and tin-copper bearings are other examples. The process tends to be limited to high-production situations since the tooling required is not inexpensive. However, the labor content is low, particularly in comparison with applications that otherwise would require machining. The process works best with parts having straight sides, although tapers and curvature of sidewalls are possible over short distances if properly designed. Undercuts and holes in sidewalls are not feasible and must be produced by secondary machining operations.

L1a. ***metal powder manufacture*** - See *powders, metal.*

L1b. ***powder blending and mixing*** - The ideal powder for parts making may contain a mixture of powders of different metals or alloys, nonmetals, different particle sizes, lubricants, and binders.

Lubricants, eg., stearic acid, lithium stearate, and graphite, provide better compressibility and flow characteristics. Binders improve the "green strength" of the unsintered part. Both binders and lubricants are burned off or volatilized in the sintering process. Blending of these ingredients may take place either wet or dry. Water, or other solvents facilitate the mixing and reduce dust. Mixing usually is performed as a batch operation. The mixing cycle should be short to prevent damage to or work-hardening of the powder particles. Drum, double-cone, cubical-shaped, V-shaped, and conical mixers, with rotating screws are commonly used. Fig. 2L1b shows the shape of several common mixers.

L1c. ***pressing (compacting)*** - Metal powders, normally at room temperature, are introduced to, and fill, a die cavity of precise shape, with sidewalls that are usually straight. A punch of the same cross-sectional shape as the die, and with a close fit to the die cavity, descends into the die and presses the metal particles together. A lower punch, which rises to aid in the compaction and later ejection of the part, is common. Parts with stepped shapes or flanges may have more than one lower and upper punch. (Multiple punches are required because the powder does not behave like a liquid; friction between particles and die sidewalls reduces the density of areas away from the punch face. Almost all compaction is vertical, and pressures of up to about 1600 MPa (230,000 psi) are used. The pressing operation forms a "green" part of sufficient strength for further handling (but not enough strength for functional use.) The die and press motions are summarized in the caption accompanying Fig. 2L1c. Note that there is an upward force and motion applied from the bottom punch. This is advisable to provide more uniform compaction, overcoming die wall friction. Multiple-action presses with multiple-motion punches may be used to provide the necessary compaction in all portions of more complex workpieces. In one pressing method variation, the basic die is not fixed; instead, its motion during the operation provides the equivalent effect of a moving bottom punch. This variation, called ***withdrawal-die pressing*** , is shown in view (b) of Fig. 2L1c.

L1d. ***sintering*** - The "green" compact is heated to an elevated temperature in a controlled atmosphere. Either a batch-type or continuous conveyor furnace may be used. The furnace temperature is well below the melting point of the alloy involved but high enough and maintained for a long enough period so that diffusion bonding of the metal particles takes place. The metal particles bond securely together and there may be some increase in density but the resulting part is not 100 percent dense. Densities of 75 to 90 percent are typical.

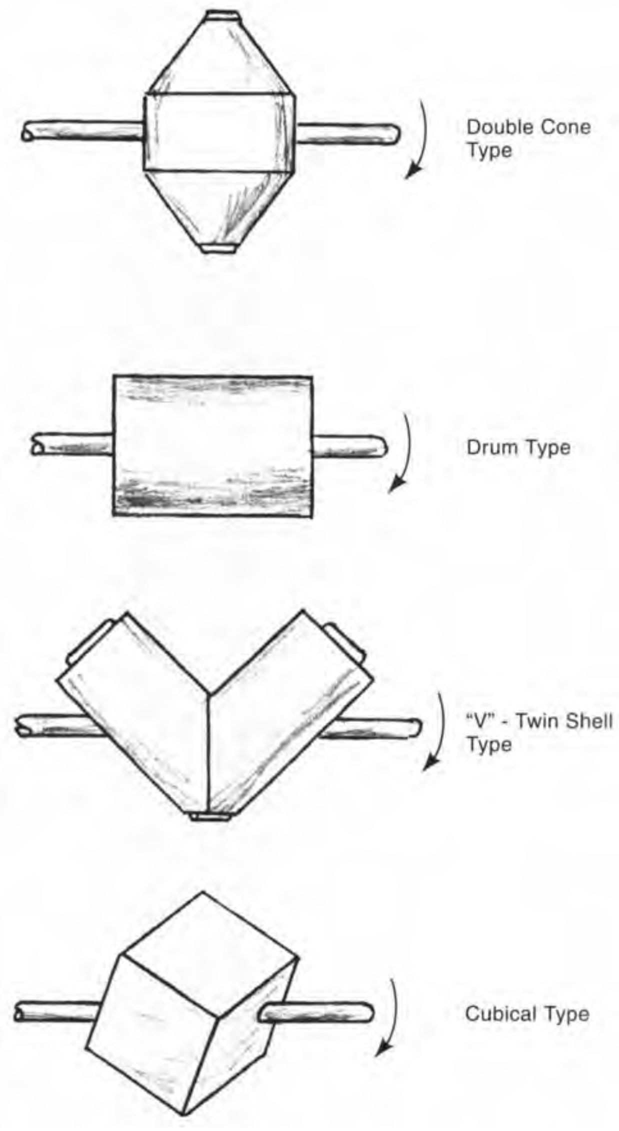

Fig. 2L1b Four types of rotating mixers used to blend metal powders.

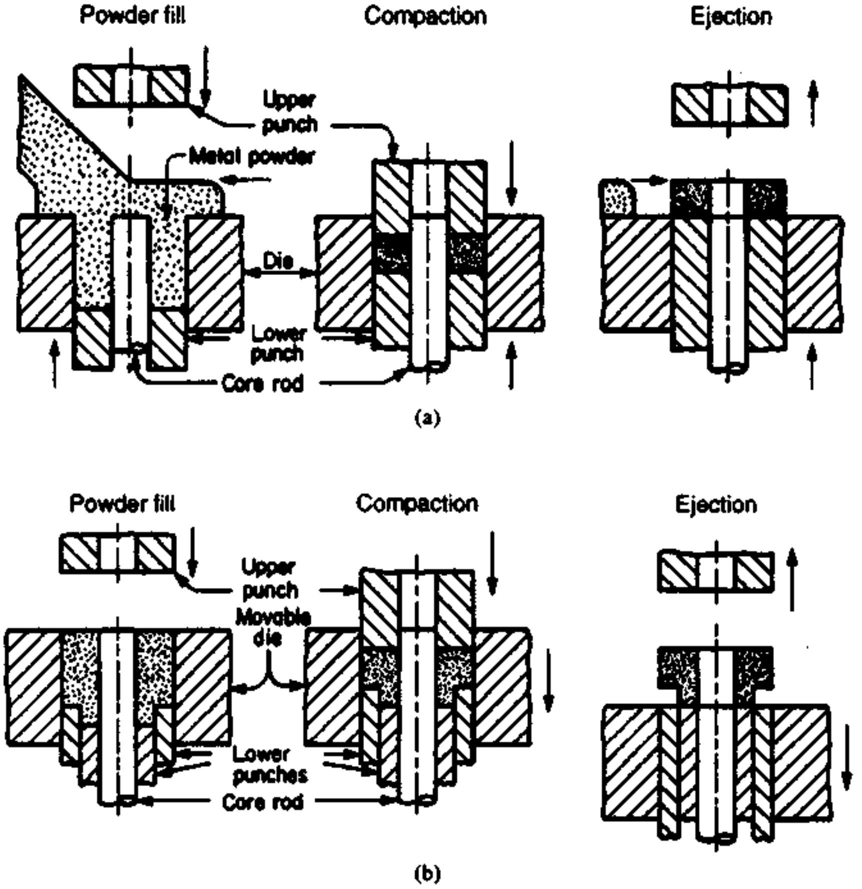

Fig. 2L1c The pressing sequence for powder metal parts, (also applicable to ceramic parts. See chapter 5.) (a) **Fixed-die system.** The die is fixed in the press table. The lower punch is withdrawn when the feed shoe (not shown) is over the die cavity. The excess metal powder is pushed aside. The upper punch lowers the die. The upper and lower punches move simultaneously. Powder is compacted. The upper punch is then withdrawn. The lower punch continues to rise, ejecting the newly compacted part from the die. The feed shoe moves across the face of the die, pushing the part to a collecting station. The cycle is repeated. (b) **Withdrawal die pressing system.** The main lower punch is fixed; the die is movable. The die is filled. The upper punch enters the die. The die is withdrawn at half the speed of travel of the upper punch. When two lower punches are employed, one lower punch is fixed and one is movable. When the movable punch has completed its compaction motion, it is allowed to move to enable compaction of the second level to occur. When compaction has been completed, the upper punch is raised. The die is further withdrawn to effect ejection by stripping the die from the component. The feed shoe moves across the face of the die, pushing the part to the collection station. The die rises to allow it to fill from the feed shoe. The cycle is repeated. (*from Bralla, Design for Manufacturability Handbook, McGraw-Hill, New York, 1999*)

The sintering process actually has three phases:

1. burn off, which removes air and volatilizes binders and lubricants as the temperature of the compacted part gradually increases. The volatilized materials must be removed from the furnace atmosphere before the second phase begins.
2. a high-temperature stage during which the diffusion bonding takes place. This can require a period of minutes or several hours. For iron-based parts, the temperature ranges from

1850 to 2100°F (1010 to 1150°C); copper, bronze, and brass parts allow somewhat lower temperatures[4].

3. cooling phase, which lowers the temperature of the sintered workpieces while maintaining the controlled atmosphere.

The atmosphere used is commonly one with oxide-reducing properties. Dissociated ammonia, hydrogen, or cracked hydrocarbons, are most often used, though the atmosphere may also be inert, especially with nitrogen. Vacuum sintering is utilized with stainless steel, refractory alloys, and titanium. Fig. 2L1d shows a typical continuous type furnace.

L1e. ***repressing*** - The sintering process results in parts with some shrinkage from the green state as binders and lubricants are removed from the parts. There is also some inevitable distortion from the thermal expansion and contraction that takes place during sintering. To improve the dimensional accuracy of the parts, to improve surface finish, to sharpen certain details, and sometimes, to reduce the porosity of the parts, they may be subjected to an additional pressing (or "calibrating") operation. With some parts, repressing can take place in the same die that was used for compacting; for other parts, separate dies are used. The parts are pressed severely enough to cause plastic flow of the material. In addition to the improved dimensions and surface finish, the parts gain some strength from being cold worked and densified.

L1f. ***secondary operations*** - Powder metallurgy parts can be machined, thread rolled, heat treated, and surface finished after fabrication. Machining takes place when undercuts, side holes, screw threads, and other features not feasible with the powder-metallurgy process, are needed. Techniques are straightforward but the effect of porosity must be considered. It is usually not recommended to machine bearing surfaces if impregnated lubricants are planned to be used, since the machining will tend to close the surface pores of the workpiece. Heat treating with liquid-cyanide is not recommended for PM parts because the liquid salts can be trapped in the pore structure, leading to corrosion. Similarly, electroplating and other surface treatment chemicals can be trapped in these pores; pretreatment with materials that close the pores permits electroplating and other chemical treatments.

L1g. ***powder metal forging*** - In this process, the sintered powder metallurgy part becomes a blank for forging. The operation involves more drastic deformation than conventional repressing, and the P/M part is heated to forging temperature beforehand. This process has the advantage that the forging blank can be made to optimum size and shape, eliminating or greatly reducing wasted material, and permitting the production of more complex forged shapes with reduced necessity for machining after forging.

Forgings made from P/M blanks can be more precise than conventional forgings. No flash is produced

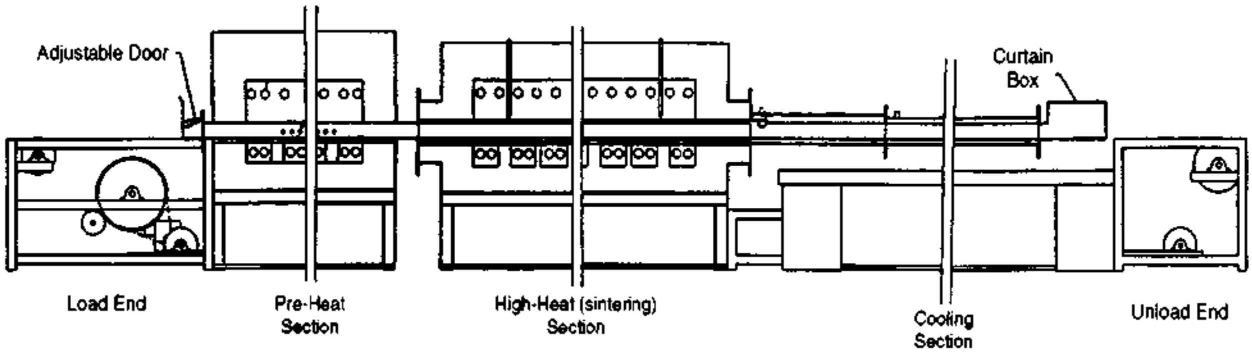

Fig. 2L1d Conveyorized, continuous-type, sintering furnace for powder metal parts. The furnace includes a preheat section, a high-heat sintering section and a cooling section. (Note: The lengths of the sections are considerably longer than shown here. The drawing was shortened to fit the page.) *(Drawing courtesy Abbott Furnace Co.)*

and draft is not necessary. The part is stronger than a conventional repressed P/M part because it gains the benefit of the improved grain structure that forging provides, and the density is increased to as much as 99 percent. Cams, gears, splines and connecting rods are typical parts made with this process. To prevent oxidation, protective atmospheres are used during the heating and forging cycles or the workpiece is coated with graphite.

L2. ***electroforming*** - Electroforming is a process that utilizes electroplating (See 8C.) techniques to make a formed sheet component. Whereas, in electroplating, the deposited material is very thin and is left on the surface of the plated workpiece, in electroforming, the deposited material is much thicker and is separated from the substrate after plating to produce a separate part. There are three steps, then, in the process:

1. Preparation of a mandrel,
2. Electroplating of the mandrel to the thickness needed, and
3. Separation of the electroplated material from the mandrel.

The process is particularly suited to complex shapes where very high accuracy and great detail are needed. One common application is dies used in production of compact audio and video discs. The accuracy and detail produced depend on the precision of the pattern or mandrel onto which the plated material is deposited. The electroformed part takes on the detail and accuracy of the mandrel. Therefore, it is necessary for the mandrel to be made with the accuracy and surface smoothness wanted in the electroformed part. Casting and molding methods can sometimes be used in making the mandrel. This may have to be repeated for production of multiple parts if the mandrel is expendable, that is, if it is made of materials that are melted or dissolved to separate the electroformed part and the mandrel.

Typically, the wall thickness of the electroformed material will range from the minimum needed to maintain the part's integrity to as much as 5/8 in (15 mm). Nickel, copper, and silver are metals most easily used for the electroformed parts, with nickel probably being most common. Iron can also be processed. The mandrel can be made of either non-metals or metal, though the former require a conductive coating so that electrodeposition can take place. Plastics, glass, and even wax, can be used for mandrels in addition to metals such as aluminum or stainless steel. Surface finishes down to 2μin are feasible on the interior surface of the part. (The other surface may be quite irregular, but this condition is seldom critical because compensations can be made on the mating parts, if necessary.) Fig. 2L2 shows the process schematically and Fig. 2L2-1 shows a typical electroformed part.

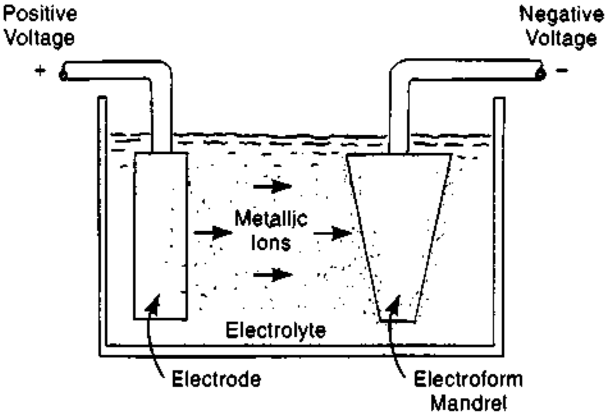

Fig. 2L2 Schematic representation of electroforming. The part is formed from a build up of electroplated coating on a mandrel.

Electroforming can be used to "weld" several pieces together. The weld is stress-free because it is made at room temperature; melting of the fillet or the base materials is not involved. The fillet is developed by electrodeposition of metal on plating the joint area to a sufficient thickness.

L3. ***metal injection molding (MIM)*** - is a process somewhere between standard powder metal forming and injection molding, as used with many plastics (See 4C.). A mixture of fine metal particles and binders that usually include a thermoplastic, wax, plasticizers, and dispersants, is heated enough to provide a paste-like consistency and is injected under high pressure into a mold cavity. The mixture cools to form a molded workpiece that is ejected in the same way as are plastic parts. The molding equipment used is very similar to that used for injection molded plastics. Molds are of hardened tool steel. The molded part is in the "green"

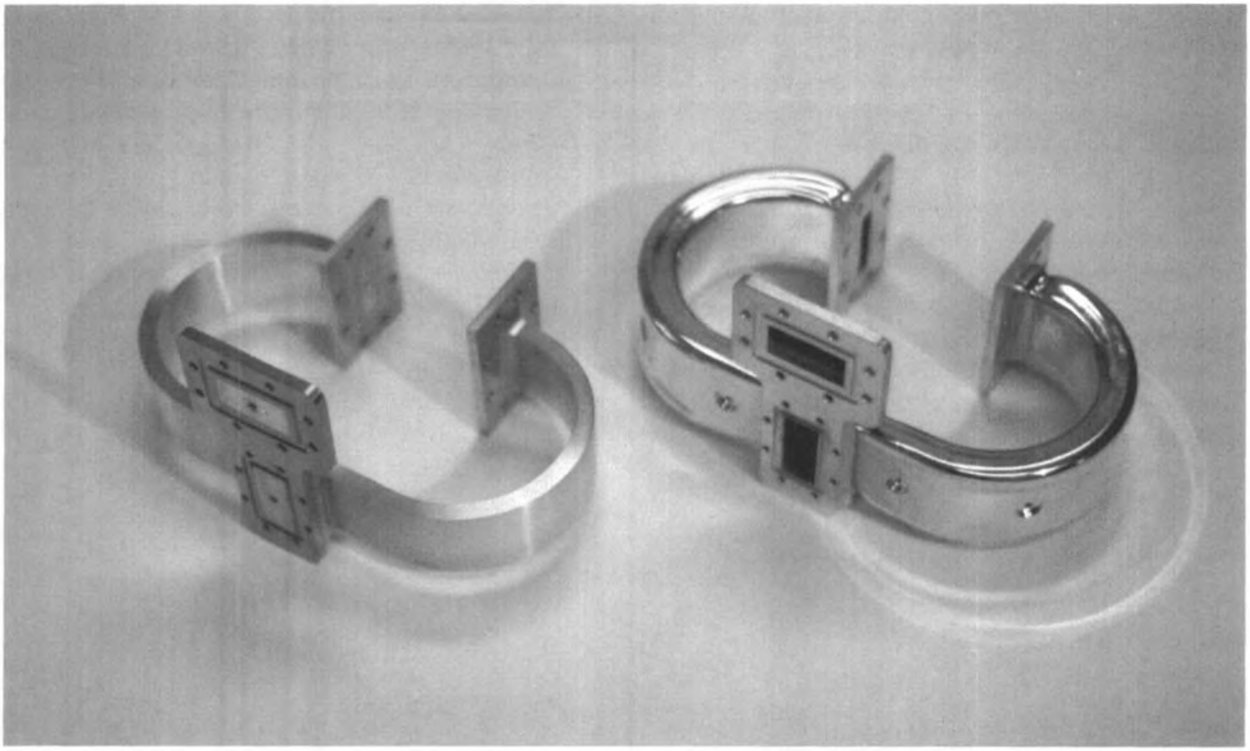

Fig. 2L2-1 A copper electroformed microwave guide (shown on the right) and the aluminum mandrel on which it was formed (shown on the left). The mandrel is dissolved chemically after the plated coating is of the desired thickness. The flanges in the finished part were "welded" to the guide by plating additional metal at the joint after assembly. Electroforming is particularly suitable for complex parts like this, particularly if surface details must be accurately produced. In this example, the interior dimensions are the most critical. (*Courtesy A. J. Tuck Company*)

state immediately after molding, strong enough for handling in the factory but not for product use. It is then subjected to a treatment that removes the binder material, either by solvent extraction, catalytic action, or by high temperature vaporization, or a combination of these methods. This may take from one to 24 hours, depending on the size of the parts and the method used. Metal density is then typically about 60% and the workpiece is in the "brown" state, still strong enough for handling.

The workpiece is then sintered in a vacuum or hydrogen/nitrogen atmosphere with methods that are similar to those used in conventional PM sintering. (See description in L1d above.) The sintering temperature usually ranges from 2200 to 2500°F (1200 to 1400°C) for a period of 3/4 to 4 hours. Sintering bonds the metal particles together to form a strong, usable part. The parts are 95 to 99% dense but have shrunk to a size 15% to 25% smaller than the molded dimensions.

The MIM process is carried out with low alloy steels, stainless steels, soft magnetic materials, copper, and other non-ferrous metals. Complex parts can be made with the process to good dimensional tolerances. A final punch press sizing operation may be employed when required tolerances are particularly close. Because of the fine particle size required in the metal powder (less than 20μm in diameter - finer than that used for conventional PM parts), the raw material tends to be expensive. The time-consuming binder removal process is also expensive and must be closely controlled. The process is most applicable for high production quantities of small parts (under golf ball size). Intricate parts, not feasible with conventional PM forming often can be made with the process. Parts produced by the process include pistol, rifle, and shotgun parts, stepper motor rotors, fuel injector components, and automotive parts.

References

1. *Manufacturing Processes and Systems, (9th edition),* Phillip F. Ostwald, Jairo Munoz, John Wiley and Sons, New York, 1997.
2. *Materials and Processes in Manufacturing, (8th edition),* E. Paul DeGarmo, J.T. Black, Ronald A. Kohser, Prentice Hall, Upper Saddle River, NJ, 1997.
3. *Metals Handbook, Volume 4, Forming, (9th edition),* ASM International, Metals Park, OH.
4. *Tool and Manufacturing Engineers Handbook, Vol. 2 Forming, (4th edition),* Society of Manufacturing Engineers, Dearborn, MI, 1984.
5. *Design for Manufacturability Handbook, (2nd edition),* James G. Bralla (ed.), McGraw-Hill, New York, 1998.
6. *Schuler Metal Forming Handbook,* Springer, Berlin, New York, 1998.
7. *Handbook of Metalforming Processes,* H.E.Theis (ed.), Marcel Dekker, New York, 1999.
8. *Introduction to Manufacturing Processes,* J.A. Schey, McGraw-Hill, New York, 1987.
9. *Processes and Materials of Manufacture, (4th edition),* Roy Lindberg, Alllyn and Bacon, New York, 1990.

Chapter 3 - Machining Processes

A. Lathe and Other Turning Operations

A1. ***lathe operations (general description)*** - produce, with a cutting action, surfaces of rotation (surfaces having a round or partly-round cross section), both external and internal, in a workpiece. The workpiece is rotated in a lathe, screw machine, or chucking machine. It is held between centers or in a chuck or collet, or fastened to a face place. The cutting tool is fed into the work or along the work, or both, to produce a part of the desired shape. There are several basic types of lathes and related machines as described below and many varieties of tools that can be fed against the workpiece. These machines are used extensively in the production of parts that contain surfaces of rotation. The basic operations performed on lathes are the following:

A1a. ***turning*** - is the most prevalent lathe operation. In its most common form, a single-point cutting tool is moved on a precise path with respect to a rotating workpiece. When the tool moves parallel to the axis of rotation, straight turning takes place and the surface machined is cylindrical or part of a cylinder. When the cutting tool moves uniformly closer or farther from the axis of rotation as it moves longitudinally, a tapered surface is generated. (This is often accomplished in engine lathe by moving the tailstock supporting center for the work to an off-center position, out of alignment with the headstock axis of rotation.) Fig. 3A1 shows examples of straight and tapered turning. Engine lathes, turret lathes, screw machines, and chucking machines all perform turning operations, to produce all kinds of shafts, axles, spindles, pins, etc. with straight or tapered turned surfaces. Parts as small as wristwatch shafts and as large as ocean liner propulsion components are turned on lathes. Producing a turned surface of considerably smaller diameter than that of the original workpiece may involve one or more roughing cuts, usually with a large depth of cut. Finishing cuts to produce greater accuracy or smoother surfaces normally have a small depth of cut.

A1b. ***form turning*** - occurs when a single-point cutting tool moves longitudinally in a path other than a straight line, or when a cutting tool ground to a particular curved or otherwise irregular edge is fed radially into the rotating workpiece. The profile of the round workpiece then takes the shape of the cutting tool path or the inverse of the form tool edge. The lengths of surfaces produced by form tools on a lathe, shown in Fig. 3A1b, are limited by the width of the tool.

A1c. ***tracer turning*** - is a process for form turning. The inward and outward motions of the cutter as it moves longitudinally along the length of the part are controlled by the motion of a stylus as it bears against a template or master part. Several passes may be used, after which the part duplicates the shape of the template. A variety of tracing mechanisms are available, powered hydraulically, pneumatically, or electrically. The tracing operation is one of those shown schematically in Fig. 3A1. (The movement may also be controlled electronically

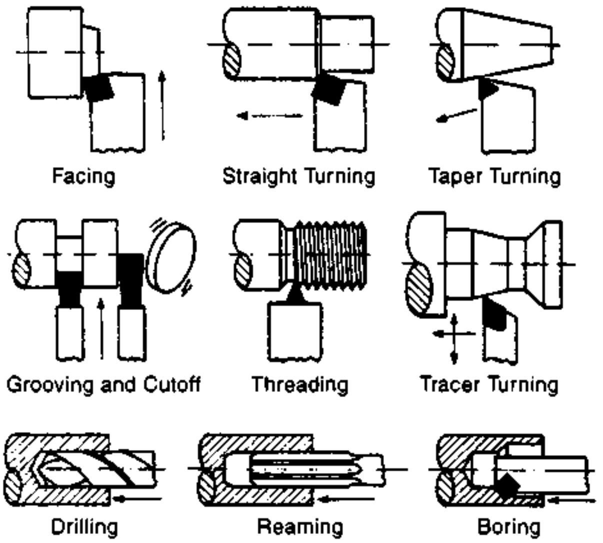

Fig. 3A1 Facing, turning, grooving, thread cutting, drilling, reaming, and boring performed on turning equipment. In facing, the tool moves perpendicularly to the axis of rotation of the spindle and a flat surface is produced. In straight turning, the tool moves parallel to the axis of rotation and a cylindrical surface is generated. In tapered turning, the tool moves at an angle to the axis of rotation and a tapered surface is produced. In tracer turning, the single point cutting tool moves inward and outward as it moves longitudinally, creating a contoured or other shaped surface on the rotating workpiece. The tool's path can be controlled by a template or by computer numerical control (CNC). In grooving, the tool, ground to the width of the groove desired, is plunged, or fed inwardly, creating a groove in the outer surface of the workpiece. Grooving can also take place internally when a cutter inserted in the center hole of a workpiece is fed outwardly. In threading, the cutting tool, shaped to the flank angle of screw threads, moves longitudinally in a fixed relationship with the rotation of the workpiece. *(from Bralla, Design for Manufacturability Handbook, 1998, McGraw-Hill Companies. Reproduced with permission.)*

without tracing, by using numerical or computer-numerical control, CNC). Some tracer lathes have an additional tracer-controlled cross slide at the rear of the work to facilitate the machining of grooves, undercuts, and chamfers.

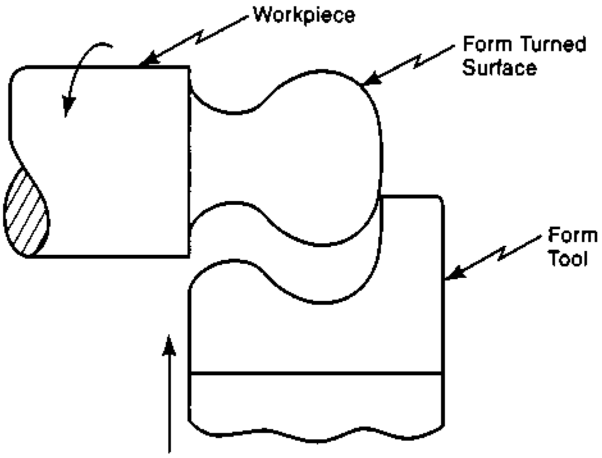

Fig. 3A1b Form turning - The tool is ground to the shape desired and is fed into the workpiece as it rotates, cutting a surface whose shape is the inverse of that of the form tool.

A1d. ***facing*** - produces flat surfaces whose plane is at right angles to the axis of rotation of the part. As the part rotates in the lathe, the cutting tool moves radially toward the axis of rotation, removing material as it advances. (It can also move outward from the center, but the other direction is much more common.) The operation is used to produce flat surfaces on castings and other parts that usually also require turning or some other lathe operation. The process is illustrated in Fig. 3A1.

A1e. ***grooving*** - The cutting tool, usually ground to the width and bottom shape required, is fed into the work, cutting a groove of the desired dimensions. Groves can be cut into any external or internal surface that such a cutting tool can reach. (Internal grooves are usually called recesses.) Fig. 3A1 includes a view of the grooving operation.

A1f. ***knurling*** - is not really a machining (cutting) operation because the knurl is formed, not cut, in the workpiece. Knurling is a common lathe or screw machine operation. The hardened knurling tool rolls against the cylindrical surface of the rotating workpiece with high pressure, causing the surface material of the workpiece to flow into peaks and valleys according to the pattern of the knurling tool. The result is a surface in the finished part that is roughened to a particular pattern, useful to improve the grip if the part must be held or rotated by hand when it is used. Several different patterns are possible. Other uses for the operation are for decoration and to increase the diameter of the part slightly to facilitate a press fit.

A1g. ***cutting off (parting)*** - When parts are made in lathes and screw machines from bar stock, the final operation is to sever the part from the remaining bar material. This is accomplished by advancing the cutoff tool, a narrow grooving tool, radially into the work. When the cutting edge advances to the axis of rotation of the part, the part is severed and falls to the bed of the machine. Some machines, which make blanks for further machining or other operations, are designed to perform only cut off operations and other simple ones on bar and tubular stock. The operation is shown schematically along with grooving in Fig. 3A1.

A2. *lathes and other turning machines*

A2a. ***engine lathes*** - are general purpose machines that provide the most basic means of performing turning, facing, grooving, knurling, and threading operations (Fig 3A1). These machines can also drill, ream, and bore holes at the center of rotation. A typical engine lathe has a chuck or collet to hold the workpiece in a powered rotating spindle, and a bed that normally consists of two ways. A tailstock holds the end of the workpiece opposite the spindle if the workpiece is long enough to require support at the end. A drill, reamer, or other tool can also be mounted in the tailstock so that holes can be machined at the axis of rotation of the workpiece. Other cutting tools (usually single point) are positioned in a compound rest and cross-slide that are mounted on a carriage that can move in an axial direction along the bed of the lathe. The ways of the bed are machined to be smooth and precisely in line with the spindle. Transverse movement of the tool is provided by the cross slide or the compound rest. The compound rest can be placed at an angle for short taper turning or for angle facing cuts. In all cases, the movement of the cutting tool can be precisely controlled with machine screws, mostly with manual crank actuation. Axial movement of the tool carriage, however, can be automatic through rotation of a lead screw. With the lead screw, the movement of the carriage also can be geared to the rotation of the spindle so that screw threads can be machined. Fig. 3A2a illustrates a typical engine

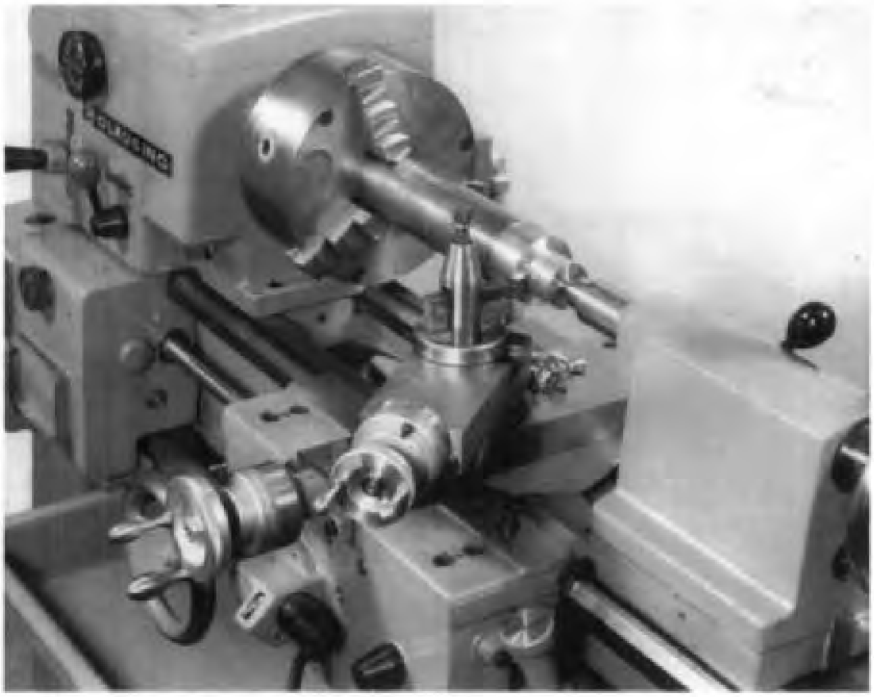

Fig. 3A2a A typical turning operation being performed on an engine lathe. The bar workpiece is held in the three-jaw chuck and is supported by a center in the tailstock. (*Photo courtesy Clausing Industrial, Inc.*)

lathe. These machines are very versatile and are especially applicable for performing turning and related operations when production quantities are limited.

A2b. ***turret lathes*** - differ from engine lathes in that they have a slide carrying a usually hexagonal tool holder, a "turret", in place of the tailstock. The turret can hold cutting tools in each of its sides and can be fed longitudinally and, on some machines, transversely. Turret lathes are, therefore, lathes adapted for production work. They are particularly suited for moderate production levels when automatic screw or chucking machines may not be justifiable, but when the turret lathe's tooling arrangement permits more rapid production than is feasible with engine lathes. Spindles of machines intended for machining of bar stock are equipped with collet chucks. When other components are to be machined, the spindles are fitted with chuck jaws suitable for gripping the workpieces.

A typical ram-type turret lathe is shown in Fig. 3A2b. When the turret lathe is set up for a particular operation, retraction of the turret automatically indexes it and positions the cutting tool required so that it is in place for the next operation. Feeds can be automatic or manually operated to pre-set stops. Turret lathes generally have a four-sided turret on the cross slide of the machine. Some machines also have a fixed tool at the back of the cross slide. Tools on the cross slide turret can also be indexed and fed in the sequence that the particular workpiece requires. Once the turret lathe has been set up with the required tools, the component to be produced can usually be fully machined without tool changes or adjustments.

Semi-automatic and automatic operation of turret lathes can be achieved by incorporating various modifications including automatic headstock control, power feed to the turrets, and automatic turret indexing. The use of some of these features may enable one operator to tend more than one machine. In the fullest degree of incorporation of these devices, the turret lathe becomes an automatic screw machine or chucking machine as described below. Then an operator is needed only to load and unload, and monitor the operation. Current practice, however, instead uses computer numerical control to achieve automatic operation of turning machines.

A2c. ***screw machines*** - are automatic lathes, originally developed for the mass production of screws from bar stock but long since used for a wide variety of parts from bar stock over a broad size range. Once set up, these machines run completely automatically. It is common practice for one operator

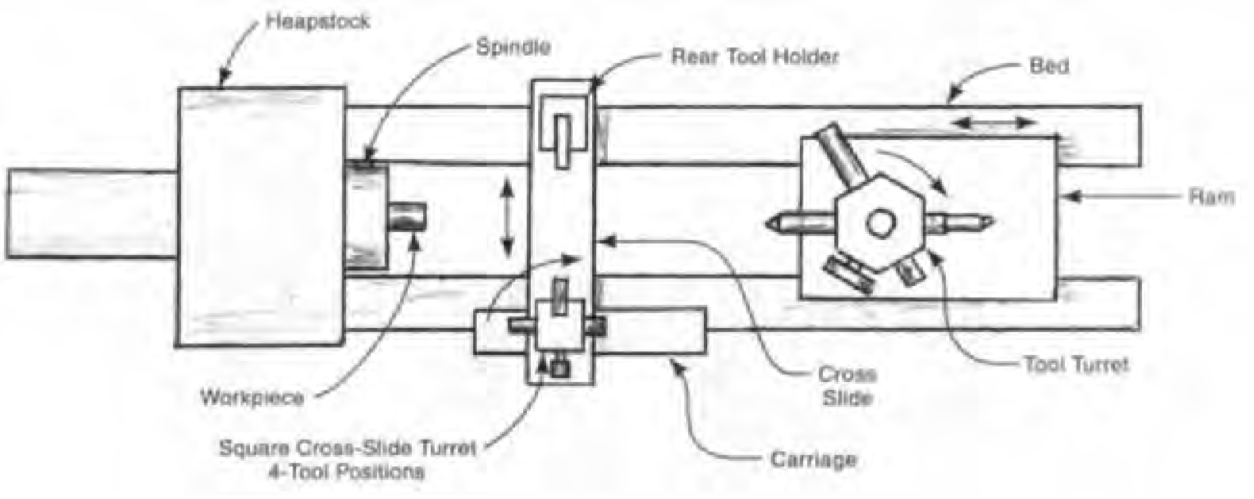

Fig. 3A2b Overhead view of a ram-type turret lathe. The turret on the ram holds up to 6 cutting tools. Four tools can also be held in the turret on the cross slide and an additional one on the rear tool holder.

to run a bank of such machines. Machines are available for producing parts from bar stock as large as 8 in (200 mm) in diameter but most work is performed on machines capable of processing bar of 2 in (50 mm) diameter or less.

A2c1. ***single spindle screw machines*** - There are two common varieties of single-spindle screw machines: the Brown and Sharpe or turret type and the Swiss type. The Brown and Sharpe type is essentially an automatic turret lathe. Typically, it has a six-sided turret, mounted vertically on a ram, a cross slide on which two tool-holders can be placed and one or two upper tool slides mounted near the spindle. Cutting tools on these holders are moved to machine the bar as it rotates. The bar is held in a spring collet in the spindle. All motions of these devices are controlled by cams. With the proper cams and set ups, the machine will operate fully automatically. Bar stock is fed automatically through the hollow spindle after each piece is cut off; the operation, therefore, continually repeats. Additional bars can be fed automatically from a magazine attachment. Some machines are equipped with pick-off attachments that grasp the turned part and hold it for secondary operations that require the workpiece to be non-rotating. Screw driver slots, flats, and cross holes can thus be machined with this attachment. Fig. 3A2c1 illustrates the Brown and Sharpe type of machine. These machines are no longer manufactured, having been replaced by machines whose tool and stock movements are actuated by computer numerically controlled servo motors rather than cams. However, very many of these cam-operated machines are still in use throughout the world.

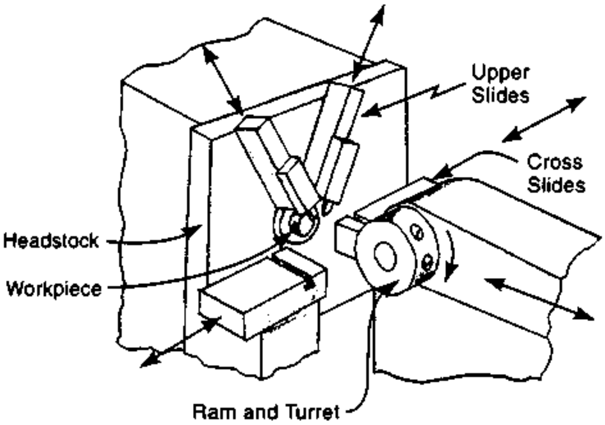

Fig. 3A2c1 A turret-type (Brown and Sharpe type) single spindle screw machine. The two upper slides, the two cross slides and the turret all can hold cutting tools.

A2c2. ***Swiss-type screw machines*** - In the Swiss-type machines, tools are mounted on two cross slides and three upper slides arranged radially around the spindle. The headstock, holding the rotating bar, can slide longitudinally on the machine's ways. Tool movements are controlled by cams. Tools feed radially to the center of rotation of the bar. Rocker arms, driven by cams, provide the approach and infeed motions for the upper tools. Longitudinal feeds are made by shifting the headstock rather than tool slides, again by cam control. Single-point cutting tools are normally used on all slides. Swiss-type machines were originally developed for clock and watch manufacture and are particularly suited for small shafts and other very small parts. Fig. 3A2c2 illustrates the cutting tool and feed arrangements of these machines. Most current designs of Swiss-type screw machines utilize CNC with servo or stepping motors instead of cams to provide tool and headstock motions.

A2c3. ***multiple spindle screw machines*** - have 4, 6, or 8 spindles instead of the single spindle of the Brown and Sharpe and Swiss-type machines. The spindles are held in an indexing drum in the headstock of the machine. Each spindle has a collet that holds a separate piece of bar stock. This arrangement permits the cutting action to be divided so that a portion takes place simultaneously on several different workpieces. The spindles all rotate and then index to a new position after each cutting sequence. There is a tool slide in line with each spindle and, often, a cross slide for each spindle position. All spindle and tool slide motions are automatic, controlled by cams or servo motors. Bar stock is fed at one spindle position. Some machines are equipped to stop the rotation of one spindle and to perform milling and transverse drilling operations on the workpiece. The production rate of multiple-spindle machines is considerably faster than that on single-spindle machines because the operations

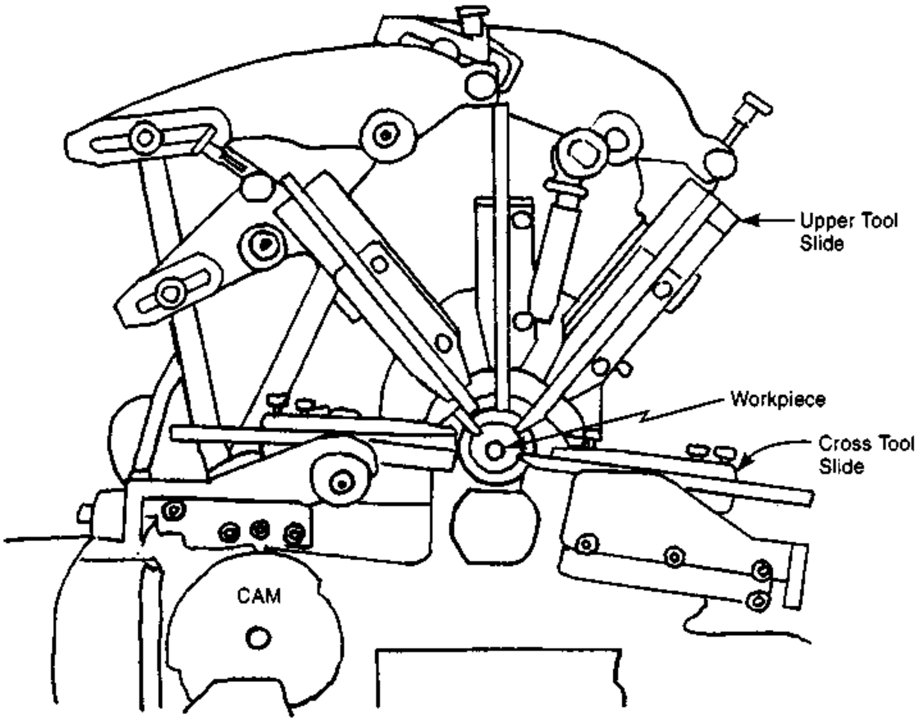

Fig. 3A2c2 Swiss-type screw machine. Cutting tools are arranged radially around the machine spindle. Tool infeed is controlled by cams. Longitudinal feed is provided by moving the spindle head.

are almost all performed simultaneously. Cycle time for a particular part is equivalent to the time required for the longest cutting operation plus the time required to index the spindles. These machines are ideal for high production situations. One operator typically tends a group of such machines. Fig. 3A2c3 illustrates a typical multiple spindle headstock and tool arrangement.

A similar operation can take place with discrete parts instead of bar stock. Each spindle then has chuck jaws made to fit the workpiece. One spindle position is used for loading and unloading workpieces. At each of the other positions, one or more operations are performed on the workpiece. The machines are then designated *multiple-spindle automatic chucking machines*. (See following paragraph.)

A2d. ***chucking machines*** - are automatic lathes designed for operations on castings, forgings, and other parts, rather than on bar-stock. Mechanisms and other features are similar to those of screw machines except for the bar feeding

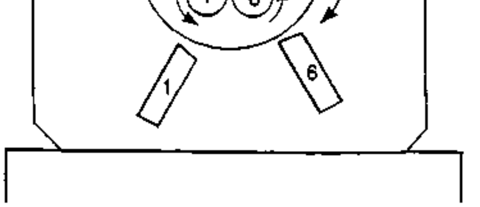

Fig. 3A2c3 The headstock of a typical six-spindle, multiple-spindle screw machine. All six spindles carry bar stock and rotate continuously. Periodically, each spindle is indexed to a new position. Cutting operations at all indexed positions take place simultaneously. There are also as many as six cutting tools located on the tailstock of the machine.

system. Instead, chucking machines have means at the spindle for holding the part to be machined. Special chuck jaws usually must be made to hold the workpiece if its shape is at all irregular. Most chucking machines are single-spindle but multiple-spindle machines also are widely used. Multiple-spindle chucking machines have one or more spindle locations where the spindle rotation stops for loading and unloading workpieces. Chucking machines are made for various sizes of workpieces ranging up to above 50 lb (23 kg) for vertical-spindle machines. Most horizontal-spindle machines are for workpieces under 10 lb (4.5 kg).

A2e. ***turning centers*** - (See T1.)

B. Round-Hole-Making Methods

B1. ***drilling*** - The most common tool for drilling, a twist drill, is a rod with helical flutes and two or more cutting edges at the end. It is rotated about its axis and fed axially into the work. As it advances, it produces or enlarges a round hole in the workpiece. The chips are carried away from the hole by the flutes in the drill. (When drilling an axial hole with a lathe, the workpiece rotates rather than the drill.) There are other types of drills that may not have helical flutes. Others may have only one cutting edge. The drilling process is very common and is used with a wide variety of machines ranging from the most sophisticated computer-controlled or multiple-spindle machines to hand-held electric or crank-driven drills. The most common diameter range for drilled holes is about 1/8 in (3 mm) to 1½ in (38 mm) although diameters from 0.001 (0.025 mm) to 6 in (150 mm) can be drilled with commercially available special drills. Fig. 3A1 includes an illustration of drilling as performed on turning equipment. Fig. 3B1 shows some typical drills.

B2. ***counterboring*** - enlarges a hole for part of its depth and usually machines a flat bottom in the

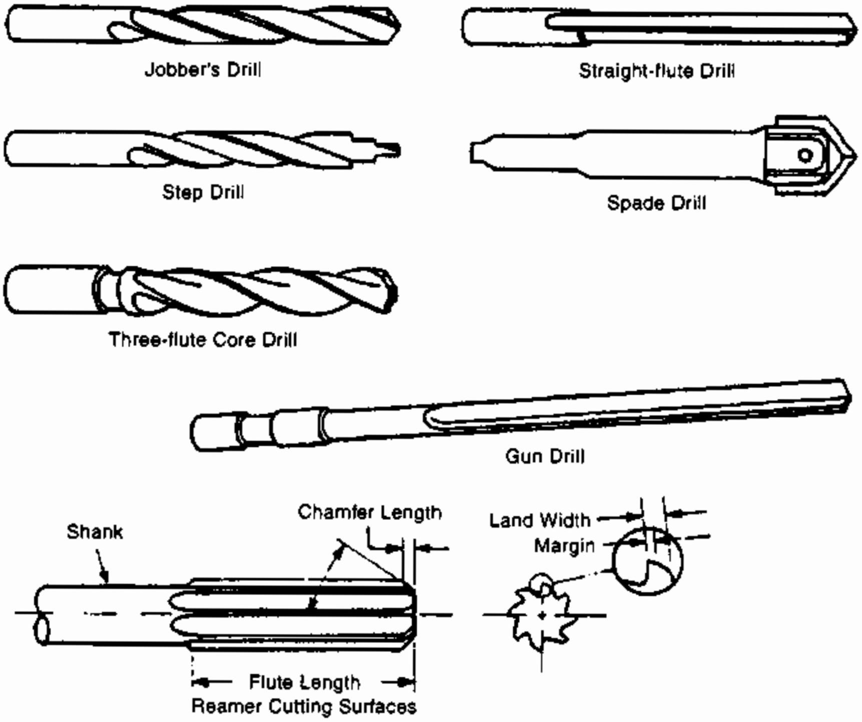

Fig. 3B1 A series of drills and, at the bottom of the group, a typical reamer. *(from Bralla, Design for Manufacturability Handbook, 1998, McGraw-Hill Companies. Reproduced with permission.)*

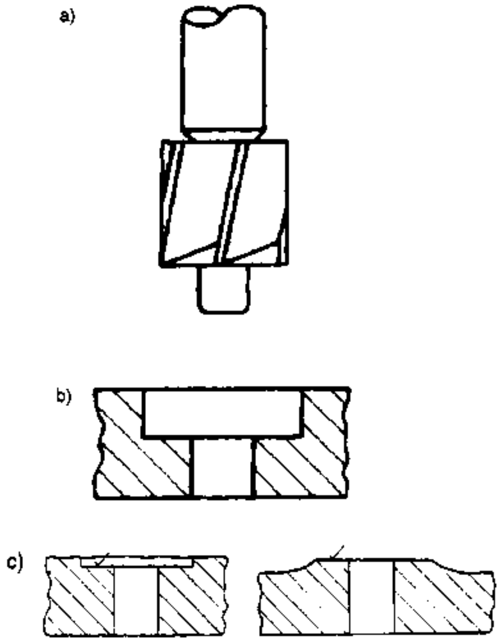

Fig. 3B2 A counterboring/spotfacing tool (view a) and a cross-sectional view of the counterbored hole it produces (view b). View c) shows cross-sections of two slightly different spotfacings produced by the same tool. The purpose of counterboring is to produce a recess of prescribed depth while spotfacing is performed to provide a smooth and perpendicular flat surface for a fastener or other object.

enlarged portion. The operation is most often performed to provide clearance for a bolt head or multi-diameter part. The rotating cutter is guided by a pilot that fits into the existing hole, so that the counterbored surface is concentric with the original hole. A multi-diameter counterboring tool can produce stepped counterbores. Fig. 3B2 illustrates a counterboring tool in view a) and the counterbored hole it produces in view b). (The tool also can be produce spotfacing, as shown in view c).

B3. ***countersinking*** - is an operation that adds a chamfer at the entry end of a hole. A rotating cutting tool, with the edge set to the angle of chamfer desired, is fed into the hole and removes material at the edge. The tool is centered by the hole; therefore the chamfer is concentric with the hole's axis. The operation is typically used to remove burrs or a sharp edge at the end of a hole, or to provide space for a tapered screw head or other tapered object.

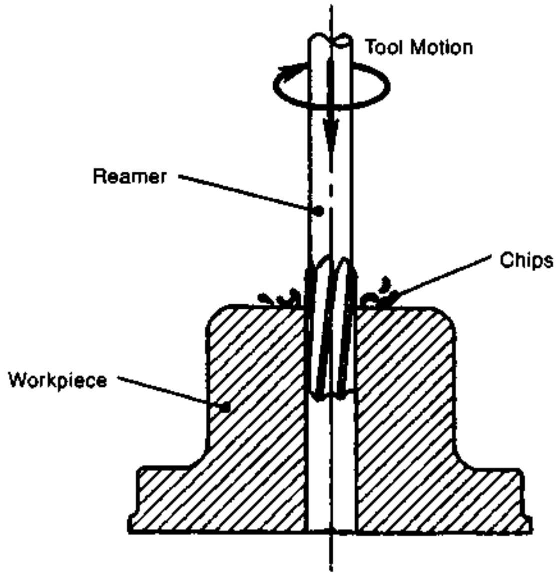

Fig. 3B4 Reaming is used to improve the accuracy, surface finish and straightness of round holes. *(from Todd, Allen, and Alting, Manufacturing Processes Reference Guide, Industrial Press, 1994.)*

B4. ***reaming*** - is a secondary machining operation for existing holes. It can provide a more accurate diameter, improved straightness, and a smoother surface finish as it slightly enlarges the hole. A rotating tool, a reamer, is used. The operation can be performed on a drill press or other drilling machine and is sometimes done by hand. Reamers normally remove 0.005 to 0.015 in (0.13 to 0.38 mm) of diameter. Reamers normally float, that is they follow the direction and location of the existing hole, but they can also be guided by bushings to slightly improve the hole's direction or location. The operation is most common with holes from 1/8 to $1^{1}/_{4}$ in (3 to 32 mm) in diameter but both smaller and larger holes can be reamed. A typical reamer is illustrated in Fig. 3B1 and the reaming operation on a lathe is shown schematically in Fig. 3A1 and Fig. 3B4. Taper reamers are used for finishing tapered holes.

B5. ***boring*** - is an operation that enlarges and improves the accuracy of an existing hole. Either the work or the cutting tool rotates about the center axis of the hole. The single point tool describes a circle, removing material from the surface of the existing hole as it advances, enlarging the hole, normally increasing the precision of any of a number of

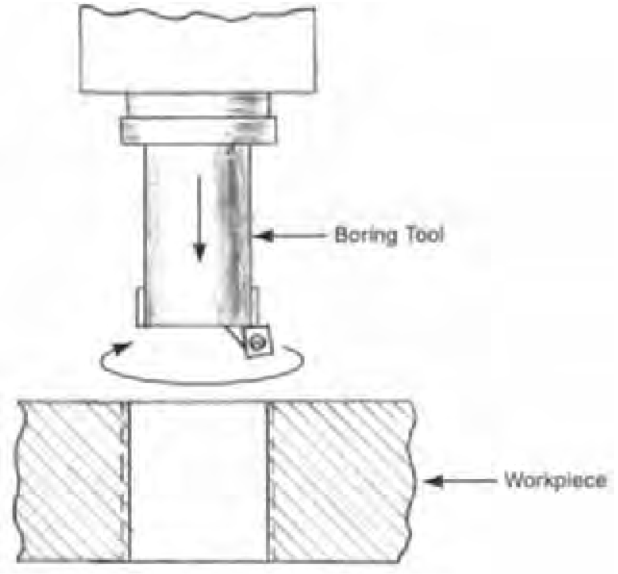

Fig. 3B5 Boring operations slightly enlarge and improve the precision of an existing hole.

factors. They are: its location, diameter, direction, cylindricity, and finish. When this operation is performed on a boring machine, the workpiece is stationary and the cutting tool rotates; when performed on a lathe, the workpiece rotates. On a lathe, the operation can then be considered to be internal turning. The tool spindle and the workpiece holder must be rigid enough to provide the desired accuracy in the bored hole. The operation is performed on holes from about 1/4 in (6 mm) in diameter and larger but is more common on larger holes, especially those too large to be drilled accurately, and for the machining of cast or forged large holes. Fig. 3B5 illustrates the process, and Fig. 3A1 shows it as one of a series of lathe operations.

B5a. ***jig boring*** - is performed on jig boring machines, which are vertical boring machines of very high accuracy. The table movement is extremely accurate and the spindle and spindle bearings are very precisely made. The machines are mainly used for making jigs, gages, dies, and fixtures, especially where accurate layout and hole location are essential.

B5b. ***horizontal boring mills*** - are basically large horizontal milling machines capable of performing boring, milling, and other machining operations on large and often complex parts. These units are sometimes called, horizontal boring and milling machines. The table can move in x and y directions. (Some machines have a table that also swivels.) The headstock that holds the spindle can be raised or lowered. The tool-holding spindle can move inward or outward. These machines are used in the machining of large components that have horizontal holes requiring the precision that boring provides. The machines normally include an end support column, opposite the spindle, for long boring bars. Tolerances with the machines can be as low as one or two ten thousandths of an inch (0.003 to 0.005 mm). Fig. 3B5b illustrates a horizontal boring mill.

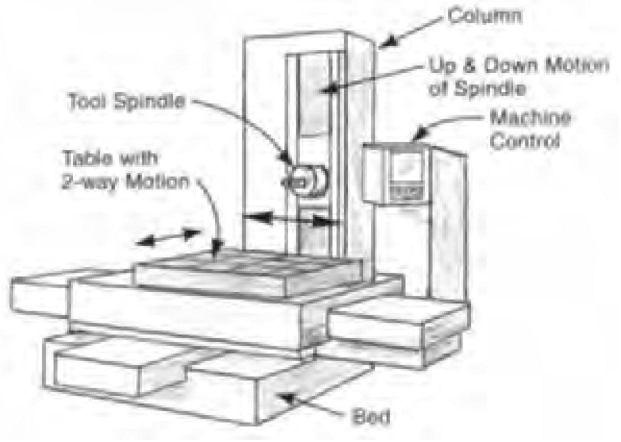

Fig. 3B5b A horizontal boring mill. This machine can perform boring, milling, and drilling operations.

B5c. ***vertical boring mills*** - are machines with a horizontal table rotating on a vertical axis, and a precision tool head (often two tool heads) capable of movements up and down and side to side (in and out radially). There may be more than one cross slide with tool-holding capability. These machines can be considered to be large lathes turned on end. They are especially suited to boring and other operations on parts too large for a conventional lathe. Workpieces are typically round and heavy with large diameters and shorter lengths. The workpiece is clamped to the rotating table, which can be as large as 40 ft. (12 m) in diameter. Both boring and facing are possible. There is no spindle for milling cutters; all cutting is by single point tools. Fig. 3B5c illustrates a typical vertical boring mill.

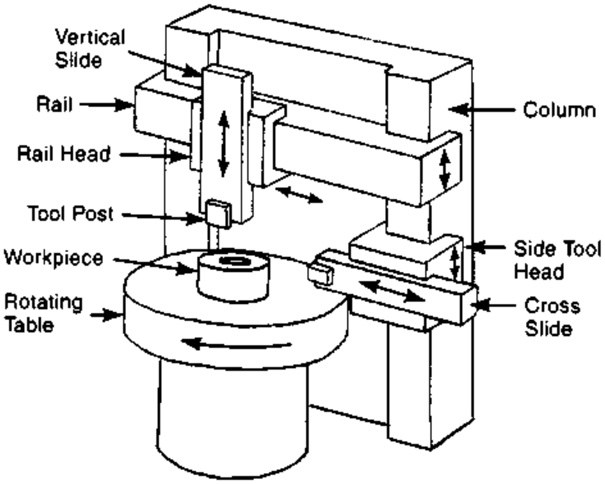

Fig. 3B5c A vertical boring mill. (vertical boring and turning machine.)

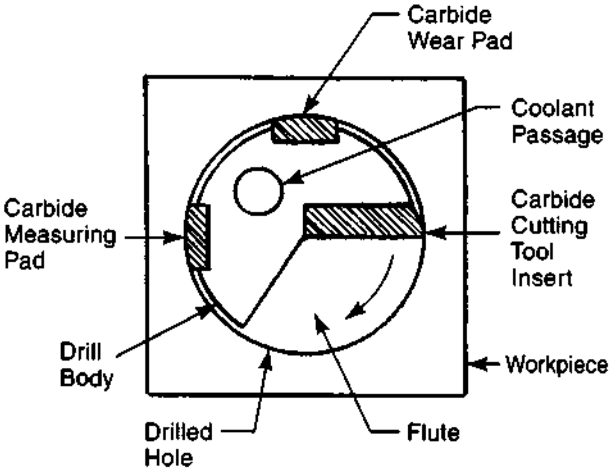

Fig. 3B6 A typical gun drill, viewed from the cutting end.

B6. ***gun drilling*** - is shown in Fig. 3B6. A rotating single-flute drill, normally carbide-tipped, is guided by a bushing at the start of the drilled hole and is self-guided thereafter by a bearing surface opposite the cutting edge. A hole through the whole length of the drill provides a means for oil coolant to flow at high pressure to the cutting edge and to flush chips from the hole. Deep, straight, holes are possible with the process which was originally developed for manufacture of gun barrels. Hole depths of over 250 times diameter are possible. Fig. 3B6-1 shows

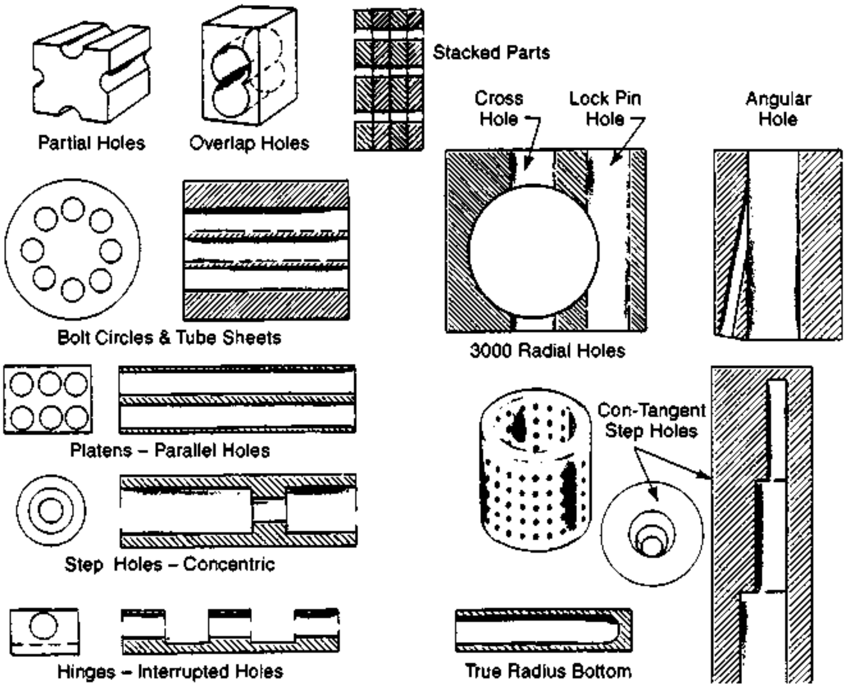

Fig. 3B6-1 The range of hole drilling applications, in addition to gun barrels, for which gun drills are used. (*Courtesy Eldorado PCC Specialty Products*)

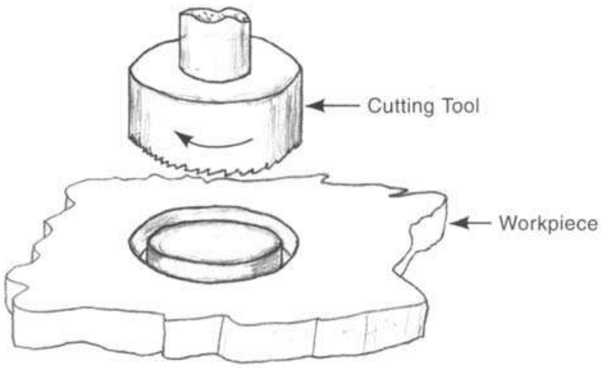

Fig. 3B7 Trepanning. In this example, a hole saw type of milling cutter is being used.

various applications of gun drilling. Also see *guns* and Fig. G9.

B7. ***trepanning*** - makes a circular groove in a workpiece through the use of one or more cutters or cutting teeth rotating about a central axis. If the grooves are cut all the way through the workpiece, a hole is created and a circular center piece (called a *slug*) is produced. The process is used primarily for large, shallow holes. It is also used to machine round disks from flat stock and is illustrated in Fig. 3B7.

Deep-hole trepanning is similar to gun drilling in that forced lubrication is used, the drill is self-piloting, and special drilling machines are employed. It differs in that a center slug is produced.

B8. ***multiple-spindle drilling*** - When production quantities are sufficiently large, it may be justifiable to construct a drilling head with a number of drills, all of which are driven from the same power source and make contact with the workpiece at the same time, drilling a number of holes simultaneously. There are three basic types of multiple-spindle drill heads: adjustable, geared, and gearless. The adjustable variety uses universal joints so that the drill positions can be varied, and are desirable for moderate size lots. For higher production and greater precision of hole location, the geared variety are preferable. The gearless type allows close spacing of the drilled holes. Fig. 3B8 shows a typical multiple-spindle, adjustable drilling head.

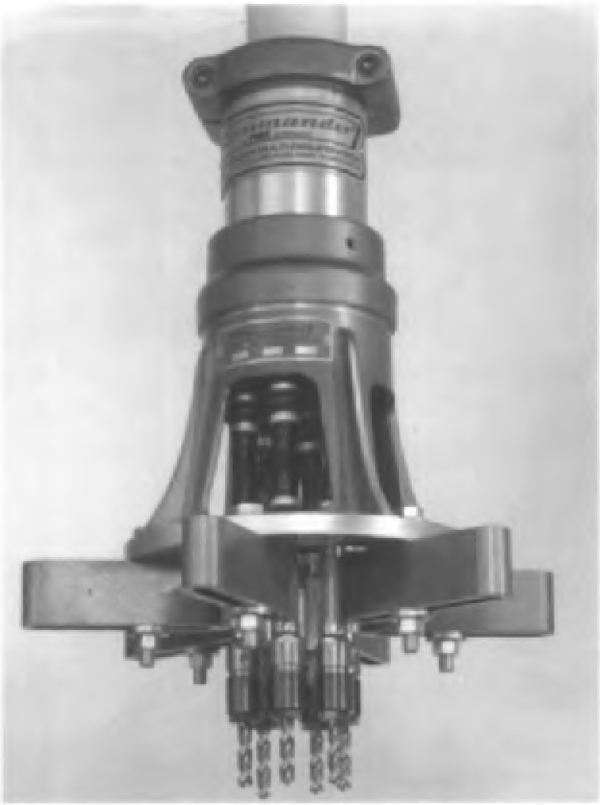

Fig. 3B8 A typical multiple spindle drilling head with provision for adjustment of the position of individual drills. (*Courtesy RMT Technology, Bellwood, IL.*)

C. Grinding and Abrasive Machining

At the point where the cutting takes place, grinding is very similar to other machining operations, the difference being that the workpiece is cut by the sharp edges of small pieces of abrasive material, rather than the edge of a hardened steel or carbide cutting tool. The irregularly-shaped abrasive particles may be bonded to a wheel or coated belt, or may be used loose. The particles commonly consist of aluminum oxide, silicon carbide, cubic boron nitride, diamond, or other hard materials. The individual abrasive grains are each smaller than a conventional metalworking cutting tool, and the grains on a typical wheel make a multitude of minute cuts. Fig. 3C illustrates the grinding process schematically.

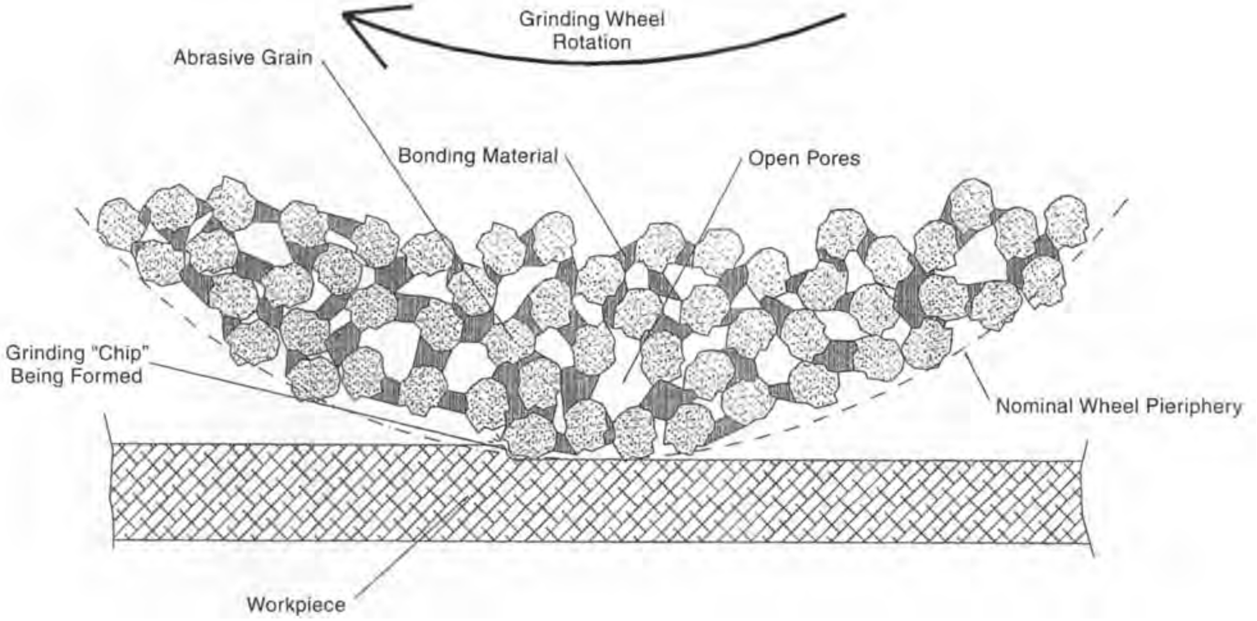

Fig. 3C The grinding process. Sharp edges of individual abrasive grains act as minute cutting tools, removing small amounts of material from the workpiece. (*Courtesy J. R. Casey Bralla*)

(Some grains, depending on their shape, do not cut but instead rub or slightly deform the surface of the workpiece.) Cutting speeds are high but the depth of cut from each grain is shallow. A water or water-oil emulsion is often sprayed on the wheel and workpiece to control the dust that otherwise arises and to overcome the heating effect of the operation. Grinding wheels are often porous, especially those designed for use with softer materials.

As the wheel cuts, it wears, causing some abrasive particles to become smooth but causing others to fracture, exposing new sharp edges. New wheels, and those that have become worn, are dressed with a diamond tool that removes some of the abrasive material and bonding agent, exposing sharp edges of new abrasive grains and providing a straighter, more uniform, cutting surface. Grinding is most commonly a finish-machining operation to provide a smoother surface or greater dimensional accuracy, particularly with hardened materials. When used as the primary metal removal method, the term, *abrasive machining* is often used.

C1. ***cylindrical grinding*** - is used to produce external cylindrical surfaces by removing material, creating smoother surfaces, and providing more precise dimensions. In all such operations, both the grinding wheel and the work rotate. The grinding wheel moves toward the workpiece to contact it and away from the work after the grinding is completed. However, in many cases, the wheel also traverses the work or vice versa. There are two basic methods for grinding the surfaces of components such as shafts, axles, cylinders, and rolls: center-type grinding and centerless grinding.

C1a. ***center-type cylindrical grinding*** - is performed on lathe-like machines. The workpiece is usually held at each end on pointed centers and is rotated about these centers. (It may also be held by a chuck or other holding device.) The grinding wheel normally rotates on an axis parallel to the axis of the workpiece. The wheel and the workpiece contra-rotate so that the contacting surfaces move in opposite directions. After the wheel and the work have made contact, there usually is axial motion between the wheel and the work for the full length of the surface to be ground, plus some overrun. The wheel may also be fed only transversely into the workpiece as it rotates. In this case, the wheel has either

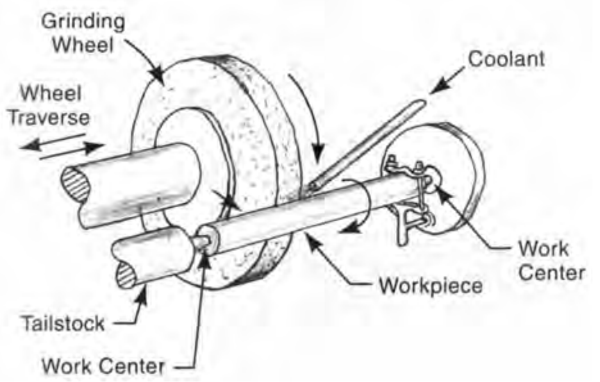

Fig. 3C1a Center-type grinding. Note that the grinding wheel rotates, has transverse motion across the whole length to be ground, and is fed into the workpiece as material is removed. The workpiece, held in centers, rotates against the grinding wheel.

a flat face or have a form dressed into it. The ground surface of the workpiece, then, can have contours, grooves, or whatever shape is dressed into the face of the wheel. If tapered surfaces are desired, the machine is set so that the axes of rotation of the work and the wheel are not parallel. Long, slender parts, and others subject to deflection or vibration during grinding may be supported by a steady rest. Fig. 3C1a illustrates the process.

C1b. ***centerless grinding*** - is a process for machining cylindrical surfaces wherein the workpiece is not held between centers or in a chuck. Instead, the work is supported by a work-rest blade at the correct height and contained between two wheels, as shown in Fig. 3C1b. One wheel is the grinding wheel; the other is a regulating wheel. The regulating wheel does not grind; it rotates the workpiece at a constant rate of speed. The process produces accurate diameters and roundness, with smooth surfaces in parts such as pins, shafts, and rings. Both throughfeed and infeed methods can be used, and production can be quite rapid. The method is normally not applicable if there are flats, keyways, or other interruptions in the workpiece's cylindrical surface. Conventional centerless grinders can accommodate solid parts up to about 7 in (18 cm) in diameter and rings and tubing up to about 10 in (25 cm) in diameter. Larger sizes are too heavy for smooth operation and require special equipment.

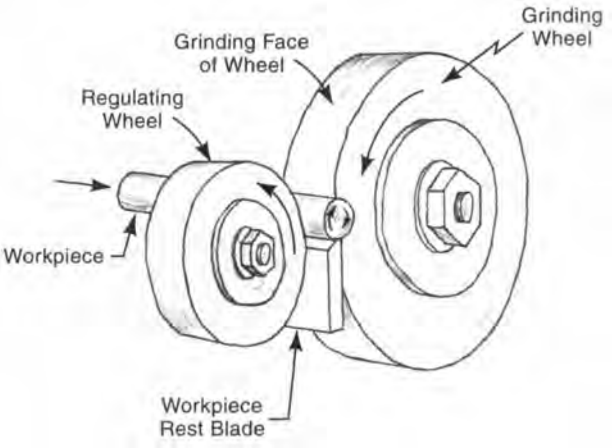

Fig. 3C1b Through-feed centerless grinding.

C1b1. ***through-feed centerless grinding*** - In this method, the regulating wheel is canted slightly, as shown in Fig. 3C1b1, causing the work-

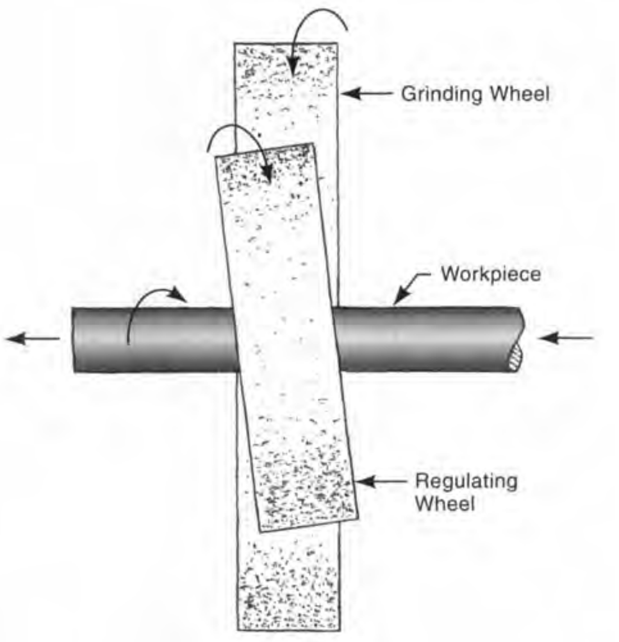

Fig. 3C1b1 In through-feed centerless grinding, the inclination of the regulating wheel induces a sideways thrust on the workpiece.

piece to move axially across the grinding wheel as the grinding takes place. This arrangement provides a rapid operation that can be made automatic if production quantities are sufficient to justify the use of an automatic feed for workpieces to be ground, feeding them end-to-end. The process is used for grinding pins, shafts, and similar parts of constant diameter. Piston pin grinding is a notable application. Parts that have heads, projections, or shoulders that would block the movement of the workpiece through the machine, cannot be through-feed centerless ground.

C1b2. ***infeed centerless grinding*** - differs from the through-feed process in that the part does not move axially. Stops in the machine prevent axial movement until the part is ejected. Instead, the grinding wheel is fed into the work once the workpiece is positioned. After grinding, the wheel retracts, the part is removed or ejected, and another is inserted. If the grinding wheel is dressed with a form, that form is ground into the workpiece. Tapers, multiple diameters, grooves, and other irregular shapes can be ground so long as the grinding wheel is appropriately dressed. The process is also useful when a portion of the workpiece is larger than the surface to be ground. It is illustrated schematically in Fig. 3C1b2. The process is fast but not quite as rapid as the through-feed method since workpieces must be inserted and removed individually. The process is used in the manufacture of ball bearings and parts not having a uniform diameter.

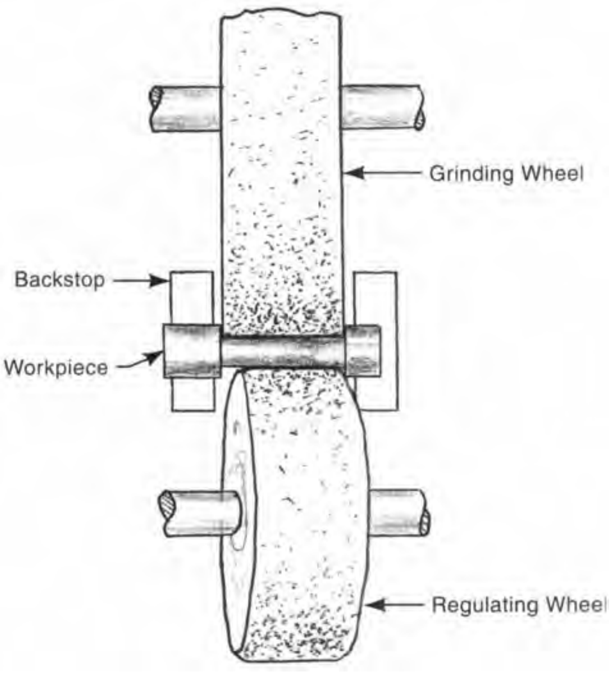

Fig. 3C1b2 Infeed centerless grinding. The method is used when a portion of the workpiece is larger than the ground surface. The workpiece is placed in position; the grinding wheel is fed into the work; the wheel retracts after grinding and the workpiece is removed or ejected.

C1b3. ***end-feed centerless grinding*** - is used for tapered parts. Either the regulating wheel or the grinding wheel, or both, are dressed to provide the desired taper angle. The two wheels and the workrest blade are set in fixed relationship to each other. There is a stop to control the position of the workpiece, which is fed and removed axially. Fig. 3C1b3 shows the process.

C2. ***internal grinding*** - is a process for finish machining existing round holes. It normally is performed on a lathe-like machine. The workpiece is held in a chuck or faceplate holding fixture and rotated about the axis of the hole to be ground. The rotating spindle carrying the small grinding wheel is inserted into the hole and then fed radially to contact the surface. The wheel can be cylindrical or dressed with a form. If the internal surface to be ground is cylindrical, the wheel is also traversed axially. Diameter control can be maintained by dressing the grinding wheel with a diamond tool in a fixed position with respect to the axis of the hole. Internal grinding is most commonly used to finish machine precision holes in hardened workpieces. Large, heavy parts are internally ground on vertical spindle machines since loading and positioning such parts is easier if the rotary surface is horizontal. If the large workpiece is too bulky or unbalanced to rotate, it is held in a fixed position and the grinding wheel is moved in a planetary motion around the hole's axis, as in jig boring.

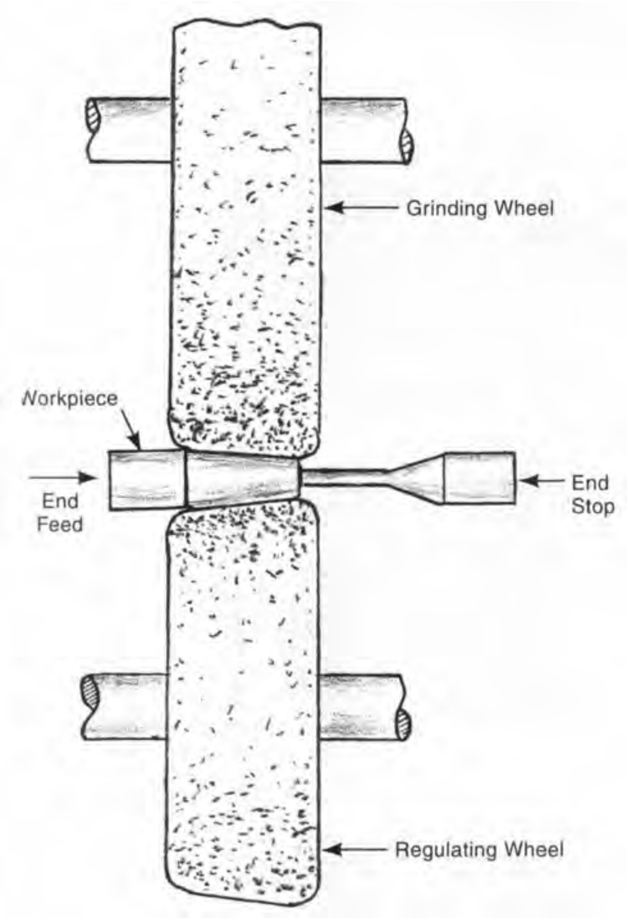

Fig. 3C1b3 End feed centerless grinding is useful when the surface to be ground is tapered. The workpiece is positioned and removed axially.

C2a. ***internal centerless grinding*** - can be used to finish machine sleeves, rings, and similar parts. As illustrated in Fig. 3C2a, the workpiece is held between three rolls, which locate it and provide rotation. The grinding wheel is inserted into the center hole and fed radially to contact the inner surface of the hole as in regular internal grinding. The process insures concentricity between the outer diameter of the part and its center hole . It is suited to mass production situations because the part does not have to be placed in a chuck, and handling is simplified. The grinding of bearing raceways is a common application. Sleeves and cylinder liners are also ground by this method. Tapered holes can be ground on some machines that allow the axis of the grinding wheel to be set at an angle to the axis of rotation of the workpiece.

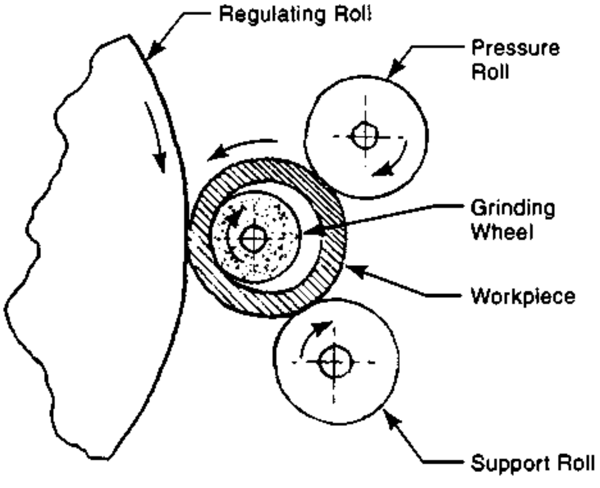

Fig. 3C2a Internal centerless grinding.

C3. ***surface grinding*** - moves the workpiece in a horizontal plane so that it passes under a revolving grinding wheel which contacts it and removes surface material. The result is a part with a flat, smooth surface and an accurate thickness or height. Various arrangements of grinding wheels and various table movement methods can be used. Major arrangements are shown in Fig. 3C3. The table movement is most often reciprocating but rotary tables are also common. The wheel spindle may be horizontal or vertical. The latter requires a cup-shaped or segmented wheel, which cuts on its face.

The most common method for holding the workpiece is with a magnetic chuck, although holding fixtures and other methods may also be used. Surface grinding is also used to sharpen cutting tools. For some applications, especially when heavier metal removal rates are appropriate, the operation may be carried out with an abrasive belt (passing over a roller at the point of contact) rather than a bonded wheel. When the wheel is dressed with a form, the workpiece surface can be ground with that shape instead of a flat surface.

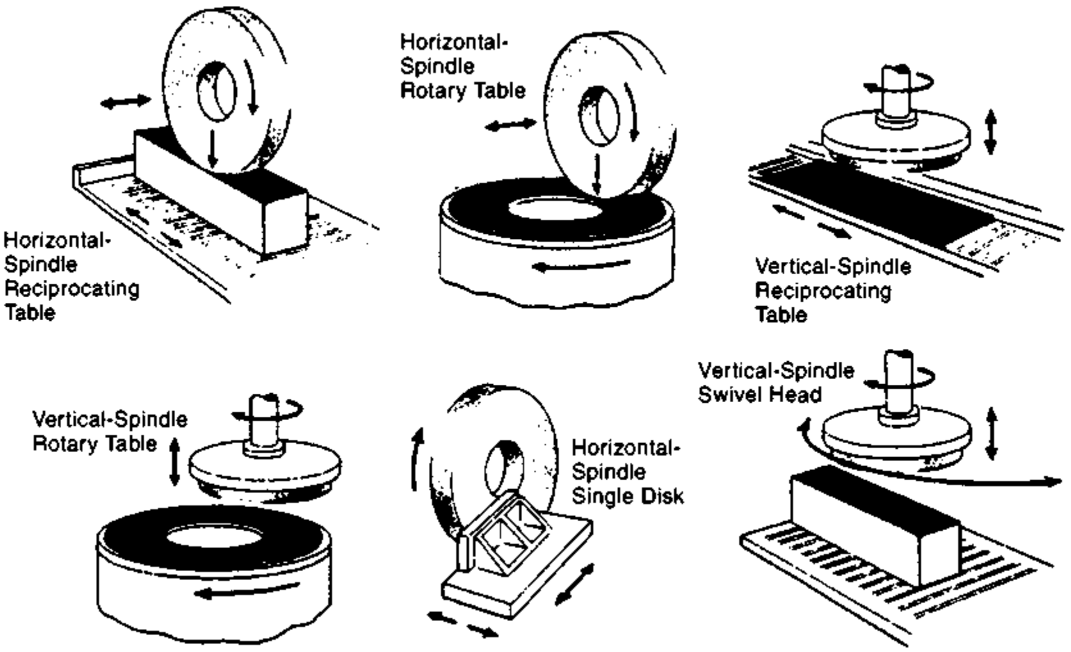

Fig. 3C3 Various equipment arrangements for grinding flat surfaces. (*Courtesy American Machinist, Penton Media, Inc.*)

C3a. ***horizontal spindle surface grinding*** - is surface grinding with a horizontal grinding wheel spindle. The wheel cuts on its periphery. The table may be either circular with a rotational motion or, more commonly, rectangular with a reciprocating motion. In both arrangements, the wheel advances perpendicularly to the basic direction of motion with each cycle of table movement, and thus generates a flat surface. See Fig. 3C3. This approach is used extensively in tool shops to make and recondition dies and to produce machine surfaces on which there are moving parts. With a reciprocating table, horizontal-spindle surface grinding can be used to machine slots in hardened workpieces. By dressing a form on the grinding wheel, the ground surface can be given a form rather than a flat surface.

C3b. ***vertical spindle surface grinding*** - uses a grinding wheel mounted on a vertical spindle with either a rotary or reciprocating table. Various methods are used to move the wheel across the work, as shown in Fig. 3C3. The cup-shaped, segmented, or cylindrical wheel covers a larger area than the side of the wheel does in a horizontal spindle arrangement, so cross feed of the worktable or wheel may not be necessary. These machines are typically used in production applications, while horizontal-spindle machines are more common in toolroom or jobbing work. Vertical spindle machines are used in the manufacture of cylinder head surfaces, gear and pulley faces, and other moving parts that require flat, smooth, surfaces. Weldments, castings, and forgings are ground on these machines. These parts usually have somewhat liberal tolerances for dimensions and surface finish; however, vertical spindle machines have the capability of producing the fine finishes and close tolerances typical of toolroom work. Some machines have more than one spindle and thus can do rough and finish grinding in one pass, or can grind several surfaces of the workpiece simultaneously.

C3c. ***creep-feed grinding*** - is an abrasive machining process capable of heavy stock removal.

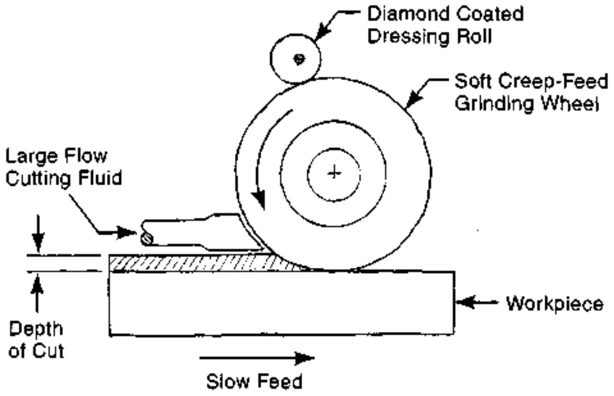

Fig. 3C3c Creep feed grinding. Note the slow feed, large depth of cut, soft wheel, and heavy flow of cutting fluid.

It is particularly applicable to hard materials that would be difficult or unfeasible to machine with a milling cutter. The depth of cut normally ranges from 0.20 to 2 in (5 to 50 mm), much more than in conventional grinding, but the table speed is low, 0.4 to 20 in (1 to 50 cm) per minute. The process thus resembles milling, but the grinding wheel takes the place of the milling cutter. The grinding wheel is soft and made with a very open porous structure to provide space for flow of cutting fluid. The wheel spindle is lowered gradually as the wheel wears. Continuous crush-dressing is normally used, and wheels can be dressed with a form if desired. Cutting forces are high and the machine must be rigid and capable of closely-controlled table speeds; otherwise wheel breakage would occur. Fig. 3C3c illustrates the process. Note the "climb milling" direction of the grinding wheel rotation.

C4. ***jig grinding*** - A jig grinder is a precision vertical-spindle machine, similar to a jig borer. It is used for internal grinding. It has a horizontal table that can be moved and located very accurately. The spindle head contains a high-speed grinding head that rotates the grinding wheel about its axis but that axis can also revolve in a planetary motion. The head can also move vertically with reciprocating motion. Thus, holes can be ground to very accurate locations and diameters and, as the head reciprocates vertically, to high levels of cylindricity. The machine is used for finish grinding of hardened dies, molds, jigs, and fixtures.

C4a. ***tool post grinding*** - involves the mounting of a power-driven grinding wheel for either external or internal grinding on the tool post of a lathe. The wheel then performs conventional grinding operations on parts held in the lathe. This method is a useful means to provide cylindrical grinding in shops not equipped with the conventional cylindrical grinding machines. Care must be taken to avoid damage to the lathe components from trapped grinding dust from the operation.

C5. ***low-stress grinding*** - is a variation of conventional grinding in which the objective is to minimize stresses developed in the workpiece by the grinding operation. It differs from conventional grinding in that very low wheel infeed or downfeed rates, frequently dressed coarse, softer, open-grain wheels, and liberal flow of coolant are used. Wheel speed also may be low. Abrasive grains in the grinding wheel should be sharp, and wheels should not be allowed to become loaded. The process is applicable when the part to be ground is subject to high stresses in use or is susceptible to damage from heat. Parts made from some materials such as high-strength steels, cobalt alloys, titanium alloys and high-temperature nickel alloys that are particularly sensitive to surface cracking and residual stresses from conventional grinding, can be finish-ground with this approach[2].

C6. ***plunge grinding*** - is simply a center-type grinding operation where there is no transverse feed of the grinding wheel. Instead, the wheel is fed directly into the work. If the wheel is dressed with a form, that form is ground into the workpiece. If the width of ground area is no more than the width of the wheel, the operation can be referred to as plunge grinding. The term "in-feed grinding" is also used.

C7. ***disc grinding*** - is a means for producing flat surfaces. The workpiece is held against the flat

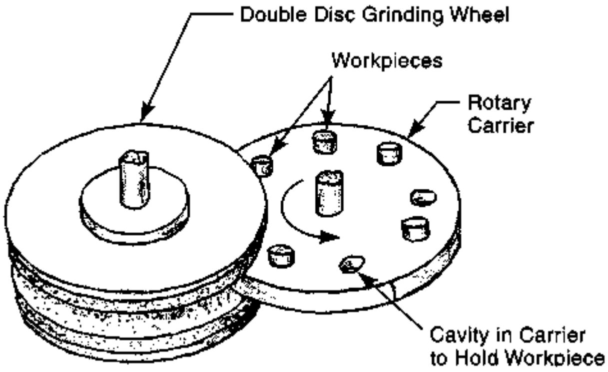

Fig. 3C7 Double disc grinding. Both the top and bottom surfaces of the workpiece are ground at the same time.

side (face) of a large rotating abrasive disc. (See Fig. 3C3.) The operation can be performed manually when dimensional requirements for the part are not severe. In production situations, *double disc grinding*, as illustrated in Fig. 3C7, is sometimes employed. The workpiece is fed between two abrasive discs which grind the opposite surfaces of the workpiece at the same time, thus controlling flatness, thickness, and parallelism in the same operation. Parallelism and flatness of surfaces is particularly good with these machines because there is no magnetic chuck to pull down non-flat parts, only to have them spring back to a non-flat condition after the operation. Double-disc grinders are used in the production of automotive connecting rods, disc brake rotors, compressor vanes, and cast-iron rocker arms.

C8. ***abrasive belt grinding*** - uses an abrasive-coated cloth belt to remove metal. The endless belt runs between a drive wheel and a contact wheel, and the workpiece bears against the belt at the contact wheel. The abrasive grains on the belt are arranged with orientation and spacing to optimize metal removal rates. The process can provide faster metal removal than grinding with a wheel and is then often referred to as *abrasive belt machining*. Metal-removal rates of 30 in^3/min/in (193 cm^3/min/cm) of belt width are feasible with standard belts.[4] This rate is faster than those attainable with milling machines, even under the fastest metal removal conditions. Belts as wide as 10 ft (3 m) allow the entire surface to be ground in one pass. The process can provide lower heat levels than grinding with an abrasive wheel because the belt carries away heat effectively. Lubricants may be used to facilitate the operation. The approach is used for rough metal removal from castings, forgings, and other shapes, especially when the workpiece is large. Surface, cylindrical, and centerless grinding can be performed with abrasive belts. Abrasive belts can also be used for hand grinding and polishing.

C9. ***abrasive jet machining*** - provides cutting action from the effect of finely-powdered abrasive in a high-velocity stream of gas. With the gas carrier, the abrasive and gas are raised to a pressure between 30 and 120 lbf/in^2) (200 and 830 kPa). The stream is passed through a nozzle of 0.005 to 0.032 in (0.13 to 0.81 mm), and reaches a velocity of 500 to 1000 ft/s (150 to 300 m/s). The stream is directed at the desired place on the workpiece. This can be done by hand for rough cuts, stripping, or deburring. However, precision cuts require the nozzle to be mounted on suitable equipment. Masks of rubber, glass, or copper may be used to help limit the abrasive action. The process can be used for drilling, cutting, etching, trimming, cleaning, and deburring operations on a variety of metals and non-metals, especially hard and fragile materials. (The process is less suitable for softer materials that may trap the abrasive.) Ceramics, glass, silicon, and mica are machined with this method. Sheets of these materials can be cut and drilled, and abrasive jet can produce intricate holes that would not be easily made by other methods. Other applications are marking identification on workpieces, trimming, and cleaning electronic components, and removing surface coatings including plating. The process is illustrated schematically in Fig. 3C9. Cutting rates are slower than those achieved with more conventional processes but there is no heat damage to the workpiece.

C10. ***abrasive flow machining (AFM)*** - uses a viscous, putty-like abrasive medium which is pumped so that it flows against the workpiece. The abrasive particles in the medium rub against the workpiece, gently removing surface material.

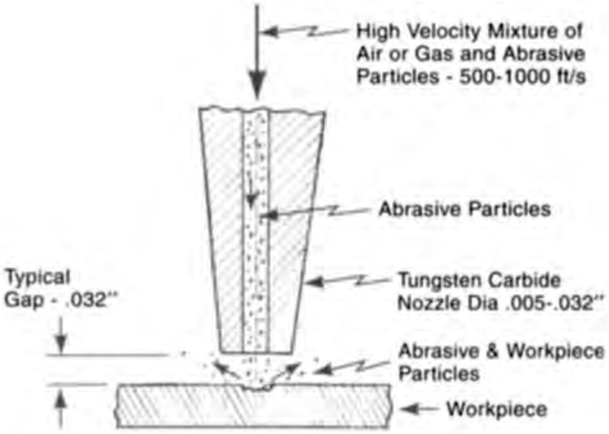

Fig. 3C9 Abrasive jet machining - A high velocity stream of air or gas and abrasive particles impinge on the workpiece and remove workpiece material. The process is particularly useful in drilling, cutting, or engraving hard, brittle materials including non-metallic materials. (*Courtesy Omax Corporation.*)

The process is used to round sharp corners, finish edges, remove recast layers from EDM or laser machining, polish surfaces, and remove burrs (See K1.) AFM is particularly useful when the area to be machined is not accessible for other methods. In practice, two cylinders on opposite sides of the workpiece are used to contain and pump the medium, which flows back and forth repeatedly (through as many as one hundred cycles) until sufficient material is removed from the workpiece.

C11. ***ultrasonic machining*** - utilizes an abrasive in a water slurry and a shaped tool. With the abrasive between the tool and the workpiece, the tool is vibrated at ultrasonic frequency. The vibration of the tool drives the abrasive particles against the workpiece, cutting a cavity that has the same shape as the tool. The frequency of vibration is usually between 19,000 and 25,000 Hz with a low amplitude - 0.0005 to 0.0025 in (0.013 to 0.063 mm). The abrasive slurry is pumped through the gap between the tool and the work. The gap ranges from 0.001 to 0.004 in (0.025 to 0.1 mm). The stainless or carbon steel tool is attached to an ultrasonic generator through a "horn", usually of Monel metal. Fig. 3C11 illustrates the process schematically. It is most advantageous for shallow cuts in hard, brittle, non-conductive materials that are difficult or unfeasible to cut by other methods. Slots, holes, and cavities of various shapes can be produced in ceramics, glass, carbide, tool steels, honeycomb material, and gem stones. Holes and cavities can be non-round and curved. Material removal rates are low, but there are no heat effects, no burrs, and surface stresses are low. Holes have some inherent sidewall taper.

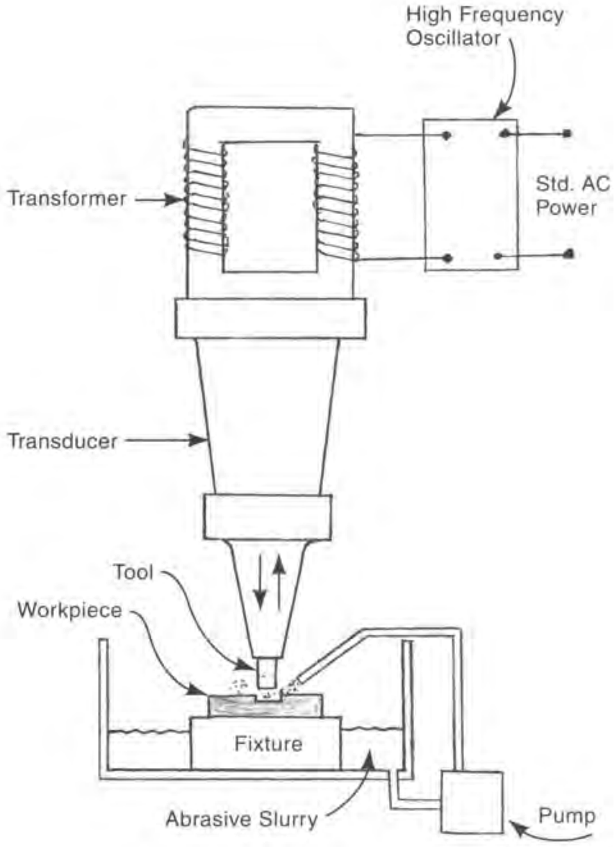

Fig. 3C11 A schematic view of a typical arrangement for ultrasonic machining.

C11a. ***rotary ultrasonic machining*** - uses a rotating tool, coated with diamond abrasive and ultrasonically vibrated, to machine hard and brittle materials. There is no abrasive slurry but a liquid coolant, usually water, is used. Milling, drilling, and threading operations can be performed, but drilling is the primary application. Non-metals: glass, alumina, ceramic, quartz, sapphire, and composite materials are normally processed.

D. Milling

Milling is a means of creating a desired surface with a rotating multi-toothed cutter. Each tooth of the cutter removes material as the workpiece advances against it. The axis of rotation of the cutter may be either horizontal or vertical. The cutter can provide cutting action on its side or at its end (face), or both. The cutter rotates rather rapidly and its position is normally stationary; the work moves past the cutter with a suitable depth of cut at a relatively slow feed rate. Milling is the most common machining operation for producing flat surfaces, but slots, and contoured or stepped surfaces and screw threads can also be produced. A variety of milling operations and the cutters used are illustrated in Fig. 3D. (Also see ***machining centers***, T.)

D1. ***face milling*** - shown in Fig. 3D1, produces a flat surface at a right angle to the axis of rotation of the cutter. Depending on the depth of cut, some machining also takes place on the periphery of the cutter. For flat surfaces, face milling is generally preferable to peripheral milling from the standpoints of tool economy, simplicity of set-up, and cutter rigidity. However, the operation is limited to flat surfaces.

D2. ***peripheral milling*** - The milled surface, if flat, is parallel to the axis of rotation of the cutter, and is produced by cutting teeth located on the periphery of the cutter body. The operation is usually performed on horizontal-spindle machines. The milling cutter or cutters are mounted on an arbor that has outboard support. The surface may be flat or contoured, depending on the profile of the cutter. Flat and contoured surfaces, slots, and key-ways, are machined by this method. (Fig. 3D, in views a), b), f), and g), shows peripheral milling. Views c), d), and e) show both peripheral and face milling.)

D3. ***end milling*** - uses a cutter, commonly of smaller diameter, with teeth on both the end (face) and periphery. Fig. 3D, in views n) and o), illustrates the operation. The approach is versatile in that slots, recesses and profiles can be machined. Machining can also be carried out in areas not accessible to other types of cutters. However, the length-to-diameter ratio of end mills is high and they can be supported only at one end, so they are less rigid than cutters for other milling methods. Lighter feeds may be required to reduce cutter deflection. Material removal rates are less than with other milling methods and accuracy may not be as great.

D4. ***slab milling*** - is peripheral milling with cutters that produce a flat surface over a wide area. The axis of rotation of the cutter is parallel to the machined surface. The cutter often removes large amounts of material. Sometimes, two or more cutters are used per arbor with opposing helixes to balance cutting forces. See view b) of Fig. 3D.

D5. ***form milling*** - When the peripheral cutting edges of the milling cutter are ground with a form rather than in a straight line, that form is transferred to the workpiece as the milling operation proceeds. The operation is called form milling and is illustrated schematically in Fig. 3D, views i), k), l) and m). Milling of gear teeth is a common application of this approach.

D6. ***gang milling*** - is simply milling with more than one cutter on the arbor of the milling machine. This produces multiple surfaces on the workpiece with one pass of the cutters. Also see straddle milling, as follows.

D7. ***straddle milling*** - involves the use of two cutters on one arbor with a space between them. Two surfaces are cut in one pass, but the area between them is not machined, as illustrated in Fig. 3D, view Q).

D8. ***fly cutter milling*** - involves the use of a single-point cutter rather than a multiple-tooth cutter to perform a milling operation. It is face milling with only one cutting tooth. The method is useful for producing

Next Page

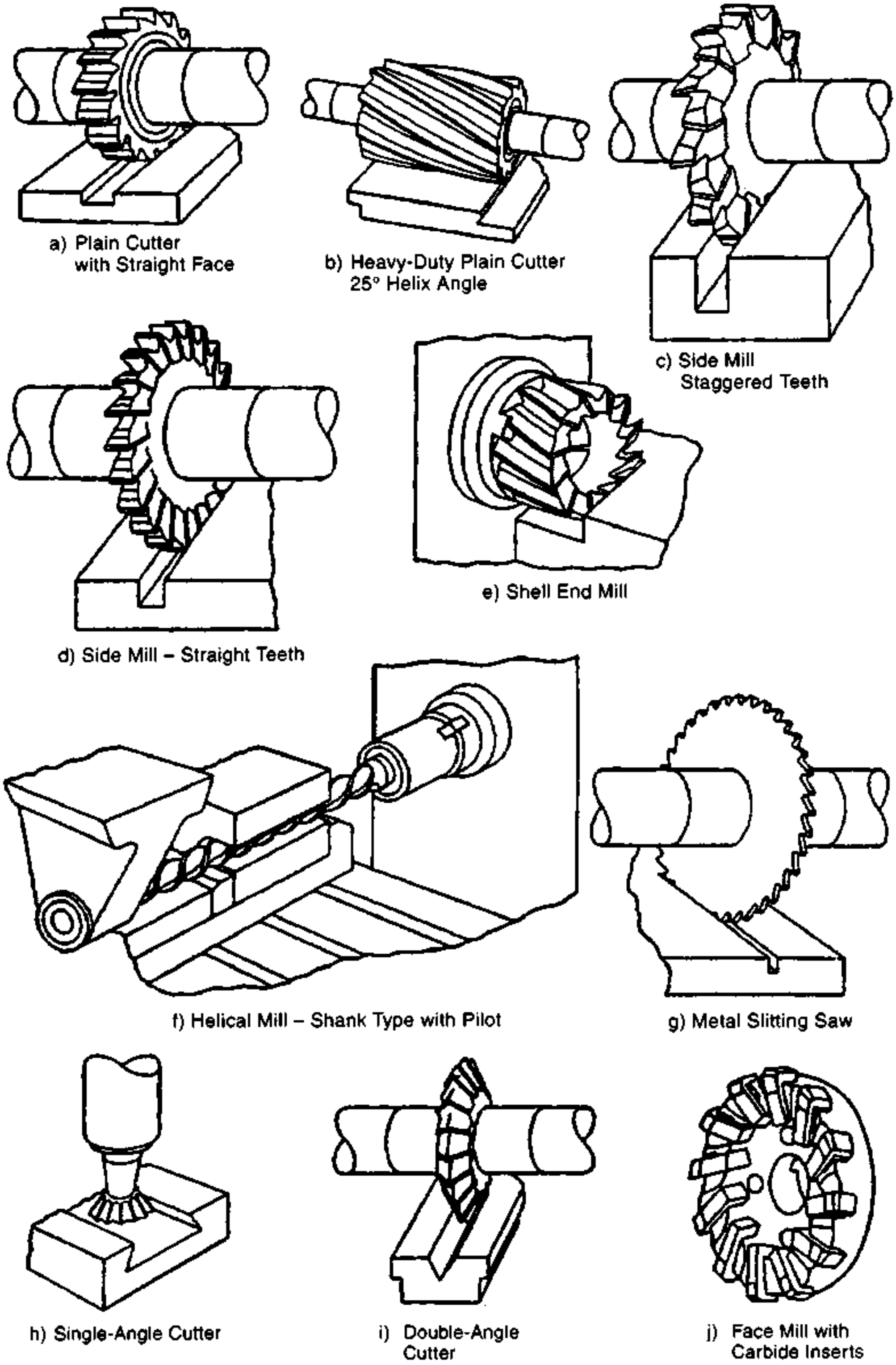
a) Plain Cutter with Straight Face

b) Heavy-Duty Plain Cutter 25° Helix Angle

c) Side Mill Staggered Teeth

d) Side Mill – Straight Teeth

e) Shell End Mill

f) Helical Mill – Shank Type with Pilot

g) Metal Slitting Saw

h) Single-Angle Cutter

i) Double-Angle Cutter

j) Face Mill with Carbide Inserts

Fig. 3D A collection of milling cutters and the operations that they perform. (*from LeGrand, American Machinist's Handbook, 1955, McGraw-Hill Companies.*)

Previous Page

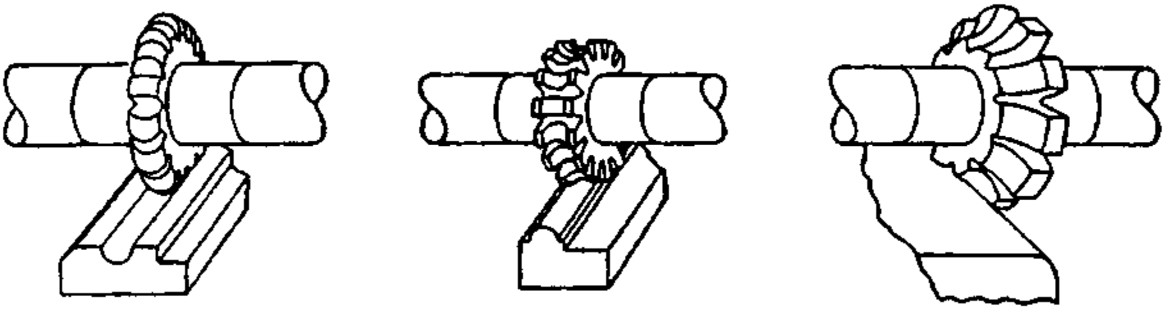

k) Convex Cutter

l) Concave Cutter

m) Corner-Rounding Cutter

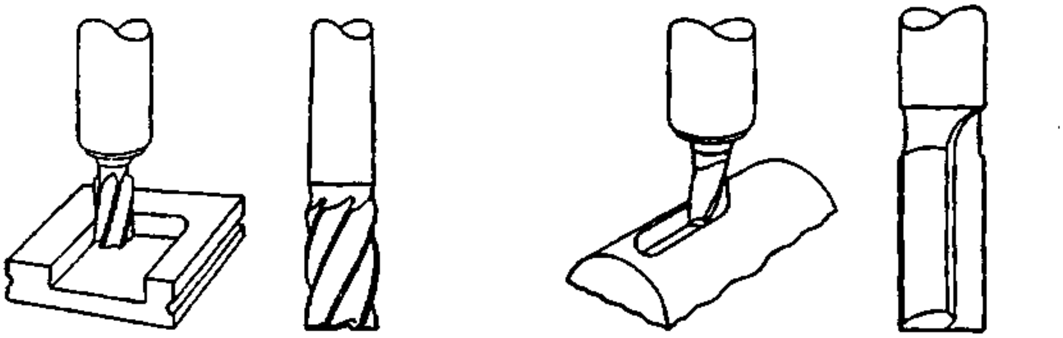

n) End Mill Taper Shank

o) Two-Lip End Mill Straight Shank

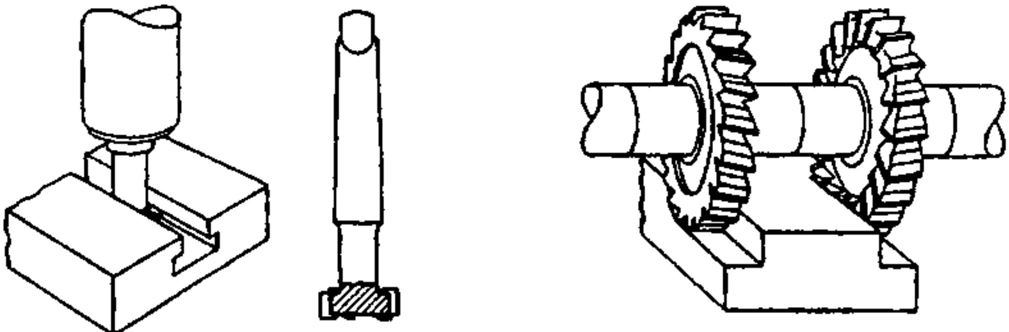

p) T-Slot Cutter

q) Half-Side Cutters 12 Helix

Fig. 3D *(Continued).*

flat surfaces in a tool room situation where the optimum multiple-toothed cutter may not be available. Obviously, cutting feed rates are much less than with face mills but may be satisfactory when flycutters are the only tools available and requirements are for only one piece or a small quantity.

D9. ***pin routing*** - involves the use of a template to guide the movement of a high speed routing cutter (small diameter end mill). Typically, the process is used to blank flat stock of sheet metal or other materials. Stacks of thin material can be cut by this method, to produce multiple parts.

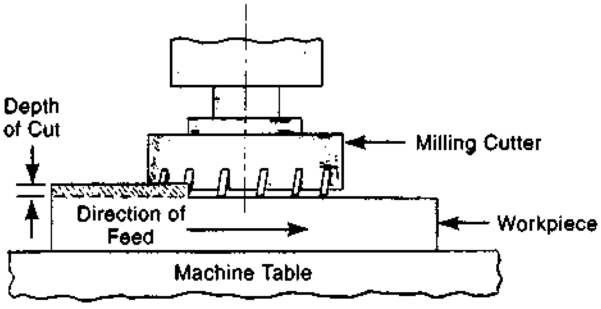

Fig. 3D1 Face milling.

D10. ***spotfacing*** - is a simple operation, shown in Fig. 3B2 view c) that is normally used to provide a small flat bearing surface, perpendicular to the axis of a hole, for a bolt head or nut. An end-cutting rotating tool is fed into the workpiece along the axis of the bolt hole, often with a drill press rather than a milling machine. Depth of cut is often not critical as long as the surface machined is flat and perpendicular to the axis of the bolt hole. The operation is the same as counterboring except that the depth of cut is shallow, only enough to create a flat machined surface. It is most commonly performed on castings and forgings where the surface prior to the operation has some irregularity.

E. Screw Threads

Screw threads are made with a large number of different methods involving both machining (cutting) and forming processes. Cutting methods include the use of hand-operated taps and dies for internal and external threading, and machines for single-point screw-thread cutting, thread-cutting die heads, thread milling, and thread grinding. Forming methods include rolling of external threads and cold-forming of internal threads.

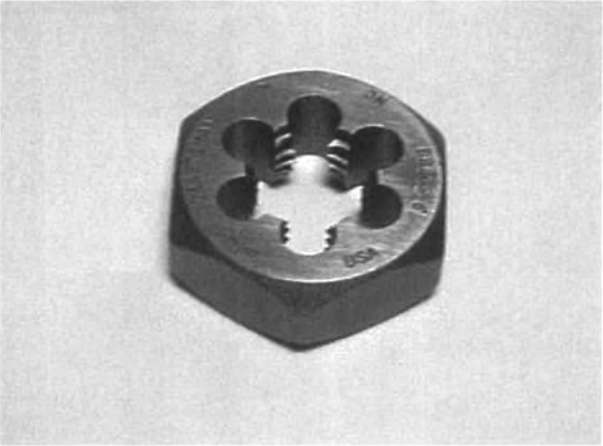

Fig. 3E1 A hand die for cutting external threads.

E1. ***hand-die external threading*** - A typical external hand-threading die is illustrated in Fig. 3E1. These are called button or acorn dies and are useful for cutting screw threads in prototype and limited-quantity production. The die is placed on the end of the screw blank and is rotated with a wrench-like tool. It feeds itself forward at the lead rate of the screw as it cuts the threads.

E2. ***internal thread tapping*** - utilizes taps such as that shown in Fig. 3E2. The tap is rotated like a drill or reamer and is self-fed axially into the hole in the workpiece to create an internal thread. Taps can be positioned and fed manually, and rotated with a hand tool, or can be used with a drill press, lathe, automatic screw machine with a tapping attachment, or a special tapping machine. Tapping machines and attachments have the capability of reversing the rotation of the tap to remove it from the work after the thread cutting is

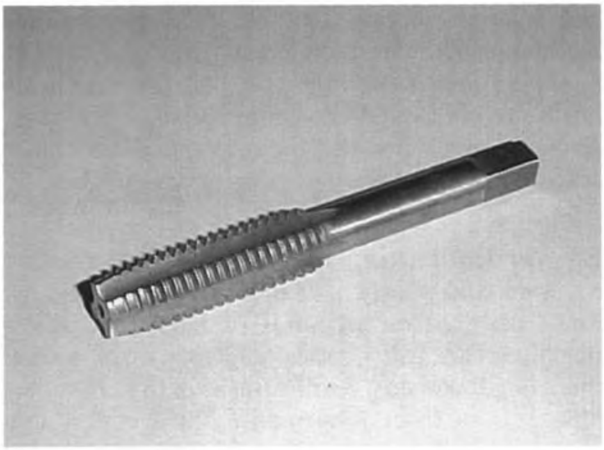

Fig. 3E2 A solid tap for machining internal screw threads.

Fig. 3E2-1 A collapsible tap. (*Courtesy Landis Threading Systems.*)

completed. These solid taps are used for internal threads of 0.050 in (1.2 mm) to 6 in (150 mm) diameter[5].

Collapsible taps automatically retract the cutters to clear the new threads and do not have to be reversed for removal, but are not available for diameters less than about 1¼ in (32 mm). They are usable for diameters up to about 24 in (600 mm)[5]. See Fig. 3E2-1.

E3. ***single-point screw-thread cutting*** - is a lathe operation. A form cutting tool that has a profile corresponding to that of the space or spaces between the required screw threads makes repeated passes along the workpiece. The cutter is attached to the lathe carriage and is moved longitudinally along the bed by the lathe's lead screw, which is geared to provide the rotational rate needed to produce a screw of the proper pitch. Both external and internal threads can be generated by this method, as shown schematically in Fig. 3E3. The method is used for large screws, for which die heads are not available or impractical, when quantities are small, or when the material is difficult to machine.

E4. ***thread cutting die heads*** - are efficient, accurate, and widely used in production threading. They are used on all kinds of lathes and screw machines, on drill presses, and as part of special threading machines. As illustrated in Fig. 3E4, they have sets of insertable multi-toothed cutters that are changeable when different pitches of threads are to be machined or when the cutters need re-sharpening. Like button dies, die heads are self-feeding at the lead rate of the thread. At the end of the cut, the cutters retract automatically for rapid withdrawal. Perhaps the largest single application is pipe threading, on special small machines that can be transported to building construction sites.

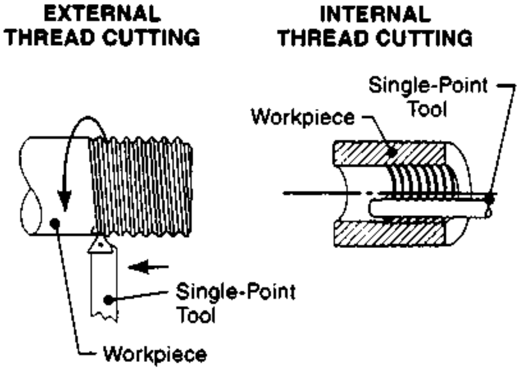

Fig. 3E3 Single point machining of external and internal screw threads. (*from Manufacturing Processes Reference Guide, R.H. Todd, D. K. Allen, and L. Alting, Industrial Press, New York, 1994.*)

E5. ***thread milling***[5] - utilizes a form-milling cutter. Both the workpiece and cutter rotate. Most cutters are the multiple-rib type shown in Fig. 3E5, but single-rib cutters are also used, though cutting one thread at a time requires more time. The method is applicable to both internal and external threads. (In internal thread milling, the cutter diameter should not exceed 1/3 of the hole diameter.) Thread

Fig. 3E4 A die head for external threads with inserted multi-toothed cutters. (*Courtesy Landis Threading Systems.*)

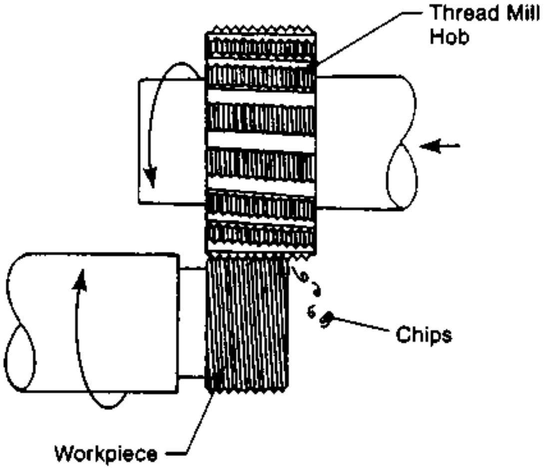

Fig. 3E5 Thread milling of external threads. *(from Manufacturing Processes Reference Guide, R.H. Todd, D. K. Allen, and L. Alting, Industrial Press, New York, 1994.)*

milling is used in situations where die-head cutting or tapping is difficult, for example, in difficult-to-machine materials, long threaded lengths, high helix-angle threads, or large, coarse-pitch threads. However, milling is not suitable for square threads or others with a flank angle nearly 90 degrees from the axis.

E6. ***thread grinding***[6] - is used when particular accuracy and surface smoothness are required, when heat-treated workpieces are threaded, or when the material is otherwise difficult to machine. Threads are ground in stainless and tool steels and in sintered iron components, particularly when they have been heat treated for hardness or are used in precision applications such as adjustment screws and feed screws. Both center-type (3C1a) and centerless cylindrical grinding machines (3C1b) are used. The wheels may be dressed to grind multiple ribs or a single rib. In either mode, the workpiece moves axially across the wheel as it rotates.

With center-type grinding, several passes are usually required. Center-type grinding can be used on short runs, but is not limited to small-quantity production.

With centerless grinding, the wheel is always dressed for multiple-rib grinding. The workpiece is first ground to the correct diameter and then the threads are made as the work passes across the wheel. Centerless thread grinding is more of a high production method, used when quantities are 10 or 15 thousand per lot or more. Process times are very short but setups require more time. Fig. 3E6 shows centerless thread grinding.

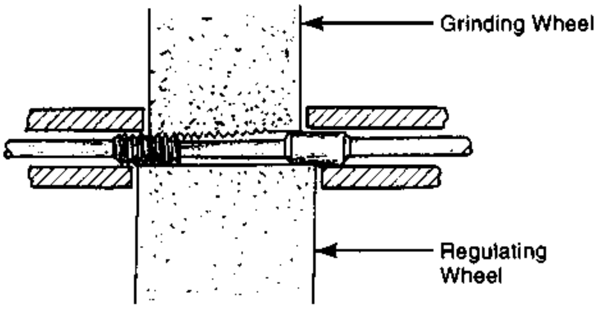

Fig. 3E6 Centerless thread grinding of headless screws.

E7. ***thread rolling*** - is a cold-forming method for making external screw threads. The blank workpiece is rolled between opposing dies which have a negative screw thread profile. The dies may be flat or cylindrical. Die heads, somewhat similar in appearance to cutting die heads, are often used, but these units have hardened rolling tools in place of the cutters. A third method allows several blanks to be run at one time between a cylindrical die and a concave die in planetary fashion. With all these process variations, the screw thread produced is of high quality with an accurate thread and smooth surface finish. No material is wasted and there are strength advantages because of the cold-working of the workpiece material. However, the diameter of the blank to be threaded must be accurate for the finished part to have the correct pitch diameter. The operation is rapid and is particularly suited to mass production of threaded fasteners. The flat-die method is illustrated in Fig. 3E7.

E8. ***cold-form tapping of internal threads*** - differs from tapping with cutting taps as described above, in that the workpiece metal flows rather than being cut and removed to form the threads. Both kinds of taps are used in essentially the same

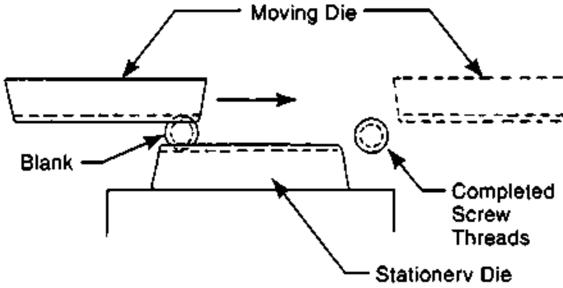

Fig. 3E7 Thread rolling with flat dies.

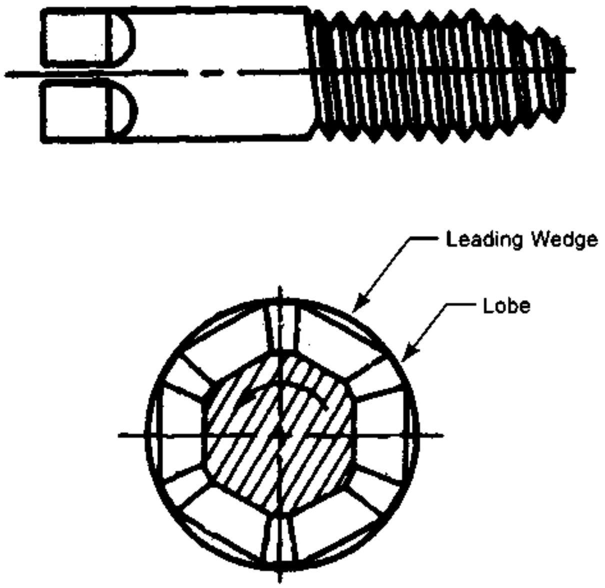

Fig. 3E8 A typical thread forming tap.

way and they look somewhat similar. A cold-forming tap is illustrated in Fig. 3E8. Cold-forming taps produce strong screw threads but the threads formed fill only 65 percent or less of the space of full threads. Soft and ductile materials must be used. Tapping speeds are higher than with cutting taps.

F. Broaching

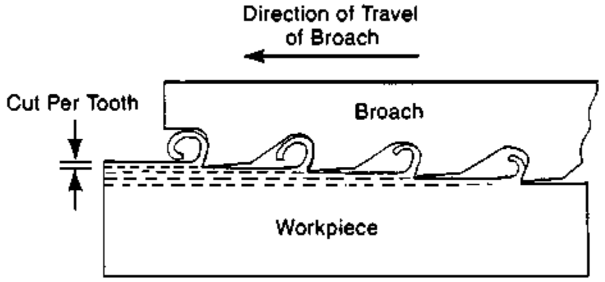

Fig. 3F The cutting action of a broach. (*Drawing courtesy J. R. Casey Bralla.*)

Broaching is a high-production machining operation that involves the one-way movement of a broach, a cutting tool with a series of progressively-stepped teeth. The teeth move parallel to the surface being machined and each one removes a precise amount of material. The action is similar to that of a saw except that each tooth is set slightly higher than the one that precedes it and is wide enough to machine the entire surface. As with a saw, the spaces between the teeth hold the chips until the teeth pass from the workpiece. One pass of the broach results in the completion of the operation. The broach can be pulled or pushed across the work. Fig. 3F illustrates the cutting action schematically. Broaching is used to machine holes, (particularly non-round holes), flat surfaces, splines and slots. One common application is the machining of keyways in pulleys and gears, as shown in Fig. 3F1. The initial teeth to contact the workpiece are often designed to provide a roughing cut, while the final teeth provide finishing to the dimension desired. In that way, the operation can provide both high

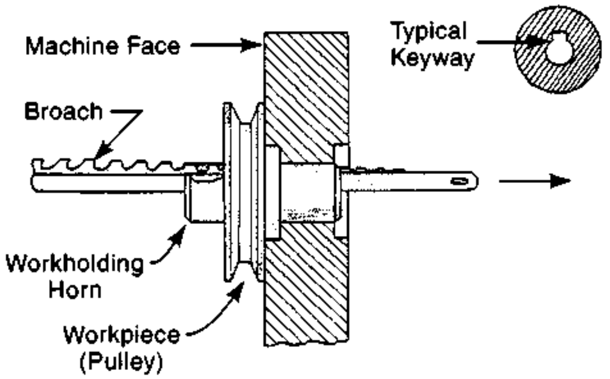

Fig. 3F1 Internal broaching of a keyway in a pulley and the cross-section of a typical broached keyway. The pitch of broach teeth is exaggerated to illustrate the process.

accuracy and excellent surface finish. The operation is rapid and particularly suited to mass production conditions. Operator skill requirements are not high because the needed precision is incorporated into the broaching tool. However, broaches are expensive and this is why broaching is chiefly found in mass production situations where the tooling cost can be amortized. However, some internal shapes are not practical to machine by other methods and that is why broaching is commonly used for keyways, splined-shaped holes, dovetail slots, and "fir tree" shaped slots for turbine blades. The equipment required for broaching ranges from simple arbor presses for keyway broaching, to huge special machines used in the automotive industry for surface-machining engine blocks and other large components. Holes as small as 0.050 in (1.3 mm) and surfaces as large as 20 in (0.5 m) wide, have been machined with this method.[4]

F1. ***internal broaching*** - is machining by broaching the inside surface of a hole or other opening in the workpiece. The most common broaching operations produce keyways, key slot openings in locks, spline-shaped openings, and other non-round enlargements of holes in pulleys, gears, or other parts that are to be fastened to shafts. There must be an initial hole or opening in the workpiece to provide room for entry of the broach. Helical surfaces can be cut with helical broaches if the workpiece is rotated as the broach advances. Fig. 3F1 illustrates internal broaching of a keyway.

F2. ***external broaching*** - takes place when the broaching tool machines an outside surface of a workpiece. Examples are the machining of flat surfaces, cam surfaces, and gear or ratchet teeth.

F3. ***pot broaching*** - uses a ring- or tubular-shaped broaching tool with the cutting teeth on the inside. Normally, the workpiece is pushed through the tool with hydraulic force. The tool cuts the entire workpiece periphery in one pass. Machining of gear teeth is a typical application.

G. Sawing

Sawing is the parting of material through the use of a narrow cutter, a saw, which contains a series of cutting edges that pass against the work in a continuous or reciprocating motion. As the cutter is advanced into the work, material is removed by each tooth, and a slot is formed, eventually extending through the entire thickness of the workpiece, and severing it into two pieces. The chip produced by each tooth is carried in the space between the teeth until the teeth exit the workpiece. The cutter can be in disk, band, or reciprocating blade form. Cutting teeth are typically set, i.e., offset slightly and alternately from both sides of the saw blade to provide a slightly wider cut (kerf) than the thickness of the blade so that there is room for its passage. The operation is used to cut billets, extrusions, castings, forgings, and various other shapes into blanks for further operations. Bars of various cross sections, rods, angles, and various other structural sections are cut to length by sawing.

G1. ***circular sawing*** - uses a saw in the form of a circular disk, with cutting teeth on the periphery. As the circular saw rotates, it is fed against the workpiece, machining a narrow slot in the workpiece and eventually severing it. Circular saws for metal cutting are sometimes called *cold saws* because they don't significantly heat the workpiece as friction saws do. They often have inserted cutter teeth of carbide rather than teeth formed of the blade material, or have cutter segments fastened to a center disc. Blades are sometimes large in diameter to permit the sawing of bulky workpieces. Kerfs are considerably wider than those on band or hack-saws because the circular blade must be thick enough to provide rigidity. Accurate and smooth cut surfaces are feasible with this method. The circular saw process is used to make blanks for subsequent operations or to cut structural members to the desired length. Fig. 3G1 illustrates a circular cut-off saw (coldsaw).

G2. ***band sawing*** - is most commonly a cut-off operation. Instead of a circular disk, the saw is an endless steel band with cutting teeth on one edge. The blade moves as it cuts in one direction. Cutting is continuous and blade wear is uniform over the whole length of the blade. Since the blade is normally thin, little material is lost to chip waste and power requirements are modest. The workpiece or the blade can be fed manually or mechanically.

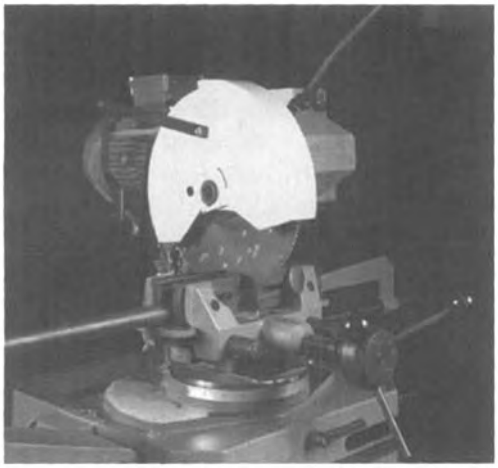

Fig. 3G1 A circular cutoff saw. (cold saw). (*Courtesy Clausing Industrial, Inc.*)

For cutting off, the blade is normally horizontal and is fed mechanically or by gravity. Band saws are also used for contour sawing. (See G3 below.) Band sawing is suitable for thin-walled tubing and other somewhat fragile parts because cutting forces are lower than with other sawing processes.

G3. ***contour sawing*** - uses a band saw. The powered band normally moves vertically downward and the workpiece, resting on a horizontal table, is fed into the moving blade either manually, with or without power assist, or automatically, into the moving blade. The cut can be in a straight line or a curved path, depending on the shape of the part to be produced. Contour work is not uncommon in tool shops for templates, cams, dies, and fixtures. Flat stock is the most common shape cut by this method but material of other shapes is also processed. A quantity of parts of thinner material can be cut in one operation by stacking a number of blank sheets. Views of some typical applications of contour sawing are shown in Fig. 3G3.

G4. ***hacksawing*** - uses a reciprocating saw, either manually or mechanically operated, to perform a cut-off operation. Cutting takes place only on the forward stroke. Feed of the blade is commonly by gravity but hydraulic and other mechanical feeds are often used on production hacksaws. Production hacksaws also incorporate a rapid return stroke to minimize the cutting time. The short, straight blade is less expensive than a bandsaw or circular saw blade but the cutting is less rapid. Once loaded, power hacksaw machines complete the operation automatically, stopping when a limit switch is tripped. Blades and equipment are less costly than those used with other sawing methods.

G5. ***abrasive sawing*** - uses a circular, band, or reciprocating saw blade, with a cutting edge that consists of abrasive particles rather than teeth formed in the edge of the metal blade itself. Thin, circular, cutters of bonded abrasive are most common. Surface speeds are much higher than with conventional sawing. Abrasive sawing is used when the workpiece material is hard or otherwise difficult to cut with metal cutting teeth. Hot metal billets are cut with this method. Cutting is quite rapid with large-wheel, high-horsepower machines. Coolant may be used to improve the finish of the cut surface, reduce burrs, and minimize heat effects. Smaller machines are usually operated manually. Equipment costs are low for this approach but the wheel cost is high compared with other sawing methods.

G6. ***diamond-edge sawing*** - is a kind of abrasive sawing that uses diamond abrasive particles because of particular hardness of the workpiece material. Cutting of ceramics, glass, stone, carbide, hardened die steel, nickel, and cobalt alloys are typical applications. Sufficient coolant and accurate feed control are necessary.

G7. ***friction sawing*** - uses an extremely high speed saw blade that softens or melts the workpiece material with frictional heat. The cutting teeth then remove the softened material with a cutting action. Either a bandsaw or large circular saw is used. The movement of the blade prevents it from overheating since any one part of it is in contact with the hot work for only an instant. However, the blade may also be water cooled. The blade is heavier and not necessarily as sharp as conventional blades. The process is suitable for hardened

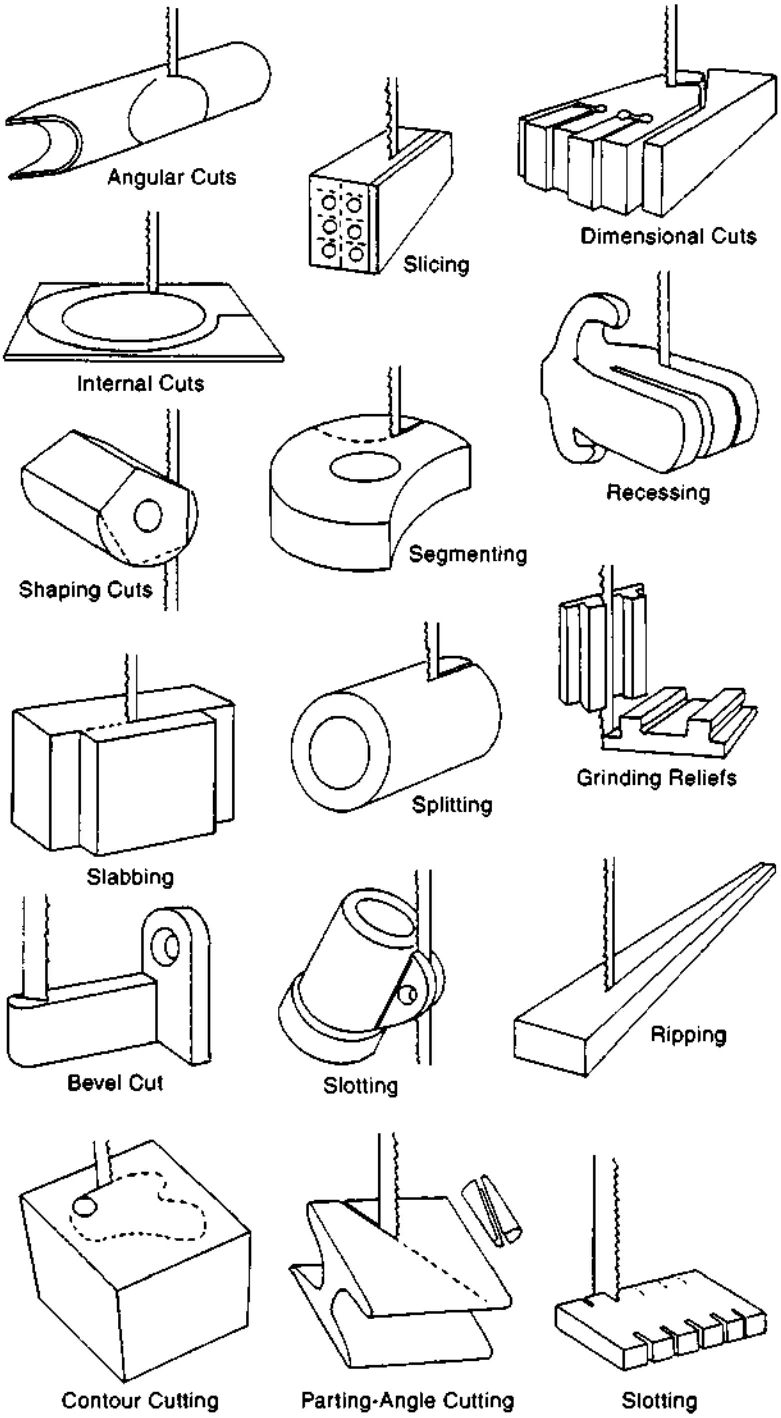

Fig. 3G3 Various contour sawing operations (*Courtesy DoAll Company*).

materials (Rockwell C 42 or more) which can not be cut well with conventional sawing. Material adjacent to the kerf is heat-affected. The method is slightly less accurate and has a poorer surface finish than that produced by other sawing methods. Copper, aluminum, and cast iron are not suitable for the process.

H. Flame Cutting (Thermal Cutting)

Flame cutting involves one of two underlying processes: 1) the severing or cutting of metal pieces by melting a narrow slit. 2) severing or cutting by chemical action wherein the metal oxidizes at high heat. The variety of methods used is discussed below. Flame cutting is most widely used for cutting heavy plate - as thick as 30 in (75 cm) - and structural shapes and sheet where tolerances are not so strict. The cutting torch is often manually guided, especially in field work or when tolerances can be liberal. However, flame cutting machines guide the torch more accurately along straight lines or curved paths. Template tracing, optical tracing of part drawings, numerical- or computer-numerical control are methods used to guide the torch tip along whatever path is required to cut the desired workpiece from the stock to be cut. The process is most often used to cut parts from flat stock, However workpieces of many other shapes can be cut with the process. It is also commonly used in dismantling various structures or equipment. Most flame cutting torches can be portable, so field dismantling is quite feasible.

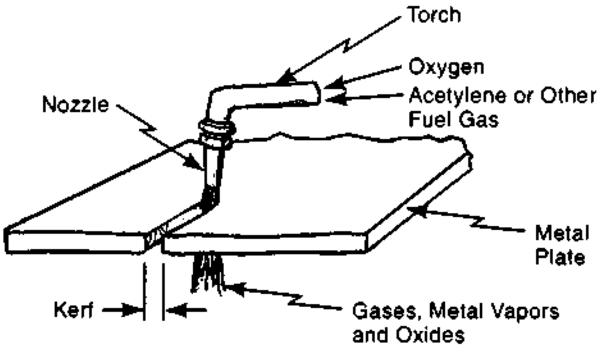

Fig. 3H1 Schematic view of oxy-fuel gas cutting (OFC).

H1. ***oxy-fuel gas cutting (OFC)*** - uses acetylene, natural gas, propane, or hydrogen in combination with oxygen to fuel the process. With ferrous metals, a small area of the workpiece to be cut is first brought to a temperature of about 1600°F (870°C) with a flame of pure gas or a gas/oxygen mixture. When the metal reaches the proper temperature, oxygen is added to the fuel mixture and the workpiece metal in a narrow section is oxidized (burned) with the aid of the oxygen. Iron oxide, in liquid form, is generated and is blown away from the workpiece by the force of the gas stream exiting the torch nozzle. As the torch moves, a narrow slit is made in the workpiece. With non-ferrous metals, oxidizing may not take place, and the metal is removed by simple melting. The torch is commonly held and controlled manually, particularly for work not requiring great dimensional accuracy, but mechanically-held torches controlled by templates, optical tracing, or computer numerical control are also used. The process works best with carbon and low alloy steels. A typical cutting speed for 1 in (25 mm) thick steel plate is 18 in (0.46 m) per minute. When cutting stainless steels, metal powders or chemical additives are incorporated in the stream to improve the cutting action. Some machines have multiple torches and can cut a number of parts from one piece of sheet or plate material at the same time.

Parts are most commonly cut from flat plate. Material from 1/8 to 60 inches in thickness can be cut. Ship building, construction, tank, pressure vessel, and heavy equipment manufacture, are industries that use the process .It is illustrated in Fig. 3H1. Straight or beveled cuts can be made, and welding is a common subsequent operation. There is a heat-affected zone adjacent to the cut , and this can have adverse effects with some materials and applications.

H2. ***metal powder cutting (POC)*** - is a method applicable to metals that do not flame cut very easily. Preheated iron powder is injected into the flame to raise the cutting temperature. Oxidation of the iron provides an aid to cutting metals that are highly resistant to oxidation. Chromium-nickel stainless steels, high-alloy steels, and cast iron are cut with this method. It is also used to remove gates and risers from iron and stainless steel castings, and to cut stacked sheets or plates more easily.

H3. ***chemical flux cutting (FOC)*** - adds flux to the cutting gases to make the metal oxide more fluid and more easily removed from the gap of the cut. Powdered chemicals such as sodium carbonate, and other salts of sodium are used. The process is sometimes called *flux injection.* Its use is relatively minor.

H4. ***arc cutting*** - involves a group of processes that use the heat of an arc to melt a metal workpiece to severe it or remove metal. All common arc welding processes (See chapter 7.) can be adapted to metal cutting as well as metal fusion. When arc processes are used to cut steel and other easily oxidized metals, oxygen may be used in conjunction with the arc to support the oxidation. In metals that do not oxidize, the cutting action is mainly from pure melting and air or a shielding gas is used to provide the force needed to help expel the molten metal from the gap. The most significant processes in this group are plasma arc cutting, air carbon arc cutting, and oxygen arc cutting (oxygen lance cutting). Gas metal arc cutting, gas tungsten arc cutting, shielded metal arc cutting, and carbon arc cutting, are other arc cutting processes that are not widely used in industrial production situations.

H4a. ***plasma-arc cutting (PAC)*** - uses the extremely high temperature (20,000 to 50,000°F (11,000 to 28,000°C) of the plasma arc to melt the workpiece metal. Severing is a result of melting rather than oxidation. A direct current arc between a tungsten electrode and the torch body creates the required high temperature, and partially ionizes a stream of nitrogen, hydrogen, argon, air or a mixture thereof. (Partially ionized gases are a mixture of positively-charged ions, free electrons, and neutral atoms.) As the stream of gas leaves the nozzle, the separated electrons recombine with the gas atoms and release additional energy. The constricting effect of the nozzle further increases the arc temperature, and quickly heats and melts the workpiece metal. A shielding gas is often used to protect the ionized stream, and sometimes a surrounding stream of water is also used to help confine the stream so that the melting takes place in only a narrow kerf. The force of the stream, the shielding gas, and water, all expel the melted metal from the cut.

The process provides very high cutting speeds, 4 to 5 times higher than those achievable with standard oxy-fuel cutting. It works equally well with metals that do not oxidize because melting rather than oxidation is the means by which the metal is removed. There is a heat-affected zone but it is narrower than that resulting from oxy-fuel-gas cutting. Stainless steel and aluminum are major applications of the process, although mild and alloy steel, titanium, bronze, copper, and magnesium are also processed. Smooth cuts in plates up to about 6 in (150 mm) thick are feasible[2]. Ductwork, over-the-road tanks of aluminum or stainless steel, food and chemical processing equipment, ships and barges, are all manufactured with the use of this process. Fig. 3H4a illustrates plasma cutting.

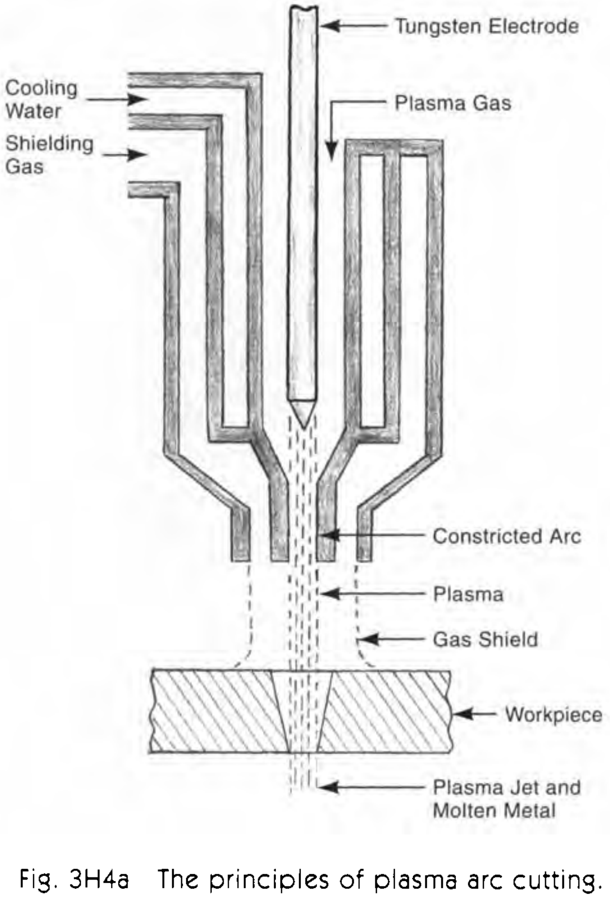

Fig. 3H4a The principles of plasma arc cutting.

H4b. ***air-carbon arc cutting and grooving*** - In this process, intense heat from an electric arc between the tip of a carbon electrode and the metal workpiece melts workpiece material. A high-velocity air stream passing through the arc blows the molten metal away from the area of the cut. Though it can be used for through-cutting, the method is commonly used for gouging, an application not feasible with oxy-fuel gas cutting. When used for gouging, it leaves a clean groove. One common application is the preparation of square-edged plate for welding. Another is to remove defective welds so that the joint can be reworked. The process is also used to remove sprues, runners, risers, and fins from castings. Cast iron, steel, stainless steel, ductile and malleable iron, nickel, aluminum, copper alloys, and other non-ferrous metals have been processed with this method. Equipment is simple, but the operation is noisy and the scattering of molten metal may be a problem.

H4c. ***oxygen lance cutting (LOC)*** also known as ***oxygen arc cutting*** - is used in steel mills to sever material that is already hot from the steelmaking process. A small pipe (lance) carries oxygen to the workpiece, which is hot enough to start the oxidizing reaction without the need for further heating by fuel. The heat generated by the oxidation, combined with the oxygen flow from the pipe, are sufficient to continue the oxidizing reaction and oxide removal until cutting is complete. The lance is usually a simple length of pipe or tubing with a diameter of 1/8 to 1/4 inch (3 to 6 mm) coated with non-conductive mineral material and connected to a valve and oxygen supply hose. The lance is consumed as the operation proceeds. When cool workpieces are to be cut, the surface of the metal is heated with a separate torch to a temperature high enough to start the oxidation reaction with the oxygen lance. The operation can be performed under water.

In some process variations, aluminum or magnesium wire in the lance develops additional heat of oxidation enabling the lance to cut concrete, bricks, and other non-metal objects.

H4d. ***gas metal arc cutting*** - is the metal cutting version of GMAW, gas metal arc welding. In both processes, the heat is provided by an electric arc between the workpiece and a continuously-fed metal wire, shrouded by the flow of an inert shielding gas. In the case of metal arc cutting , the purpose of the operation is to sever parts of the workpiece rather than to fuse it to another part. The molten metal is evacuated from the area of the cut by a combination of the force of the shielding gas, the arc, and vapor pressure from materials vaporized by the arc. This method is not highly significant in industrial production situations.

H4e. ***gas tungsten arc cutting*** - is the cutting variation of GTAW, gas tungsten arc welding. For cutting, higher amperages and increased shielding gas flow are employed. The arc melts workpiece metal, which is forced out of the cut by gas pressure from the shielding gas and the effects of the arc. Gas tungsten-arc cutting is used for cutting stainless steels and various non-ferrous metals including aluminum, copper, nickel, magnesium, silicon-bronze, and copper nickel. An argon-hydrogen gas mixture is commonly used. As with gas metal cutting, this method is not widely used in production situations.

H4f. ***shielded metal arc cutting*** - is similar to "stick" welding when that method is used to cut the workpiece rather than to fuse it to another member. A metal electrode in rod form, coated with flux, is used without any gas jet or blanket. The heat of the arc of high current density melts the workpiece, and gravity is used to carry away the molten metal. This method is limited to situations where it is inconvenient to use more effective flame cutting methods.

H4g. ***carbon arc cutting*** - is not a significant industrial process but is found in small shops that lack more-sophisticated equipment. The arc between a carbon-graphite electrode and the workpiece melts the workpiece where the arc contacts it. Gravity and pressure of the arc, rather than the air jet used with air-carbon-arc cutting, removes the molten metal.

H5. ***laser cutting*** - is an alternative process for cutting plate and sheet materials. See O below.

I. Electrical Machining Processes

I1. ***electrical discharge machining or EDM*** - is sometimes called, *spark erosion machining*. It uses a series of fine, electrical discharges or sparks to erode the workpiece material. The discharges pass from the tool (cathode) to the workpiece (anode) at a rate greater than 20,000 times per second. The workpiece material, which must be electrically conductive, melts or vaporizes at the point where it is touched by the spark. A dielectric fluid, usually kerosene, circulates between the electrode and the work. The fluid confines the spark, cools and solidifies molten material, and carries away the residue. The process is advantageous for hard, conductive material including hardened steel and carbide. There is no significant cutting force, so delicate shapes can be produced.

The gap between the anode and the work is only about 0.002 in (0.05 mm) and is servo controlled. There is an overcut equivalent to the length of the spark from the electrode to the work. The cutting rate is slow compared with conventional machining but is still advantageous for materials too hard or otherwise not easily machined. The rate of cutting and surface finish are controllable by varying the frequency, voltage, and current in the electrical pulses. Higher energy levels in the pulses produce faster erosion of the workpiece but a rougher surface finish. Typically, the rate of cutting is reduced toward the end of the operation, in order to provide smoother surfaces. Spark erosion produces small craters in the workpiece and these craters are manifested as a matte finish on the workpiece. The tool also is eroded since some spark action is in the reverse direction. Additionally, some secondary operations may be required to remove a hard, thin, re-cast surface layer, or fine surface cracks caused by thermal stresses, depending on the material used and the function of the part produced.

I1a. ***ram EDM*** - is sometimes called "die-sinker" EDM, and the principle is illustrated in Fig. 3I1a. The electrode is shaped to fit the desired

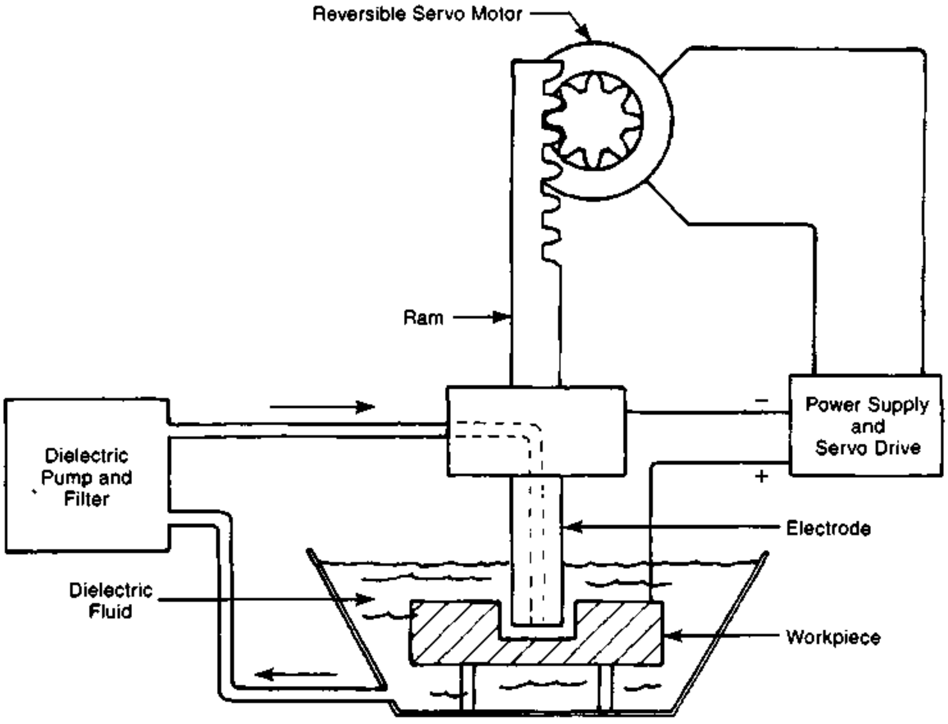

Fig. 3I1a Ram EDM. A series of fine, rapidly repeating electrical sparks from the electrode to the workpiece erode a cavity in the workpiece. The cavity matches the shape of the electrode. *(Courtesy American Machinist, Penton Media, Inc.)*

cavity and is fed into the workpiece, which is eroded to match the electrode shape. The electrode is made undersize to allow for the expected overcut, commonly 0.0005 to 0.020 in (0.013 to 0.5 mm). Feed is downward into the work, but CNC controls can also provide transverse movement of the electrode to produce special shapes in the cavity. Since the tool also erodes and becomes tapered, extra tools are often made. Graphite is a common electrode material, but copper, brass, aluminum, copper-tungsten, zinc-tin, and other alloys are also used. The process is mainly used to machine cavities in hardened steel dies and molds. It is also used in machining carbide, and in salvaging hardened parts or tools such as broken taps. Slots, nonround holes, small deep holes, and the machining of honeycomb and other fragile parts, are additional applications.

I1b. ***wire EDM*** - uses a constantly-moving wire instead of a shaped electrode. The wire, of 0.001 to 0.013 in (0.025 to 0.33 mm) diameter, passes through the work, with a vertical axis, (though it may be set at an angle when required when cutting apertures for stamping tools.) Tungsten, copper, and brass are common wire materials. The wire or the work, is fed horizontally as the cut progresses, to cut a slit or shaped through-hole in the workpiece. Different wire material is constantly exposed to the spark, so wear of the wire is widely distributed and is not a problem. The process, shown in Fig. 3I1b, is often used to cut die openings in hardened stock to produce dies and die components. A high level of accuracy and fine detail can be achieved.

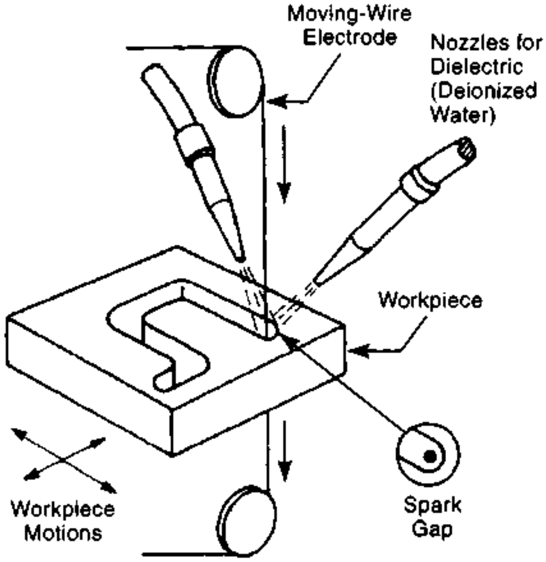

Fig. 3I1b Wire EDM. Electrical sparks from the wire to the workpiece cut a contoured slit in the workpiece as the wire advances. *(Courtesy American Machinist, Penton Media, Inc.)*

I1c ***electrical discharge grinding (EDG)*** - is similar to electrical discharge machining (See I1), except that the electrode is a rotating wheel instead of an electrode that is stationary except for its downfeed. The workpiece and wheel are immersed in dielectric fluid, and metal is removed by the same kind of spark erosion as that which occurs with EDM. The wiping action of the wheel produces better surface finishes than with ram-type EDM. The graphite wheel is dressed as necessary to compensate for its wear in the process. The volume of material lost by the wheel from wear averages about 1/3 of that removed from the workpiece but is considerably less in many instances. Since the wheel wear is spread over its circumference, the amount of reduction of wheel diameter from dressing is normally small. The process is used in shaping carbide form tools and in grinding fragile or brittle materials. Material to be ground by EDG must be electrically conductive. There is a thin heat-affected layer from the process. The layer varies from 0.0001 to 0.0015 in (0.0025 to 0.038 mm) in depth. Fig. 3I1c illustrates the process.

I2. ***electrochemical machining (ECM)*** - removes metal by a reverse electroplating process. The workpiece becomes the anode and the tool is the cathode of the electrolytic process. A highly conductive electrolytic fluid is pumped into the space between the workpiece and the tool, and high-amperage current removes workpiece material by anodic dissolution. The workpiece takes a mirror-image shape of the tool. The gap between the electrode (tool) and workpiece is a small as 0.001 in (0.025 mm) and pressure of the electrolyte must be high to insure adequate flow. Temperature control

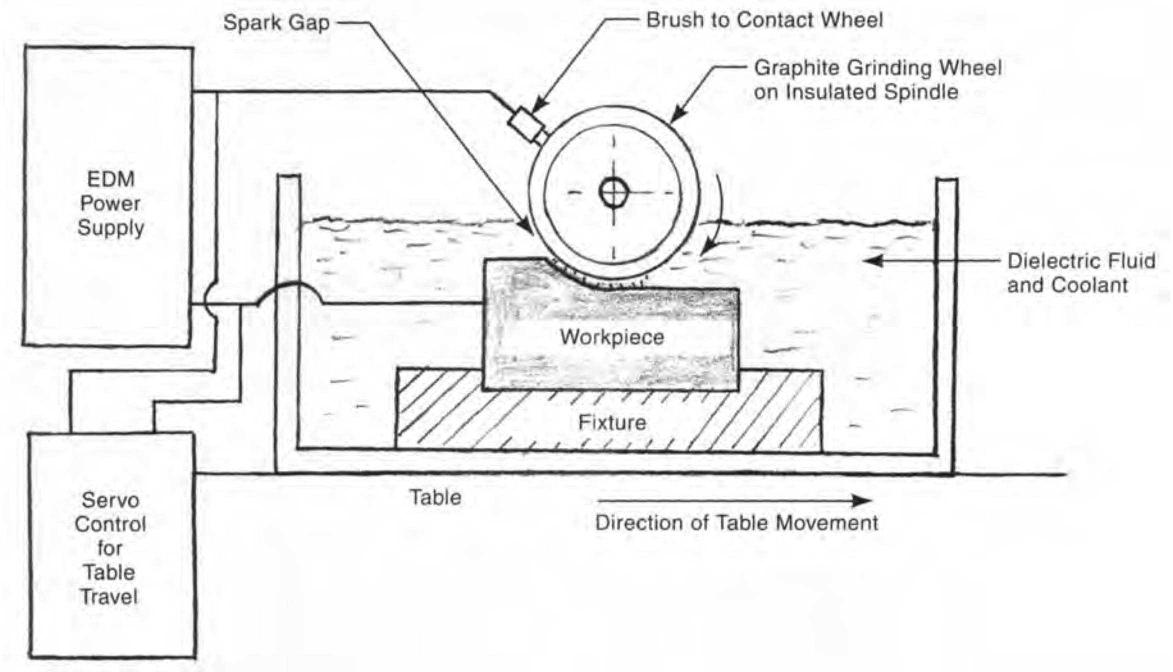

Fig. 3I1c Electrical discharge grinding (EDG) - is EDM with a rotating wheel electrode. Electric sparks from the electrode erode the workpiece. The shape of the periphery of the wheel is transferred to the ground surface of the workpiece.

of the electrolyte, control of the gap and feed rate of the tool and maintenance of electrolyte cleanliness are important elements in the process. The electrolyte is circulated through equipment that removes the operational debris from the fluid. The process is particularly suited to hard materials and others that are difficult to machine by conventional methods. Workpiece hardness does not affect its machinability by the process, but the workpiece material must be electrically conductive. The tool does not wear and no stresses are induced in the workpiece by the operation. Common tool materials are copper, brass, bronze, stainless steel, and copper-tungsten. Metal removal rates are good compared to a number of other non-traditional machining processes, and average 1 in^3 (16 cm^3) per minute per 10,000 amperes of current. The process is used for die sinking, manufacture of jet engine parts, cam profiling, and the machining of small, deep holes. ECM is most advantageous for materials that are difficult to machine by conventional methods. A typical electrochemical machining set up is illustrated in Fig. 3I2.

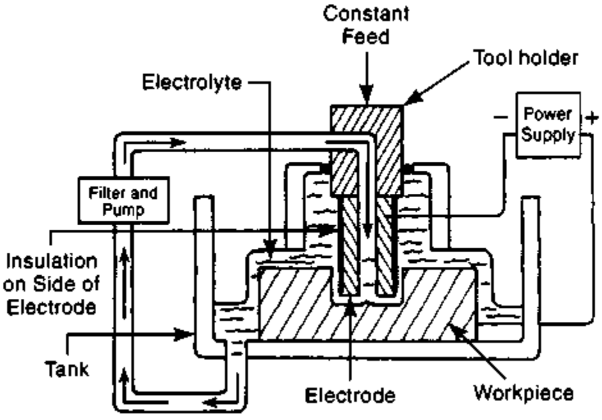

Fig. 3I2 Electrochemical machining (ECM). Heavy electrical current passing through the electrolyte between the electrode and the workpiece causes anodic dissolution of the workpiece material. *(from Bralla, Design for Manufacturability Handbook, 1998, McGraw-Hill Companies. Reproduced with permission.)*

I2a. ***electrochemical grinding (ECG)*** - is similar to electrochemical machining but replaces the relatively stationary tool with a rotating conductive grinding wheel. The wheel normally consists of aluminum oxide abrasive bonded to a metal wheel, which acts as the cathode of the electrolytic circuit. Electrolytic fluid circulates in the area where the abrasive contacts the work. A combination of electrolytic and mechanical action removes material from the workpiece but the electrolytic action predominates, accounting for about 90 percent of metal removal. Anodic dissolution of the workpiece metal leaves surface metal oxides. In conventional ECM, the flushing action of the electrolyte removes these oxides. In electrochemical grinding, the abrasive mainly functions to remove the oxide film, exposing a new metal surface to the electrolyte. The abrasive also separates the metal wheel from the work, preserving a fine (0.001 in or 0.025 mm) gap between the two. It also carries the electrolyte solution to the gap.

The process has the advantage of relatively high metal removal rates for hard metals, freedom from heat damage to the workpiece, and the ability to grind fragile parts. Plunge, surface, cylindrical, and internal grinding are all feasible with the process. However, capital costs are high and the electrolyte can be corrosive to the equipment and workpiece. The process is commonly used in sharpening carbide cutting tools, avoiding the high wear rates of expensive diamond-abrasive wheels that would otherwise be required. It is also used for grinding surgical needles, honeycomb structures, and other fragile parts. ECG is illustrated by Fig. 3I2a.

I2b. ***electrochemical turning (ECT)*** - is another application of electrochemical machining. The workpiece rotates as in conventional turning but the cutting tool is replaced by an electrode. Electrolytic fluid is directed to the gap between the tool and the work, and material is removed by electrolytic action between the workpiece (anode) and the electrode (cathode). Facing and turning cuts can be made. Disc forgings and bearing races are machined by the process.

I3. ***electrochemical discharge grinding (ECDG)*** - is sometimes called, electrochemical discharge machining. It is a combination of electrochemical grinding (ECG) (See I2a) and electrical discharge grinding (EDG) (See I1c). Stock removal is primarily by ECG but oxides from ECG are then removed by intermittent spark discharges instead of

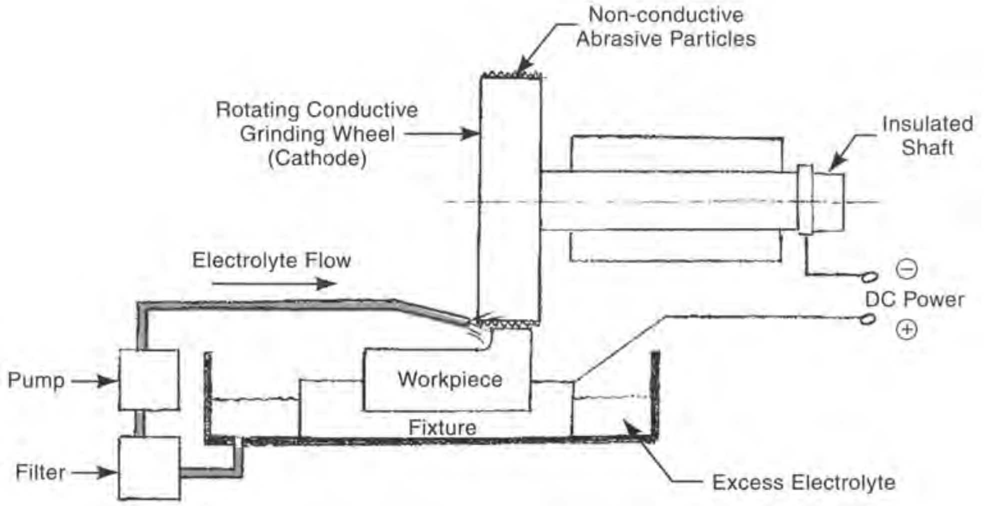

Fig. 3I2a Electrochemical grinding. Most of the metal removal results from electrolytic dissolution of the workpiece caused by flow of electrical current in the electrolyte between the conductive grinding wheel and the workpiece. Abrasive grains on the wheel remove surface oxides and expose more metal to the electrolyte.

by abrasive particles. The wheel is conductive (normally made of graphite) and has no added abrasive. The fluid used is a highly-conductive electrolyte in contrast with EDG, which uses a dielectric fluid. The wheel rotates rapidly (4000 to 6000 ft/min - 1200 to 1800 m/min), bringing fresh electrolyte between the workpiece (the anode) and the wheel (the cathode). Spark discharges occur randomly when the breakdown voltage of the oxide film is exceeded. Alternating current or pulsating direct current are used. Current densities are less than in ECG (to avoid cratering of the workpiece and wheel), and metal-removal rates are considerably slower. However, the wheel cost for the graphite-only wheels is less than that required for abrasive wheels used with ECG. The process is used in the grinding of carbide cutters. It can also be used with hardened tool steels, nickel alloys, and parts that are heat-sensitive or fragile. Honeycomb and other fragile parts are advantageous because they are finished free from burrs and stresses. Form grinding can be used if the wheel has a profile.

I4. ***electrochemical honing (ECH)*** - is electrolytic action added to conventional honing (J1), and is quite similar to electrochemical grinding. Material is removed from the workpiece by a combination of electrolytic action and mechanical abrasion. The electrolytic action removes most of the material, and the abrasive action of the honing stones removes the oxides produced by the electrolytic action. The equipment provides both reciprocating and rotational movement of the honing stones, as in conventional honing. However, electrolytic fluid handling is added. The tool that holds the honing stones is hollow and fluid passes from the tool into the gap between the stones and the workpiece. The gap between the tool and the work is approximately 0.003 to 0.005 in (0.08 to 0.13 mm) at the start of the operation, increasing to about 0.020 in (0.5 mm) at the conclusion, but the stones remain in contact with the workpiece, normally the surface of a machined hole. (The wedging action of a conical piece in the tool forces the stones outward as the honing takes place.) The operation provides metal removal three to five times as fast as regular honing, while the wear of the honing stones is considerably less. Deburring action is also superior and the work is more apt to be free from stress-induced or heat damage. However, the operation requires more complex equipment due to the need for control of the electrolytic action and the corrosiveness of the electrolyte. Therefore it is not necessarily more economical than conventional honing. The process is used to refine the bores of hardened parts such as gears and pump components, particularly when production quantities are large.

I5. ***electro etching*** - is a method for marking workpieces that are electrically conductive. A stencil is placed on the workpiece and a pad containing an electrolyte is placed or dabbed on the stencil. The workpiece and the pad are connected to sources of direct electrical current. The current removes workpiece material electrolytically in the areas corresponding to openings in the stencil. The method is useful for placing identification markings on metal parts with fairly smooth surfaces. Electro etching is normally performed manually and is a suitable method when production quantities are modest.

J. Finish Machining Operations

J1. ***honing*** - is a low-velocity abrasive machining process. One or more bonded abrasive stones or "sticks" are put in area contact with the surface to be machined (in contrast with grinding processes where the abrasive and the work are in contact essentially on a line). Slow movement of the sticks in several directions abrades the high spots on the workpiece surface and makes the surface smoother and more true (i.e., with greater dimensional and geometric accuracy). Because of the slow movement, there are no heat effects to the metal surface. The process, illustrated in Fig. 3J1, removes only a small amount of material - less than 0.005 in (0.13 mm)[2] - but improves the dimensional accuracy and surface finish of the surface being honed. The operation can be performed by hand but, for production situations, machines that impart reciprocating motion in several directions, or a combined reciprocating and rotary motion, are used. Cutting fluids are normally employed. The most common application is the finish machining of bored holes to remove tool marks, waviness or taper. The stones are allowed to "float" and follow

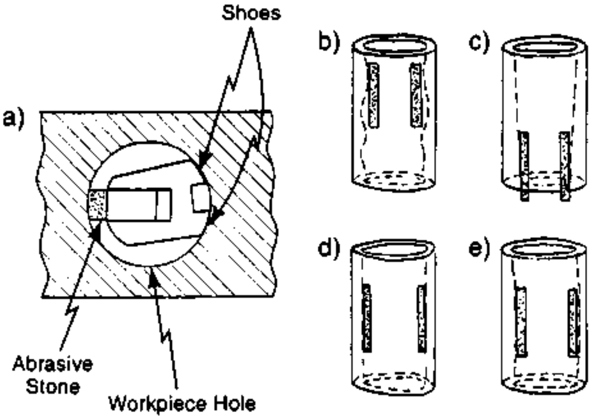

Fig. 3J1 Honing. a) end section view of typical single-stone abrasive honing tool in a hole. Views b) through e) show, greatly exaggerated, hole discrepancies that are improved by honing: b) waviness, c) taper, d) out-of-roundness, e) bowed shape.

the direction of the hole's axis. The cylinder walls of internal combustion engines are typically finished by honing. Gear teeth and bearing races are also honed.

J2. ***lapping*** - is another low-velocity abrasive machining process. It utilizes a fine abrasive in paste or powder form, which is contained between the workpiece and the lapping tool. The lapping tool is made of material softer than the workpiece and is shaped to mate with the surface being machined. It has the function of holding the abrasive. A random, reciprocating motion of the lap and the abrasive, with light pressure applied, refines the dimensions and smoothness of the workpiece surface to a close tolerance. Unlike honing, the motion is not necessarily in more than one direction. Very little material is removed, seldom as much as 0.001 in (0.025 mm)^2. The purpose is to remove fine scratch marks or to create very flat or otherwise smooth and precise surfaces. The process is also used to provide a very close fit between mating surfaces. Flat, cylindrical, or spherical surfaces, or those of special shape can be processed with this method. The operation can be performed by hand or with machines designed for the purpose. In some cases, abrasive coated paper, bonded abrasives, or cloth laps are used. The relative motion between the lap and the workpiece is always slow. Typical applications are finishing of gage blocks, plug gages, ball bearing races, valve seats, roller bearings, and optical parts. Parts requiring metal-to-metal sealing surfaces are frequently lapped. The process is illustrated in Fig. 3J2.

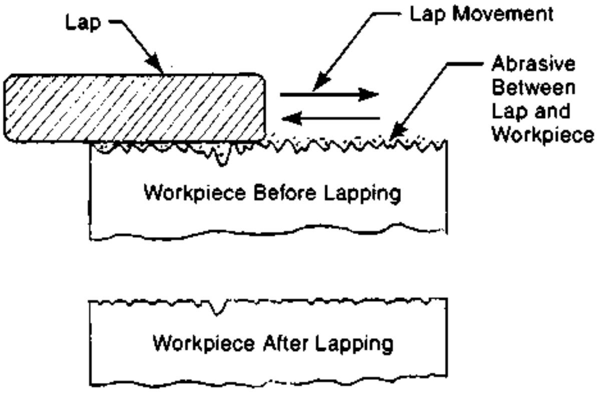

Fig. 3J2 Lapping. The abrasive particles held in place by the soft lap, remove peaks from the workpiece surface. Note: Peaks and valleys in the workpiece are shown greatly exaggerated.

J3. ***superfinishing*** - is a third low-velocity surface-refinement process. A solid abrasive is used, but it is loosely bonded so that it wears to the shape of the workpiece surface. Thus, a large surface area is in contact with the abrasive at all times during the operation. A controlled, bidirectional movement of the workpiece and the abrasive under light pressure removes high spots and smooths the surface, removing surface material that has been smeared or distorted by prior grinding or machining. Typical speeds of movement between the work and the abrasive are 12 to 50 ft (4 to 15 m) per min at a pressure of 10 to 40 lbf/in^2 (70 to 275 kPa). A liberal amount of oil-based cutting fluid normally accompanies the operation. Typically, from 0.0002 to 0.001 in (0.005 to 0.025 mm) of material is removed. Mirror-like surface finishes can be produced. Fig. 3J3 illustrates the process which is used to smooth flat, curved, or spherical bearing surfaces. Automotive crankshafts, camshaft bearings, brake drums, and distributor shafts are typical superfinished parts.

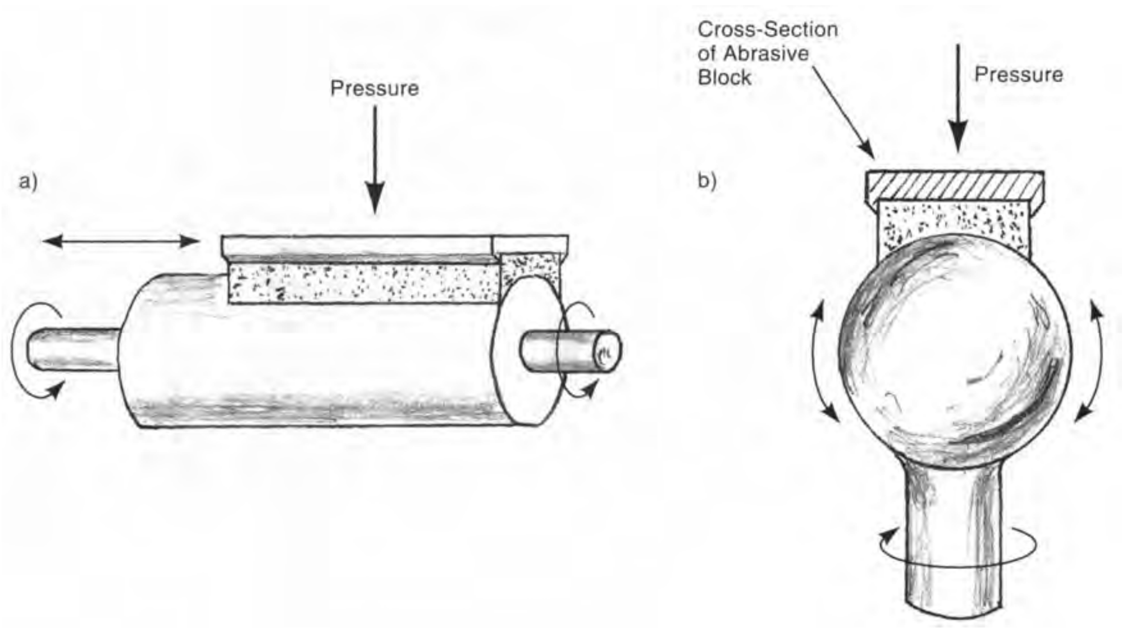

Fig. 3J3 Superfinishing. a) a cylindrical surface. The workpiece revolves while the abrasive block is moved back and forth along the axis. b) a spherical surface. The abrasive block moves around the spherical workpiece as it rotates. In all applications, the abrasive conforms to the shape of the workpiece.

J4. ***burnishing*** - is a means of smoothing machined or other surfaces by rubbing a smooth hard object against the surface with considerable pressure. Burnishing is not a machining operation - no workpiece material is removed - but instead deforms and presses down localized high spots from cutting tools, and thereby smooths rough areas.

J5. ***roller burnishing*** - refines the surface of a workpiece by pressure rolling rather than by removing metal. The burnishing tool incorporates one or more hardened, finely polished rollers, which bear against the workpiece at high pressure. Each roller achieves the desired effect by deforming the surface material of the workpiece as it rolls against it, compressing the minute peaks of surface roughness into the valleys. The force applied to the burnishing tool depends on the amount of pressure required to exceed the yield point of the workpiece material. Multiple rollers may be used, depending on the shape of the surface being roller-burnished. Gear-tooth finishing is one common burnishing operation, performed by rolling the gear workpiece against three smooth, hardened, burnishing gears. Fig. 3J5 shows the principles of the operation and Fig. 3J5a, b, and c illustrates typical configurations that are roller burnished and the burnishing tool that is used. Compressive stresses, left in the surface after the operation, and surface work

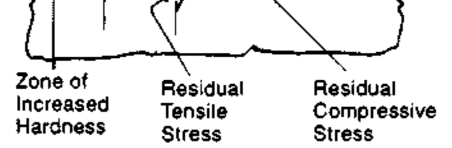

Fig. 3J5 Schematic illustration of the roller burnishing process. *(from Bralla, Design for Manufacturability Handbook, 1998, McGraw-Hill Companies. Reproduced with permission.)*

hardening improve resistance to wear and fatigue failure. The process is limited to workpieces up to about Rockwell 40C in hardness and with walls thick enough to withstand the forces involved. Roller burnishing of holes can be a substitute for, or a supplement to, reaming and boring. Typical parts that undergo the operation are cylinder bores, valve stems, piston rods, turbine shafts, pump plungers, and rolls for the plastics and paper industries.

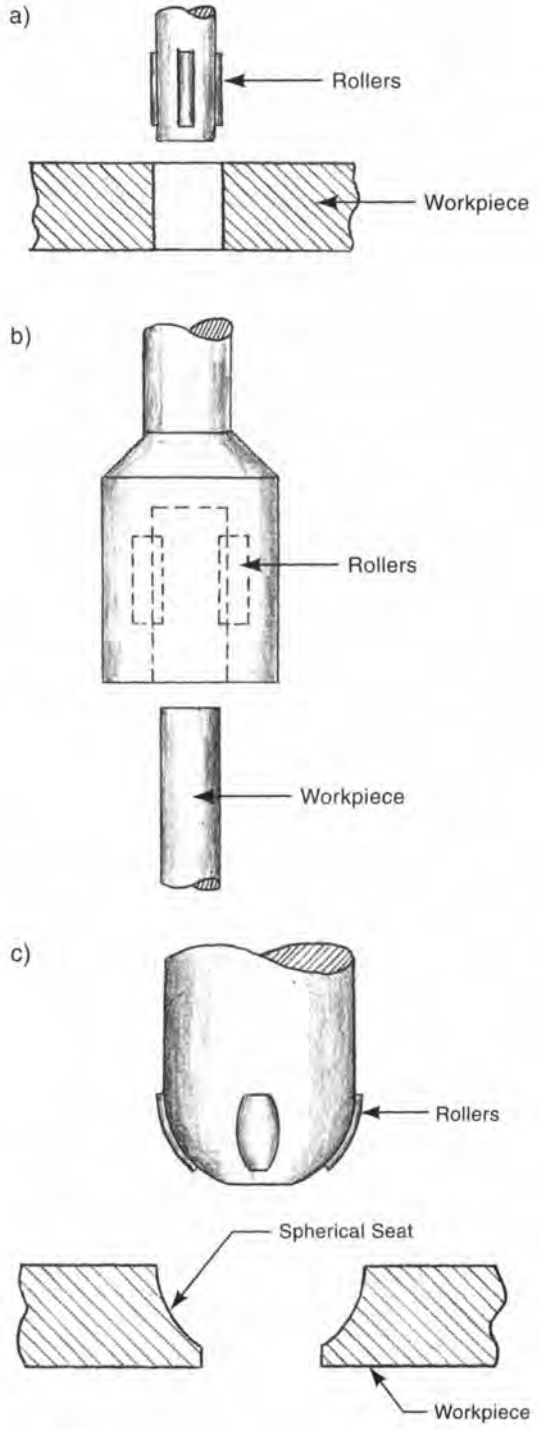

Fig. 3J5a Typical surfaces that can be roller burnished and the burnishing tools used. (*from Bralla, Design for Manufacturability Handbook,* 1998, McGraw-Hill Companies. Reproduced with permission.)

K. Deburring

The thin, sharp, ragged metal edge that forms whenever a metal part is machined or stamped, normally must be removed for reasons of safety, accuracy of dimensions, fit of mating parts, and appearance. Typical burrs are illustrated in Fig. 3K. Burrs form on edges and corners of surfaces, holes, and slots. Similarly, flash, the thin edges of metal (or whatever material is used) that often accompany casting, forging and molding operations, must be removed or controlled. The following is a summary of the many methods that can be employed to remove burrs and flash.

K1. ***abrasive flow deburring*** - is an application of abrasive flow machining. (See C10.) A putty-like material containing abrasive is flowed by hydraulic pressure over the workpiece edges that have burrs. The force of the material helps break off the burrs and the abrasive particles provide cutting action that smooths the edges. The process is

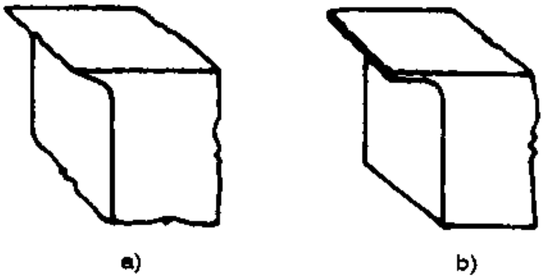

Fig. 3K Typical burrs. View (a) shows the typical shape of the most common burrs. View (b) illustrates a more pronounced burr. (*From Bralla, Design for Manufacturability Handbook, McGraw-Hill, NY.*)

repeated back and forth for a number of cycles until the desired results are achieved. It is particularly applicable to removing burrs in places that are not accessible to more conventional deburring methods. Surfaces can also be refined by this method. Ultrasonic motion from a graphite tool is sometimes used to provide more aggressive abrasive action. An orbiting tool may provide similar benefits. Abrasive flow deburring is illustrated in Fig. 3K1.

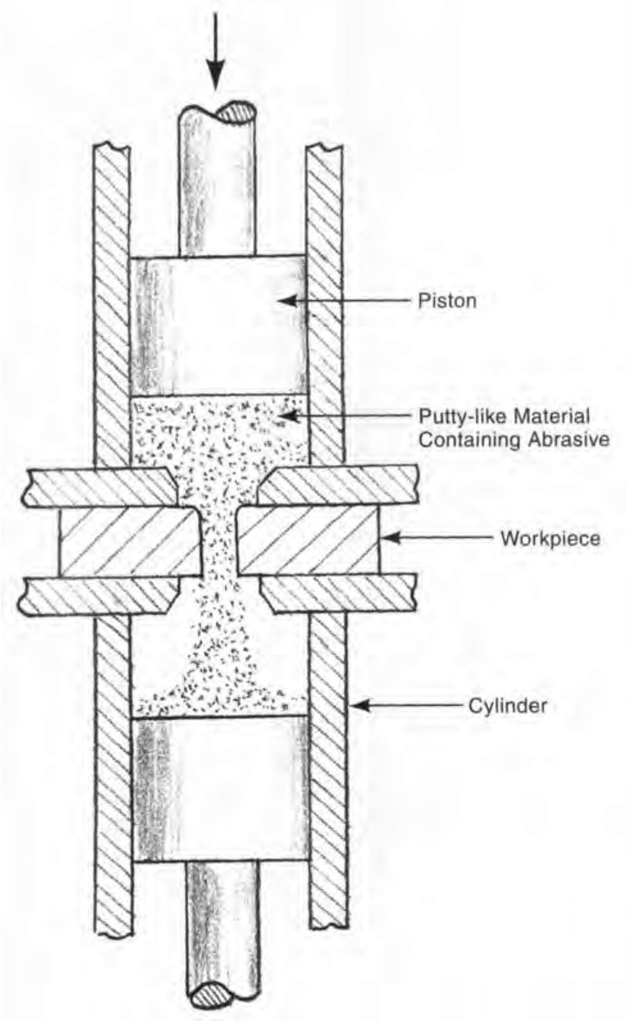

Fig. 3K1 Abrasive flow deburring. Reciprocating movement of the pistons forces the putty-like material containing abrasive particles, back and forth against the workpiece, removing burrs and smoothing the surface.

K2. ***abrasive jet deburring*** - uses a high-velocity stream of abrasive particles or glass beads that are directed against the burrs. The burrs are either broken off, peened over by the force of the abrasive stream, or are worn away. The abrasive particles can be carried by a gas stream, or mechanically thrown against the workpiece. Plastic and rubber workpieces may be cryogenically cooled just prior to the operation. The low temperature makes these materials more brittle and facilitates the fracture of the burrs. (See C9.)

K3. ***barrel tumbling*** - A group of parts to be deburred is placed in a rotating barrel that contains abrasive powder, small, pebble-size stones, and water. As the barrel rotates, the mixture continually slides to the lowest point. During this sliding, the breaking and peening action of the stones, combined with the cutting action of the abrasive, removes the burrs. (Also see 8B2.) This method is economical since workpieces do not have to be handled individually and little operator attention is required during the operation. Fig. 3K3 illustrates the process. Barrels rotating on a horizontal axis are most suitable for deburring. Machined parts,, stampings, small sand-mold castings, die castings, forgings, and powder metal parts are all deburred with this approach. Plastic, glass, and rubber parts

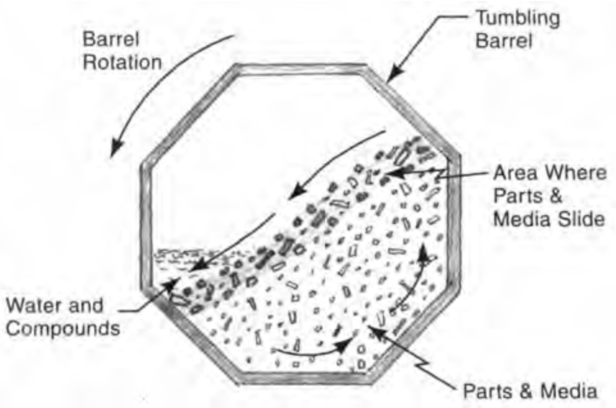

Fig. 3K3 barrel tumbling - As the barrel rotates, about 25 percent of the mixture of parts and media form a layer that slides downward, providing abrasion that breaks off and wears down burrs. The operation is slow but labor costs are low because a number of barrels can run at the same time with almost no operator attention.

can also be processed. After tumbling, the parts and media are separated by screening.

K4. ***chemical deburring*** - uses the same process as that used in chemical machining (See S.). A buffered-acid solution dissolves workpiece material including, and especially, burrs. Large groups of parts can be deburred simultaneously by immersion in the chemical solution, making the method economical. However, since the chemical solution acts on all surfaces of the workpieces immersed in it, critical-dimension surfaces may have to be masked. The process can be used for both ferrous and non-ferrous metals. Stampings and machined parts are commonly processed.

K5. ***electropolish deburring*** - is an application of electropolishing (8B3). Electrolytic action removes stock from all surfaces, especially the burrs, which are more prominent and draw a more dense electric current. Machined parts and stampings, including stamped gears, are deburred by electropolishing. Thin or fragile sections can be processed since there are no forces exerted on the workpiece by the operation. Excellent surface finishes can result from the process. It is limited to electrically-conductive workpiece materials.

K6. ***electrochemical deburring*** - is similar to electropolish deburring except that shaped electrodes are used. As such, the process is a special application of electrochemical machining (See I2.). The electrodes are positioned to concentrate the electrolytic action at the burrs. Surface residue is removed after the operation. The method is particularly suitable for removing burrs from inside surfaces that are not accessible for other methods. As long as an electrode can be positioned near the burr, the electrochemical dissolution will take place.

K7. ***liquid hone deburring*** - uses an abrasive (typically 60 grit) suspended in water. The mixture is then forced over the burred edges of the workpiece. The method is applicable to very fine burrs and very little edge radiusing takes place.

K8. ***manual deburring*** - is hand deburring with any of a variety of tools such as scrapers, knives, files, and emery cloth, to cut burrs from the workpiece. Powered rotary files or burrs, belt sanders, or other powered hand tools may be used. These methods are appropriate for small-quantity production where it does not pay to establish a more automatic approach, for burrs inaccessible to automatic devices, for burrs of variable size, and for fragile parts.

K9. ***thermal energy deburring*** - involves placing the workpiece in a closed container into which a charge of natural gas is introduced. The gas is ignited and the high temperature wavefront thus generated burns off and vaporizes the burrs. The workpiece is not significantly heated but the thin, prominent burrs are subjected to an instant of very high temperature. Surfaces of the workpiece are not dimensionally changed, or otherwise affected by the operation, though the material where the burrs were located may have a heat-affected zone. The method is applicable to ferrous, nonferrous and some plastic workpieces. Plastic moldings can have thin flashing removed by this process. One common application is the deflashing of zinc die-cast carburetor bodies.

K10. ***ultrasonic deburring*** - is used to remove minute burrs such as those developed during honing operations. A mixture of buffered acid and fine abrasive powder in a tank is agitated by ultrasonic vibration. This causes the burr to be both abraded and chemically dissolved. (The process is actually closer to ultrasonic cleaning - described in section 8A2b - than the ultrasonic machining described above, because the vibration is over a wide area in the tank instead of immediately below a particular tool.) A delicate balance must be achieved between three factors: burr size, acid, and abrasive, if the process is to give best results.

K11. ***vibratory deburring*** - shown in Fig. 3K11, is similar to barrel tumbling except that the agitation is produced by mechanical vibration rather than tumbling action, and the vibrations provide a somewhat more aggressive cutting action. (See 8B2.) Large quantities of parts can be processed at one

Next Page

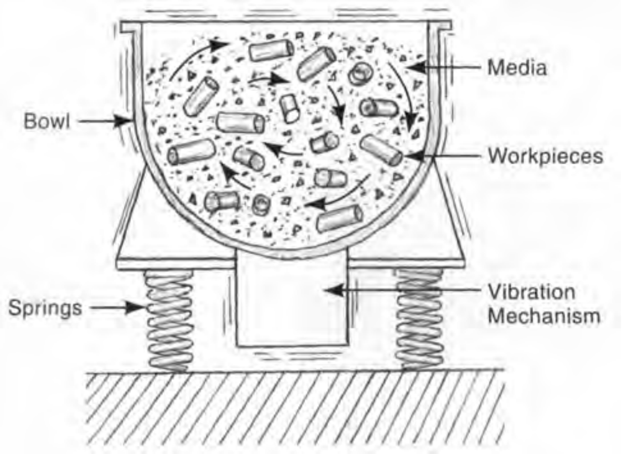

Fig. 3K11 Vibratory deburring. An eccentrically-mounted weight on a rotating shaft provides the vibration.

time. The method is faster than conventional barrel tumbling but not necessarily more economical since both processes proceed automatically once the parts are loaded.

K12. ***water-jet deburring*** - The force of a jet of water of high velocity is used to break burrs from the workpiece. The process can be used for all metals, with higher pressures used for harder metals. For hard steel, deburring pressures in the area of 40,000 psi (275 MPa) are used. (See M, hydrodynamic machining.) The process is also useful for removing loose chips and dirt from machined parts, and some CNC milling machines are equipped with water jets for that purpose.

K13. ***centrifugal barrel tumbling*** - is similar to barrel tumbling except that centrifugal force is used to increase the cutting and breaking forces. In this process, the tumbling barrel is placed at the end of a rotating arm. The rotation provides centrifugal force that may be as much as 25 times the force of gravity, greatly accelerating the deburring action.

K14. ***spindle finishing*** - is a variation of barrel tumbling. Instead of being placed loosely in the barrel along with the media and other parts, the part to be finished is clamped to a spindle and is then immersed in the moving media where it is rotated. Deburring action on the part then be quite rapid, although only one part is normally deburred at a time. By a suitable design of the holding fixture for the workpiece, the abrasive action can be concentrated where it is needed and other areas can be protected. The process can provide improved surface finishes. Although the operation is effective, labor costs may be higher than with other methods unless loading and unloading are automated. The operation is frequently used for finishing cylindrical automotive and appliance parts.

K15. ***powered brush deburring*** - uses the force of a powered, rotating wire brush to break off and remove burrs from the workpiece. Machined gears are often deburred with this method, which, with the proper brushes, can also round sharp corners. Cleaning, descaling, and surface finish improvement can also be accomplished. Splines, tubing, screw threads, and stampings are also deburred by this method. It is also used with nylon-abrasive brushes. These are brushes of nylon filaments that are impregnated with abrasive grits, and are useful for removing small burrs, for radiusing corners, and improving surface finish.

K16. ***abrasive belt sanding*** - is a manually-controlled operation aided with belt sanders or flap wheels. For a manual operation, high output rates are possible. The workpiece is held in such a way that the abrasive action of the belt is directed against the burr to be removed. The process can remove sizable burrs but can also produce a very small burr itself. Flashing from castings, forgings, and cold heading can be removed. Flap wheels provide flexibility needed to reach depressed areas. De-scaling and cleaning are also accomplished with these wheels.

K17. ***laser deburring*** - utilizes laser energy, directed by CNC equipment, to remove burrs. (See O.)

K18. ***plasma glow deburring*** - is a method used on plastics. Heat from a low-temperature argon-oxygen plasma removes flashing and thin burrs.

Previous Page

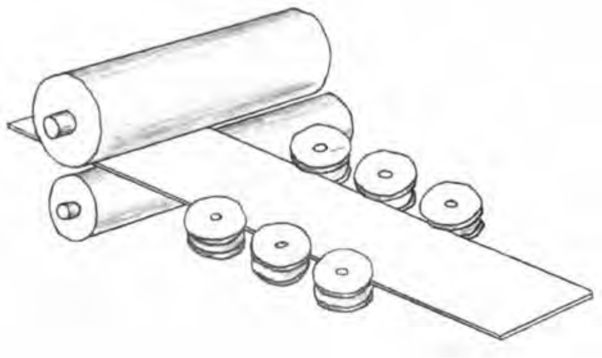

Fig. 3K20 Edge rolling uses pressure rollers at the edges of a strip of sheet metal to force burrs down against the sheet after slitting or shearing operations.

K19. ***skiving*** - is used when sheet metal is slit. A cutting tool is set to scrape off burrs as the strip passes the tool. The operation is thus automatic and does not affect other workpiece surfaces.

K20. ***edge rolling*** - is another method used when sheet metal is slit. Instead of scraping off the burr, it is pressed down against the sheet by the force of metal rollers, which are set to bear against the slit edge. The method is illustrated in Fig. 3K20.

K21. ***burnish deburring*** - is similar to edge rolling except that the slit edge is run against a smooth metal surface instead of a roller. The burr is broken off or pressed down, and the edge is smoothed.

K22. ***edge coining*** - is used with stamped sheet metal parts. Press tooling, designed to fit the part, coins the burred edges, forcing the burr into the base metal.

K23. ***robotic deburring*** - is an automatic, robotic version of manual deburring. The deburring tool, a file, rotating brush, or other tool, is manipulated by a robotic arm that is programmed to maintain the tool in contact with the burr-containing edge. If the tool used is compliant, as a brush, exact location of the tool is not critical and robotic control is relatively easy. Sometimes the robot is programmed to handle the workpiece rather than the deburring tool, picking up and moving the workpiece against a brush, bur, or abrasive tool.

K24. ***CNC machining center deburring*** - Tool-changing machining centers can be programmed and equipped to use a rotating wire brush instead of a rotating cutting tool. The machined moves the brush along the burred edges of the part.

K25. ***cryogenic deflashing*** - Plastic and rubber workpieces can have molding flash removed by tumbling them in either a rotating barrel or vibratory equipment at cryogenic temperatures. {The temperature used depends on the workpiece material but ranges from about −210 to −300°F (−135 to −180°C.)} Liquid nitrogen is introduced to the tumbling chamber to provide the required low temperature. The entire workpiece tends to be chilled to the cryogenic temperature but the thin flash, made brittle at the low temperature, is more vulnerable and it tends to break off from the workpiece. Flash formed at the junction of the mold halves, from gates, and from mold cores or ejector pins, are all removed by this method. Suitable media: steel balls, ceramic cylinders, walnut shells, nails, etc. and, sometimes, only the workpieces themselves, provide the striking force that breaks the flash. In another approach, the workpieces can be cryogenically cooled and placed in an abrasive stream that breaks off and abrades the burrs.

L. Filing

Filing involves the removal of material from a workpiece with a file, a tool that has cutting teeth arranged in succession along a surface. A file is somewhat like a saw that is very wide, wide enough to cut a surface rather than a slit. The cutting teeth of files are typically quite small, providing slow and easily-controlled cutting action. A variety of cutting tooth arrangements are available, the choice of which depends on the use to which the file will be put. Files are usually used to remove only a small amount of material from workpieces. Filing is most often a completely manual operation with the motion and force of the file provided by hand. However, filing machines are available that provide either a reciprocation motion like that of a jig saw, a continuous motion similar to that of a band saw, or a continuous motion provided by a rotating disc-shaped file. With these machines, the workpiece is still manually held and controlled. Filing is performed for many purposes including burr or flash removal, size and shape adjustments, and surface smoothing. A skilled machinist can make accurate parts by filing in conjunction with other machining operations, though such an approach involves high labor costs.

L1. ***burring (rotary filing)*** - Burrs and rotary files are small filing tools of round cross-section that are power-rotated. They are normally utilized with hand control of portable electric, pneumatic, or flexible-shaft-driven tools. They are used for such operations as burr and flash removal, chamfering corners, elongating holes and slots, and making other minor shape changes in workpieces. Fig. 3L1 illustrates several typical burrs and rotary files.

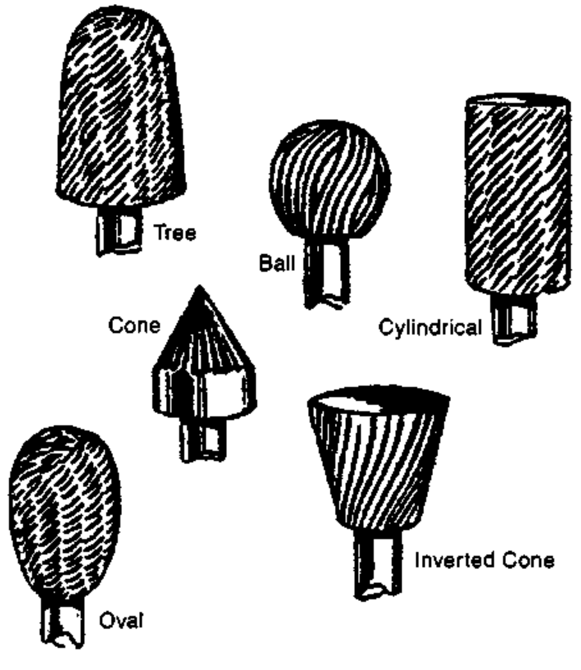

Fig. 3L1 Typical head shapes of burrs and rotary files. (Both rotary files and burrs have cutting teeth. The teeth of rotary files are made by upsetting the tool surface with sharp forming tools; the teeth on burrs are made by grinding.) *(from LeGrand, American Machinists Handbook, 1955, McGraw-Hill Companies. Reproduced with permission.)*

M. Water Jet Machining (Hydrodynamic Machining)

This process uses a narrow, high-velocity jet of liquid as a cutting agent. The jet travels at a speed of up to 3000 ft/s (900 m/s) and is from 0.002 to 0.040 in (0.05 to 1.0 mm) wide. The liquid is primarily water, but polyethylene oxide or other polymers may be added to keep the stream coherent. Cutting occurs where the jet strikes the work material. Although thin soft metals can be cut with the process, it is best adapted to non-metallic materials such as wood, rubber, plastics, fabric, gypsum board, leather, acoustic tile, paperboard, and various food products. The process is mostly used to cut out parts from materials in sheet form or to slit web materials. Cutting disposable diapers is a significant application, as are gasket, shoe sole, and carpet cutting. Water jet is also used for wire stripping, cutting of foods, separating printed circuit boards, paint stripping, and cleaning. Noise from the jet is a disadvantage of the process which is illustrated in Fig. 3M.

M1. ***abrasive water jet machining (AWJ)*** - adds abrasive particles to the water jet to aid the cutting action. The abrasive is added after the stream has left the orifice. This enables the process to be used for cutting of a wide range of ferrous and non-ferrous metals and non-metallics. Because the process is sensitive to variations in process parameters such as the type and amount of abrasive, water pressure and flow rates, tool traverse rate, and material thickness, automatic computer control is vital. Cutting is normally carried out under water, which eliminates objectionable noise that would otherwise accompany the process. Many but not all composite materials can be cut with the process without delamination of the material. The process is also used to blank parts from sheet and plate materials. Materials from 1/16 to 3 in (1.6 to 75 mm) thick are

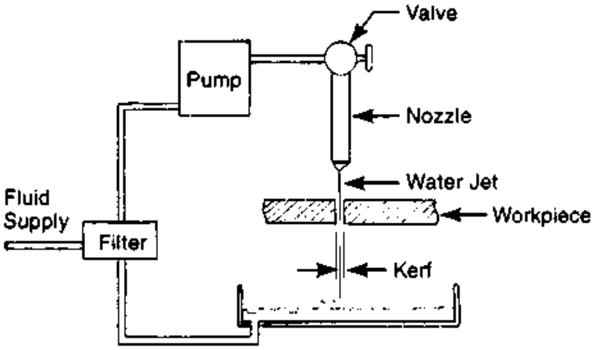

Fig. 3M A schematic illustration of water jet (hydrodynamic) machining.

commonly cut. Removal of sprues, risers, and gates from castings, other trimming of castings, forgings, and other parts and beveling of edges prior to welding are other applications. The process is slower but more accurate than plasma cutting and much faster but not as accurate as wire-EDM cutting. There is no heat affected zone and the cut edge is smooth. Fig. 3M1 illustrates the process. Some plastics that give off toxic fumes when heated, can be cut with this method without ill-effects. Aluminum, which can give problems with laser cutting because of its reflective surface, can also be cut advantageously. Stainless steel, tool steel, Inconel, brass, titanium, glass, ceramics, marble, and carbon fiber reinforced materials are also cut with abrasive water jet.

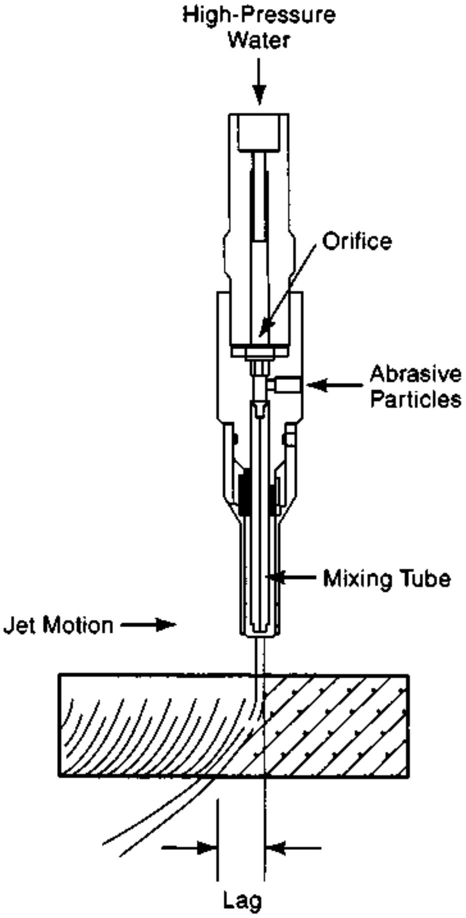

Fig. 3M1 Schematic view of abrasive water jet machining. (*Courtesy Omax Corporation.*)

N. Electron Beam Machining (EBM)

EBM is essentially the same process as the more common electron beam welding, except that the beam is used to cut instead of to fuse. The beam size, power, and dwell time are set to provide a cutting action. Magnetic coils focus and direct the high-energy electron beam. The electrons striking the workpiece melt and vaporize the workpiece material. Any material can be processed. Very narrow slits and small holes can be machined, as narrow as 0.0005 to 0.001 in (0.013 to 0.025 mm). Depth-to-diameter ratios of 100 to 1 are possible. Holes can be drilled in steel up to about 0.3 in (7.5 mm) thick. When holes and slits are machined, a backing material is placed under the workpiece. When the beam penetrates the workpiece, this backing material vaporizes, expelling the molten workpiece material from the hole. The process takes place in a vacuum of 10^{-5} mm/Hg.[2] The machining part of the operation is very rapid but the part must be placed in a sealed chamber and a vacuum must be drawn. The size of the workpiece that can be machined is limited by the size of the chamber. Equipment costs for this process are high and there must be protection against the x-rays that are generated when the electron beam strikes the workpiece. The operation

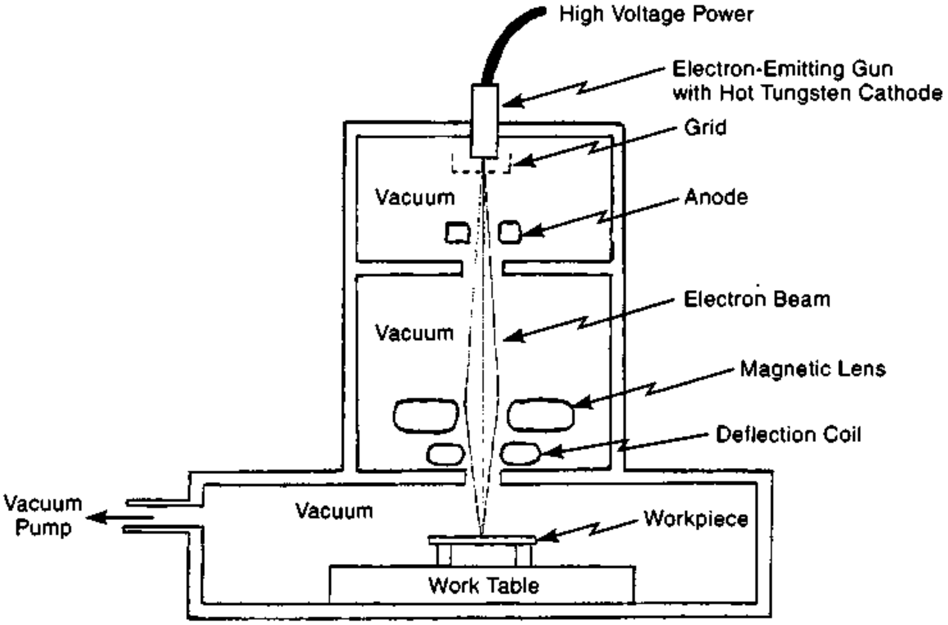

Fig. 3N Schematic illustration of electron beam machining. A high speed stream of electrons, emitted from a cathode, is accelerated and focused. It strikes the workpiece and heats and vaporizes the material at the point of contact. A vacuum chamber is necessary to generate and focus the beam and the workpiece is normally also in a vacuum. The workpiece table is controlled to be movable in two directions.

is normally computer controlled. There is a small heat-affected zone and a thin recast layer at the cut. Machining of semiconductors and sapphire bearings are two commercial applications. Filters and screens are made by drilling multiple holes in sheet material.

O. Laser Beam Machining

The laser beam, used for welding, is also adaptable to machining (cutting) operations. The heat generated by a powerful beam of coherent light, melts and vaporizes workpiece material. The process is best suited for drilling very small [0.005 in (0.13mm)] holes, but is also used increasingly for cutting flat stock. Depth-to-diameter ratios of 10 are feasible in laser-machined holes.[2] The process works best with materials less than 0.2 in (5 mm) thick but can be used with greatly reduced cutting speeds with metals up to about 0.5 in (13 mm) in thickness and non-metals up to about 1 in (25 mm) thick. With thin materials, the process is faster than mechanical cutting. Holes can also be drilled rapidly.

CO_2 or another gas may be blown from the nozzle to assist in removal of melted material from the cut. There is a thin recast layer and zone of heat effect where the cut takes place. The surface of the cut can be irregular, and there tends to be some taper in it. The depth of cut in blind holes and grooves is difficult to control. Typical applications of laser cutting are the machining of carbides and diamond drawing dies. Scribing, engraving, perforating, slitting, trimming and deburring are other operations. Turning, threading and milling of difficult-to-machine materials are feasible. Machining silicon wafers and other electronics components is a common application.

The process has grown as a desirable method for cutting out sheet material components, particularly

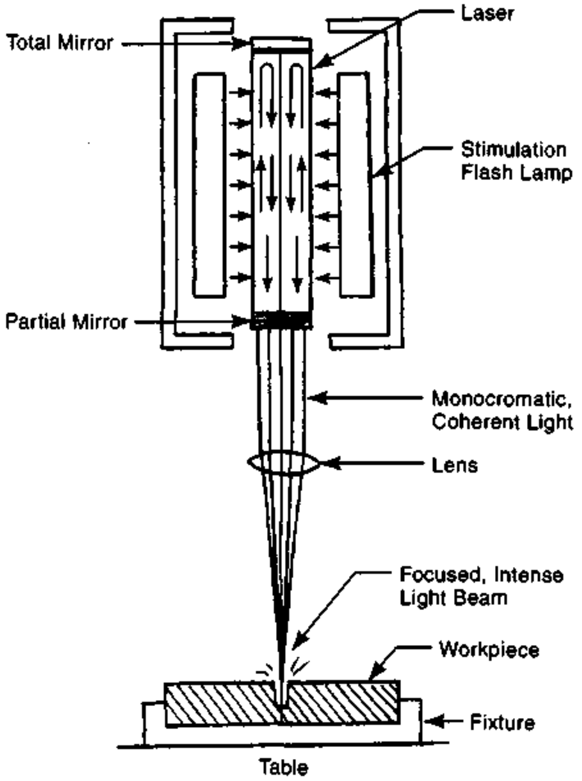

Fig. 3O Laser beam machining. The focused beam of coherent monochromatic light provides intense energy that melts and vaporizes workpiece material in a very small spot. By moving the beam and/or the workpiece, grooving, slitting, engraving, and other machining operations can be performed.

when quantities are too low to justify the expense of blanking dies. Steel, Inconel, Hastalloy, titanium, and stainless steel, and various plastics and other non-metallic materials are cut with the process. The degree of light reflectance of the material affects the type of laser that is best to use. Reflective metals such as copper, aluminum, gold, and silver do not work as well. Fig. 3O illustrates the process.

O1. ***laser-assisted hot machining (LAM)*** - uses laser processing combined with milling or turning to machine materials that may not be easy to machine by normal methods. The laser and cutter work together; laser energy heats the workpiece material locally at the point of cutting, softening the material and facilitating the cutting action. Tool wear is reduced substantially, cutting forces are lessened, and higher speeds can be used. Titanium, cast iron, steel, and silicon carbide ceramic have been cut experimentally with this approach.[7]

P. Shaping

Shaping is no longer a common machining operation, having been largely replaced by milling. Shaping produces flat or contoured surfaces by the reciprocating action of a single-point cutting tool that moves in a straight line. The stroke of the tool is normally horizontal. (Vertical shapers are called *slotters*. See section R below.) (Also see *gear shaping*.) The tool is hinged so that it doesn't affect the workpiece on the return stroke. The only movement of the workpiece is its gradual feed across the path of the cutter between strokes. The reciprocation motion and feed are automatic. If the vertical position of the tool is changed between strokes, slots, contours, gear teeth, or other shaped surfaces can be produced. Shapers are versatile machines, simple to set up, and use inexpensive cutting tools. They are still useful for toolroom and maintenance machining. Fig. 3P illustrates a typical horizontal shaper.

Q. Planing

Planing is similar to shaping except that the workpiece rather than the cutting tool has the reciprocating motion. The workpiece is clamped to a table that moves back and forth in a straight line against a single-point cutting tool. Planing is used for parts that are too large for it to be practical to machine them with a shaper. Machining ways of machine tools is an example. The tool is fed across the path of the work between strokes. Multiple tools can be used at one time and can be fed in different directions to produce several machined surfaces on the part at one time. Some planers have been equipped with milling cutters in place of the single point cutting tools in order to increase their

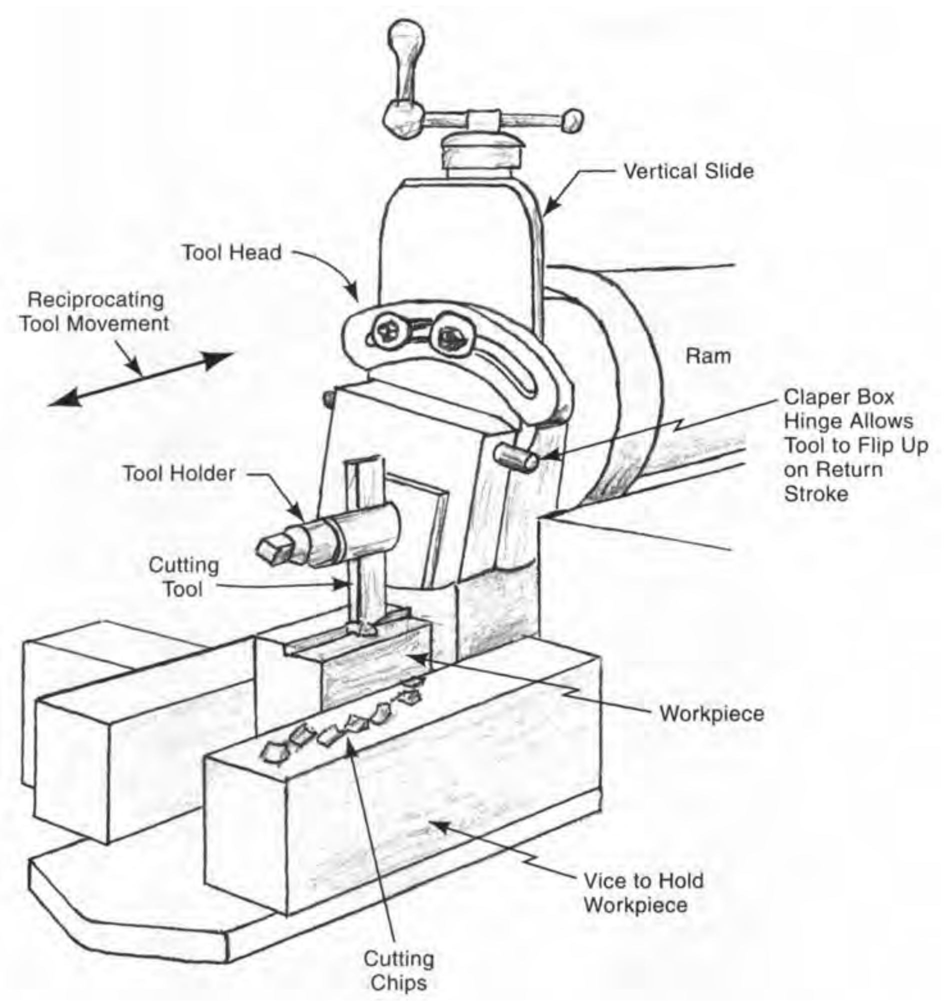

Fig. 3P A shaper makes repeated straight cutting strokes with a single point cutting tool to generate surfaces, slots, and other shapes in a workpiece.

metal removal rates, and are then called plano-milling machines or planer-mills.

R. Slotting

This process is essentially the same as shaping except that the movement of the cutter is most often vertical, and the process is usually used to make a keyway or other slot in the part, rather than a flat or contoured surface. Gear shapers are special machines similar to slotters, used for machining spur and helical gears.

S. Chemical Machining

In all chemical machining processes, metal is removed by the etching action of an alkaline or acid solution that is in contact with exposed surfaces of the workpiece or blank material. There is no external electrical circuit. There are several steps in the process: 1) Metals to be processed are cleaned of oil, dirt, scale, and other contaminants that will interfere with the exposure of the surface to the etching solution. Alkaline cleaning, solvent wiping, and vapor degreasing are the most common cleaning methods. 2) Areas not to be chemically machined may be masked to prevent exposure to the chemical agent. 3) The workpiece is etched (machined) by contact with the chemical solution, usually by immersion. Circulation of the solution or agitation of the workpiece are necessary to ensure uniform metal removal rates. 4) The mask is removed, the workpiece is cleaned of the etching solution, rinsed, and dried.

Aluminum, steel, titanium, and magnesium are the most common materials chemically machined but the process is applicable to almost any metal. Honeycomb structures and other delicate parts can be processed because there are no cutting forces. The process has also been used to salvage oversize parts. It creates no residual stresses in the workpiece. Equipment costs are lower than for conventional machining.

S1. ***chemical milling*** - is the term used to designate chemical machining when the purpose of the operation is to change the shape or some dimensions of the part, or to remove a significant amount of material. Maskants are normally used to control the location of the stock removal. Usually the entire workpiece is covered by the maskant by spraying or dipping. The maskant is then removed from the areas to be machined. Machining takes place when the workpiece is immersed in the chemical solution. Agitation of the solution ensures that it makes equal contact with all surfaces of the workpiece. The depth of cut is controlled by regulating the immersion time in the solution. The process is most suitable for shallow cuts, which can take place over large areas. One common area of application is to machine pockets or cavities in aerospace parts for weight reduction. Other applications are tapering, removal of undesirable surfaces, and overall size reduction of workpieces. Aluminum is the material most commonly chemically milled. Advantages of the process are the fact that it can be applied to hardened or difficult-to-machine metals, and difficult-to-machine shapes, and no burrs or internal stresses are produced. About 0.5 in (13 mm) is about the maximum depth of cut. Weld joints and other non-homogeneous material structures may yield satisfactory results.

S2. ***chemical engraving*** - is the process name used when the purpose of the operation is to make patterned surface depressions in the workpiece so as to produce lettering, other nomenclature, figures, or decorations. The pattern can be either depressed or raised. Masks are applied either as a photoresist or by screen printing. A variety of metals can be processed including stainless steels. Brass, aluminum, and copper are also commonly treated. Chemical engraving of printing plates is one of the earliest applications of chemical machining. The making of nameplates and instrument panels are other applications. Depressed patterns may be filled with contrasting paint for improved readability. The process is more suitable than pantograph machine engraving when fine detail is required.

S3. ***chemical blanking*** - uses chemical machining to create blanks from sheet material. It is most often used to make parts from thin stock using the photochemical method for configuring the maskant. Manual methods of scribing and stripping the maskant from around the desired part, are also feasible for larger, simpler parts, and those requiring less stringent dimensional accuracy. Manual methods can also be used when a photoresist mask may not have adequate chemical resistance to the solution used, especially when quantities are low and the cost of making a blanking die is not economically justifiable. The mask can be applied by screen printing or offset printing. It is normally duplicated on both sides of the sheet in accurate register so that machining can take place from both sides at the same time.

Etching takes place either by immersing the workpiece in the chemical solution or by spraying the solution on the workpiece. Typical components produced by chemical blanking include electric motor laminations, templates, magnetic recording heads, disk springs, and gaskets.

S4. ***photochemical blanking*** - is illustrated step-by-step in Fig. 3S4. This process uses a photosensitive resist, which is a light-sensitive material, as the maskant. in chemical machining. The resist material is applied by dipping, spraying, roller coating, or flow-coating. The material is hardened in the areas wanted by exposing it to light through a photographic negative whose image corresponds to the shape of the part to be produced. This photo negative is prepared in advance of the operation.

The usual procedure is to draw the blanked part, greatly enlarged, photograph it, and create a negative the same size as the part to be produced.

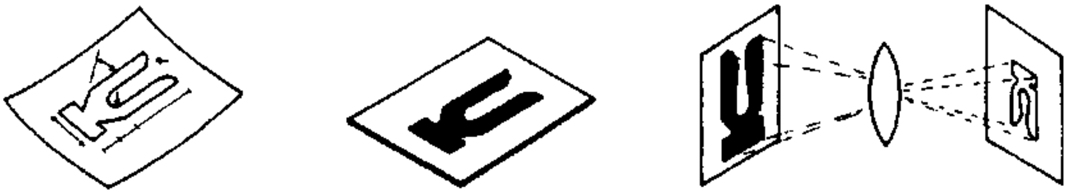

1. Sketch of Desired Part.

2. Prepare Plastic Art Work (1 to 100 times).

3. Photographically Reduce to Actual Size.

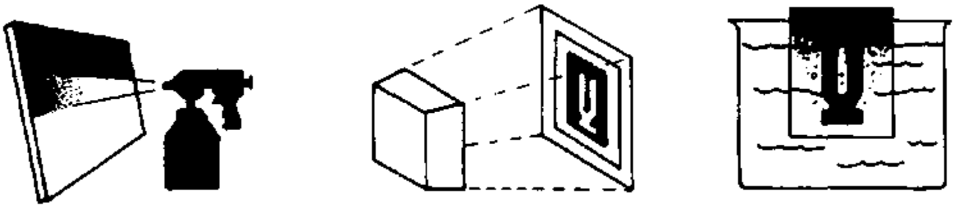

4. Coat Metal Sheet with Photopolymer.

5. Place Transparency on Coated Sheet and Expose Photopolymer to Ultraviolet Light.

6. Develop Exposed Photopolymer.

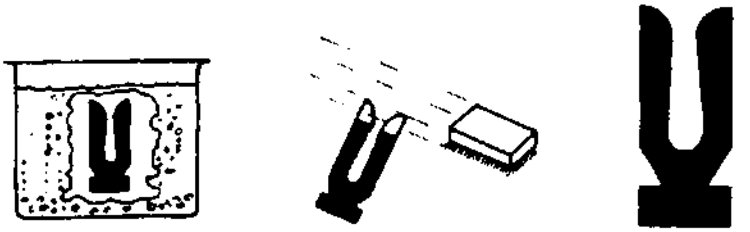

7. Etch Part From Metal Sheet.

8. Remove Polymer.

Finished Part

Fig. 354 Major steps of photochemical blanking. (*Courtesy Mechanical Engineering.*)

The negative is attached to the workpiece after the workpiece has been coated with the masking material and it has dried. Normally, for blanking, a similar negative is attached to the workpiece on the opposite side but in precise registration with the first one. Blue light shone through the negatives hardens (polymerizes) the resist material in the areas exposed to the light. The negatives are removed and the workpiece is processed to remove the unhardened portions of the maskant. The workpiece is then immersed in the chemical reagent, that removes the workpiece material that is not masked. The process is particularly adapted to small, complex, and precise parts, made from very thin materials that are not suitable or feasible for conventional blanking. Photochemically blanked parts are burr free. The electronics industry is an extensive user of photochemical blanking and machining in the production of integrated circuits, circuit boards, and other components. Shadow masks for television sets and screens for various purposes are made with the process.

T. Machining Centers

Machining centers are machines that can perform varied machining operations in sequence, automatically, under computer numerical control and in only one set-up. Milling (including contour milling), drilling, boring, reaming, and tapping are common operations performed by such centers, which are outgrowths of the conventional milling machine. The keys to their operation are twofold; 1) The machines can be programmed for operation by computer numerical control (See below.) to make whatever cuts the workpiece requires with preselected feeds and speeds. 2) They include automatic tool changers that permit the use of a wide variety of cutters, each suited to the operation they perform. The tool changers store whatever tools are needed for the complete series of operations on the part and insert and remove them from the machine spindle as needed. Fig. 3T illustrates a well-equipped horizontal machining center.

Horizontal-spindle machines are most common, but vertical-spindle machines are also available. Machines designed for larger parts may have a traveling spindle column instead of a traveling table. Current state-of-the-art machines have five or more axes and five kinds of controlled movement of either the workpiece or tool position and the feed. The axes controlled may vary with the machine's purpose and design, but can include table movement in and out and side to side, table rotation, spindle head movement up, down, and rotative, and axial movement of the spindle. Fig. 3U illustrates one example of 5-axis control. Tool rotational speed, tool feed, tool dimensional offsets, coolant flow and tool changing can all also be performed under the computer control. For example, table and tool movements can be at the slow speeds needed for feeding the cut, or can involve rapid traverse to new cutting positions; the spindle can stop, start, and change speeds, as appropriate for the operation; and cutting fluid can be turned on and off, as needed. Operations can be performed on different sides of the workpiece in sequence, because the table can move or rotate to present a new surface to the cutters. All these operations are automatic. The machines are engineered to provide precise, close-tolerance positioning of the cutters and workpiece. They are particularly applicable to low- and moderate quantity production that otherwise would require a sizable number of separate machining operations on single-purpose equipment. Since machining centers operate automatically and don't require nearly as much operator skill as is needed to operate traditional single-purpose equipment, labor costs are low. However, programming requires special skills, and the investment required for the equipment is sizable.

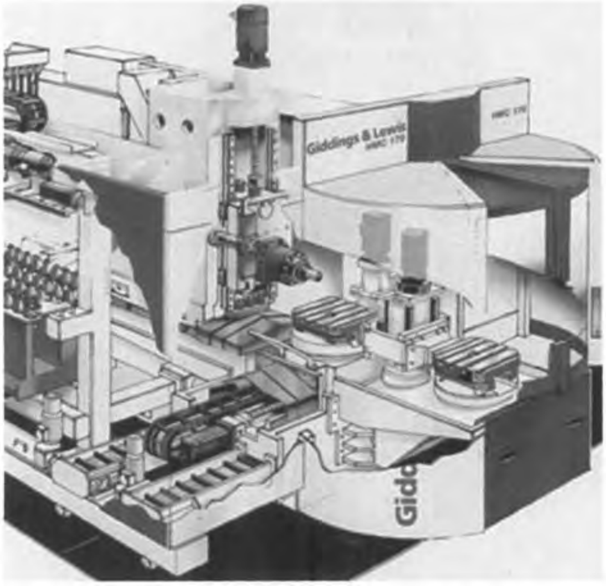

Fig. 3T A horizontal machining center. This CNC machine has a large-capacity tool changer and dual work tables so that one workpiece can be machined while another is unloaded or loaded. (*Courtesy Giddings and Lewis Machine Tools.*)

Some machines are equipped with multiple work-positioning pallets and mechanisms to transfer the pallets to and from the machine table. The pallets and table are designed so that, when assembled, they are in a fixed relationship with one another. Given sufficient memory in the CNC system, as many as 20 or more pallets can be loaded with workpieces, that may or may not be identical. The workpieces are then processed automatically by the machining center, which loads each pallet, machines its workpiece in accordance with the program, and then discharges the pallet and workpiece. The machine then repeats the process, assembling another pallet to the table, machining its workpiece, discharging it, and so on. In this way, machines can be run on a night shift or at weekends, unattended, when power costs are usually lower. Machining centers equipped for this type of operation have sensors included that can detect tool wear, tool breakage, or some other problem that would render the machined part defective. When such a problem is encountered, an alarm may be sounded and the machine stopped automatically.

The types of parts most advantageously processed on machining centers are those that are machined on several surfaces and those with a large number of operations, particularly those made in smaller quantities, where special-purpose equipment is not justifiable economically.

T1. ***turning centers*** - While the typical machining center was based on earlier boring mills or milling machines, the turning center has its roots in the turret lathe. Turning centers differ from turret lathes in having automatic tool changers that can remove and install cutting tools in the machine's turret, in having the tailstock replaced by a live powered spindle and chuck, and in having NC or CNC control. These machines provide the same benefits and have similar applications to those of machining centers but deal primarily with parts that have surfaces of revolution.

T2. ***multiple operation machines*** - are part of a trend to provide more complex CNC machines that can perform the operations of both the turning center and the machining center. By adding additional cutter spindles and feeds, and additional tool changing capacity, both turning and milling as well as drilling, tapping, boring, and other capability, more operations can be performed on a workpiece without moving it to another machine. This capability can provide greater dimensional precision from cut to cut, less possibility of marring the workpiece during handling and storage between operations, and faster throughput times. As this trend continues, the distinction between milling, turning, and other operations on separate machines becomes more blurred. Such developments are made possible by the development of the controls and machine-element positioning devices that are part of CNC machining.

U. Numerical and Computer Control

These controls provide a means for operating machine tools and other equipment automatically. The represent a difference from earlier automation in that the machine elements are controlled by electronic pulses rather than mechanical devices. The pulses activate drive motors and other devices of the machine tool. Setting up a machine for a particular operation involves the entry of coded numerical data rather than the fabrication and installation of cams or other mechanical apparatus. The coded data are in the form of numbers, letters, and special symbols. The complete set of such data for any operation is called the *part program.* Data are stored on various magnetic media: magnetic tape, computer storage disks, etc. Perforated paper or "Mylar"plastic tape, widely used for data storage in earlier numerical control systems, is seldom seen any longer. The part program is stored on a CD-ROM or hard drive. When the program is read by the control unit, it is converted to a series of electrical pulses sent to the machine's motors. These electrical pulses provide the power to move the machine's spindle, tool slides, worktable, and other elements. They control the amount, direction, and speed of each moving machine element, as needed to carry out the operation.

There are three elements to a numerical control system: 1) the part program - a planned sequence of commands acted upon by the machine controller and then by the machine itself. 2) the controller - the numerical control system, computer-numerical control system, or programmable controller that reads the program and directs the machine tool, and 3) the machine tool, equipped with precise electrical power drives (servo motors or stepper motors) for the machine movements to be controlled. This approach provides great flexibility and ease of changeover so that automatic operation is economically feasible, even with one-of-a-kind or other limited production. There are various degrees of sophistication of this approach. They reflect developments as electronic devices and computers have become more powerful and more affordable. The development of numerical control has coincided with and has been an essential factor in the development of machining centers. The advantage of numerical control is that it enables the machine to run automatically in accordance with an optimized program; a machine operator is not needed to manipulate handwheels, levers, or other mechanical devices. If a number of parts are to be produced, all are made with a consistent machine sequence. With NC and CNC, automatic operation is affordable even with limited production quantities.

The simplest arrangement may have only two axes of movement and position to control, the longest table slide (usually the X-axis), and the machine

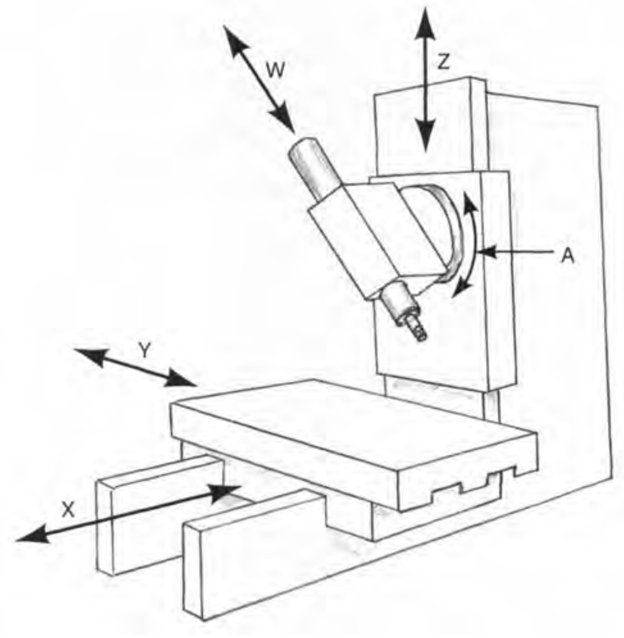

Fig. 3U A representation of the machine motions of a 5-axis milling machine.

table slide at right angles to it (usually the Y-axis). To these can be added the advance, feed and retraction of the machine spindle (the Z-axis) and the arrangement then would constitute three-axis control. In more elaborate systems, up and down movement of the worktable or machine head, rotation of the machine table, and the movement of the spindle mounting may all be added. Fig. 3U illustrates movements on a typical machine with 5-axis control.

Several degrees of sophistication of machine movement can be offered by the control system: *Point-to-point* positioning controls the position of the table but not necessarily its path from one location to another. This facility may be useful for hole-making operations, turret punching, and spot welding. Straight line control adds the control of the tool or table movement from one position to another so that straight milling cuts can be made. With earlier equipment, movement was usually only along the X or Y axis. Straight line motion where more than one axis is involved is typically called, *linear interpolation. Contouring* or *continuous-path* control, also called *circular interpolation*, allows curved surfaces to be machined, controlling both the direction and velocity of motion of machine elements.

Another important aspect is the degree to which information is fed back to the controller or computer during the operation. *Open-loop systems* do not have any feed back. The machine simply follows the instructions specified by the controller. This arrangement may be quite acceptable for simple two- or three-axis situations where tolerances are less stringent. *Closed loop systems* include sensors that transmit information back to the computer about the instantaneous location of the machine elements and the computer then may adjust the position of the machine element in accordance with that information. In more sophisticated installations, sensors may detect whether the tool has broken. They may measure the changing dimensions of the workpiece and adjust the cutting tool position accordingly, and may measure torque or actual cutting speeds. Compensations can be made to adjust for material variations, or dulling or wear of the cutters. This approach is sometimes referred to as *automatic adaptive control (AAC)*. Fig. 3U-1 illustrates both closed-loop and open-loop systems schematically.

U1. ***NC, numerical control*** - is an earlier term for electronic control of machine tools. In the system, tool movements are instigated and controlled from numerical data that has been entered and stored. The numerical data are in the form of numbers, letters, and special symbols. The complete set of such data for any operation is called the *part program*. In the earliest systems, numerical data were stored in the form of holes punched in paper or Mylar plastic tape. The program was read by a tape reader/controller which then fed electrical pulses to the NC machine. Numerical processing power and sophistication were very limited. The term *numerical control* is still widely used to designate control systems that may be more sophisticated than earlier systems, but the more proper term for almost all current systems is *computer-numerical control, CNC*. Fig. 3U1 illustrates a typical traditional NC system.

U2. ***computer numerical control (CNC)*** - introduced in the 1970's, uses a computer in addition to a controller (and, more recently, in place of most of the functions of the machine control unit) as the heart of the system. Earlier NC systems used hard-wired controllers with a fixed logic. CNC,

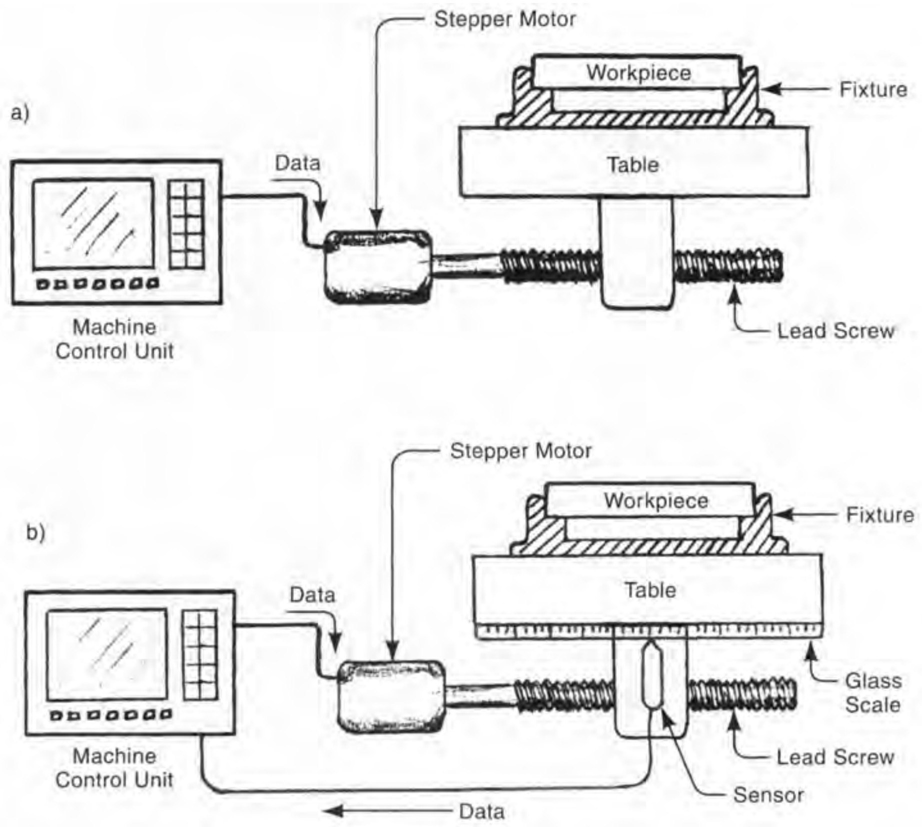

Fig. 3U-1 Open and closed loop control systems. An open-loop system in view a) shows data being transmitted to one of the machine tool's stepper motors causing it to move the machine table a stipulated amount. There is no feed back to verify the table's position. In view b) sensors detect the table's position with respect to a glass scale and this information is fed back to the machine control unit, which may send further signals to the stepper motor to adjust the position of the table. In some closed-loop systems, additional sensors may similarly transmit data of other conditions back to the machine control unit.

with a "soft" wired computer as part of the machine control unit (MCU), provides much greater flexibility and vastly increased functions in the control system. The MCU embodies circuitry that translates computer signals into movements of the machine elements. The computer simplifies the tasks of modifying and storing instructions for particular parts since the computer's data storage system rather than perforated tape can be used for this function. An alphanumeric keyboard provides a means of entering the program manually, and a visual monitor screen displays the program or an illustration of the movement path of the tooling on the workpiece. The addition of a computer to the system also increases the ability of the system to process feed-back information from sensors. This can greatly improve the accuracy and efficiency of the operation. With sophisticated programs involving feed-back and, increasingly, fuzzy logic and artificial intelligence, the computer can optimize the operation, achieving maximum cutting speeds and feeds and responding to problems revealed by sensors on the machine. Almost all CNC systems also provide the more usable contouring/continuous-path machining.

The sequence of steps in programming and operating a CNC machine are shown in Fig. 3U2 and are as follows: 1) The part specification, with any essential manufacturing notes, is prepared. 2) A NC part program for performing one operation (or several combined operations necessary to make the part) on a particular machine tool is prepared from

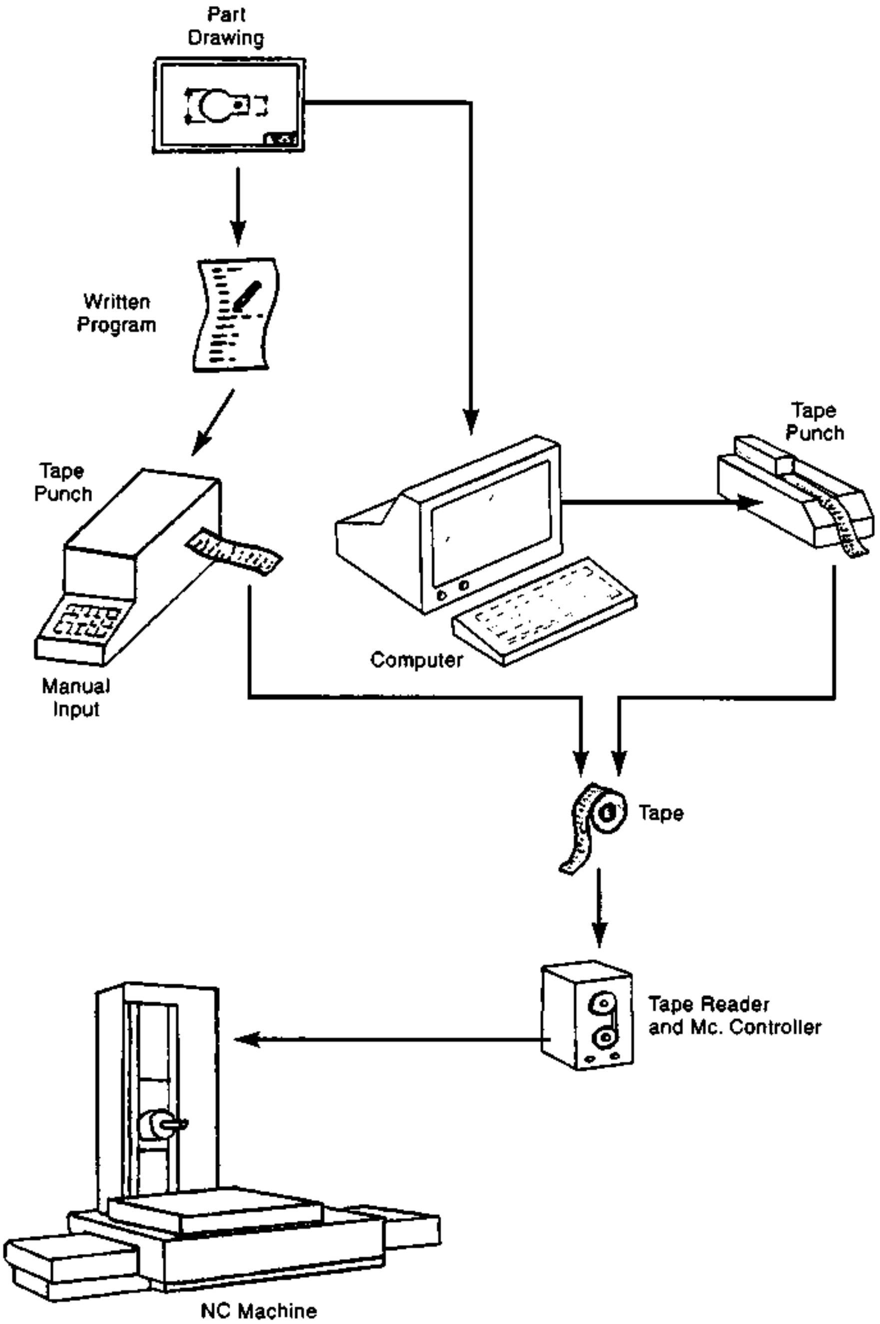

Fig. 3U1 The elements of a typical earlier NC system. The NC machine is controlled by perforated tape, which is punched with either a manual punch or a device connected to a personal computer.

the part specification. This work is typically done on a computer that can send the processing program for the part to the machine control unit (MCU) by one of a number of methods: a) directly by wire, b) in older systems, by means of a tape punching device connected to the computer and then a tape reader connected to the MCU, c) by magnetic tape which is then fed to the MCU, d) by

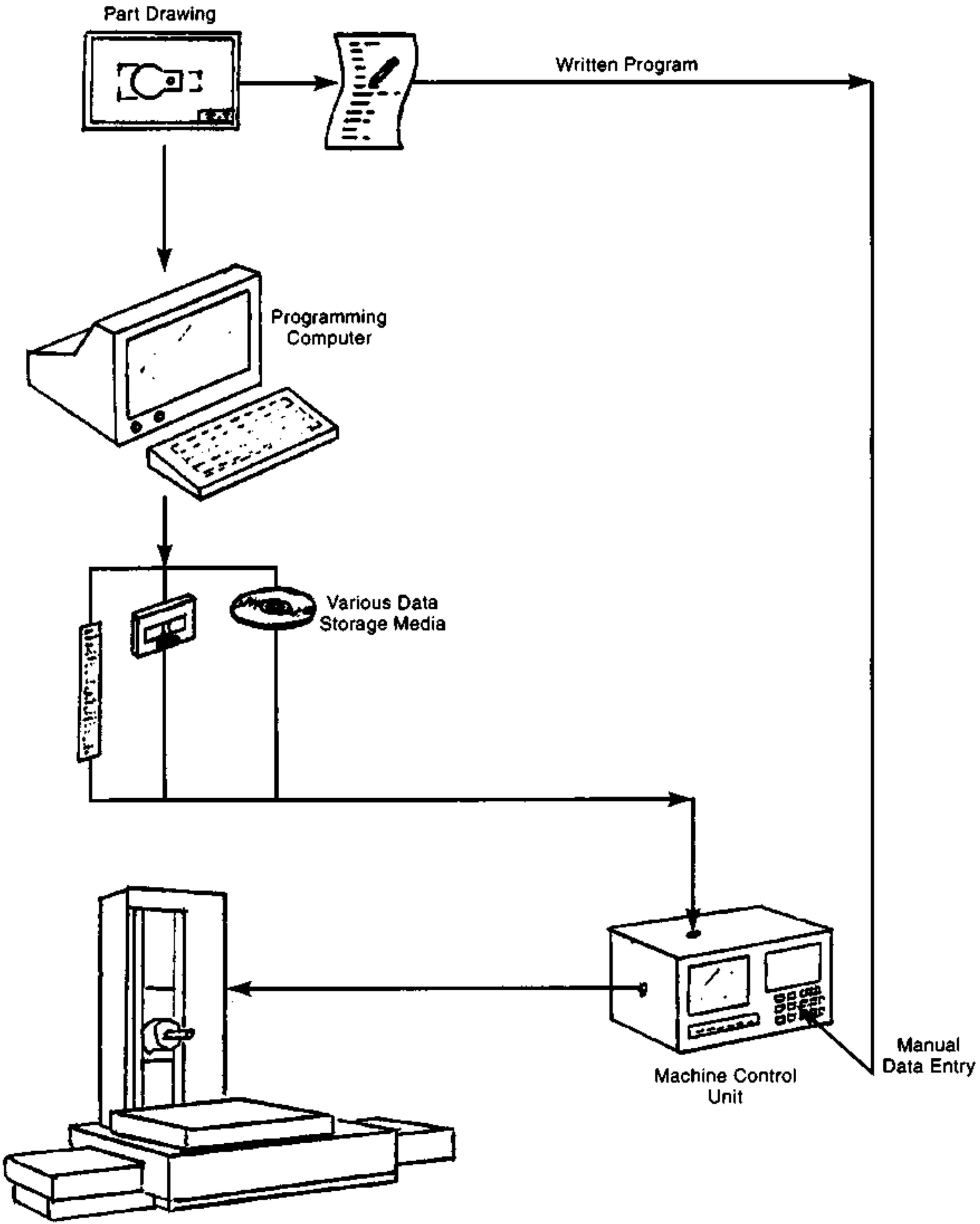

Fig. 3U2 A typical CNC system. The machine control unit (MCU) responds to a program entered on perforated tape, on one of a variety of magnetic storage media, or from a program manually entered directly into the MCU.

a computer disc or disc pack, which is inserted in a reader in the MCU. 3) The MCU reads the program and sends electrical pulses to the NC machine which, following the electrical pulses, performs the operational steps required.

U2a. ***DNC (direct numerical control)*** - is an earlier term for *computer numerical control, CNC.* It was used when the numerical program was fed to the controller directly from a computer rather than from punched tape. Direct numerical control now refers to the situation in which one central computer controls a number of machines at the same time, downloading the NC data as it is needed by each machine. *DNC* now also refers to *distributive numerical control,* a more complex and larger arrangement where one central host computer feeds programs to several satellite DNC computers, which, in turn, feed the programs to CNC units they control. Each of The machine tools each have a microprocessor that processes data from the central computer. The whole program may be downloaded at one time into the memory unit of each machine's controller or may be downloaded piecemeal as needed to keep ahead of the operation. The latter approach is referred to as "drip feed". The programs may reside in the central computer's memory system or may be loaded into the central computer from a floppy disc, punched tape, or other data storage device. Machines connected to a central computer in this way are part of a *local area network (LAN).*

U3. ***programmable controllers*** - This term dates from the advent of numerical control. The earliest programmable controllers were devices that were very simple, by present day standards, and were first used primarily in process equipment such as mixers, providing time and speed control for a number of steps of automatic operation. The term *programmable logic controller* (PLC) was also used. The terms then referred to machine tool controllers that were hard wired for the particular machine functions they would control. They accepted numerical data from punched tape but also had capability for program modification or entry from a keyboard. The term is still used to designate the electronic device at the machine tool that can perform the entire CNC function but which is now more commonly referred to as the *machine control unit (MCU).* As computers have replaced the hard-wired circuits, and computer power has become more economical, these units have been developed to perform more and more functions. Now, in addition to providing the basic program, programmable controllers include capability for closed loop control and adaptive control, utilizing feed-back from various sensors on the machine. Panel displays, machine interlocks, and other auxiliary control functions are incorporated. The basic program can come from the unit's own permanent storage, from a disc reader in the unit, or from a central computer.

U4. ***CAD-CAM - Computer Aided Design - Computer Aided Manufacturing*** - involve the creation of a part's design in digital form and then the translation of that design into a program for CNC operation of a machine tool. In the CAD phase, the designer develops the part's design by computer instead of by making a drawing on paper or film. CAD equipment includes a personal computer or workstation, a design program, and storage media for the completed design. The designer enters coordinates and dimensions with the computer keyboard, mouse, or light pen. The design is pictorially displayed on the computer monitor and can be printed, if desired. In the ideal situation, not yet realized, it would be possible to feed the computerized design automatically to a CAM computer or computer circuits, that would transform it into a control program for a machine tool. The program could then be fed to the machine tool to produce the part just designed. Thus, the task of programming the CNC system to make the part would be performed by the computer, and no human intervention would be required. Differences in machine control systems and between design objectives and manufacturing objectives make the complete achievement of this ideal quite difficult. Existing CAD-CAM systems simplify but do not eliminate the need for human participation in the programming of the machine tool except in some very simple 2-axis applications. In present practice, the production engineer operates a CAM computer, enters design data and specifies the sequence of operations, starting and ending points, intermediate dimensions, and process parameters such as feeds and speeds. The CAM program puts all these data in a form that can be read by the machine control unit. The CAM computer also may display tool movements, and the appearance of the workpiece at various stages of the operation. (A complete CAM system also may provide various administrative control information to monitor such items as work-in-process, cycle time, inventory, machine and labor efficiencies, and schedule compliance, etc.)

U5. ***digital readouts in machining*** - These are electronic devices that display for the machine operator the precise position of the machine table or other machine elements. As such, they are an aid to the manual operation of machine tools, simplifying for the operator the task of moving machine tables and cutters to the correct position for machining or other operations.

U6. ***automatic tracing*** - is used in some machining operations to control the position and movement of a cutting tool so that the operation can be performed automatically. Various devices are used. Tracing attachments for lathes and milling machines typically follow a fabricated template using electrical, pneumatic, or hydraulic systems. Contoured surfaces can thus be machined. These devices improve the productivity and versatility of some machine tools, because tracing often permits the machining of surfaces that would be difficult or impracticable to machine manually. The approach is common in the machining of injection molds and die casting dies. When parts are to be blanked from flat stock by flame cutting, routing, water jet, and abrasive water jet machining, optical tracing is sometimes employed. With this method, the cutter duplicates the path of lines on a drawing of the part's outline.

U7. ***robots and robotic operations*** - See chapter 14 of this handbook.

V. Trimming

Many manufacturing processes for shaping parts leave some unwanted material that must be removed from around the desired shape. Deep drawing, die casting, forging, plastic sheet molding, compression molding, reaction injection molding, and rotational molding are examples of processes that may leave flash or other excess material that must be removed. Various processes are used for such an operation, including the following: die cutting with dies like blanking dies but with suitable clearances for the part to be trimmed, pin routing (vertical milling), laser beam machining, abrasive jet machining, hydrodynamic (water jet) machining, and abrasive water jet machining.

W. High-Speed Machining

High speed machining is most common in milling operations but is also used in drilling and boring. The procedure is characterized by very high spindle speeds which, with normal feed rates per revolution, provide very high feed rates per minute. Surface cutting speeds may also be faster than normal. The method is heavily used in the aircraft industry to machine aluminum structural parts. Aluminum is the predominant material machined by high speed methods, although steel is also processed. One particularly attractive field of application is called *unitization*, the machining of a large, complex single part from a large material plate or block instead of assembling a series of small parts. The method requires careful balancing of tools and tool holders, CNC control of the operation, and more expensive machine tools with less-massive but high-powered spindles. Adaptive control systems are advisable. Spindle speed maximums range from 8000 to 40,000 rpm. Feed rates are as high as 800 ipm.

Another application of this approach is to the machining of dies and molds from tool steels. Small cutters are used, rotating at high rpm's but with normal surface speeds. The higher speeds permit more close passes to be made without time penalty, providing better precision and smoother contours, and greatly reducing the need for hand finishing benchwork, thereby significantly reducing cycle time and finishing costs.

X. Special Purpose Machines

When production quantities are very large, it is often advantageous to design and build machine tools that are dedicated to the production of specific parts. Such machines can provide both labor and quality advantages because the necessary precision can be built in, and the machines can incorporate spindles and tooling to perform several machining operations on the part simultaneously. Handling of the part is greatly reduced. Advantages of specialization can be gained and machines do not need apparatus and structure for a variety of parts. Examples of special purpose machines are those built to drill, bore, ream, or tap a number of holes simultaneously, to drill holes from more than one side, or to mill or broach one surface while performing another operation on another surface. Another method for accomplishing the same objectives is to construct a machine having an indexing table. The table rotates a fixed amount on a timed sequence and its position is accurately located after each movement. Several different machining heads can be located in fixed positions next to the table. The workpieces are positioned in fixtures on the table. After each operation, the table indexes to move each workpiece to the next station, with one station used for loading and unloading. Each time the machine indexes, one part is completed through a series of operations.

Y. Transfer Lines

Transfer lines move the workpieces automatically from one machine to another. In such arrangements, a whole series of machine tools are dedicated to the production of one part, or sometimes a family of similar parts. The workpieces are held on fixtured pallets and the transfer mechanism moves the pallets from machine to machine between operations. Devices on each machine automatically position and clamp the pallet and fixture to the precise location for the necessary operations. The machine tools at each station are automatic and are usually dedicated to specific operations on each part. Automotive engine block manufacturing is typically carried out on transfer machining lines with automatic equipment at each station.

References

1. *Manufacturing Processes and Systems, 9th ed.*, Phillip F. Ostwald, Jairo Munoz, John Wiley and Sons, New York, 1997.
2. *Materials and Processes in Manufacturing, 8th ed.*, E. Paul DeGarmo, J.T. Black, Ronald A. Kohser, Prentice Hall, Upper Saddle River, NJ, 1997.
3. *Metals Handbook, Volume 4, Forming, 8th ed.*, ASM International, Metals Park, OH.
4. *Tool and Manufacturing Engineers Handbook, 4th ed.*, Society of Manufacturing Engineers, Dearborn, MI, 1984.
5. *Design for Manufacturability Handbook, 2nd ed.*, James G. Bralla ed., McGraw-Hill, New York, 1998.
6. *Deburring and Edge Finishing Handbook*, LaRoux K. Gillespie, Society of Manufacturing Engineers, Dearborn, and American Society of Mechanical Engineers, New York, 1999.
7. *Lasers Claim New Roles in Manufacturing*, Thomas Begs, Manufacturing Engineering, October, 1998.
8. *Welding Handbook, 7th ed.*, American Welding Society, 1976.
9. *Introduction to Computer Numerical Control*, James Valentino, Joseph Goldenberg, Regents/Prentice Hall, Englewood Cliffs, NJ, 1993.

Chapter 4 - Processes for Plastics

A. How Plastics Are Made

A1. ***definition - Plastics*** are organic chemical compounds of high molecular weight that have a structure resulting from the repeated linking together of small molecules, called monomers. The resulting long-chain molecules are polymers. Plastics are one type of polymer; elastomers (rubber-like materials) are another. Polymers can be either natural or synthetic. The molecular weight of the polymer is a multiple of the molecular weight of the monomer. Usually, at least 100 monomer molecules and up to many thousands of monomer molecules may be incorporated in one molecule of a polymer or elastomer.

There are two basic types of plastics, *thermoplastics,* which soften and melt when heated (melting takes place over a wide temperature range) and *thermosetting* plastics, whose long molecules are crosslinked together. Thermosetting plastics do not melt upon heating but remain rigid until they reach the charring or burning temperature.

A2. ***polymerization reactions*** - are the chemical reactions in which the individual, relatively small, monomer molecules link together into very long chains, called polymers. The two basic polymerization reactions are *addition polymerization* and *condensation polymerization.*

A2a. ***addition polymerization*** - is a simple combination of molecules without the release of any by-products. In one addition polymerization reaction, a chemical activation of the molecules with the aid of an initiator (a chemical catalyst or other substance), causes the atoms of the monomer molecules to bond together, creating chains of molecules. These chains may have as many as several hundred thousand repeating molecular units and have a molecular weight from tens of thousands to several million. In another process variation, the atoms within the molecules are rearranged. This causes the molecules to link. In still a third addition polymerization method, monomer molecules are composed of rings of atoms. A suitable catalyst causes the rings to open up and connect with the rings of other similar molecules. The reaction is exothermic; heat generated must be removed from the reactor. Polyethylene, polystyrene, polypropylene, and polytetrafluorethylene ("Teflon") are made by addition polymerization. Fig. 4A2a shows the addition polymerization reaction for polyethylene.

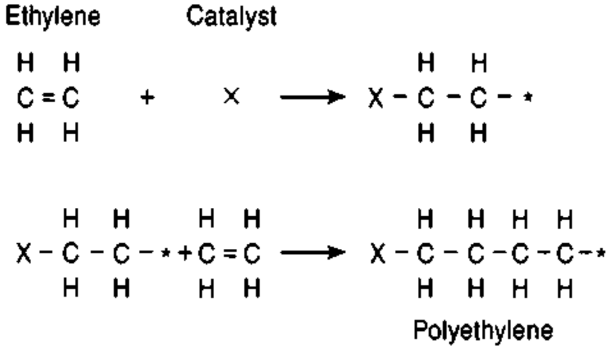

Fig. 4A2a The addition polymerization reaction for polyethylene.

A2b. ***condensation polymerization*** - differs from addition polymerization in that the monomer molecules are modified to cause the linking process to take place. A polymer is formed by a reaction between two functional groups attached to a monomer core. The modification also creates atoms, which form small molecules of condensation, most commonly of water, which is removed from the mixture. The repeating unit of the condensation polymer is different from the monomer because of the elimination of the condensation molecules. The condensation compound must be removed immediately. Otherwise it would interfere with further polymerization and could constitute undesirable contamination of the finished polymer. The condensation reaction requires the addition of heat. Some nylons, phenolics, and polyester pre-polymers, are made by condensation polymerization. Fig. 4A2b illustrates the condensation polymerization reaction involved in the production of phenolic plastics.

A3. ***polymerization methods*** - There are a number of approaches for effecting the polymerization: bulk, solution, suspension, emulsion, and gas-phase methods.

A3a. ***bulk polymerization*** - is a widely used approach. It takes place with the monomers and reactants in the reaction vessel but with no other materials present except initiators. The monomer is a solvent of the polymerized material. As polymerization proceeds, the polymerized plastic dissolves in the monomer, increasing the viscosity of the mixture. Polymerization continues until all the monomer has been polymerized. Exothermic heat must be removed to keep the reaction under control and prevent it from becoming explosive or developing local hot spots. These may result in degradation and discoloration of the polymer. Heat removal is critical because the reaction is accelerated at higher temperatures. The mixture must also be agitated, even though this can become difficult as the viscosity rises. One method of preventing overheating is to carry out the polymerization reaction in two steps, with special arrangements in the second step to aid in the dissipation of heat. The special arrangements include using thin layers of reacting material, finishing the polymerization in small-diameter tubing or in a free fall in open space or along the walls of the container. In another method, the final step is deferred until the monomer-polymer mixture is cast in molds into rods, bars, tubes, or other useful components. Cast acrylic shapes are made with this method.

In another procedure, the polymer is not soluble in the monomer but separates from it as polymerization proceeds. Nevertheless, plastics of very high molecular weight are produced with this procedure.

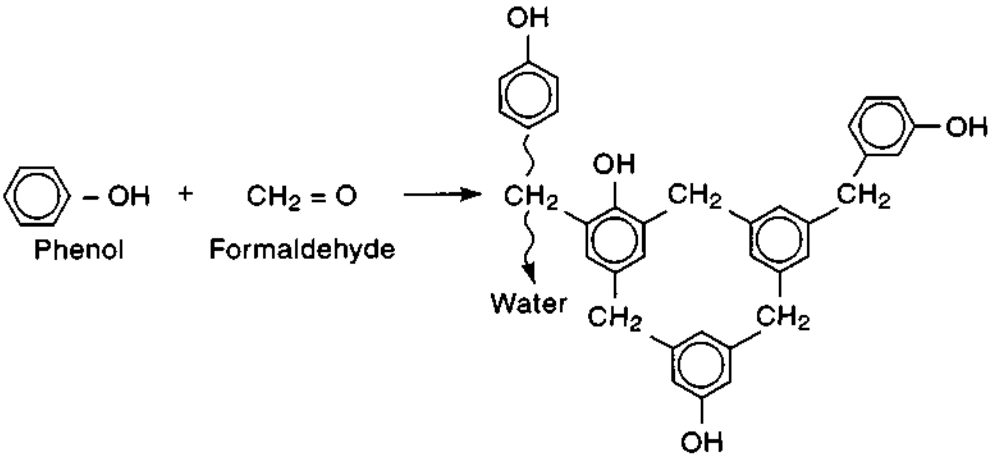

Fig. 4A2b The condensation polymerization reaction, which combines phenol and formaldehyde to produce polymers of phenolic thermosetting plastic.

Bulk polymerization is used in the production of most step-growth polymers and many chain-growth polymers.

A3b. ***solution polymerization*** - In this procedure, used when the monomer is not a solvent for the polymerized material, a separate inert solvent is used. This solvent may dissolve the monomer and the polymer as well as the initiator. However, it may dissolve the monomer without dissolving the polymer or may dissolve the polymer only partially, depending on the materials involved. The technique used varies with the solubility of the solvent as does the rate of polymerization and the molecular weight of the finished product. The solvent has the function of absorbing and conducting away exothermic heat and making the mixture easier to stir. It also reduces the rate of polymerization. These effects all virtually eliminate the problem of heat removal that is inherent in bulk polymerization. A solvent is chosen that does not react with other compounds in the reactor, although complete inertness to the reaction is not always possible.

Solvent removal after polymerization may be difficult. For this reason, the solution method is well adapted to the production of polymers that are used in liquid form as adhesives, coatings, impregnating fluids, and laminating resins. The method is also useful when the monomers are gaseous.

A3c. ***suspension polymerization*** - In this approach, the initiator is dissolved in the monomer and the monomer is dispersed in a liquid in which it is insoluble, usually water. The polymerized material is also insoluble in this liquid. A dispersing agent is incorporated in the mixture to stabilize this suspension of the monomer and polymer. The polymerized material and the monomer from which it is formed remain dispersed in the non-solvent liquid as small beads or "pearls" of 0.004 to 0.040 in (0.1 to 1.0 mm) diameter. The polymerization proceeds in each individual bead in a manner similar to that of bulk polymerization. However, the water or other liquid is valuable in conducting away the exothermic heat of the reaction and in other respects aiding in the control of the process. Other advantages are the lower cost of water compared to organic solvents and the fact that it does not react with other compounds in the reactor. Another benefit of suspension polymerization is that the finished plastic exits the process in smaller-size chunks, eliminating the need for later pelletization. The small chunks are easily washed, filtered, and dried for later molding.

A3d. ***emulsion polymerization*** - has similarities to suspension polymerization. It uses water, soap (an emulsifier) and a water-soluble free-radical initiator to carry out addition polymerization of the monomer. The monomer, which is insoluble or only slightly soluble in water, is dispersed in an aqueous continuous phase. The reaction tends to take place within small hollow spheres formed by the soap molecules. The monomer diffuses into these spheres. The reaction starts when the initiator reacts with the monomer in the small spheres. The control of the conditions that form the spheres also controls the polymerization reaction. A colloidal dispersion of the polymer, a latex, results. The polymerization is much faster than with other procedures including bulk and solution methods and the polymers produced can have very high molecular weights. The process is widely used. Polystyrene, acrylics, polyvinyl chloride (PVC), polyvinyl acetate, and ABS plastics are made with this method. Synthetic rubbers are also made by emulsion polymerization.

A3e. ***gas-phase polymerization*** - is a process in which a gaseous monomer such as ethylene, vinyl chloride or tetrafluoroethylene is polymerized. The gas-phase monomer is introduced under pressure into a reactor along with a catalyst. A reaction takes place that results in the formation of a solid polymer in granular form. Polymer particles can be removed from the reactor and it is not necessary to separate the catalyst. For polyethylene, the reaction takes place at low temperatures [170 to 212°F (75 to 100°C)] and a low pressure of 290 psi (20 bar). Some processes use a fluidized bed of the polymerized material and the solid powder catalyst; others use a stirred bed. Linear low-density polyethylene, high-density polyethylene, and polypropylene are commonly polymerized by a gas-phase process.

A4. ***compounding plastics*** - The typical plastic molding material contains a number of ingredients in addition to a plastic resin. Depending on the application and the resin involved, the molding compound may contain any of the following: fillers, reinforcements, colorants, stabilizers, antioxidants, ultraviolet light absorbers, antistatic agents, flame retardants, blowing agents, lubricants, fragrances, mold release agents, smoke suppressants, antifogging agents, antimicrobials, and plasticizers. Properly blending these ingredients involves a thorough mixing operation. The objective is that any unit of volume of the material has the same distribution of components as that of any other sample and of the entire lot. Mixing methods currently in use are described in the following paragraphs.

A4a. ***mixing by tumbling*** - Tumbling barrels are effective for mixing dry, solid materials. The barrel is rotated about a central axis and the material it contains falls from the top to the bottom, gradually dispersing additives in the base material. Intake of ingredients and discharge of the mixture after tumbling take place through an opening in the barrel. Several different shapes of barrel are used. The V-shaped barrel, shown in Fig. 4A4a, is common. When the "V" is upright, the materials in each side fall together; when the "V" is inverted, the materials fall into each side approximately equally. The repeated combining and dividing in half as the barrel rotates, gradually disperses each material until a uniform mixture is obtained. Granules, crystalline materials, and dry and partly-dry powders can be processed.

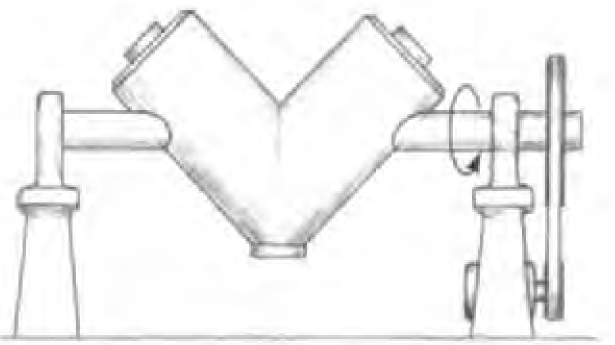

Fig. 4A4a Mixing by tumbling in a V-shaped barrel.

A4b. ***intensive dry mixing*** - involves a container such as that in Fig. 4A4b, with a high speed

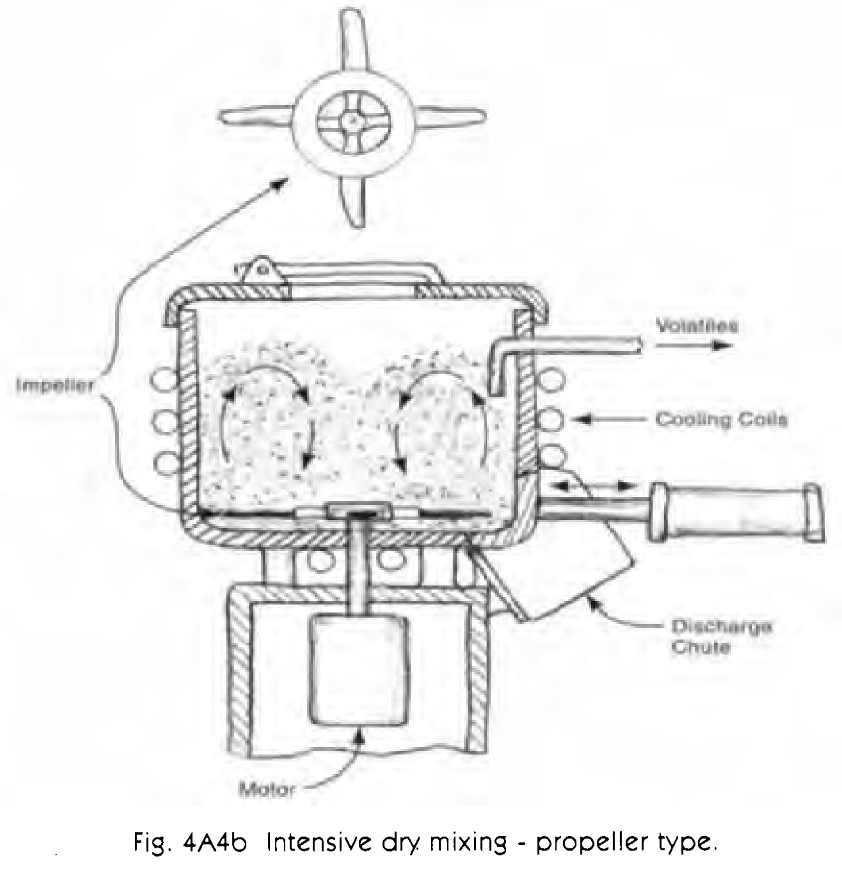

Fig. 4A4b Intensive dry mixing - propeller type.

rotating propeller-like blade at the bottom. It is used for blending powdered resins with various additives. PVC, blended with plasticizer and other additives, is a common application. This type of mixer is equipped with cooling apparatus to remove frictional heat. Volatilized moisture is also drawn off to a vortex and vented.

A4c. ***internal intensive batch mixing*** - utilizes mixers of the Banbury type, illustrated in Fig. 4A4c. They normally consist of two horizontal cylindrical chambers, side by side, each with a shaft centered on the cylindrical axis. Each shaft holds rotors of various shapes. The rotor blades move near but do not touch the cylindrical walls of the chambers, producing a strong shearing action. The blades rotate in opposite directions and interact with each other. Some blades are also helical and impart an axial movement to the material being mixed. There are other blade varieties, elliptical or fishtail in shape. The effect of all these shapes is to severely fold, shear, and mix the material in the mixer. The rotors and chambers contain channels for cooling or heating liquids so that the proper mixing temperature for the particular polymer involved can be maintained. High power levels may be required but mixing of the batch normally can be completed in 2 to 4 minutes and a highly homogenous mixture results. This equipment is used in the mixing of polyolefins, vinyls, ABS, polystyrene, ureas, and melamines.

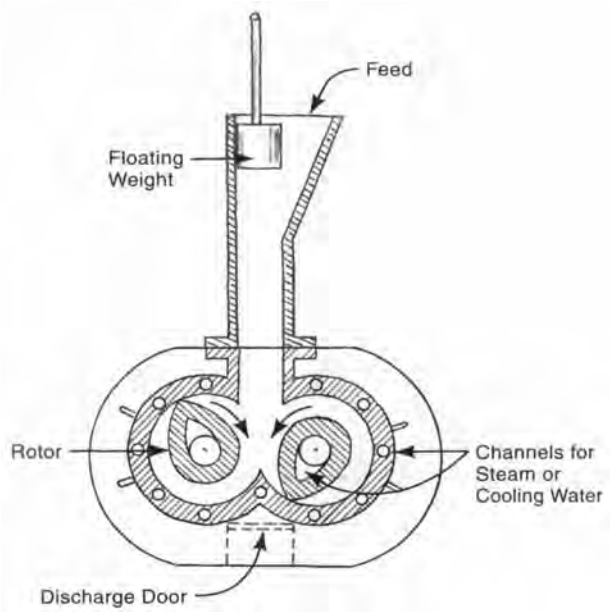

Fig. 4A4c Cross section of a Banbury mixer. Rotors within the two parallel cylindrical chambers knead, fold, shear, and mix the material thoroughly. A weighted piston holds the material in the chambers. Rotors can be of several shapes that may vary along their lengths.

A4d. ***continuous mixing*** - is quite similar to the internal intensive batch mixer (Banbury mixer) except that it is designed for continuous rather than batch operation. Like the batch-type Banbury mixer, there are two overlapping cylindrical chambers, each with a rotating mixer. There is a feed hopper at one end and a discharge chute at the other end. Near the feed end, the mixers are shaped like screw conveyors to move the material to the more aggressive mixing portion of the chambers. This mixing portion, near the discharge end, contains rotor shapes that shear and knead the material, and interchange it between the rotors. The machines are designed to provide high-quality mixing over a wide range of throughput rates. Even when operating well below maximum capacity, a homogenous mixture results. Fig. 4A4d illustrates this kind of mixer.

A4e. ***single screw extruders*** - Standard single screw extruders, as shown in Fig. 4I, have the capability of mixing plastic materials fed through them. Mixing is a desirable function during an extruding operation although it is not the prime function of the machine. Although these machines do not have the blending power of continuous mixing equipment or other dedicated mixing machines, they have proven useful for modest mixing tasks. Common operations are the mixing involved when fillers, antioxidants, stabilizers, color concentrates, or other ingredients are added to the resin compound to be extruded. These machines are also capable of blending reground scrap material. The back pressure of an extrusion die develops some back flow in the material in the barrel, further adding to the mixing. In all such machines, the added ingredient must be metered properly into the feed hopper.

A4f. ***compounder-extruder mixing*** - uses a machine similar to an single-screw extruder, but whose prime purpose is mixing rather than extruding.

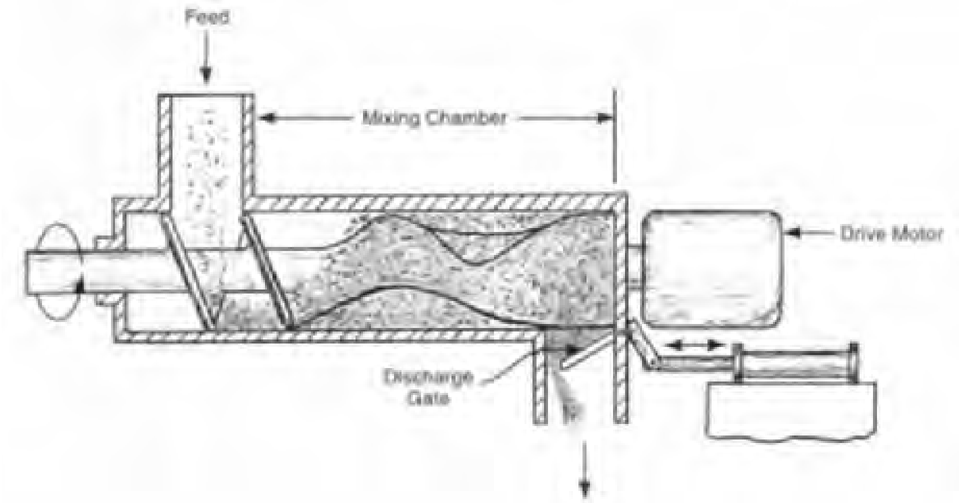

Fig. 4A4d Continuous mixing with a mixer similar to a Banbury type.

The barrel of the machine contains a series of stators outside the flutes of the extruder screw. The stators are opposite handed from the screw and are of alternatingly different heights. Torpedo and screw modifications are also made in the machine. These involve varied pitch and diameter of the screw and spiral grooves in the barrel. The screw is configured to provide an extensive mixing section and a high intensity variable-shear section. In the central area, the screw and barrel are shaped to permit the escape of trapped air and volatile materials. A vacuum pump draws them off.

A4g. ***twin screw extruder mixing*** - is performed on machines with two feed screws side-by-side in a double barrel. The screw flights usually overlap and intermesh. The screws usually rotate in the same direction, which means that there is a wiping and shearing action in the area of overlap. The material follows a figure-8 path as it moves through the machine and is thoroughly mixed. Fig. 4A4g shows the cross-section on one twin-screw mixer.

A5. ***pelletizing and dicing of plastics*** - Commercial plastics intended for molding and extruding operations are most often supplied in pellet form. The advantage of pellets is that they can be easily handled, accurately weighed, and conveniently stored. Machines to create pellets from compounded material are of two basic types:

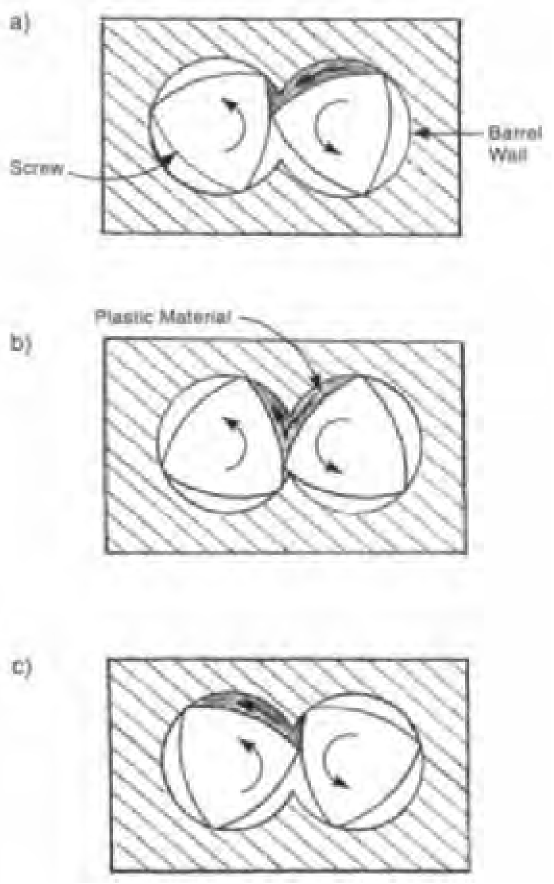

Fig. 4A4g The cross-section of a twin screw mixer showing how the material is mixed as it is transferred from one screw to the other.

1) rolls that mix the material and convert it to a sheet that is slit and diced and, 2) strand pelletizers, or extruders with attachments at the outlet end to cut extruded rod-like shapes into small pieces. The final pelletizing may be carried out with the material either cold and solid or still hot as it emerges from a die.

A5a. ***mixing and dicing with two-roll mills*** - Two-roll mills can be used as a final mixing step to introduce and blend plasticizers and fine particles of solid additives. Typically, the horizontally-shafted rolls rotate in opposite directions and they pull and nip the material through the space between them, providing good shearing action. The exiting material is slit by strip cutters into ribbons that are fed to a cooling tank and then to a dicer. Fig. 4A5a illustrates the two-roll mixing action.

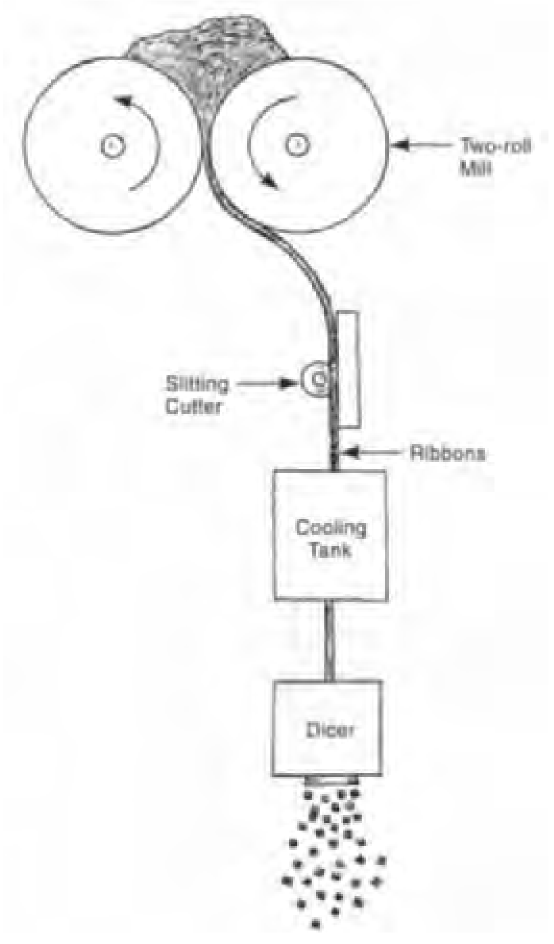

Fig. 4A5a Schematic view of two-roll mixing followed by slitting and dicing.

A5b. ***strand pelletizers*** - each consist of a screw or gear-pump extruder and die, and a rotating cutter that works against stationary blades. Each machine also has provision for cooling: by air, air-vacuum, or water, either before or after cutting. The machines include a drying system if water is used, and a means to collect the pellets. Hot-face cutters cut the extruded strands into pellets while they are still soft. Cold-cutting systems cut the strands after they have cooled. With cold-cutting systems, the strands may be drawn and pulled through a water bath before cutting. With hot-face cutting systems the cutters act upon the strands before they are cooled by air, fluidized bed, water spray, and/or water stream. The method chosen depends on the properties of the plastic, particularly its melt strength and sensitivity to temperature and its ability to withstand a residence period at a high temperature.

A5c. ***underwater pelletizing*** - Material exiting from a mixer-extruder flows through heated multiple-opening extrusion dies into a water chamber where the strands are sheared into pellets by a rotating, multi-bladed cutter moving across the die face. Water circulated through the chamber cools the material and conveys the pellets through a discharge port, away from the cutting area, and to a dryer. Water provides a convenient handling medium. The dryer then removes the water from the plastic pellets by centrifugal force. Polyethylene, polypropylene, PET, polystyrene, ABS, SAN, and thermoplastic elastomers are pelletized with this method.

B. Compression and Transfer Molding

B1. ***compression molding*** - Fig. 4B1 illustrates the process. In the most common approach, a preheated preform or tablet, normally of thermosetting plastic, is placed in an open, heated, mold half that is held in a molding press, which usually operates vertically. The press ram descends with the force half of the mold, compressing the preform, so that the material flows to fill the entire mold cavity.

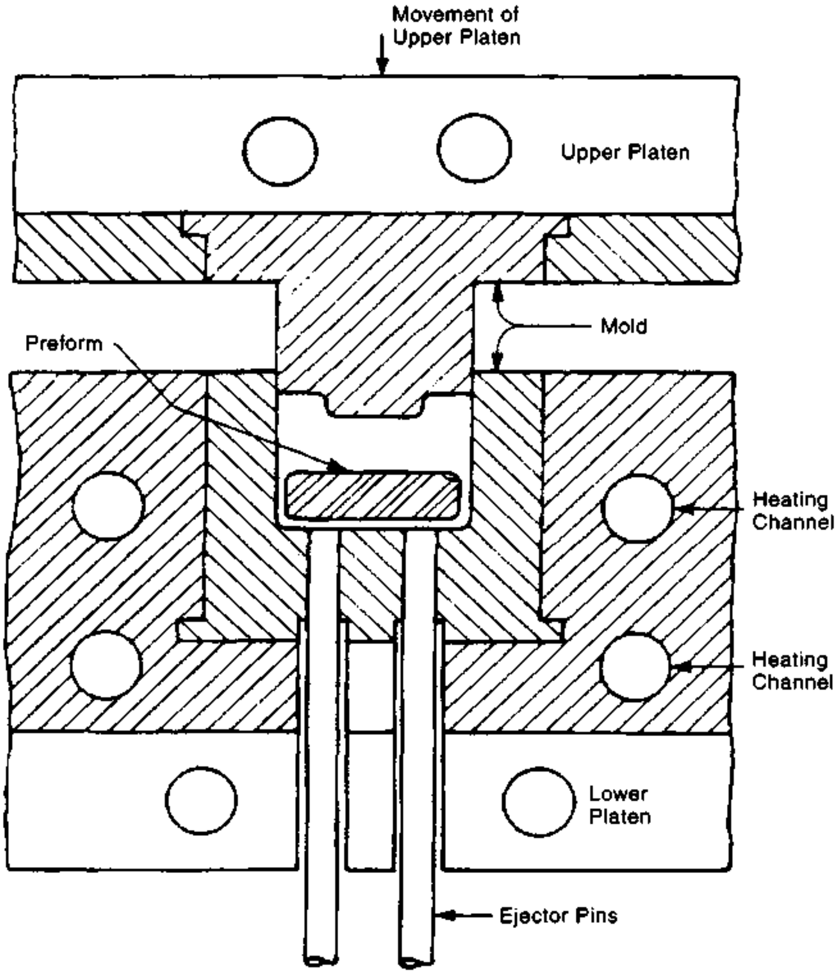

Fig. 4B1 Schematic illustration of compression molding. A preform of thermosetting plastic material is placed in a mold cavity. Heat softens the preform and the ram pressure forces the material into all portions of the mold cavity where it takes the shape of the cavity. The material then sets into a solid part that is ejected from the mold. *(from Bralla, Design for Manufacturability Handbook*[6]*.)*

The heat of the mold, and that added by the friction of the molding process causes the thermosetting material to polymerize, changing from a somewhat pasty state to a strong, solid state. The mold can be opened and the part removed. There are no sprues or runners in compression molding but the process often produces flash on the molded part at the parting line of the mold halves. This flash is removed manually with a knife, by tumbling (See 3K3.) or, in some cases, with a press containing a trimming die that fits the contour of the part. The use of a preform of developed size minimizes the amount of flash. Preforms are made by compressing granules of plastic material in a die of suitable size. Instead of preforms, the molding compound may be in the form of powder, paste, or paper or various fibers impregnated with plastic material. Ejector pins are provided in the mold to ease removal of parts. Typical compression molded parts are automobile distributor caps, kitchen utensil handles, and various rubber items.

The use of fillers and reinforcing materials is common with compression-molded thermosetting plastic parts. Section G below describes methods particularly applicable to reinforced plastics molding.

B1a. ***automatic compression molding*** - is simply the automation of the otherwise manual compression molding process. Automatic compression molding equipment usually provides: storage of the molding material, metering of the charge of material to be deposited in the mold, transfer of this quantity of material to the mold cavities, operation of the compression molding press, ejection or removal of the molded workpiece from the die cavity, and removal of any extraneous molding material that may remain in the mold cavities after the operation is completed. Although injection molding of thermoset materials is now quite common, automation of the traditional compression-molding operation is often a viable alternative as a labor-saving approach.

B2. ***transfer molding*** - This process is a cross between injection and compression molding. It normally applies only to thermosetting materials. The material is first heated in a transfer chamber, which usually forms part of the mold. When the mold closes, the material is forced by a plunger, which is also part of the mold, through sprues and a gate into the heated mold cavity. More than one mold cavity can be fed from a central chamber or "pot". The material polymerizes in the mold cavity, and a solid part is removed or ejected. Usually a preheated preform or measured amount of material is placed in the transfer chamber at the start of each molding cycle. Transfer molding permits the production of more intricate parts with thinner sections than are possible with the compression-molding process. Fig. 4B2 illustrates pot-or sprue-type transfer molding. This process is economicall for molding thermosetting plastic parts when the quantities involved are somewhat higher than are economical for regular compression molding.

B2a. ***plunger molding*** - is a variety of transfer molding. Instead of using a fixed element of the mold to force the material from the pot into the mold cavity, force is supplied by an auxiliary ram, after the mold is closed. This arrangement allows the speed and pressure of the transfer to be independent of the mold-clamping operation, thereby providing better control. Fig 4B2a illustrates a typical plunger mold.

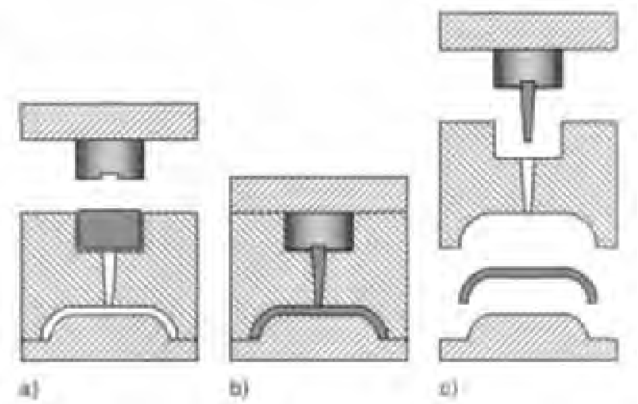

Fig. 4B2 Simplified sectional view of transfer molding. a) A heated preform of thermosetting material is placed in the transfer pot. b) The mold closes, forcing the material into the sprue channel, through the gate, and into the mold cavity. c) After the material is cured, the mold opens, pulling the sprue away from the part, and the part is ejected from the cavity.

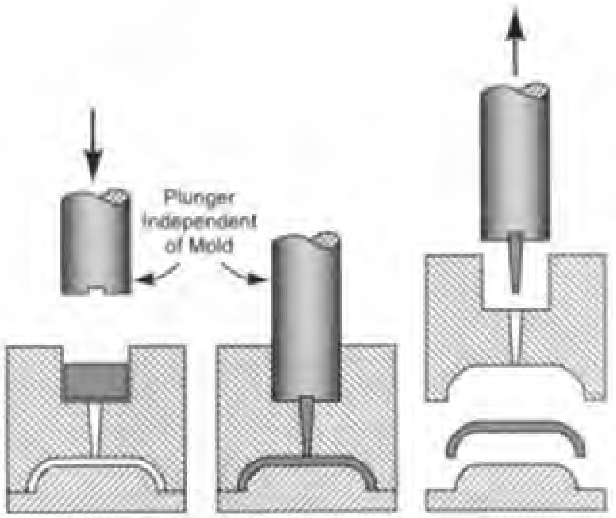

Fig. 4B2a Simplified section view of plunger molding. The process is a variation of transfer molding. It differs in that the plunger is not part of the mold but can be advanced and retracted independently.

B2b. ***screw transfer molding*** - is a further refinement of the transfer molding process. The material is heated and mixed with a plasticizing screw in the molding machine and is dropped in the pot of the mold. A plunger then forces the material into the mold cavity. Fig. 4B2b illustrates the process, which is useful when the molding material is difficult to preform.

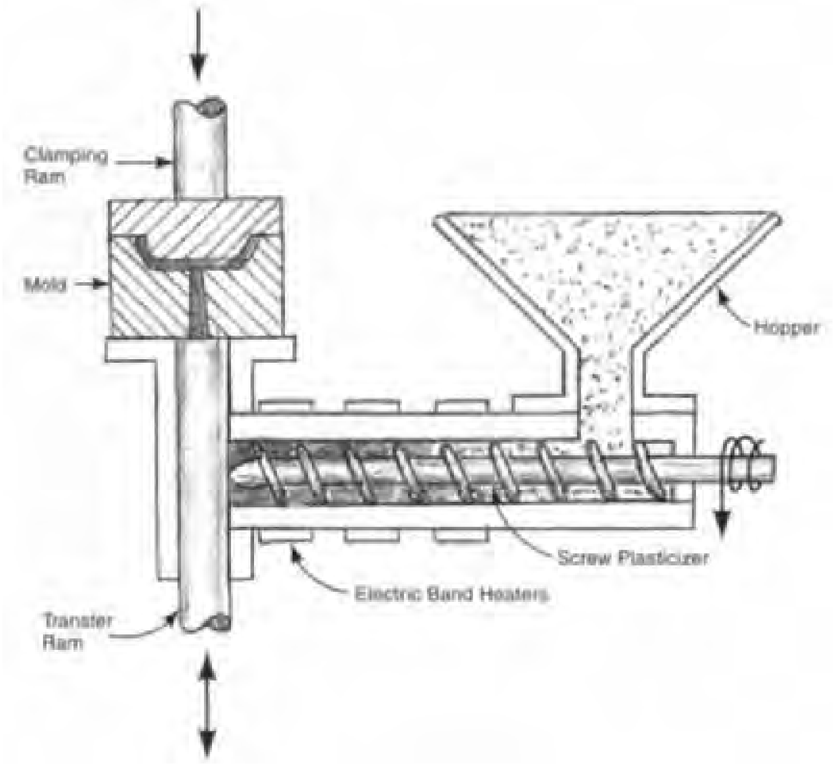

Fig. 4B2b Screw transfer molding.

B3. ***cold molding*** - is regular compression molding with no use of heat during the compression phase. The thermosetting material, including binders, is pressed to shape in the mold, then removed, and cured in a separate oven. The pressing operation is thus quicker than with hot molding, and the full molding sequence is more economical. However, the dimensional accuracy and surface finish of the molded part are usually inferior to that achieved with conventional compression molding. A number of parts can be cured simultaneously in the oven. The process can be useful for limited quantity production. The term *cold molding* is also used to identify the molding of reinforced thermosetting plastics that have been formulated to polymerize and cross-link at room temperature.

C. Injection Molding

C1. ***conventional injection molding*** - Injection molded parts begin with a plastic material in granular form, most commonly a thermoplastic. The granulated material passes from a hopper to a heated cylinder, where it changes from the heat into a pasty mass. (Most plastics, when heated, do not melt into a full liquid, but change into a mass with a consistency similar to that of peanut butter.) The pasty mass is moved forward with a screw feed, by plunger, or both, and, under pressure, is injected into a mold. (Rotation of the screw mixes the material and provides frictional heating; axial movement of the screw forces the material into the mold.) The mold is normally a steel cavity, made from at least two pieces, tightly clamped together. The cavity has the same shape as that of the final part. Multiple cavities per mold are very common. With thermoplastics, the mold is cooler than the cylinder from which the plastic was injected, cool enough so that the plastic, after it enters and fills the mold, cools and solidifies. A typical temperature of the material in the machine cylinder is 400°F. (200°C) and, in the mold, 180°F (80°C). The machine cylinder is heated electrically and the

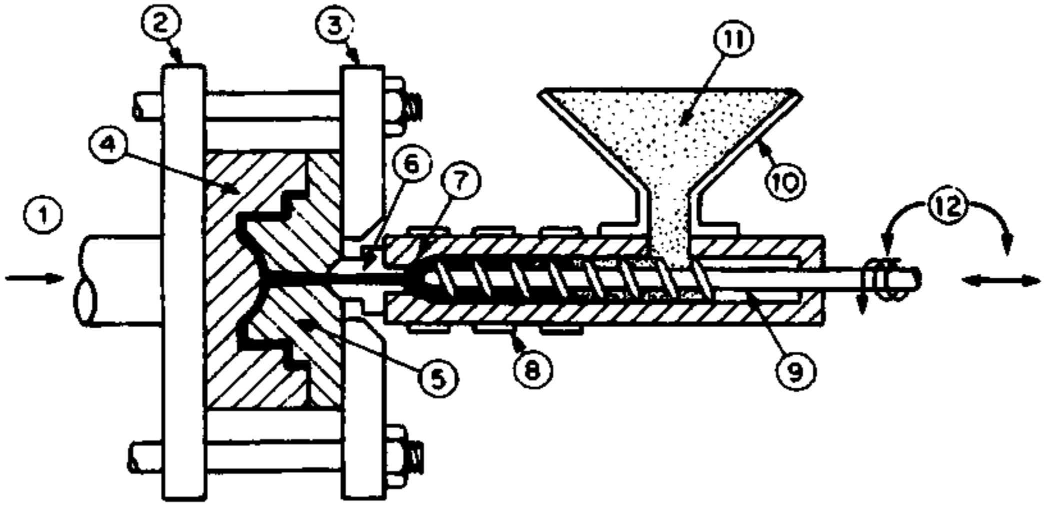

Fig. 4C1 Schematic illustration of injection molding. (1) Mold clamping force. (2) Movable mold platen. (3) Fixed platen. (4) Cavity half of mold. (5) Force half of mold. (6) Nozzle. (7) Cylinder. (8) Electric band heaters. (9) Reciprocating screw. (10) Hopper. (11) Granulated-plastic material. (12) Rotary and reciprocating motion of screw. *(from Bralla, Design of Manufacturability Handbook*[6]*.)*

mold temperature is regulated with circulating water. The process is normally fully automatic. Cycle times range most commonly from about 15 to 45 seconds, the time being dependent on the wall thickness and size of the part and many other process factors. Figure 4C1 illustrates the injection molding process.

Injection molding is by far the most common process used in the manufacture of parts from plastics. It is almost an ideal mass production method. Parts can be complex and can have color and surface texture molded in (with no need for costly secondary operations). They can have such features as hinges, springs, screw threads, and bearings incorporated fairly easily. Many companies that have made significant DFM (Design for Manufacturability) improvements in their products have done so by combining a number of separate parts and fasteners in a fewer number of injection-molded plastic parts that snap together without external fasteners.

Some typical injection molded parts are the following: housings for various products such as computers, home entertainment products, telephones, caps for containers, pails, handles, laundry baskets, toys, and parts for automobiles and refrigerators.

C1a. ***hot runner molding (heated runnerless molding)*** - Injection molds have channels that convey the molten plastic from the molding machine nozzle to the gate of each mold cavity. Normally, the material in these channels cools and solidifies along with the part, forming runners, which are ejected from the mold with the part. The runners are cut from the part, usually by the molding machine operator during the next machine cycle. Although the runner material, usually can be reground and used, it is advisable to avoid the need for these steps by the use of hot runner molds. These molds incorporate electrical units to heat the runners so that the material in them remains in the molten state between shots and is not ejected from the mold with the part. Trimming of the runners from the part is eliminated, as is the need for scraping or regrinding and reprocessing the runner material. Less material needs to be heated for each shot; material is not subjected to repeated heating, which may degrade it, and it is kept at a more uniform temperature as it enters the mold. Another advantage is that the molding cycle is often speeded up because thin-walled parts do not have to wait for the thicker sprues and runners to solidify, and less material needs to be heated for each cycle. Some plastics have a narrow range of processing temperatures and are better used in a hot runner system that does not force them to be heated to counteract a cooling environment before they reach the mold cavity.

C2. ***injection molding of thermosetting plastics*** - This process is very similar to the injection molding of thermoplastic materials. A major difference, however, is that the mold is heated rather than cooled. Another difference is that the injection nozzle may be alternately heated and cooled - heated during injection to facilitate polymerization, but cooled between shots to retard the polymerization of material not yet injected. The thermosetting material is preheated in the cylinder of the machine, but the temperature is not high enough to cause polymerization to take place during the limited time the material is in the machine barrel. Heating reduces the viscosity of the material, however, which facilitates injection and mold filling. Polymerization does take place after the material is subjected to the heated nozzle, the frictional heat of injection, and the heat of the mold. After polymerization, a solid piece can be removed from the mold. Injection pressure is up to about 28,000lbf/in^2 (190MPa). The cycle is normally longer than that required for thermoplastic materials but shorter than that required for compression or transfer molding. The process is sometimes called, automatic transfer molding.

C3. ***structural foam molding processes*** - provide parts with a wall structure that includes a solid skin and a core that is cellular. The cellular core comes from the expansion, during molding, of a blowing agent, either an injected gas, usually nitrogen, or a chemical that decomposes into a gas at the molding temperature. A nucleating agent, a fine dry powder, is also added to the resin to control the size of the cells. Structural foam components have a high degree of stiffness in comparison to their weight. Large parts like containers, pallets, and housings, are molded by this method because it provides a means to maintain stiffness without using excessive material or slowing the molding process unduly. The process can also be used with flexible materials to produce components with cushioning or sealing properties.

C3a. ***low-pressure injection molding of structural foam plastics*** - In this process, the amount of material injected into the mold is carefully controlled and is less than that required to fill the mold. A blowing agent in the plastic material causes it to expand and fill the mold cavity. The portion of the material that contacts the cool surface of the mold cavity forms a dense skin, while the interior portion becomes cellular. Since the mold is not packed with plastic material, pressures are much lower than with conventional injection molding. Mold costs are low because the molds do not have to withstand high pressures. Large parts - up to about 120 lb (55 Kg) - can be molded with the process. Typical applications are containers, pallets, lawn furniture, outdoor equipment components, and shutters.

C3b. ***reaction injection molding*** - This process involves the injection, into a mold, of highly-reactive liquid components, usually of thermosetting material. The components (Polyurethane plastic is most common.), are fed to a mixing chamber just prior to injection. Heating is not required. The materials react, polymerize, and foam in the mold, forming a part with a somewhat smooth and dense skin and a cellular core. Pressures are high in the mixing chamber but low (50 lbf/in^2 or 340 KPa) in the mold to allow foaming to take place. This permits the use of lighter, lower-cost molds. After molding, parts are post-cured at about 250°F (120°C) for up to 1 hour. The process is suitable for large parts, including appliance components, doors, furniture frames, and vehicle body parts, as well as smaller parts such as gears, wheels, rollers, and sporting goods, Both rigid and flexible material formulations can be used. Fabric and strand reinforcement may be mixed in to provide added strength and stiffness. Epoxy, nylon, and polyester are also molded with this method. See Fig. 4C3b for an illustration of the process. With flexible formulations of urethane, reaction injection molding is used to produce furniture cushions and mattresses.

C3c. ***high-pressure injection molding of structural foam plastics*** - In this process, normal injection-molding action and pressure, fill a mold completely with a mixture of a polymer and a chemical blowing agent. The size of the mold cavity

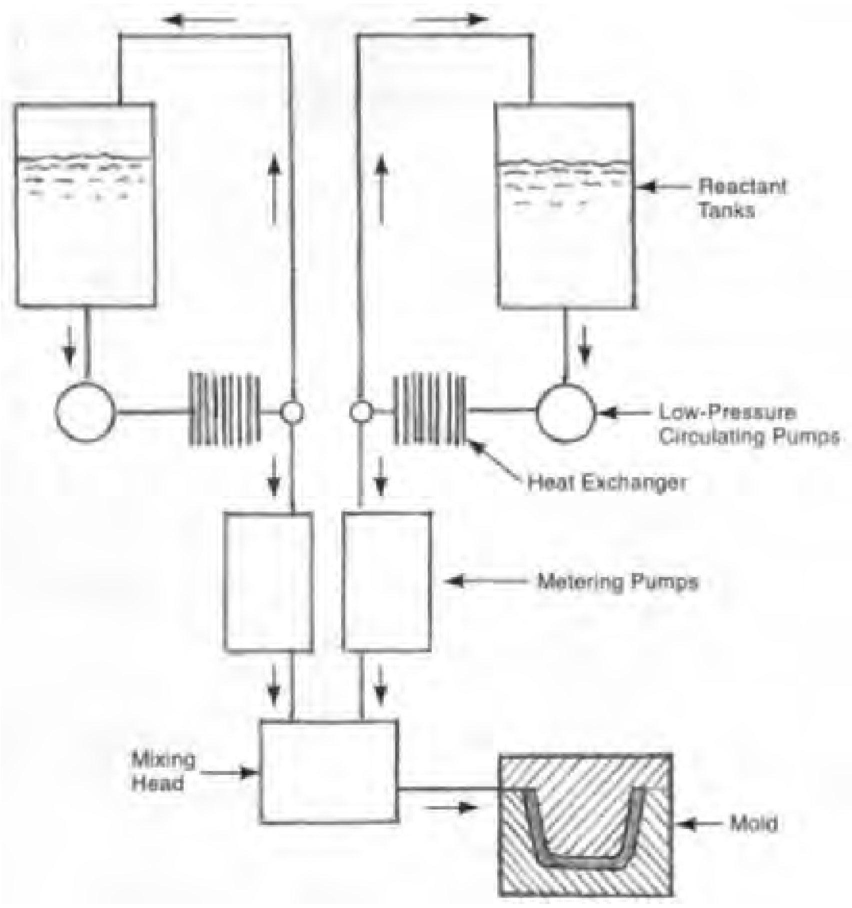

Fig. 4C3b Reaction injection molding.

is then increased by opening the mold platens or by retracting a core element. The material in the mold then foams and fills the expanded space. The high-pressure process uses more expensive and complex tooling but provides a smoother part surface than that obtained with low-pressure injection molding or by reaction injection-molding of structural foam. This process is used for items such as business machine housings where the swirled appearance of the surface of low pressure molded parts may not be acceptable.

C3d. ***gas counterpressure molding*** - The principle of this process is to delay the foaming until after a solid skin has formed on the plastic entering the mold, insuring that the molded part has a smooth surface. This is accomplished by pressurizing the mold with nitrogen just prior to injection. The pressure is slightly above the expansion pressure of the blowing agent in the injected plastic. At the proper instant, before the mold is completely filled, the pressure is released and the foaming action commences. However, foam does not break through the surface of the injected material. Therefore, no swirling pattern appears on the part's surface.

C3e. ***co-injection or sandwich molding*** - Two materials are injected in sequence and partly simultaneously into the mold through a special valve. One material forms the skin of the part and the other forms the core. The core material contains a blowing agent to provide foaming action. Two different plastics can be used. The core material can consist of a lower cost material or even recycled plastics. Surface details can be produced accurately

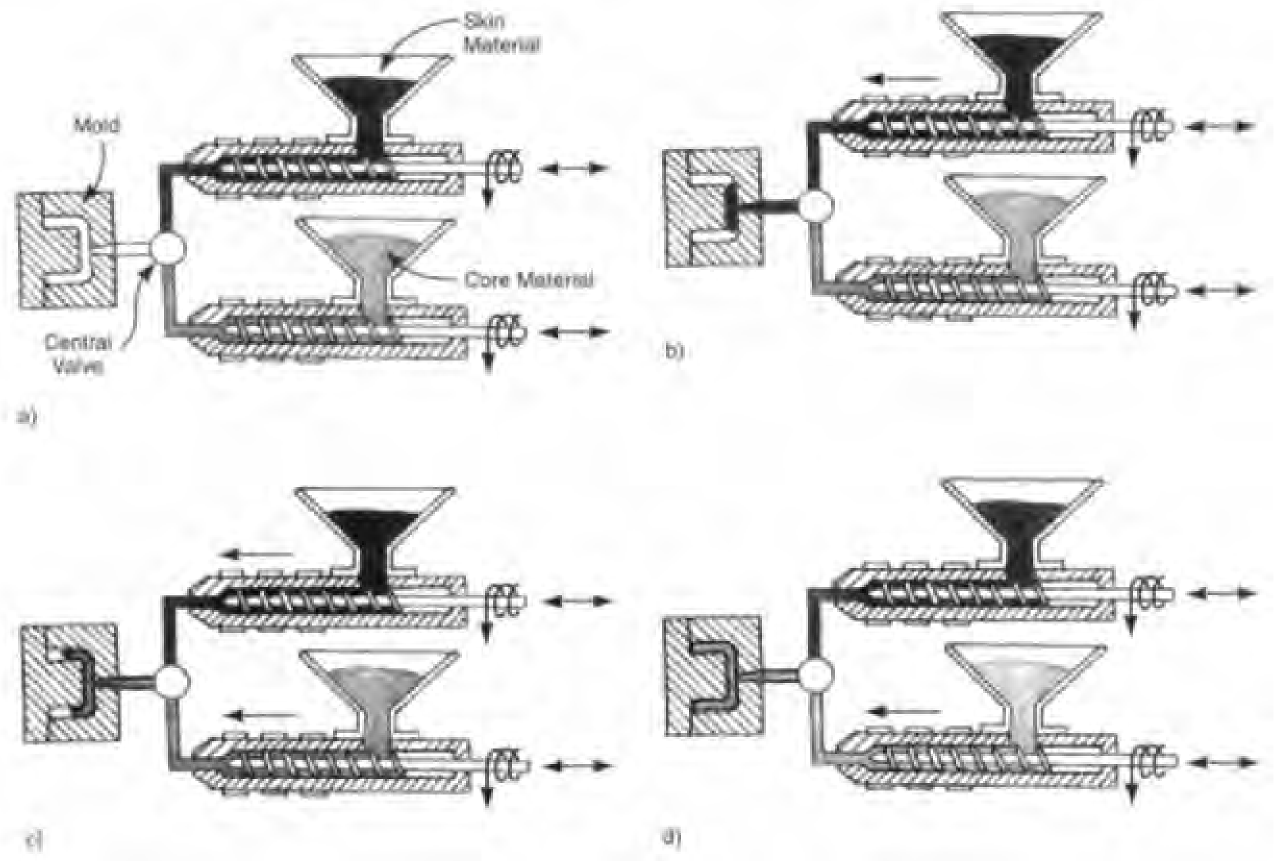

Fig. 4C3e Co-injection or sandwich molding: a) The machine arrangement. b) The skin material (shown in black) is injected first and a thin layer solidifies as it meets the cool walls of the mold. c) Both materials are then injected until all mold walls are contacted by the skin material. d) Filling of the mold is completed with further injection of the core material (shown in gray).

and there is no swirl pattern on the surface. See Fig. 4C3e for an illustration of the process.

C3f. ***gas-assisted injection molding*** - Parts made with this process do not have a foam core but instead have a hollow interior due to the injection of nitrogen into the plastic charge as it enters the mold. The gas does not break through the surface of the plastic but does form channels in the hotter, less-viscous material in the interior of the charge. The result, when the mold is filled, is a part with a smooth surface that matches the shape and finish of the mold, but is not solid. Less material is used and the part has similar stiffness advantages, per unit of weight, as a structural foam part. Fig. 4C3f provides a schematic illustration of the process.

C3g. ***casting of structural foam plastics*** - is described under *casting of plastics*. See H2.

C3h. ***extrusion of structural foam plastics*** - Extruded profiles can be made with a solid skin

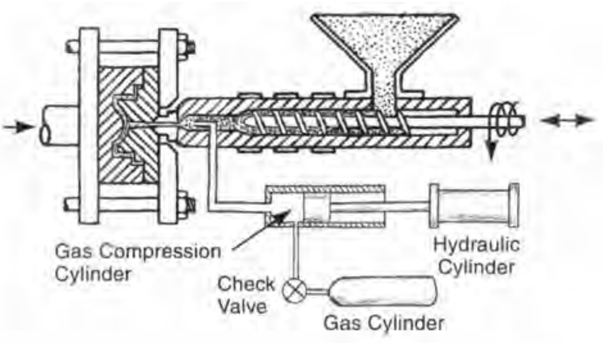

Fig. 4C3f Gas-assisted injection molding creates a part with properties similar to those of a part molded with structural foam.

and foam interior, similar to the structure of injection-molded structural-foam parts. The means of achieving the cellular structure is the same as that used with structural-foam injection molding. The extrusion process is also quite similar to that used for solid profiles. When the part is to have a cellular core, one method, called *free-foaming*, extrudes the material - containing blowing and nucleating agents - through a conventional die. Pressure in the extrusion barrel prevents the blowing agent from foaming until the material passes through the die. The extrudate is allowed to expand to approximately its final dimensions after it exits the die. It is then passed through a cold sizing die, which produces the final dimensions. In another method, the patented Celuka process, the extrusion die is of approximately the final dimensions desired. However, the die contains a centered mandrel that tapers to a point some distance from the die face. This mandrel allows room for the polymer to foam inwardly toward the center, thus producing a low-density foam core. A second die, in line with the first, sizes the extrudate and cools the surface to form the desired dense skin. Structural foam extrusions are used for window and door frames, building panels, and other extrusion applications where the lighter weight and better stiffness per unit weight of structural foam are desired. Extruded-foam polyethylene is used as an insulator for coaxial cable. (Note: Also see extrusion of non-structural foam in paragraph I3.)

C3i. ***slabstock foam process*** - might be considered to be reaction injection molding of polyurethane foam without a mold. Instead of being injected into a mold, the reactive polyurethane material is deposited on a wide, moving conveyor belt. There it continues to polymerize and foam, expanding to a mass as much as 8 feet (2.4 m) wide and 4 ft (1.2 m) high. Thereafter the mass is cut into long lengths and stored for additional curing before it is processed further. Further processing usually involves straight or curved cuts to shape the foam slab into such products as seat cushions, mattresses, carpet underlayments, and components of textile-based products. Thin sheets are sliced from the slab and rolled for later processing.

C4. ***expanded polystyrene foam processes*** - Expandable polystyrene (EPS) is supplied by manufacturers in bead form. The beads contain a blowing agent (usually pentane) that expands them from 2 to 50 times upon exposure to heat. By controlling time and temperature, the amount of expansion can be controlled. Expansion of the beads during molding produces a component with excellent insulating and flotation properties. Processing usually involves a pre-expansion of the beads as a first operation.

C4a. ***pre-expansion of EPS beads*** - can be accomplished with any of several batch methods involving ovens, steam chambers, or hot water baths, and several continuous methods involving hot air, radiant heat, or steam heat. All these methods expand the beads to approximately the level of expansion specified for the eventual molded part. The continuous steam-heating approach is by far the most common. It involves a continuous feed of beads to a steam chamber where the beads are mechanically agitated and mixed with steam. As they are heated by the steam, they expand from the vaporization of the blowing agent. Additional expansion comes from the absorption of steam. Agitation prevents the beads from fusing together. The amount of expansion is controllable and depends on the temperature of the steam, the feed rate of the beads and the amount of air introduced to the expansion chamber. As the beads expand, they tend to rise to the top of the chamber and overflow it and are conveyed by air flow to an open storage bin. In the storage bin, the beads cool and their expansion subsides somewhat and gradually stabilizes. The bins are open and subjected to additional air flow to dry the beads. After several hours (typically from about 3 to 12), the beads are dry and ready for molding.

C4b. ***shape molding of EPS beads*** - Fig. 4C4b illustrates this process. Pre-expanded beads are conveyed by air to the mold where a measured amount is introduced to the mold. The mold closes and steam is introduced through small holes, heating the beads and causing them to soften, fuse together, fully expand, and fill the entire mold cavity. The expanded beads block the small steam holes, preventing further introduction of steam. The mold is then cooled with water until the part stabilizes. The mold is opened and the part is ejected. Drinking cups for hot beverages, picnic coolers, fast-food containers, fitted support blocks in shipping

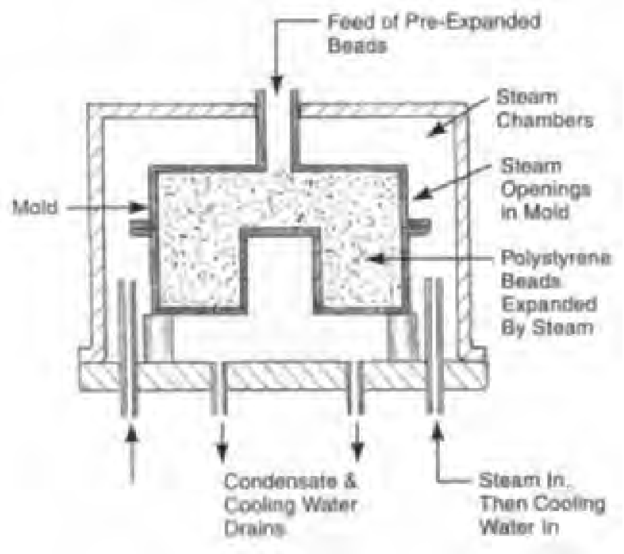

Fig. 4C4b Shape molding with EPS beads.

cartons, and display figures, are typical products molded from EPS with this method. Drinking cups are produced from small beads with typical densities of 2 to 5 lb/ft^3 (32 to 80 Kg/M^3). Sometimes, a vacuum is drawn on the mold cavity to provide room for the steam and to facilitate the expansion of the beads. Other heating methods - hot air or conduction through the mold - may be used to heat the beads.

C4c. ***block molding of EPS*** - to produce sheets or slabs of foam material proceeds quite similarly to shape molding. In this method, the mold cavity is rectangular and can be rather large - as large as 4 × 16 × 3 feet. Larger beads are also used for such components. Vacuum assistance may be employed to remove air from the mold. After molding, the blocks produced are sliced into thin slabs or other shapes by hot wire or band saw. Building insulation panels and flotation blocks are products made by this approach. Typical densities of insulating board are 1 to 2 lb/ft^3 (16 to 32 Kg/M^3).

C4d. ***expanded polyolefin foam process*** - Recently, polyolefins have been produced in a fashion similar but not identical to EPS. Special polypropylenes (EPP) have been manufactured to meet this market. Unlike EPS beads, EPP beads do not retain a blowing agent very well, so, EPP beads are usually pre-expanded by the resin manufacturer. The converter fills aluminum molds with the pre-expanded beads and applies high-temperature steam, heated air, and other gases to heat the beads until the surfaces are tacky. The mold is then cooled under pressure until the beads are fused together. EPP foams are very soft and ductile. They are used in packaging for shock mitigation and in vehicle bumpers. EPP foams tend to be porous and so are not used in liquid containers.

C5. ***two-color injection molding*** - This method is used for computer keyboard keys, two-color automobile tail lights and similar parts with inlaid color effects. The part is molded in two operations using two different mold cavities. The part molded in the first operation is used as an insert when the final part is molded in the second operation using a different color plastic. Fig. 4C5 illustrates the process sequence.

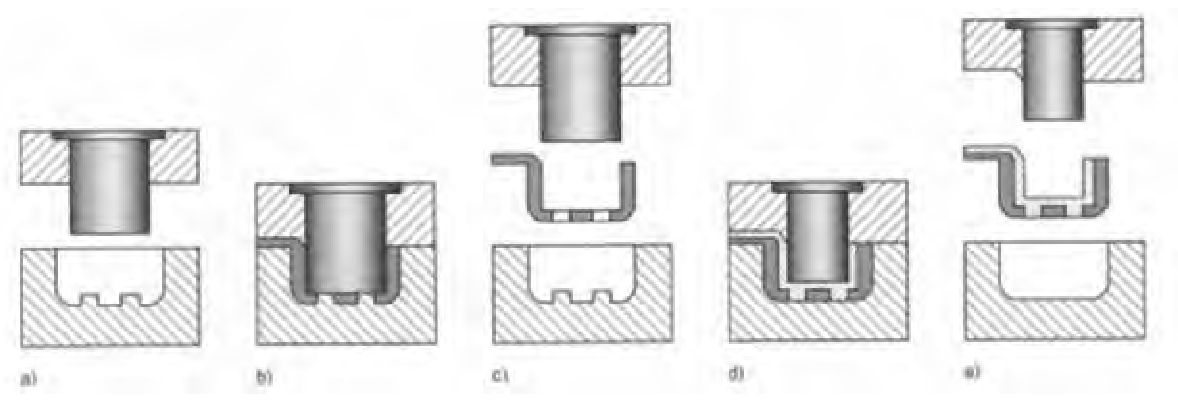

Fig. 4C5 Two-color injection molding: a) The mold for the outer shell. b) Plastic is injected in this mold to make the outer shell. c) The molded outer shell ejected from the mold. d) The second color is injected into a second mold that contains the outer shell as an insert. e) The second mold opens and the two-color part is ejected.

C6. ***insert molding*** - simply involves injection (or compression) molding in which other components are placed in the mold before the mold closes and the plastic material is introduced. Plastic material flows around the inserted components and holds them in place. This is the oldest method for combining metal and plastic parts and is extensively used. It provides excellent holding power for the insert. However, placement of inserts slows the molding cycle, adds the risk of damage to the mold from a fallen insert and has the possibility of allowing plastic to enter an unwanted area of the inserted part, necessitating rework. Metal inserts are sometimes used when screw threads, studs, or other elements, having strength or wear resistance greater than that of the plastic material, are required. Another application is the production of electrical plugs, sockets, and switches, when the metal electrically conductive elements are encapsulated in an insulating plastic. One common molding method uses duplicate mold halves on a turntable so that the inserts can be loaded in one mold cavity on the turntable while molding takes place at another turntable location. Inserts are most commonly metal, but inserts of other plastics, paper (e.g., labels), ceramics, or other materials can also be used. (Other methods for combining plastics and other materials in a single component are discussed in section N1 below.)

D. Thermoforming (Vacuum Forming)

Thermoforming, as the term is normally used, involves the shaping of a thermoplastic sheet by heating it to the softening point and then bringing it into contact with a cooler mold whose shape it takes. The process is often called vacuum forming because the most common method involves the use of a vacuum to draw the sheet against the mold. However, air pressure, a mating die, or some combination of methods, can be used to force the sheet to conform to the mold. The sheet cools after a period of contact with the mold and stiffens into the desired shape. Trimming of the formed sheet usually follows forming. Since thermoforming involves modest forces, tooling can be made from nonmetallic materials such as wood or plaster for prototype and low-quantity applications. Molds for commercial-quantity production are usually made of either cast or machined aluminum and are temperature controlled. Thermoforming equipment tends to be less expensive than that used for injection molding or extrusion, especially when larger parts are involved. Holes, cutouts, and slots in thermoformed parts are produced by secondary drilling, punching, or routing operations.

Applications for thermoforming can be classified into two branches: 1) disposable parts made in high quantities from thin-walled material. This kind of thermoforming is sometimes called *roll-feed thermoforming*, since the initial sheet thickness is usually less than 0.060 in (1.5 mm) and is delivered to the machine in a roll. Thin-gauge thermoforming is a high-speed process used extensively for blister packaging and other packaging for food or medical items, hardware, and many other products. Frozen food trays are typical examples. 2) heavy-walled parts used in permanent applications, made from sheets precut to the approximate dimensions of the finished part and delivered to the machine stacked on a pallet. This kind of thermoforming is sometimes called *cut-sheet thermoforming*. Heavy-gauge thermoforming is substantially slower than thin-gauge thermoforming primarily because of longer sheet-heating times. Lighting panels, equipment housings, and interior panels and liners for automobiles are examples.

The several process variations described below produce either a better or more intricate form or a more uniform wall thickness after forming than straight vacuum forming.

D1. ***straight vacuum forming*** - is probably the most common thermoforming process. It usually involves the use of a female mold. The heated sheet sags and then is drawn by vacuum against the mold where it cools and becomes more rigid. The process is useful when the depth to width ratio of the formed portion is 0.5 or less. This method is illustrated by Fig. 4D1.

D2. ***pressure forming*** - is very similar to vacuum forming. However, instead of relying on atmospheric pressure on one side of the sheet and a vacuum on the other side, higher pressure from compressed air is applied on the top side to force the sheet against the mold. The mold is vented and, additionally, a vacuum may be pulled on the underside of the sheet.

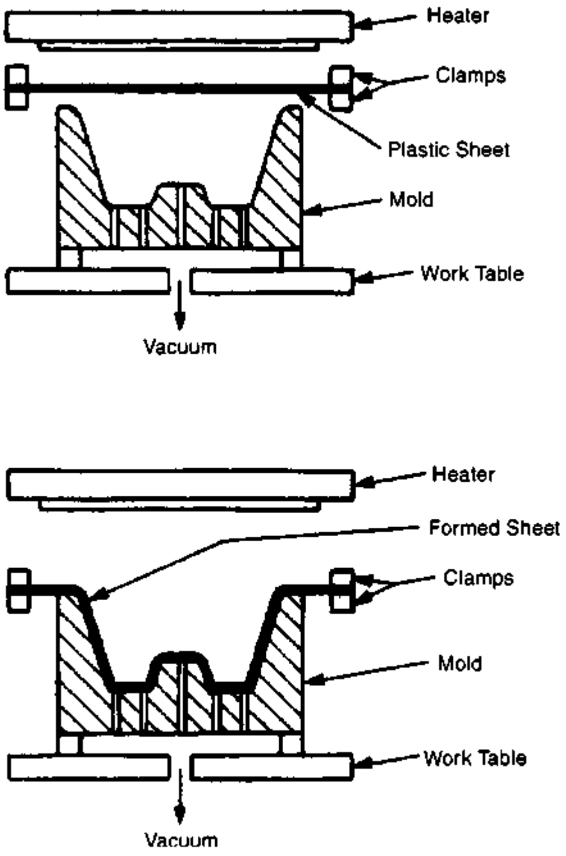

Fig. 4D1 Straight vacuum forming. Thermoplastic sheet is clamped, heated to the softening point, and placed against a one-piece mold cavity. A vacuum pump evacuates the air below the sheet, and atmospheric pressure forces the sheet against the mold so that it assumes the shape of the mold. The sheet cools and stiffens and can be removed and, if necessary, trimmed. *(from Bralla, Design for Manufacturability Handbook*[6].)

The advantage of this approach is that a somewhat higher pressure differential can be obtained between the upper and lower sides of the sheet, making it possible to form thicker sheet - up to about 0.375 in (10 mm) - and to produce more sharply-defined forms in the sheet. Fig. 4D2 shows this approach.

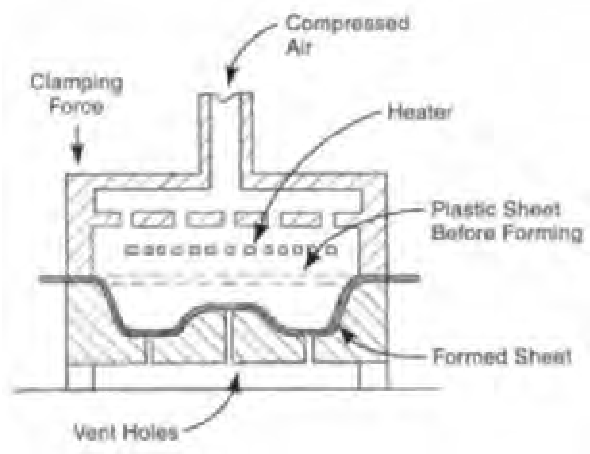

Fig. 4D2 Pressure forming is similar to vacuum forming except that the pressure differential across the sheet is achieved by positive pressure rather than a vacuum.

D3. ***drape vacuum forming*** - uses a male mold. The heated sheet is pulled down and "draped" over the male mold, prestretching the sheet. When the frame holding the sheet contacts the mold and seals the edges, a vacuum is applied, pulling the sheet firmly around the mold. When the sheet has cooled, it is removed from the mold. This approach is useful for deep-formed parts and permits reentrant shapes to be formed. See Fig. 4D3.

D4. ***plug-assist forming*** - uses a male plug that approximately conforms to the mold cavity shape to pre-stretch the material before it is drawn into the female mold. This sequence, shown in Fig. 4D4, minimizes thinning of the sheet at the bottom of the formed portion and permits easy removal of the formed part from the mold. The heated sheet is placed over the mold and the plug advances to push the sheet into the mold cavity. As the plug advances, the air under the sheet is compressed, forcing the sheet up around the plug. The prevents the sheet from touching and being cooled by the sidewalls of the cavity as the sheet is stretched. The movement of the plug stops before it makes contact with the cavity. The air below the sheet is evacuated and the vacuum draws the sheet off the plug and against the cavity. Then the sheet cools and takes its permanent shape. (The process can also be carried out with positive pressure above the sheet and no vacuum, with only a vent below the sheet.) The plug occupies 70 to 90% of the volume of the cavity. It has the approximate shape of the cavity, and a smooth surface, It is heated to a temperature just below that of the heated sheet. This process is useful for making cup- and box-shaped parts.

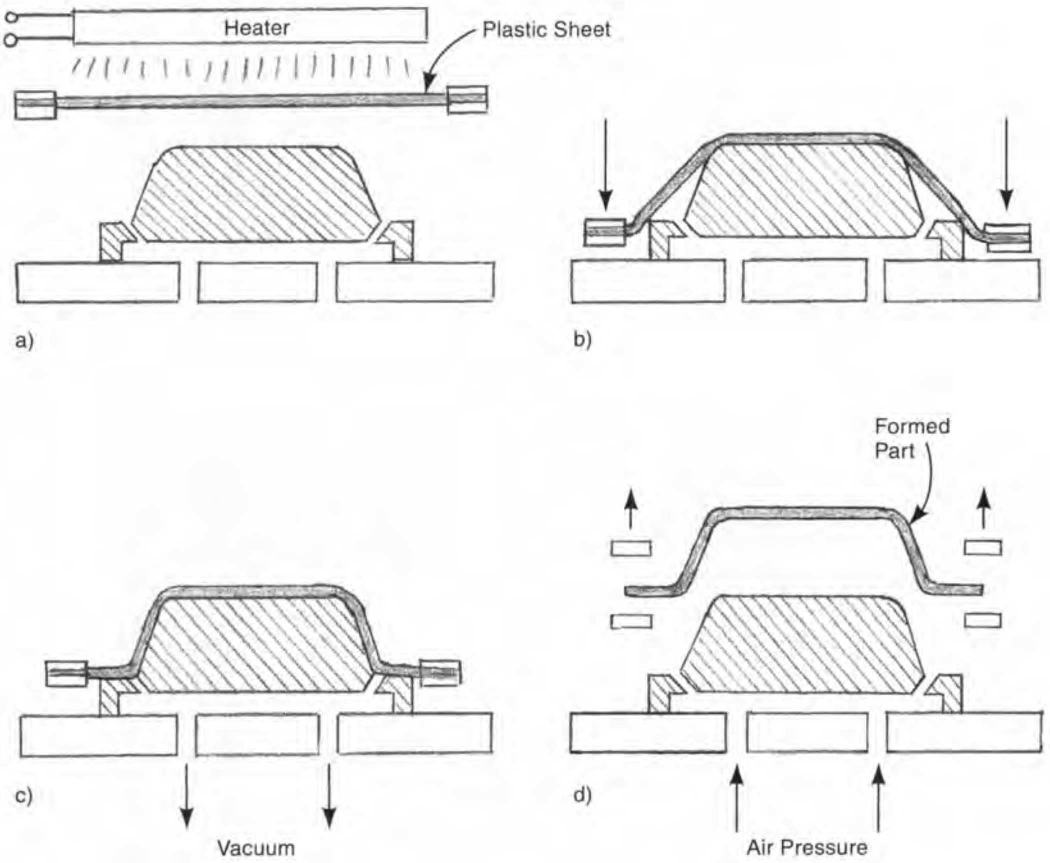

Fig. 4D3 Drape vacuum forming. a) The plastic sheet is placed above the male mold and heated. b) The heater is retracted and the sheet is draped over the mold. c) A vacuum is applied to the underside of the sheet, drawing it tightly against the mold. d) When the sheet has cooled and hardened, the vacuum and grippers are released and positive air pressure forces the sheet off the mold.

D5. ***vacuum snap-back forming*** - In this method, a sheet is heated and sealed across the top of an open chamber. A vacuum pulls it into a concave shape. A male mold is then introduced to the cavity from above. The vacuum under the sheet is gradually reduced and a vacuum is created on the opposite side of the sheet. It pulls the sheet tightly against the male mold where it cools and hardens. This procedure aids in maintaining a more uniform sheet thickness, provides some other quality advantages, and can reduce the necessary size of the starting sheet. Luggage components, automobile parts, and computer housings, which have a textured surface on the convex side, are formed with this method. Fig 4D5 illustrates the process.

D6. ***slip-ring forming (slip forming)*** - is a process similar to deep drawing of sheet metal (2D5), and provides a more uniform wall thickness for thermoformed shapes. The method is used when the plastic at its forming temperature is too stiff to be stretched into complex shapes. The primary applications are with highly-filled and fiber-reinforced thermoplastics. It is used for making such products as firemen's helmets and military aircraft structural supports. The sequence of steps in the operation is as follows: An oversize sheet is held loosely by a ring whose shape is similar to that of the mold. The sheet is heated and descends against a male die. (In some arrangements, the die descends against the sheet.) The sheet slips through the ring as it is drawn into

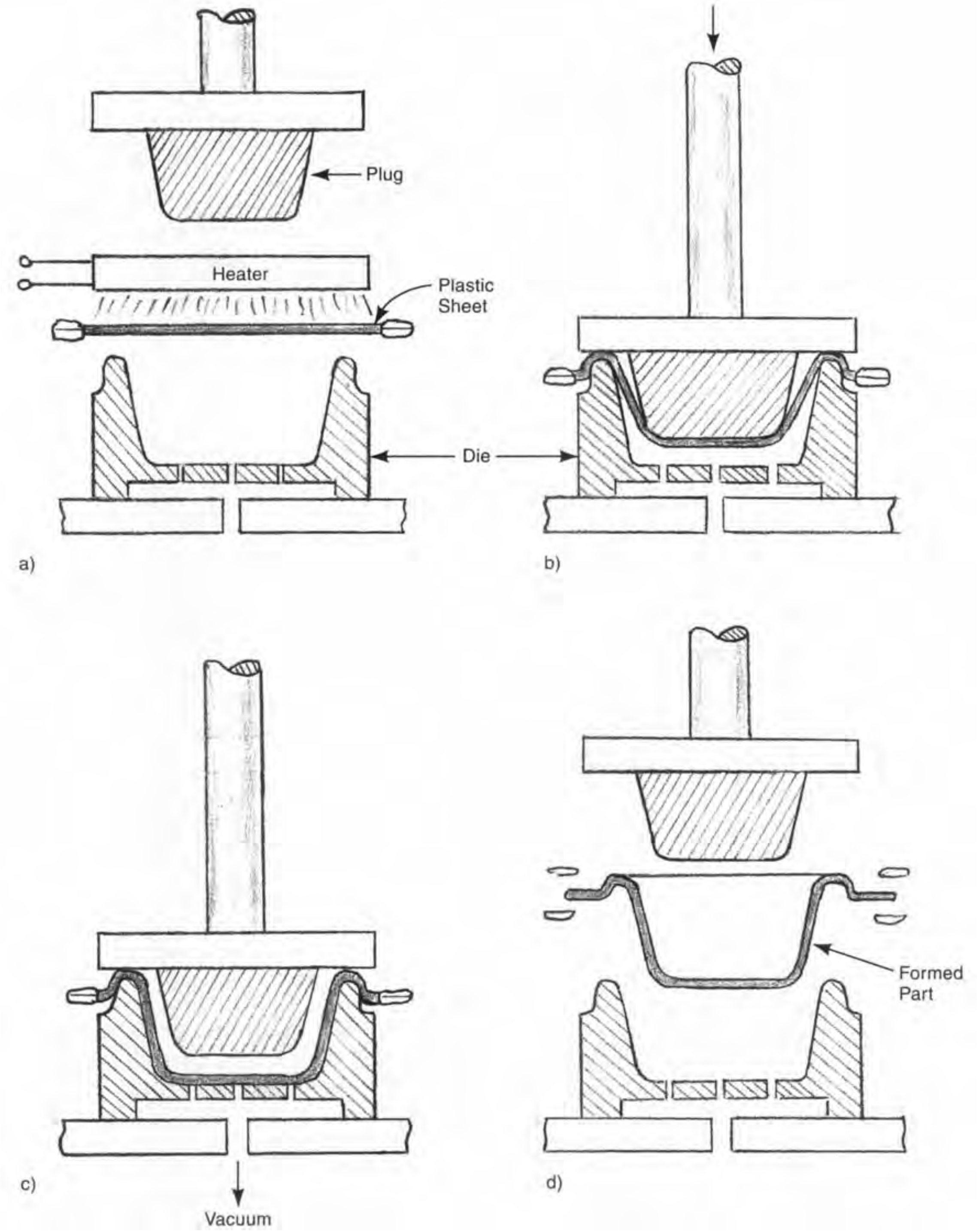

Fig. 4D4 Plug-assist forming: a) The plastic sheet is placed above the mold and heated. (The plug is also heated but to a slightly lower temperature.) b) The heater is removed and the plug descends to move the sheet into the mold cavity. c) A vacuum draws the sheet against the walls of the mold cavity, where the sheet cools and sets to its formed shape. d) The plug retracts and the formed part is removed from the mold.

Next Page

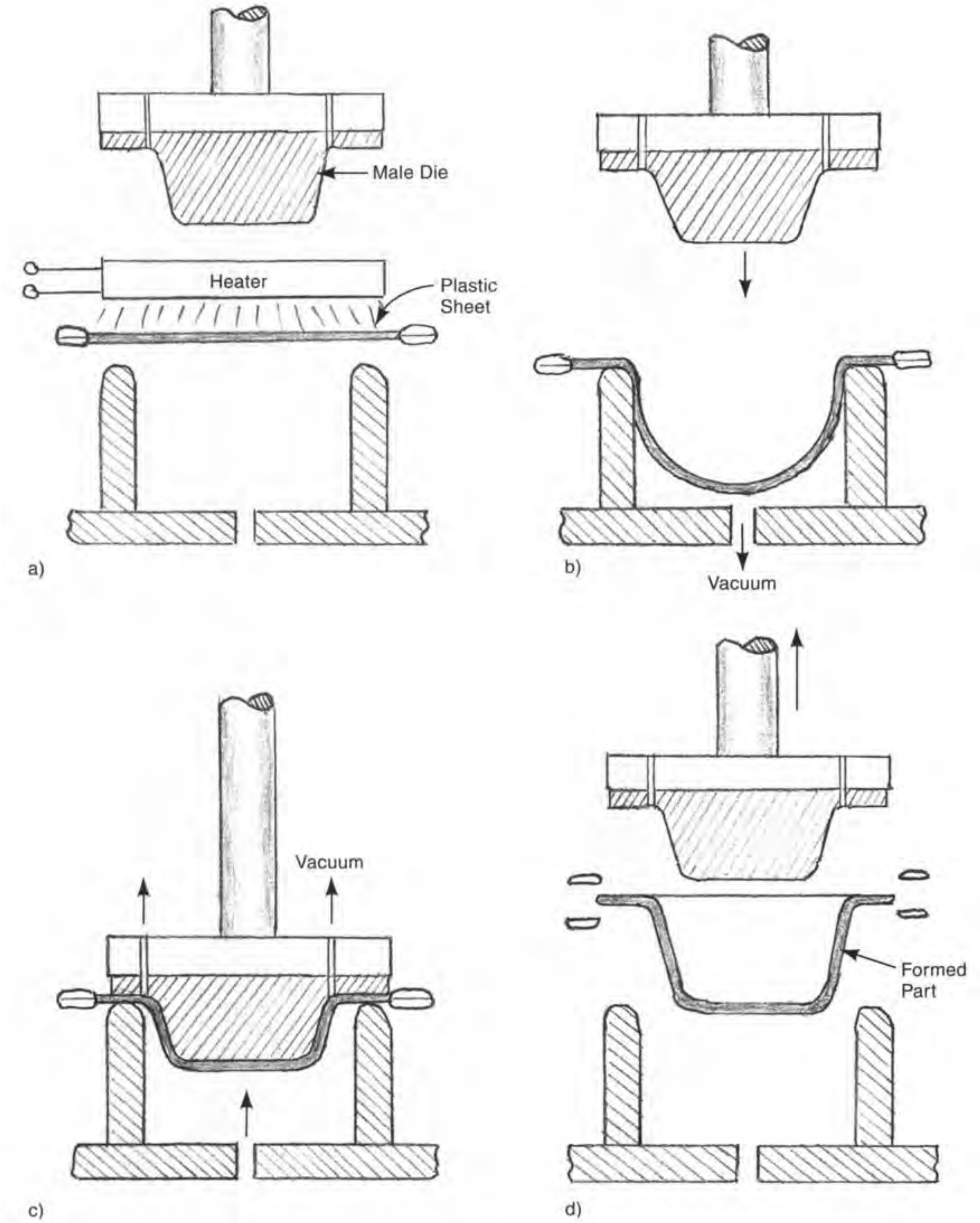

Fig. 4D5 Vacuum snap-back forming. a) The plastic sheet is placed above the mold and is heated. The heater is then retracted. b) The plastic sheet is lowered and sags into the mold, assisted by a vacuum drawn from below. c) The male die descends against the sagged sheet. The vacuum is reversed, drawing the sheet against the male die. d) When the sheet cools and sets to its formed shape, the mold is opened and the formed part is removed.

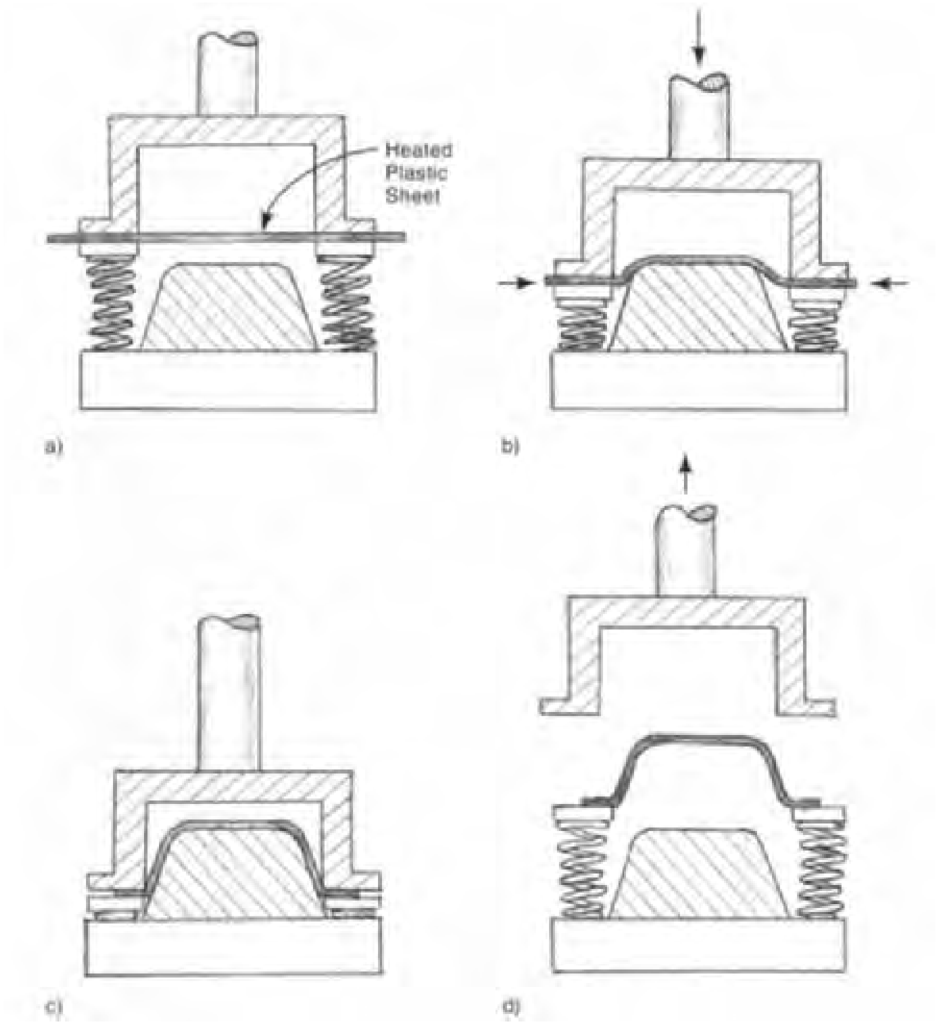

Fig. 4D6 Slip ring forming (slip forming): a) The heated sheet is held above the male mold. Holding force is only moderate. b) The sheet is pulled over the male die and partially slips through the spring-loaded holders. c) When the ram has completed its downstroke, the sheet is drawn over the male die. d) When the sheet has cooled, the ram retracts and the formed, drawn part is pushed upward and can be removed from the die.

the desired shape, instead of simply being stretched. There is no vacuum or air pressure on the sheet. Sheet temperature, the hot strength of the plastic involved, and spring (or air) clamping pressure against the sheet are critical factors to ensure that the sheet material flows without stretching or being scored. Fig. 4D6 illustrates this method.

D7. ***matched mold forming*** - uses mating forming dies between which the heated and softened sheet is placed. The forming dies are mounted in a conventional press. When the dies close, the sheet is pressed into the desired shape and when it further cools (aided by the cooler mold) the dies are opened and the formed part is removed. There is no air pressure or vacuum. Vent holes allow any trapped air to escape. Fig. 4D7 illustrates this method which is comparable to that used for forming sheet metal parts except that dies can be made from various metals and, sometimes, of non-metallic

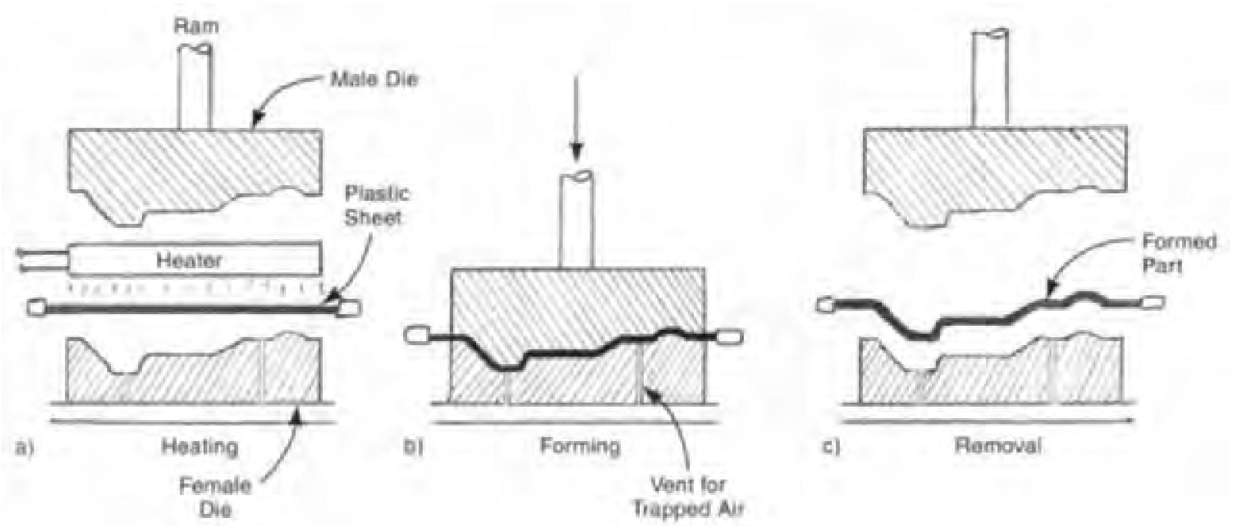

Fig. 4D7 Matched mold forming. a) The plastic sheet is placed between the die halves and heated. The heater is then retracted. b) The upper die descends, pressing the softened sheet between the die halves. The sheet cools and solidifies. c) The die opens and the formed sheet can be removed.

materials, instead of hardened steel. The die halves are kept in close alignment by the press or a die set unless the form is such that one die half can be made from rubber or another soft material that can be used to press the sheet against the other die half. The shape of the rubber die then needs only to approximate the shape of the part. Matched mold forming can produce special surface effects, lettering and other fine detail, and accurate forms. It is also used when the plastic sheet, at its forming temperature, is too fragile to be stretched into complex shapes. The sheet is then formed at a lower temperature using matched tooling. The process is used extensively for forming low-density foam containers such as meat trays, egg cartons, and for substructures in vehicles. (Also see paragraph G9 which refers to the forming of fiber reinforced plastic sheets.)

D8. ***pressure-bubble plug-assist forming*** (also called ***reverse-draw plug-assist forming, pressure-bubble plug-assist forming, billow-up plug-assist forming*** or ***reverse-draw with plug assist***) - In this process, the sheet is clamped, heated, and sealed against the top of the female mold cavity. Air is introduced into the cavity, blowing the sheet upward to a dome-like shape and stretching it evenly. A male plug, whose shape approximates that of the mold cavity but which is only about 85% as large, descends into the dome-shaped sheet. The plug is preheated to a temperature slightly less than that of the sheet. When the plug achieves its full descent, the space below the sheet is connected to a vacuum, drawing the sheet against the female mold cavity. Sometimes the space above the sheet is also pressurized. An advantage of the process is that wall thickness can be quite uniform and well controlled. Fig. 4D8 illustrates the process which is useful for deeply-formed, large-area parts.

D9. ***pressure-bubble vacuum-snapback forming*** or ***billow-up vacuum snap-back forming*** - is quite similar to pressure-bubble plug-assist forming except that the plug is shaped exactly rather than approximately to the final part shape wanted, and the sheet is drawn against the plug instead of against the female cavity. The process sequence is as follows: The sheet is clamped, heated, and sealed against the top edges of the box-like cavity. Air is introduced to the cavity, blowing the sheet upward to a dome-like shape. A male plug of the shape wanted in the part descends into the dome-shaped sheet. As the descent continues, the pressure below the sheet is released and a vacuum above the sheet draws the sheet tightly against the plug where it cools and hardens. This process variation is useful when there is a textured finish on

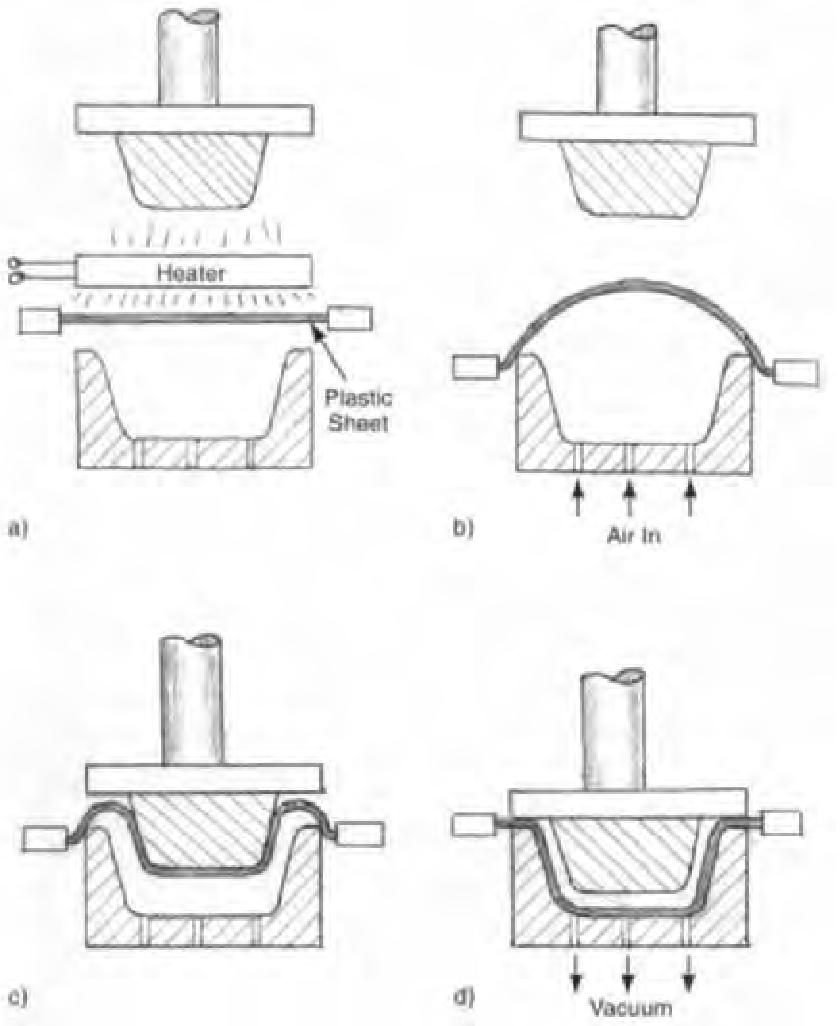

Fig. 4D8 Pressure bubble plug assist forming. a) The plastic sheet is placed above the mold and is heated. The plug above the sheet is also heated. The heater is then retracted. b) Air pressure from below causes the sheet to form a bubble, uniformly stretching the sheet. c) The plug descends against the bubble, bringing the sheet into close proximity to the female mold. d) A vacuum from below the mold draws the sheet against the mold where it cools and solidifies. The mold and plug then open and the formed workpiece is removed, similarly as illustrated in Fig. 4D4.

the sheet that must be incorporated in the outside of the formed part.

D10. ***trapped sheet, contact heat, pressure forming*** - This method is similar to straight vacuum or pressure forming except that the plastic sheet is heated by direct contact with a hot plate. The hot plate is porous so that air can be blown or drawn through it. The plastic sheet to be formed is placed between the mold cavity and a hot plate. The mold and hot plate are then brought together, trapping the plastic sheet between them and sealing the line of contact. A vacuum, applied above the hot plate, draws the plastic sheet to it, where it is heated. Air pressure may also be applied from the mold cavity to ensure close contact between the sheet and the hot plate. When the sheet is sufficiently heated, the air flow is reversed, creating pressure above the trapped sheet. The pressure forces it down against the mold cavity. Air trapped between the sheet and mold is vented, and a vacuum may be drawn below the mold to further force the sheet against the mold. When the sheet has cooled, the resulting formed part can be removed or ejected. Sometimes steel knives are used along the line where the sheet is trapped by the mold. Then, when extra force is applied, the knives trim the formed part to the desired outline. Contact heating is used extensively when the sheet thickness is about 0.010 in (0.25 mm). The primary application is as one operation in a continuous process called, *form, fill, and seal or FFS*. Rigid or semi-rigid containers are formed, filled with either solids or liquids, and then sealed, in a continuous operation. FFS is used extensively in pharmaceuticals for unit dose drugs and in food packaging for single-servings of cheeses or juices.

D11. ***air-slip forming*** - is a variation of snap-back forming. A sheet is clamped, heated, and sealed to the top of a forming box. Pressure is applied below the sheet and the sheet billows up. At the same time, the male mold in the forming box moves upward. (Gaskets at the sides of the mold form a sliding seal at the chamber wall.) Air pressure keeps the sheet from contacting the male mold. When the mold is fully in the up position, the pressure below the sheet is vented and pressure is applied above the sheet to force it against the male mold, where it cools and hardens.

D12. ***free forming (free blowing)*** - This method uses no mold but is useful for forming dome-shaped parts. The sheet is clamped, heated, and blown with air pressure or drawn with vacuum to the desired degree. There is no contact with any forming elements, except at the edges where the sheet is clamped. Acrylic sheet parts whose application needs optical clarity comprise the prime application.

D13. ***dual sheet forming (twin sheet forming)*** - is a method for producing hollow objects from two plastic sheets. Fig. 4D13 illustrates one method for achieving such a result. Two sheets are fed to the machine together, slightly spaced apart. Both are clamped and heated and moved between two halves of a mold. The process requires longer heating time than that required for a single sheet. This is sometimes compensated for by using a rotary table system that includes two heating stations so that each sheet goes through two heating cycles before it is formed. After the sheets are placed for forming, an inflation pin enters the space between them and the mold closes. Air pressure is introduced between the sheets and vacuums are drawn from the two opposing mold cavities. Pressure on one side and vacuum on the other causes the sheets to press against the walls of the two mold cavities. The pressure of the mold closure also bonds the softened plastic sheets together. The formed sheets and the joint between them cool and harden. The inflation pin is withdrawn, the mold opens, and a hollow part is ejected or removed.

Sometimes, the bottom sheet is formed first and an insert is placed on it before the other half of the part is formed and assembled. Another variation of the process introduces urethane foam instead of air pressure between the sheets. The foam adheres to both sheets, to make a strong sandwich construction. Foam-filled boat hulls are produced with this method.

Dual sheet forming is used extensively in Europe to produce such items as phone booth roofs and gaming table tops from PVC or ABS sheet. Shipping pallets and other dunnage products are produced from high-density polyethylene heated to above its melt temperature.

D14. ***solid phase pressure forming*** - is a technique used with several thermoforming processes rather than a particular forming method. It was first used in the thermoforming of thin gauge sheet polypropylene homopolymer. Some sheets tended to split when thermoformed at the temperature that would normally be indicated for the operation. Instead, an approach using a slightly lower temperature for the material was developed. The temperature was such that the material would, technically, still be in the solid phase. Higher forming pressures were used. This approach is still in use although new copolymer polypropylene formulations are thermoformable at higher temperatures. The technique is applicable to various crystalline plastics as well as polypropylene. Because of the reduced formability at the temperatures used, an increased pressure of 50 to 100 psi (345 to 690 kPa) is required. Vacuum forming does not provide sufficient pressure. Careful monitoring and control of the heating process is also necessary. The major

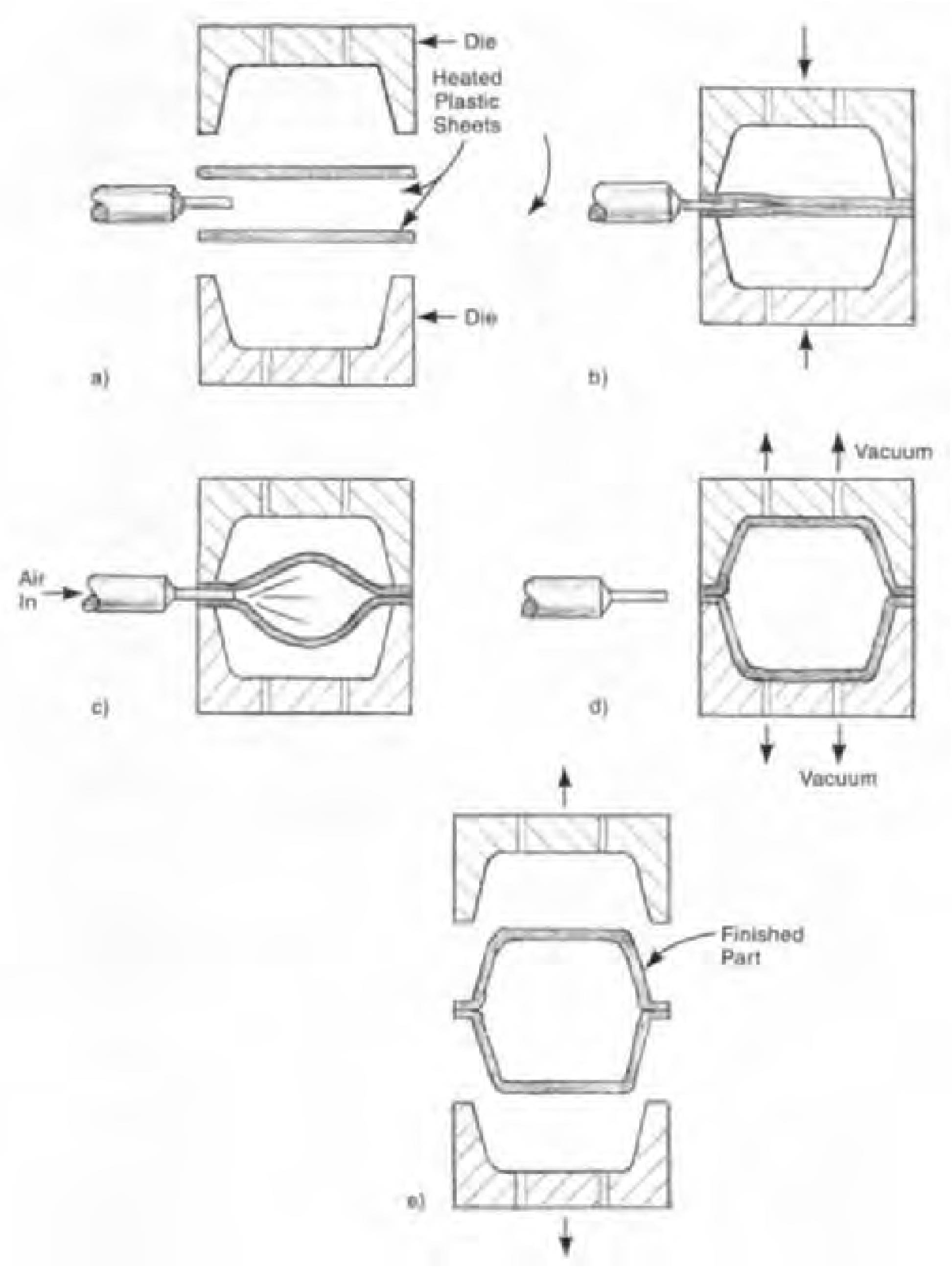

Fig. 4D13 Dual sheet (twin sheet) forming: a) Two heated plastic sheets are placed between the halves of the die. A thin air-inflation tube is also positioned between the die halves. b) The die closes, clamping the heated sheets and the inflation tube. c) Compressed air is pumped into the space between the sheets, driving the sheets against the die cavities. d) Vacuums draw the sheets tightly against the die walls. The air-inflation tube is withdrawn. Pressure of the die halves seals the two sheets together. e) The formed sheets cool, creating a sealed hollow component. The dies open and the finished part is removed.

application is the forming of smaller food cups such as those used for single portion servings.

E. Rotational Molding

Rotational molding, sometimes called, rotational casting, is a means for producing components that are thin-walled, hollow, seamless, and often large. It utilizes the two-axis rotation of a heated, clamshell-like, thin-walled, metal mold. A measured amount of liquid or powdered thermoplastic resin is charged to the mold. The mold is heated as it rotates in two planes. The resin continuously falls by gravity to the lowest point, and the heated mold walls become coated with the resin, which fuses together. The mold is then subjected to cooling by water, cold air, or a sprayed water-air mixture. This cools the plastic, causing it to solidify. The mold is then opened and the hollow part is removed. The equipment commonly provides three stations for the mold: 1) a loading-unloading station where the mold does not rotate, 2) a heating station where the mold has entered a hot-air oven, and 3) a cooling station. The mold is mounted on an arm, which carries it sequentially to these three stations. However, many other machine configurations are in use, including those with straight line and batch-type arrangements. Large containers, tanks, and outdoor play equipment, are made from polyethylene powder by this method. Gaskets, syringe bulbs, beach balls, hollow doll parts and other toys, are other typical applications and are made from liquid polyvinyl chloride (PVC)(vinyl plastisol). Fig. 4E illustrates the process.

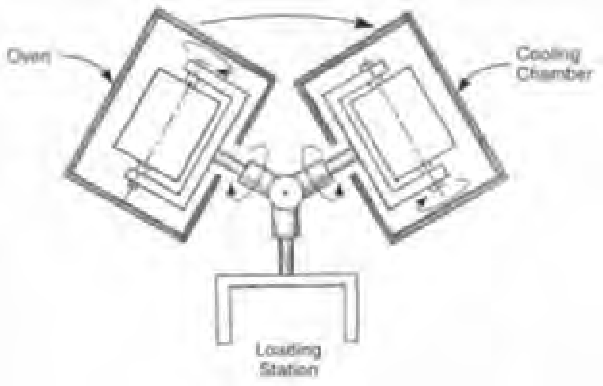

Fig. 4E Three-station equipment layout for rotational molding.

F. Blow Molding

Blow molding is a high-production method for making thin-walled, hollow, one-piece, objects of thermoplastics. Air pressure applied inside a small hollow and heated plastic piece (called a parison), expands it like a balloon and forces it against the walls of a mold cavity, whose shape it assumes. There it cools and hardens. The mold opens and the part is ejected. Flash, if any, is trimmed off and recycled. Normally, all these operations, including the forming of the parison, are part of an automatic sequence.

F1. ***extrusion blow molding*** - In this process, the parison is extruded as a tube with essentially the same method as is used for other plastic extrusions. The tube is then inserted in a blow-molding die with one end engaging a blow pin or needle. As the die is closed, the tube is pinched at both ends. The pinched-off tube is expanded by air pressure against the cooled walls of the die. The pressure is held for a brief period while the part cools and the material hardens. After the die opens and the part is ejected, the surplus material adjacent to the pinched-off areas is removed. All these operations are automatic. Fig. 4F1 illustrates the process which is used for about 75% of current blow-molded products. These include all kinds of containers, especially of larger blow moldings, for a variety of industries. Typical products besides containers are components such as automobile tanks, bumpers, seat backs and center consoles, housings, enclosures, toys, balls, and plastic duct sections.

F2. ***injection blow molding*** - The operation for injection blow molding is similar to extrusion blow molding except that the parison is made by injection molding instead of by extrusion. The parison is molded over a mandrel to provide the hollow shape, and this mandrel transfers the hot parison to the blow-molding die, and then functions as the blow nozzle. Air entering the blow nozzle expands the parison against the cool walls of the blow mold. Trimming of the molded part is normally not required. In the usual arrangement, a three-station, horizontal, indexing table is an

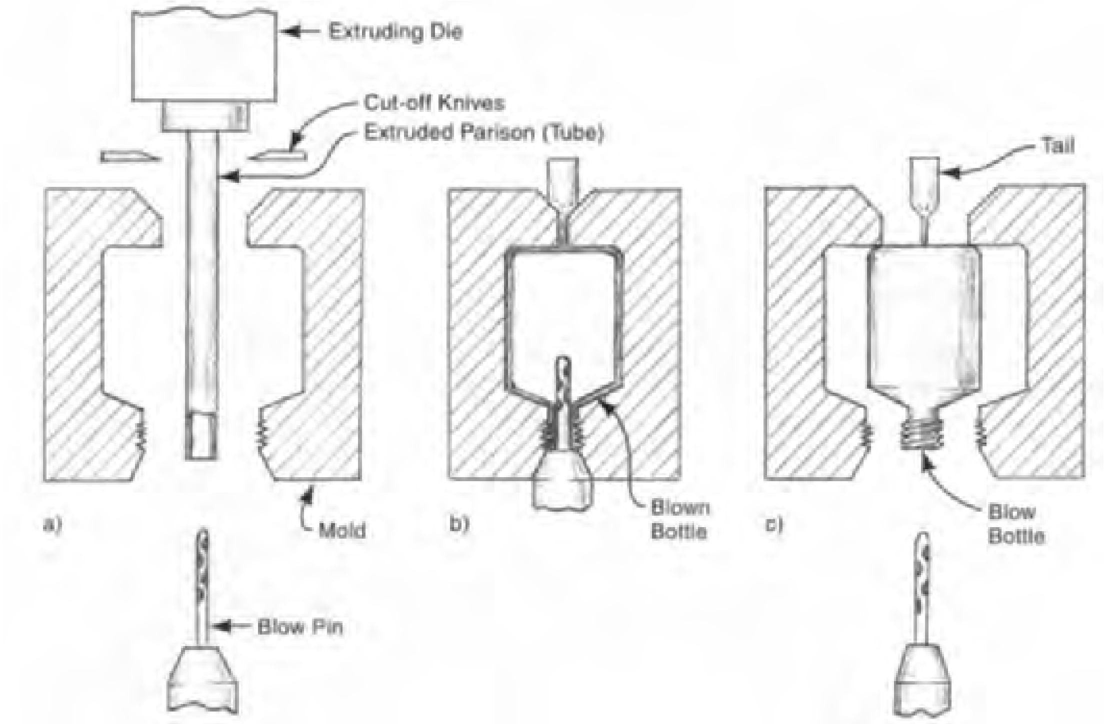

Fig. 4F1 Extrusion blow molding. a) The die is open and the parison tube is extruded between mold halves. b) The tube is cut off as the mold closes and a blow pin is inserted in the other end of the tube. The tube is pinched off at the top (bottom of bottle). The tube is expanded by air pressure to line the interior surface of the mold, forming a bottle. c) The bottle cools and the plastic solidifies. The blow pin retracts and the mold opens.

essential part of the equipment. The injection molding of the parison takes place at one station, inflation of the parison at the second station, and ejection of the finished part at the third station. (Some machines have a fourth station for pre-inflation of the part, or for a post-molding operation such as label attachment.) The process is adaptable to hollow parts that have some special shaped portion. The neck and opening of bottles, including screw threads for the cap, are produced in the injection mold as part of the parison. They can be made to closer dimensional tolerances than with extrusion blow molding and the wall thickness can be set as needed and more accurately controlled. The injection blow molding process is used extensively for smaller bottles of household products. It is illustrated in Fig. 4F2.

F3. ***In stretch blow molding*** - a center rod stretches the parison to about two times its length. This axial stretching, plus the circumferential stretching action of the inflation, produces a biaxial orientation of the molecules in the walls of the part, improving the strength, barrier properties, and clarity of the walls. The process has some complexities. The temperature of the workpiece during the stretching operation is critical, and that temperature must be essentially uniform throughout the wall of the part; the inflation air pressure must be somewhat high in order to achieve the benefits of stretching. There are two basic stretch blowing methods: the continuous or single-stage process in which the temperature conditioning and stretching take place immediately after the parison is molded, and the two-stage process in which temperature conditioning and stretching take place later.

The single-stage method involves the following steps: 1) injection molding of the parison 2) temperature conditioning, in which the parison is

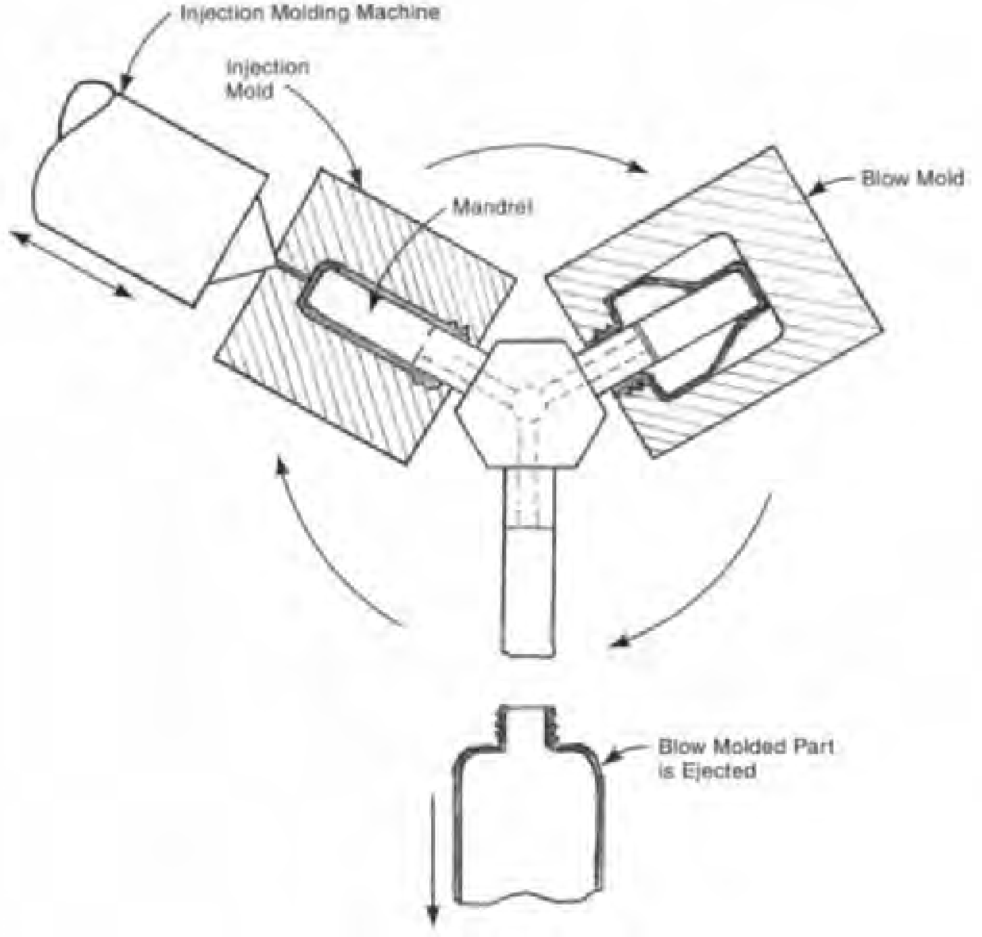

Fig. 4F2 Injection blow molding with a three-station index table arrangement.

brought to the best temperature for stretching, with uniformity throughout, 3) stretching and inflation in the mold and, 4) cooling and ejection of the finished part. Though the single stage process has some simplicity, it is not as rapid, overall, since the individual operations do not require the same amount of time. The two-stage method requires the parisons to be reheated, but the slower operations can be done in multiples to balance the flow. The two-stage approach, though more capital intensive, is most appropriate for the mass production levels required for most applications. Plastic soft drink bottles constitute the major application. Small bottles for pills and vitamins is another important use. PET, used for soft drink bottles, is the prime material, though other applications often involve different thermoplastics.

F4. ***multilayer blow molding*** - is a blow-molding operation that utilizes co-extrusion (see 4I2) - or co-injection-molding (see 4C3e) - to provide two or more layers in the parisons and in the final blow molded products. ***Coinjection blow molding*** and ***coextrusion blow molding*** are terms also applied to this approach. These processes are used in the production of containers when it is important to provide barriers against permeation and odor escape, and when the container is to be used for solvents, gasoline, herbicides, cosmetics, or pharmaceuticals. Stretching operations, as described above, are also common in the production of multiple-layer blow-molded bottles.

F5. ***dip blow molding*** - uses plastic resin adhering to a core rod, instead of an injected or extruded piece, as a parison. The core rod, whose diameter is the same as the inside diameter of the finished part's neck opening, is inserted through a narrow opening into a chamber holding molten plastic. The core rod is then withdrawn while, at the same time, a piston advances into the chamber from the opposite end, maintaining pressure in the chamber and insuring that material remains on the rod. The core rod, when withdrawn, then has a coating of hot plastic. The coated rod is transferred to the blow molding station where air is blown through it. The air expands the plastic coating into contact with the mold cavity walls. The product is then cooled and hardens into a hollow part.

F6. ***other blow molding processes*** - Labels are sometimes placed in the mold before the inflation phase to provide better adhesion and protection of the label. In high-production situations, when labels are inserted, automatic equipment picks up each label by vacuum and positions it in the blow-mold cavity. A vacuum source, drawing air through small perforations in the mold cavity, holds the label in place as the parison is inflated in the mold. This method provides very good label adhesion because the plastic material it contacts is almost in the molten state.

Some extrusion blow-molding dies are equipped with de-flashing jaws inside the mold to grab and tear off the bottom flash as the finished bottle is ejected.

G. Processes for Reinforced Thermosetting Plastics

This section deals with composites of reinforcing materials such as glass or carbon, and a matrix of thermosetting plastic such as polyester or epoxy. Other reinforcements can be used with other polymers but this section refers to processes where the reinforcement and thermosetting materials predominate. The reinforcing fibers in the composite material provide much greater strength and rigidity than is possible with unreinforced plastics. Several processes have been developed to manufacture useful components and products from these reinforced materials.

G1. ***hand lay-up*** - In this method, an open (one piece) mold is used. Its cavity surface is coated with wax or another release agent. Normally, a "gel coat" of the resin, which is a layer of resin without reinforcing fibers, is first applied to the mold with a spray gun, and allowed to set. This is in order to ensure that the reinforcement will not show through the surface of the molded part and to ensure that the surface will be smooth. Fiberglass or other reinforcement in the form of a mat of unwoven fibers or a fabric, or both mat and fabric, is then placed manually in the mold. Liquid thermosetting resin is poured, brushed, or sprayed onto the reinforcing material and is spread to a uniform distribution with hand rollers or by other methods. (The mat or fabric may also be pre-impregnated with resin.)

It is important to ensure that the reinforcing fibers are properly wetted by the resin and that the materials are compacted into a solid mass. Often, several layers of resin and reinforcing material are applied. Normally, the plastic is catalyzed to cure at room temperature. When the plastic has polymerized, the part is solid and can be removed from the mold. Trimming is usually required at the edges and is performed with hand trimming tools. Depending on which surface must have the superior finish, the mold will be of female or male shape (female shapes are used for fiberglass boats, machine covers, or housings). The mold itself may be made from fiberglass reinforced plastics, but wood, sheet metal, plaster, and other inexpensive materials may be used. The process is adapted to large parts, especially those made in small quantities. Truck wind deflectors, aircraft parts, and vehicle panels are typical components made with the process. Fig. 4G1 illustrates hand lay-up. Robotic and

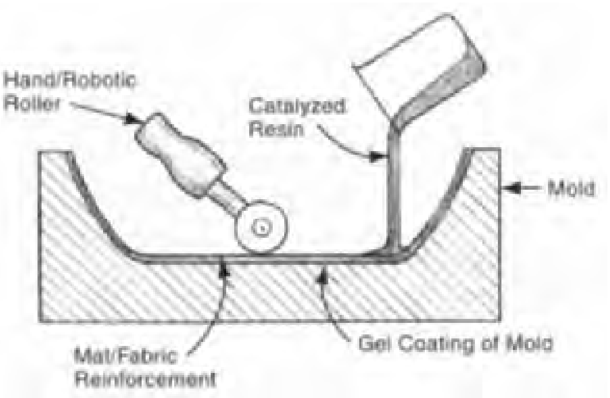

Fig. 4G1 Hand lay-up of a reinforced thermosetting plastic part.

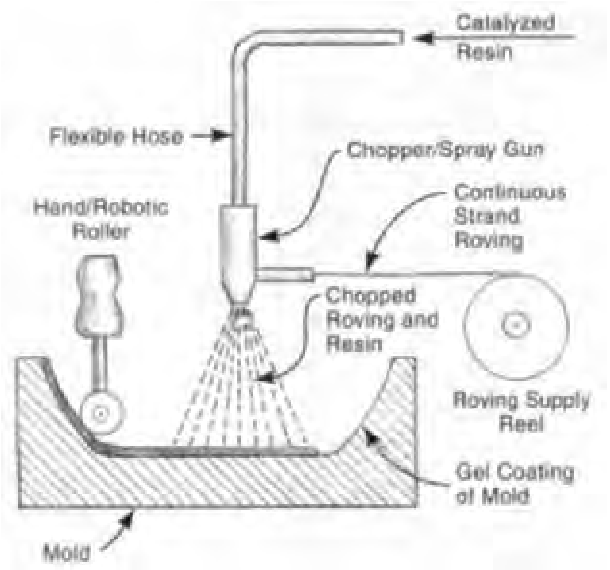

Fig. 4G2 Spray-up molding of a reinforced thermosetting plastic part.

other mechanical assistance is increasingly being employed to reduce the labor required to apply the reinforcements and resin and to properly distribute the resin.

G2. ***spray-up*** - In this method, illustrated in Fig. 4G2, an open mold is used, as with hand lay-up. The resin and reinforcing material are sprayed together into the mold from a gun that chops the reinforcing fibers into short lengths and mixes them with the catalyzed resin. The mixture then must be rolled to ensure that there is a dense, fully-wetted mat of reinforcement material. The process is used to make plastic shower stalls, bathtubs, and other products at higher production rates than are possible by hand lay-up. The method is less labor intensive than hand lay-up. Robotically-controlled guns and rollers are used for some components. The adverse effect of overspray on air quality in the workplace is a factor that must be dealt with when this method is used. As with hand lay-up, room temperature curing is usually used, though ovens or other supplementary heating is sometimes employed. A gel coat is commonly applied to the mold before the spray-up commences.

G3. ***vacuum-bag molding*** - is an augmentation of lay-up or spray-up molding. It involves the placement of a plastic film on top of the laminate in the open mold, sealing the edges, and then using a vacuum from the bottom of the mold to draw the film tightly against the laminate. Atmospheric pressure then helps provide a smoother interior surface and tends to close any voids that exist.

G4. ***pressure-bag molding*** - is another augmentation for lay-up or spray-up molding. In this case, a bag above the plastic film on top of the laminate is clamped to the mold and inflated, providing pressure to force the film tightly against the laminate. Pressures normally used are 30 to 50 psi (210 to 345 KPa). Venting of the mold allows any excessive air in the laminate to escape.

G5. ***autoclave molding*** - is a third means of providing pressure to smooth the surface of the laminate and close any voids that exist. Film is laid on top of the laminate in the open mold and the filled mold is placed in an autoclave. Pressure inside the autoclave to about 80 psi (560 kPa), forces the film against the laminate. This pressure is higher than can be achieved with an inflated bag, and provides even stronger smoothing and compression of the laminate. The autoclave is normally heated to accelerate the cure of the thermosetting plastic in the laminate and permit the use of resins that require elevated temperatures for curing. This approach is used in the aerospace industry, where quality requirements for reinforced plastic parts are highly critical.

G6. ***centrifugal casting*** - is a process used in the production of fiber-reinforced plastic piping, cylindrical containers, and tanks. The operation takes place inside a hollow, cylindrical mold. A reinforcing mat is placed inside the mold to cover the full inner surface. Then, resin is sprayed on the mat material as the mold is rotated slowly. (An alternative method is to spray a mixture of chopped reinforcing fibers and resin as is done with conventional spray-up molding.) When the required amount of reinforcing mat and resin are in place, the speed of rotation of the mold is increased. The resulting centrifugal force, then ensures that the fibers are fully wetted and that the resin-fiber mix is sufficiently dense. The mold may be heated to accelerate the curing of the resin.

G7. ***filament winding*** - is a reinforced-plastics process that uses continuous lengths of reinforcing fiber instead of chopped strands, mats, or fabric. The continuous lengths provide superior strength. The filaments are wound, along with a thermosetting plastic resin, over a mandrel that has the diameter of the part to be produced. The process was originally used in the fabrication of pressure or storage containers where the extra strength was particularly important. It has been developed to be applied to other shapes, including non-round cross sections. Helicopter rotors and windmill blades are examples. Other products include pipes, tanks, lighting poles, rocket components, drive shafts, aircraft fuselage sections, ski poles, golf poles, and tennis rackets. The resin can be applied to the filament before or during the winding operation and, occasionally, after winding. Most commonly, the filament is either precoated or passed through a resin bath during winding. The winding direction can be circumferential, helical, polar, or some combination of these, depending on which direction is most important from the strength standpoint of the finished component. Cris-cross patterns, and others that provide strength in multiple directions, are common. Mandrels can be inflatable, or mechanically collapsible if the end shape of the workpiece requires a size reduction of the mandrel so that it can be removed. Fig. 4G7 illustrates the process. Polyester and epoxy are the most common resins used. Glass fibers are most common but carbon, aramid and other fiber materials are also employed.

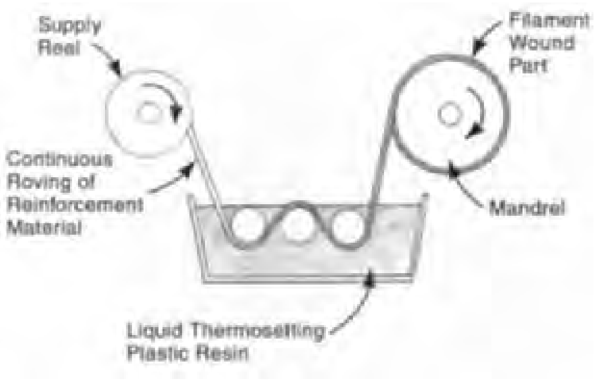

Fig. 4G7 Filament winding is useful for making tanks, pipes, and various round and non-round hollow parts of reinforced plastics.

G8. ***continuous laminating*** - is an operation in which sheets of reinforced plastics are produced. The term applies whether the operation is performed with thermoplastics or thermosets. If it involves a thermoplastic, the operation is usually is a preparatory one; the sheet produced is intended for later forming. When thermosetting plastics are used, the purpose of the operation may be either preparatory, to produce a sheet molding compound for later molding, or final, to produce a rigid sheet to be is used for such applications as skylights, building walls, greenhouse glazing or printed electronic-circuit boards. Note: Also see I4 below, *extrusion coating and laminating.*

G8a. ***continuous laminating with a thermosetting plastic*** - in this process, shown in Fig. 4G8a, reinforcing fibers, usually chopped lengths of glass fiber, are placed to cover a plastic film carrier which lies on the surface of a belt conveyor. A liquid resin, most commonly polyester, is applied to the reinforcing material. The resins used usually incorporate several additives: colorants, UV stabilizers, flame retardants, and fillers. A top film is applied. The resin-fiber mix on the film is conveyed to a pressure roller that bears against it, kneading it and ensuring that the fibers are fully wetted. Additional rollers remove any trapped air and control the thickness of the laminate. If the laminate is to be used for later forming (see matched metal mold forming below), it is coiled or cut to length at this point. If the laminate is to be made into rigid sheet, it is conveyed to a curing area where the resin cross-links, producing a solid sheet. There may be other rollers that put corrugations in the sheet before the resin is cured. After curing, the plastic films are stripped from the top and bottom of the laminate, edges are trimmed, and pieces are cut to length.

G8b. ***continuous laminating with a thermoplastic*** - Polypropylene or another thermoplastic, in sheet, extrudate, or even powder form, is fed both above and below a fabric or mat of reinforcing material into a double-belt machine. A layer of metal foil may also be included. The belts bear against the top and bottom of the material and supply

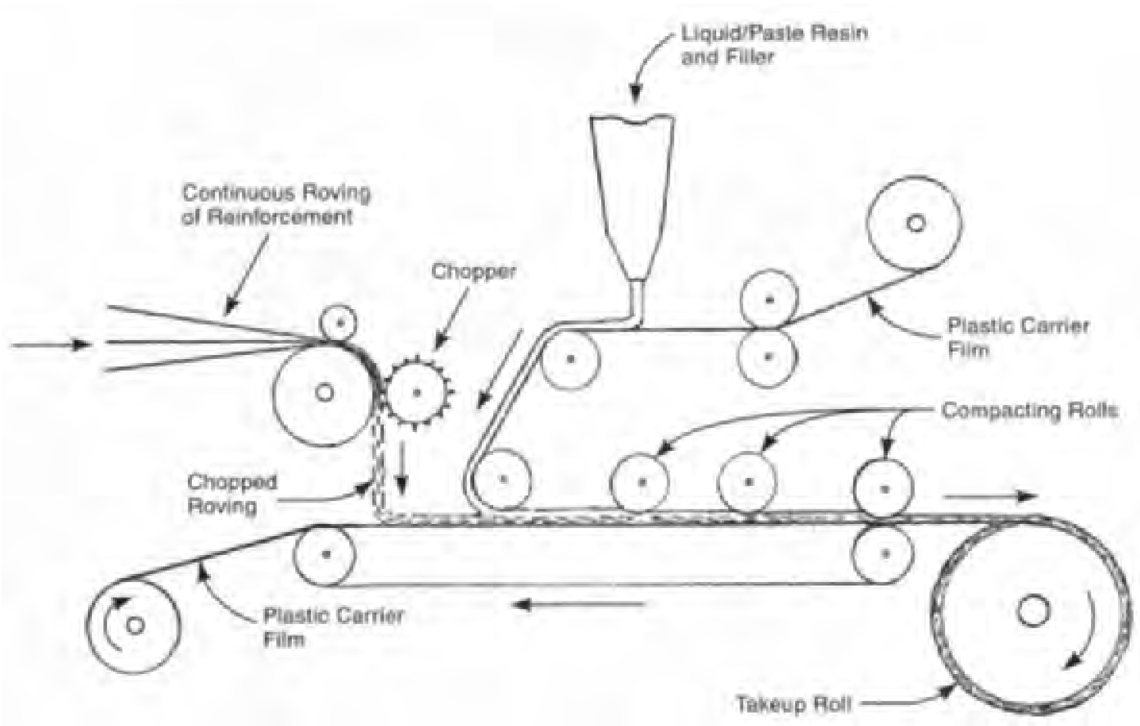

Fig. 4G8a Making a continuous laminate of reinforced thermosetting plastic for later molding. Edge trimming and cutting to length usually follow the operation shown.

heat, which softens the thermoplastic, causing it to flow around the reinforcing material. As the material proceeds along between the belts, it enters a cooling zone where the plastic re-solidifies. Edges may be trimmed, and the resulting sheet material may be either coiled or sheared into sheets. The laminated material that is produced is suitable for a variety of forming operations, the most common one being the matched metal-mold forming operation described below.

G9. ***matched metal mold forming (cold stamping)*** - is the same as the matched mold forming method described in paragraph D7 except that it applies to fiber-reinforced thermoplastic sheets (which are sometimes called, STC for "stampable thermoplastic composites"). The term, "stamping" is used because the softness of the heated composite sheet permits a quite-rapid die closure motion. The process, for which the illustration in Fig. 4D7 is also applicable, is used to make automotive components, where the combination of resilience (from the thermoplastics), and strength (from the reinforcing fiber), is important. Bumper bars, engine covers, and battery trays are common applications.

G10. ***matched metal mold forming of reinforced thermosetting material*** - Sheet molding compound (SMC), a combination of thermosetting plastic and reinforcing mat or fabric, is often formed into useful components by a compression molding process. The process is used to form machine housings, garden and farm equipment parts, trays, and other parts that can be formed from flat sheet. The sheet is placed in the heated mold, which consists of two accurately-machined halves. The top half descends, pressing the sheet between the two halves, where the heat from the molds cures and hardens the thermosetting plastic matrix. For applications requiring a smooth surface that does not show the reinforcing fibers, an in-mold additional resin coating may be applied. Fig. 4G10 illustrates the process.

G11. ***pultrusion*** - is a process used for making parts of reinforced plastics that have constant cross sections of any length. Such sections are similar in

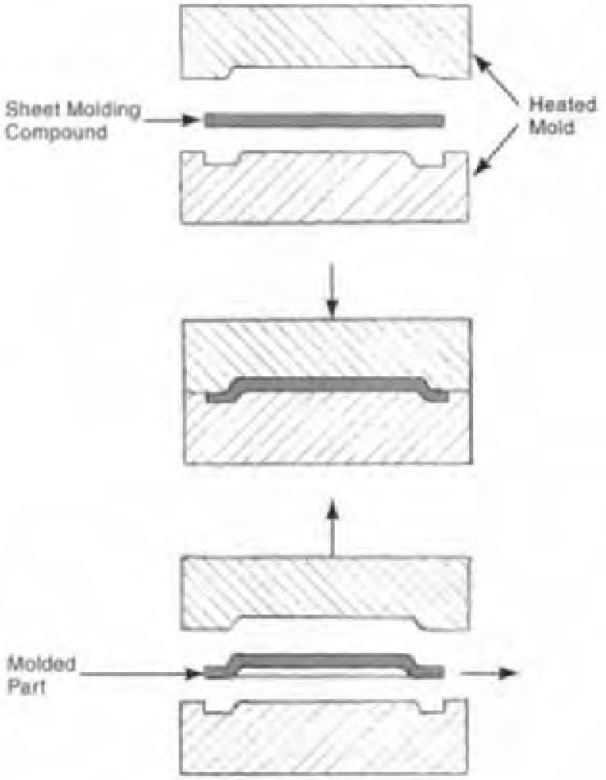

Fig. 4G10 Matched metal mold forming of reinforced thermosetting sheet molding compound (SMC).

shape to profile extrusions, but contain reinforcing fibers, which are arranged to lie in an axial direction in the part. Bundles of long reinforcements, usually glass fibers, are guided through a bath of liquid resin (normally thermosetting) so that each fiber is fully wetted. These reinforcements are then guided together and preformed into the approximate profile desired. This preform is then pulled through a heated die of the exact profile desired. The heat of the die changes the thermosetting material from liquid to a soft semi-solid, and then into a cured rigid plastic. A part with full fiber reinforcement is created. The term, pultrusion, results from the fact that the material is pulled through the die rather than pushed, as is done with conventional profile extrusions. See Fig. 4G11. After the pultrusion, parts are cut to the length desired, typically by cutoff saw. Pultrusions are used in applications requiring light weight, corrosion resistance, electrical insulation, and strength. Commonly pultruded shapes are I-beams, channels, angles, bars, and rods. Ladder parts, fishing poles, ski poles, and golf club shafts are among common applications.

G12. ***pulforming*** - is similar to pultrusion (see Fig. 4G11) except that it produces parts of non-uniform cross section. Tool handles and plastic leaf springs are two common products produced.

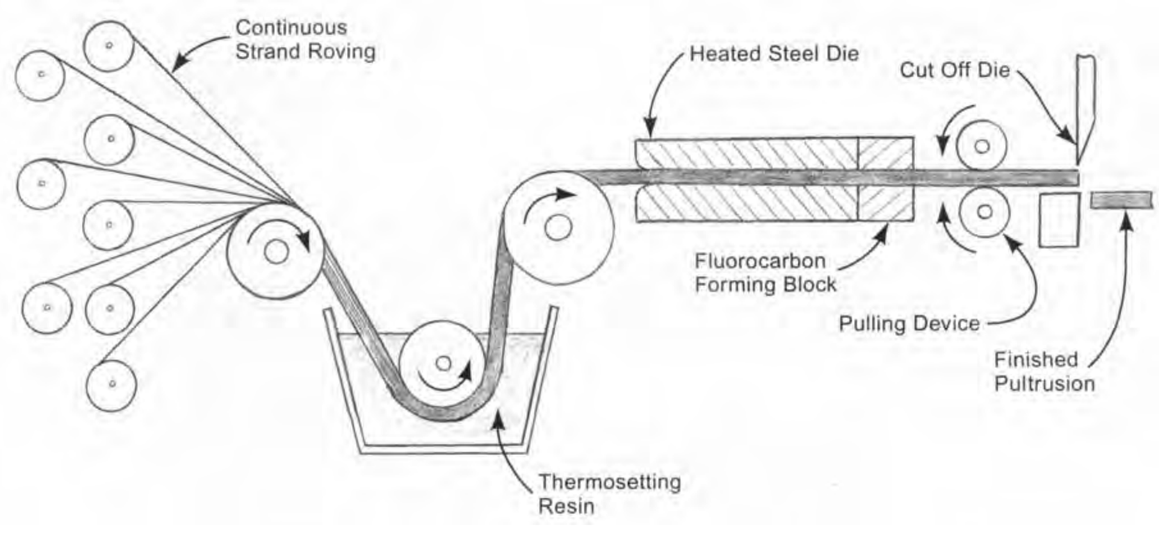

Fig. 4G11 Pultrusion shown schematically.

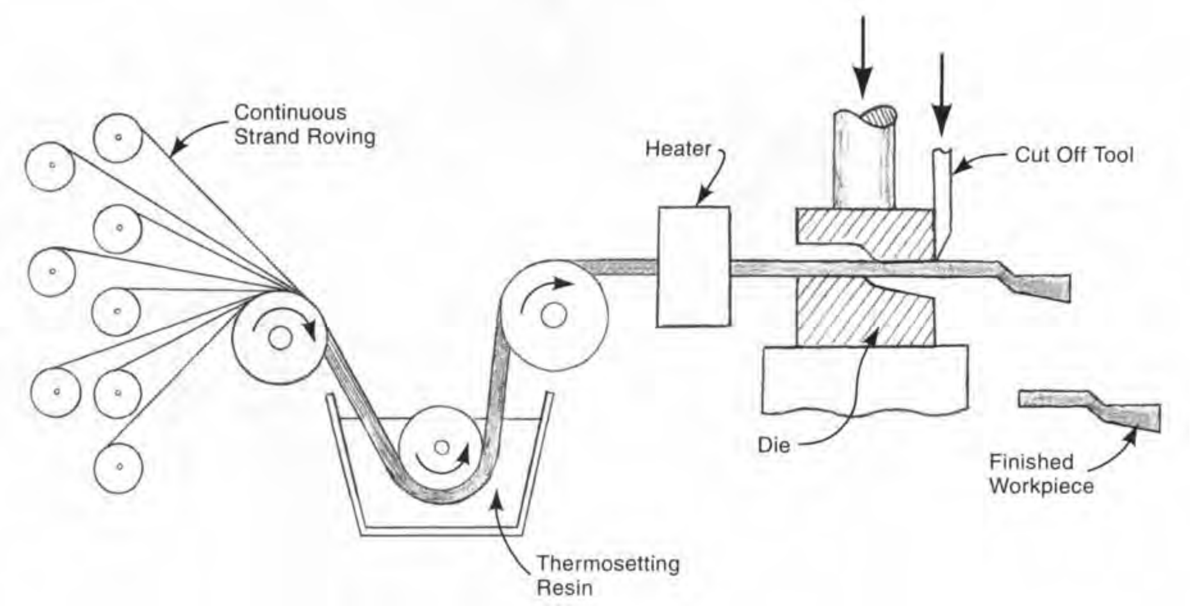

Fig. 4G12 Pulforming shown schematically. Before the die closes, additional uncured material may be added to accommodate the shape of the part, which can be tapered or otherwise non-uniform in cross section.

Instead of pulling the preformed material through an extrusion-like die to create a constant cross section, it is placed in a mold. Additional material may be added where needed. The heated mold is closed, curing the resin-reinforcement mix to the desired shape. Although the process does not produce constant cross sectional shapes, parts produced often have only minor changes in shape along their length. Fig. 4G12 presents an example of the process.

G13. ***resin transfer molding (RTM) (liquid resin molding)*** - In this process, reinforcing material, in mat or woven form, is placed in an open two-piece mold. The mold is then closed and low-viscosity liquid thermosetting material from two metering pumps - one for the resin and the other for the catalyst - is fed into a motionless mixing device and then into the mold. The material cures in the mold. Injection pressures are low, from 5 to 50 psi (35 to 345 kPa), so fragile inserts can be incorporated in the mold. There is only minimum mold wear. Inexpensive molds with shorter lead times can be employed. Typically, the mold gate is at the bottom and the mold fills with the liquid resin mixture from the bottom, as air bleeds from vent holes at the top of the mold. The material cures in the mold, either with the aid of heat or with a resin formulation that cures at room temperature. The mold then opens, allowing the solid part to be ejected. Both sides of the part can have the surface finish imparted by the mold, so there is not the rough finish on one side of spray-up or hand lay-up molding. The process is economic for medium-quantity production. Polyesters, epoxies, acrylics, vinylesters and phenolic resins are used. Reinforcements of glass, carbon, boron or Kevlar fibers can be incorporated. Gel coats can be sprayed on both mold halves before the reinforcement is placed. The process can be used for rather large parts including vehicle panels, bathroom and shower units, truck air deflectors, chairs, and antenna dishes. High-temperature aerospace parts are also made by this method. Fig. 4G13 shows the process.

G14. ***other processes for reinforced thermosetting plastics*** - Other processes include casting (See 4H), compression molding (4B), injection molding (4C), reaction injection molding (4C3b), extrusion (4I), and rotational molding (4E), that are used for unreinforced materials, can be used with reinforced thermosetting materials as well. Most of these processes are quite workable when the reinforcing fibers are short, so that the resin compound

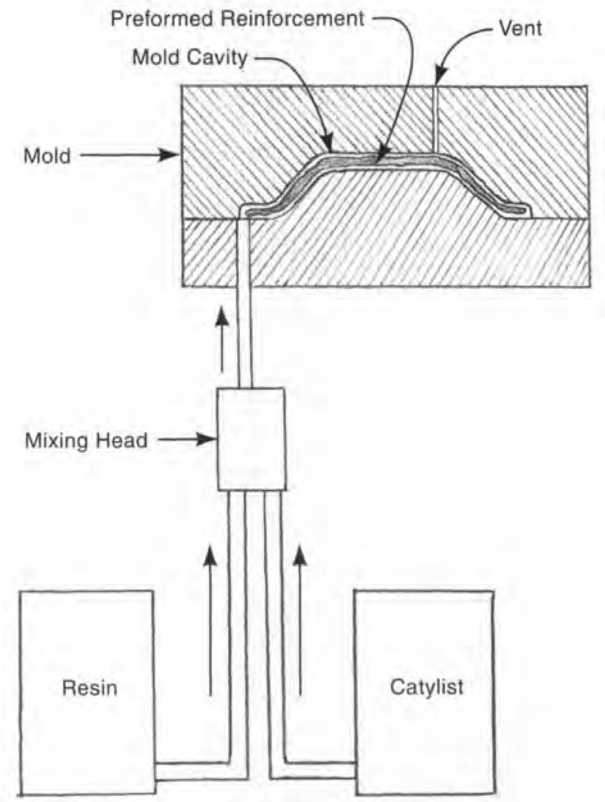

Fig. 4G13 Schematic illustration of the resin transfer molding (RTM) process.

can be worked in a manner similar to the way it would be worked without reinforcement. However, even short fibers can provide significant property enhancement to plastic parts.

H. Casting of Plastics

When plastics are cast, the resin, in liquid form, is poured into a mold cavity. The viscosity of the resin is low enough so that pressure is not required to fill the mold cavity. However, a vacuum may be applied to the liquid in the mold, in some cases, to remove trapped air or other gases. Manual mixing and casting are common, but automatic mixing, metering, and handling equipment may be utilized, if the production quantities warrant it. Thermosetting materials are the ones most commonly cast. They include epoxies, polyesters and silicones, including silicone rubber. They are cast as monomers and polymerization occurs in the mold, and heat may be applied to the mold to induce polymerization, depending on which thermosetting plastic is used. Some thermoplastics are also cast, but they also are dispensed into the mold as monomers and then are polymerized. Nylon, acrylic, and polyurethane are the thermoplastics most commonly cast as monomers. Vinyl dispersions are also cast. See sections K, K3, and K4.

Molds for casting plastics may be made of many materials since forces involved are very low. Lead and its alloys, aluminum, plaster, silicone rubber, and rubber latex are among the materials used to make molds. Casting is also used in the production of sheet materials.

H1. *casting of sheet*

H1a. ***cell casting of sheet*** - is a batch process for making sheet stock by the casting method. The major material is *acrylic* and the following description refers to the method used with that material. The molds or "cells" for casting acrylic sheet are made from polished plate glass, plus end and side members. The molds are filled with methyl methacrylate monomer mixed with some partly-polymerized resin in liquid form plus desired additives such as catalysts, ultra-violet absorbers, and colorants, etc. The filled mold is sealed and air is evacuated before it is moved to an oven. There, the mold is slowly heated to a temperature of about 200°F (93°C) for an extended period (up to 16 hours for 3/4 in thick sheets, longer for thicker sheets), during which time the monomer polymerizes. The mold is then cooled and opened, and the cast sheet is trimmed as necessary. Sheets of thicknesses from 0.125 to 4 in (3 to 100 mm) are cast by this method. Cell cast sheets are used for glazing, skylights, outdoor signs, and in plumbing and spa products. Opaque and colored sheets can be produced by the process, but its prime advantage is the superior optical properties the sheets possess compared to continuously-cast acrylic. Fig. 4H1a shows a typical mold arrangement used for cell casting.

H1b. ***continuous casting of sheet*** - uses a pair of moving, parallel, highly-polished, and endless, stainless steel belts, between which is poured or pumped an acrylic syrup similar, but not identical, to that used for cell casting of acrylic as described above. (The material mixture may be varied in

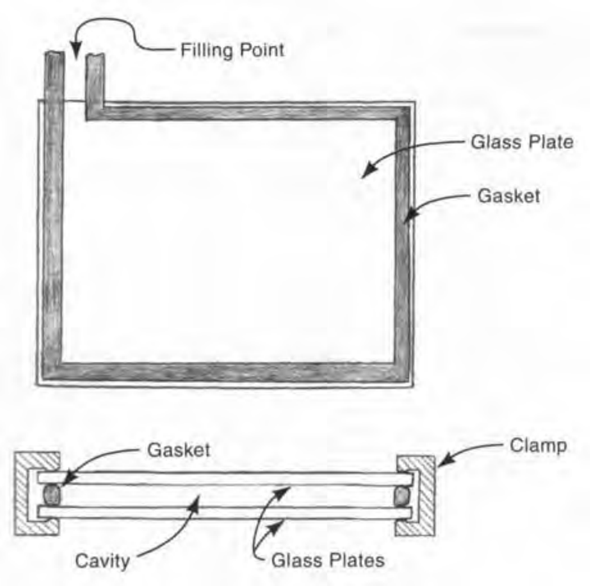

Fig. 4H1a Apparatus for cell casting of acrylic sheet.

order to provide the proper viscosity for the method used. The final sheet, though a thermoplastic, will contain some cross-linked material to improve chemical and stain resistance and thermo-formability.)

Flexible gaskets at the edges of the sheets prevent leakage. The stainless steel belts convey the material through a heating phase to induce polymerization, followed by a quick cooling phase to prevent bubbling of the material. Another heating phase up to about 260°F (125°C) is then used to complete the polymerization to the desired level. Then the solid product exits the belt system, the surfaces are covered with a protective film and sheets are cut to the length desired. Fig. 4H1b illustrates the process. The equipment required is rather large and expensive but output rates are high. Most acrylic sheet is produced by the continuous casting method. Sheet thicknesses can range from about 0.080 to 0.500 in (2 to 12.5 mm). Applications are the same as those for cell cast sheet except that optical properties are not as good as those from cell casting. Skylights, sign components, and glazing are all applications for continuous cast acrylic sheet.

H2. ***casting structural foam parts*** - is simply reaction injection molding (as discussed above in 4C3b) performed on a manual basis. Liquid components of thermosetting resins (usually polyurethane) are mixed and poured into a mold. Polymerization and foaming take place in the mold. Heated molds are

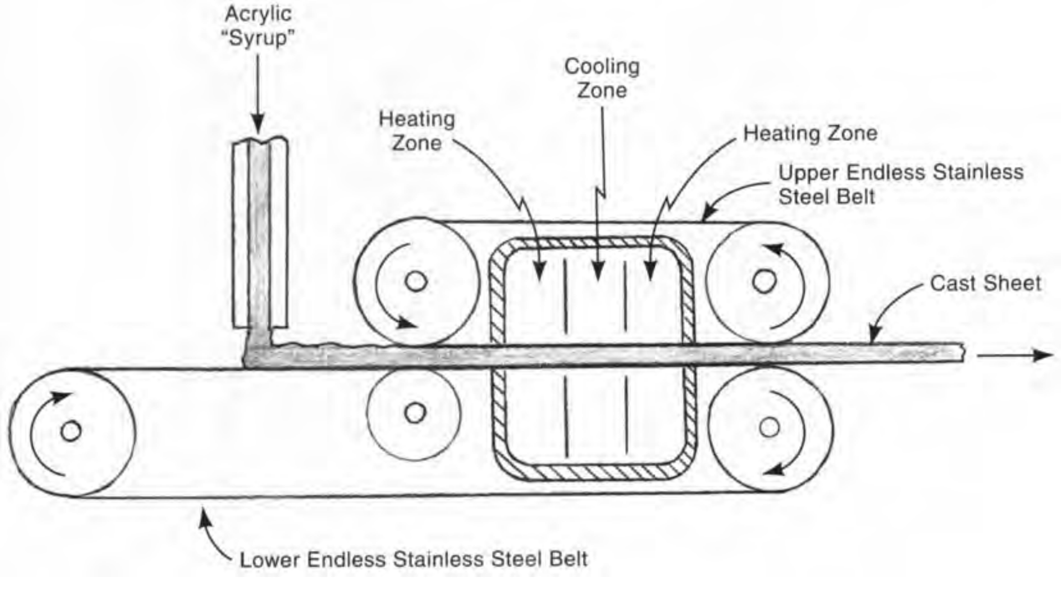

Fig. 4H1b Schematic view of equipment used for the continuous casting of acrylic sheet. The acrylic syrup is spread and compressed between two polished stainless steel belts, which carry it through a series of ovens that polymerize the acrylic by heating, cooling, and reheating to produce a solid cast sheet. (Note: For convenience of illustration, the heating and cooling zones are shown much shorter than those in actual production equipment.)

used to accelerate polymerization. Oven curing usually takes place after casting. This process is particularly applicable to prototypes and limited quantity production, and can be used effectively for large plastic parts.

H3. ***casting nylon parts*** - Cast nylon has superior machinability, stiffness and heat deflection properties than nylon 6/6 which is injection molded or extruded. The nylon casting process involves use of the monomer; polymerization takes place in the mold. The monomer must be heated and melted before casting, and must be protected against moisture absorption during the casting sequence since it is highly hygroscopic. Sealed containers and inert atmospheres may be used to prevent moisture from coming in contact with the material. Molds can be inexpensive since the forces they are subjected to are low. Aluminum, epoxy, and silicone rubber, as well as steel, have been used as mold materials. The casting operation often takes place in heated ovens. (The monomer material is heated to 390°F (200°C). For smaller parts, centrifugal casting may be employed, i.e., the molds are spun to provide sufficient force to fully fill the mold cavities. Cooling of finished parts is slow to permit relief of internal stresses from shrinkage (15%). Large parts (up to 400 lbs – 180 Kg) can be produced with the process. Gears, sheaves, cams, various machine parts, bushings, and bearings are common applications. The casting process lends itself well to low-quantity production levels.

H4. ***casting acrylic parts*** - The same kind of monomer-polymer mixture used in cell casting of acrylic sheets (See H1a above) can produce shaped parts if a suitable mold is used. The process is useful at low production quantities when the cost of an injection mold and molding machine cannot be justified. The optical clarity of acrylic makes it useful for embedding an object or biological specimen in a clear protective or decorative block. Embedded objects are pre-positioned in the mold before casting. Molds can be made of almost any material because the operation does not require elevated temperatures. Art statuary, and marble-like kitchen and bathroom counters and sinks are other applications. When marble-like objects are cast, the acrylic is mixed with up to 60% of inorganic filler which gives the appearance of marble.

H5. ***encapsulation and potting*** - various electronic and electrical devices are encapsulated with plastics to provide insulation, and mechanical and environmental protection. Potting involves partly surrounding a device with plastic to fix it in place in some component. Both encapsulation and potting involve casting, usually with thermosets. Epoxy potting of small transformers for electronic devices is a common example of potting. High voltage transformers are frequently potted with silicone rubber. As with regular casting, simple molds can be used. Often, immediately after casting, the filled mold is placed in a vacuum chamber so that any trapped gases or air will bubble out of the liquid casting resin before it sets. This procedure eliminates or minimizes voids in the cured material.

I. Plastics Extrusion

Extrusion is the process of forcing a heated, semi-solid plastic through a die whose cross-sectional shape it retains when it cools and solidifies. The operation is normally continuous. Thermoplastic material in granular form is fed from a hopper to the heated barrel of the extruder. A rotating screw transports the material through the barrel and mixes it as it melts, providing a uniform flow rate. The temperature of the material, as it reaches the extruding die, is uniform throughout. The die is essentially a plate with an opening of the shape desired in the cross section of the extrudate. The material exiting from the die is cooled by air blast, water spray, or water trough, so that it hardens, forming a product of constant cross section and indefinite length. Some further sizing operations may be performed after the material exits the extrusion die and before it fully cools. One method often employed is to pull the material by conveyor at a slightly faster rate than it leaves the extrusion machine. This reduces the size of the cross section and aids in keeping the extrusion straight. Fig. 4I illustrates a typical profile extruder.

I1. ***profile extrusion*** - The extrusion process is used to produce profiles of many different cross-sectional or profile shapes. Tubing, pipe, rods, sheet, fiber, and film can be extruded as well as many complex shapes. Coating of wire and cable is another common application. Typical profile shapes

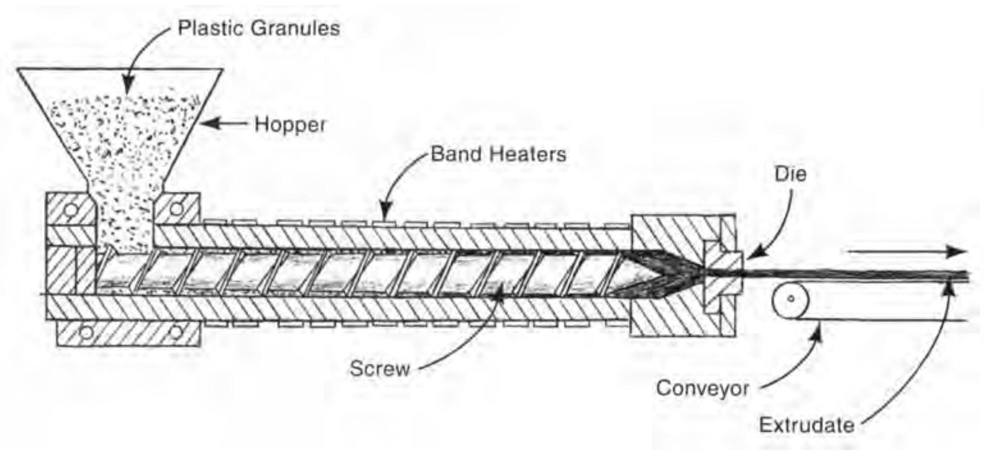

Fig. 41 Schematic section view of the extrusion of plastics.

produced are those required for vehicle trim, house siding, picture frames, door and window components, moldings, and edge trim. Sheet material, after extruding, is commonly rolled between rolls having smooth polished surfaces - or embossed surfaces - depending on the surface finish wanted on the finished sheet. Fiber is usually extruded in multiple strands and then is stretched or drawn down to the diameter wanted. Pipes and tubing are made from dies that have a mandrel or other core to form the hollow interior. These products are pressurized internally after extrusion, and may then be cooled in a vacuum chamber filled with water and a sizing sleeve. The internal pressure in the pipe, and the external vacuum, if used, cause the outer walls of the pipe to bear against the sleeve as the pipe cools, helping maintain consistency of diameter of the pipe or tubing.

I2. ***coextrusion (dual extrusion)*** - is the extrusion of two different plastics at the same time. This procedure may be carried out to create properties in the extruded part that are not feasible with one material, for example, color, strength, barrier, or other properties. The process involves the use of two separate extrusion barrels feeding material into a complex die. If the two materials have melting temperatures too far apart, the operation may be done in two stages. The higher-melting-point material is extruded first and is then treated as an insert around which another material is extruded. The second extrusion follows a method very similar to that used in coating metal wire with plastic insulation. Applications include window component profiles with both rigid elements, for stiffness, and flexible portions, for sealing, and pipe with both insulating foam and conventional walls.

I3. ***foam extrusion*** - (Note: Also see structural foam extrusion, C3h.) Extrusion of foam plastics is used to produce low-density thermoplastic sheet and board material, which is used for a variety of applications. Polystyrene and polyolefins in densities of 2 to 10 lb/ft^3 (32 to 160 kg/m^3) are used. Major applications are thermoformed foam sheet for meat and produce trays and egg cartons. Foam extrusions are used for automotive products such as carpet underlayment and indoor insulation. Tubular insulation for water pipes, and slabs for building insulation and for flotation, are other applications. In flexible formulations, foam blocks and slabs are used for shock absorbers in heavy-duty shipment packaging.

The extrusion process involves the use of two screw extruders, mounted end-to-end. The first extruder heats and mixes the plastic material, particularly mixing the blowing agent (usually in liquid form, but based on carbon dioxide gas). The material is also premixed with a nucleating agent (in small proportion) to insure uniformity and dispersion of the gas bubbles. Proper dispersion of the blowing agent also requires that the polymer mixture be sufficiently heated. The blowing agent is normally injected into the mixture during its passage

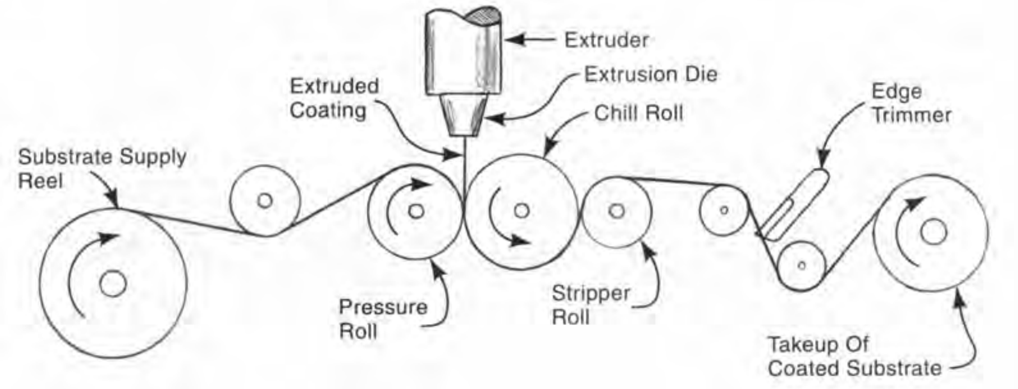

Fig. 4I4 Plastic extrusion coating and laminating another sheet material.

through the first extruder. After thorough mixing, the mixed material moves to the second screw extruder. This second machine maintains the pressure necessary to keep the blowing agent from causing preliminary expansion, while cooling the mixture so that its viscosity is increased when it is forced through the extrusion die. The extrudate then is cool enough to retain the shape imparted by the die. Pressure on the mixture is released as it passes through the die, and the blowing agent expands, producing a series of gas bubbles in the extrudate. The extrudate is further cooled after leaving the die by either water or air or both. It is then cut and slit as desired. Both open-cell (permeable) and closed-cell (fluid tight) materials can be produced. It is possible to produce a fine skin on the extrudate, which can be printed on for product identification. Polyethylene and polystyrene are the two plastics that are most frequently extruded as foams.

I4. ***extrusion coating and laminating*** - In this process, material is extruded through a slot die. The resulting plastic sheet is applied to a moving web of paper, fiberboard, film, foil, or other substrate material, fed from rolls. When two layers of substrate are used, the plastic is extruded between the two layers and the process is known as *laminating*. The substrate material is normally treated beforehand to provide a surface to which the plastic can adhere. The plastic coating is drawn to a thickness of from 0.0005 to 0.002 in (0.013 to 0.05 mm) although it is about 0.020 in (0.5 mm) thick at the die. To ensure good flow properties and adhesion of the plastic coating, the extrusion is run at a very high temperature and the viscosity of the plastic is very low. Because of the low viscosity, the extrudate normally exits the die in a downward direction. Chill rolls cool the material after the layers are joined. The finished material is edge trimmed and sometimes slit after the extrusion operation. The process is illustrated in Fig. 4I4.

The substrate material provides strength and/or stiffness and a surface that is printable, while the plastic layer provides a barrier to liquids or gases. Coated material is used for containers for milk, juice, sauces, puddings and other processed foods. Flexible packaging is another application for various liquids or solids when a barrier is needed. Other applications are credit card stock, wallpaper, insulation, automotive carpet backing, multiwall paper bags, composite drums and cans, oil proof papers, and product wrapping.

I4a. ***wire coating*** - is an extrusion operation similar to that used in profile extrusion and laminated sheet material in that a rotating screw drives the molten plastic through a special die. The process differs from laminating extrusion in that the material to be coated moves at a right angle to the direction of plastic resin flow from the barrel, and the die cavity is circular, surrounding the wire to be coated. This arrangement provides for the flow of material on all sides of the wire. The wire is normally uncoiled and straightened before passing through the die. The coated wire passes through a water trough for cooling, is tested electrically, and is then recoiled. Fig. 4I4a illustrates a typical wire coating die.

Next Page

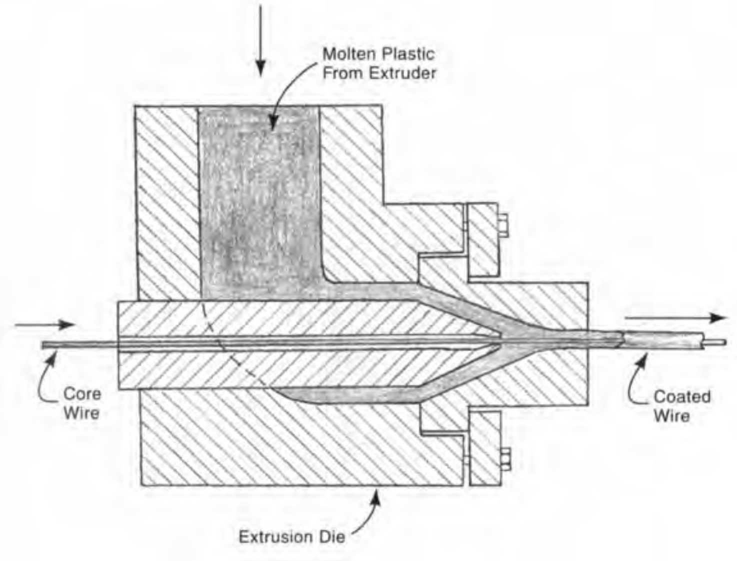

Fig. 4I4a An operating extrusion die for coating wire, shown in cross-section.

I5. *extrusion of film and sheet*

I5a. ***blown film extrusion*** - is a common method for manufacturing plastic films. The process, shown in Fig. 4I5a, involves the extrusion of very large but thin-walled plastic tubing, usually directed upward. The tube is simultaneously expanded from internal air pressure, to up to four times the die diameter and stretched axially, thinning the wall to the desired film thickness and improving its tensile strength. Bi-axial orientation of the film molecules, achieved by stretching the film in two directions, greatly increases its tensile strength in both directions. Cooling air on the outside, supplied by a ring of outlets, also cools the material. Sometimes there is internal cooling as well. The tube is closed by a set of "nip" rolls some distance above the die. The cooled and solidified material can be slit and spread open, and wound on rolls as thin sheet or film. It may also, if used for plastic bags, be cut to length instead of slit. The whole process is continuous and rapid. Polyethylene, both low and high density, is the most commonly-used material but polypropylene, polycarbonate, ethylene copolymers, and other materials are also used. Finished film thickness is 0.0001 to 0.050 in (0.0025 to 1.25 mm). Typical applications are all kinds of food bags, garbage bags, trash bags, agricultural and construction sheet, stretch wrapping material, and water barriers. Film for some food

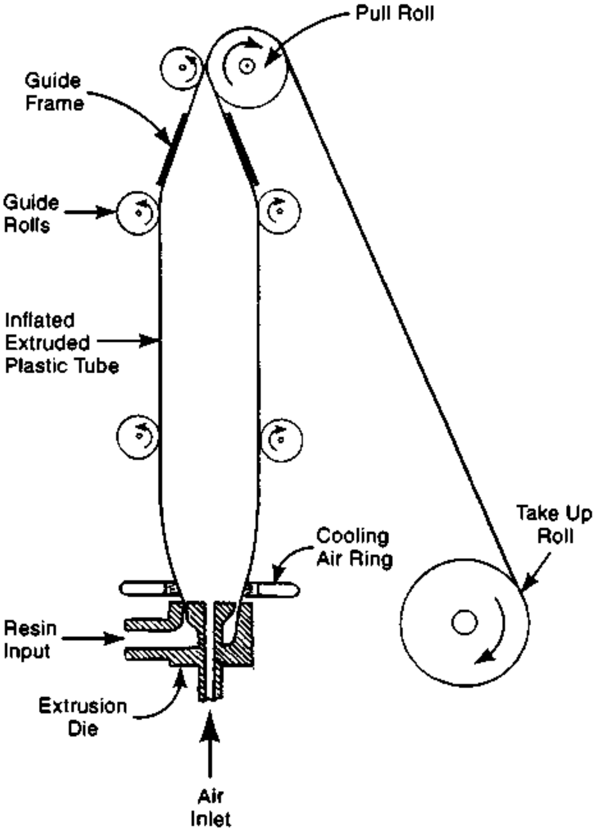

Fig. 4I5a Blown film extrusion. Internal air pressure expands a tube of extruded film and, combined with upward pulling, thins the walls and improves the strength of the film.

Previous Page

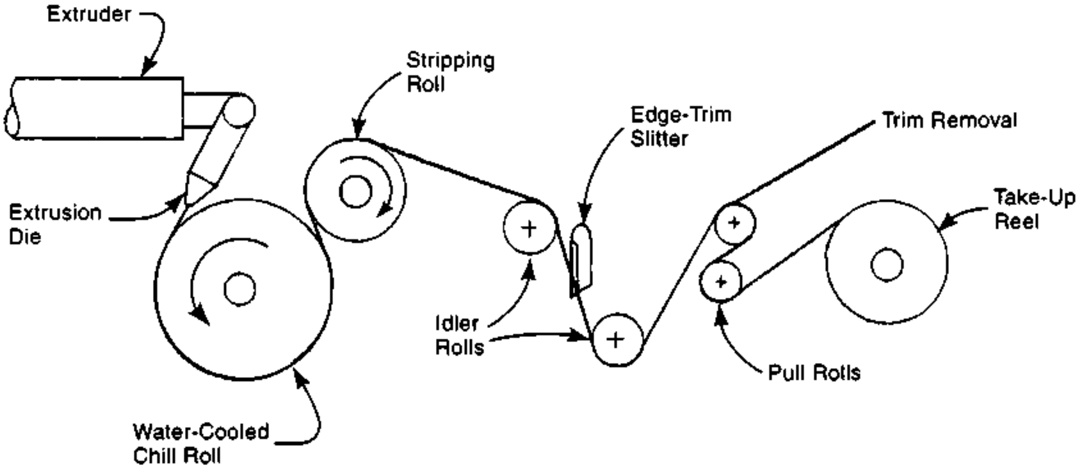

Fig. 4I5b Cost film extrusion shown schematically. The highly polished and plated chill roll imparts a smooth, glossy finish to the film.

applications is coextruded with as many as five layers of material.

I5b. ***cast film extrusion*** - involves extrusion as the first step. The process runs at high output rates - up to about 1500 ft/min (450 m/min). Dies have slot openings as wide as 12 ft (4 m), with typical thickness openings of 0.010 to 0.020 in (0.25 to 0.5 mm). The still-molten extruded sheet is contacted by a chill roll, on which it cools and solidifies. However, in the process, it is drawn down to a thickness as little as 0.002 or 0.003 in (0.05 to 0.076 mm). The chill roll is highly polished and plated, and imparts a smooth glossy finish to the film. The film is then edge trimmed and wound on reels for further processing. For some applications, the as-extruded single axis orientation is modified, using a biaxial orientation process. Common applications are the production of film for coating and laminating uses, for stretch wrapping, and for other packaging. Polyethylene is the prime material processed with this method but polypropylene, nylon, polyester, and PVC are sometimes used. See the process illustration in Fig. 4I5b.

I6. ***operations after extruding*** - In all plastics extrusion, cooling of the extrudate, after the material leaves the extrusion die, is an essential operation. Sizing of the extrudate, by some method, also is very often required. Cooling with air frequently is sufficient but some situations require water cooling. When water immersion is used, the extrudate enters the long water tank through a die in the end wall. This die has approximately the same diameter as the extrusion die and thereby has some sizing benefit. When such a die is used, a pulling device (a pair of powered rollers or belts that gently grip the material) may also aid in sizing. Pressure or vacuum may additionally be involved as a sizing aid. Other post-extrusion operations, often in line with extruding are: roller and spray coating, cut off, edge trimming, slitting, printing or otherwise marking, drilling or piercing, milling, blanking, welding, heat sealing, and assembly to other parts. In many high production situations, these operations can be performed on the extrudate as it moves. "Flying" or rotary tooling, if feasible, is then used for the operations.

J. Calendering

Calendering is a method for producing plastic sheet and film. A heated, softened, plastic is forced between two heated rollers ("nip" rollers), with fixed spacing. The rollers form the plastic into a thick, continuous sheet. Additional rollers reduce the thickness and, if wanted, emboss the sheet. The sheet may be further reduced in thickness by stretching it. The process is used to make various sheet plastic components such as flooring and tape, and to provide material for further operations. Sheet thickness

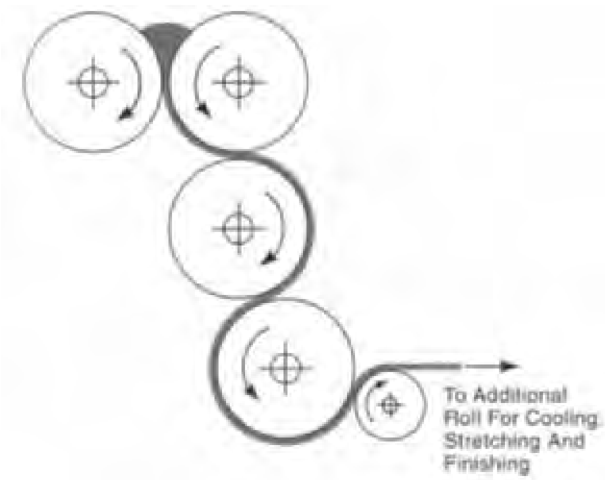

Fig. 4J Forming plastic film by calendering.

ranges from 0.002 to 0.060 in (0.05 to 1.5 mm). ABS and PVC are the most frequently processed plastics. Upholstery sheet, rainwear, shower curtains, and tape are made with the process. By calendering two sheets of plastic with one or more layers of paper or other materials, such objects as credit cards, wallpaper, and playing cards can be made. Fig. 4J illustrates the calendering operation.

K. Vinyl Dispersion Processes

Polyvinyl chloride (PVC), in fine particles, can be formulated as a suspension in a liquid plasticizer, often with some diluents. The viscosity of the suspension can range from that of a paste to that of a pourable liquid. When this dispersion (with copolymers) is heated to a temperature of 260 to 350°F (125 to 175°C), the plastic particles absorb plasticizer and swell, forming a gel. With some further heating, the dispersion is converted to hot melt. When cooled, it turns to solid, plasticized vinyl. When there are no significant diluents or thinners, the material is referred to as a *plastisol*. When diluents and thinners are included, the dispersion is known as an *organosol*. Several methods are available to make use of these materials. A major application is as a protective and insulating coating on other products.

K1. ***spread coating*** - is a general term denoting the application and distribution of a dispersion over the surface of some other material. Knife coating, roll coating, and curtain coating, are all spread coating methods. After spreading, the substrate material with its coating is passed through an oven where the heat causes the dispersed vinyl particles to fuse together. Typical products produced by spread coating are automotive padding, vinyl roll flooring, building siding, coated fabric used in apparel manufacture and soft foamed upholstery materials.

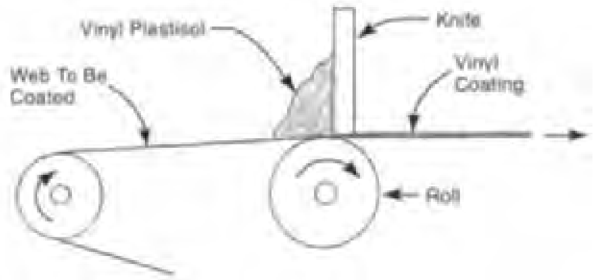

Fig. 4K1a Schematic of knife coating (knife-over-roll coating) in which vinyl plastisol is distributed evenly over the web to be coated. A baking operation to fuse the coating follows the coating operation.

K1a. ***knife coating (knife-over-roll coating)*** - methods use a horizontal straight edge, slightly above the web surface to be coated, to smooth, spread, and control the thickness of the vinyl coating material. The production arrangement is shown in Fig. 4K1a.

K1b. ***roll coating*** - has speed and quality advantages over knife coating in many cases. Fig. 4K1b illustrates two roll coating methods.

K2. ***dip coating (hot dipping) and dip molding*** - When a heated object is immersed in plastisol and withdrawn, and the material remaining on the object fuses, a useful coating can be provided. The object is heated to a temperature high enough to cause the plastisol to gel. The thickness of the coating depends on the temperature of the part to be dipped, its shape, the length of time it remains in the plastisol, the characteristics and temperature of the plastisol and the rate of withdrawal. The coating can be as thin as 0.005 in (0.13 mm) and as thick as 0.25 in (6 mm). The process constitutes an easy method for coating tool handles, glass bottles and other objects to provide easier grasping, electrical insulation or cushioning. Dish drying racks are another application.

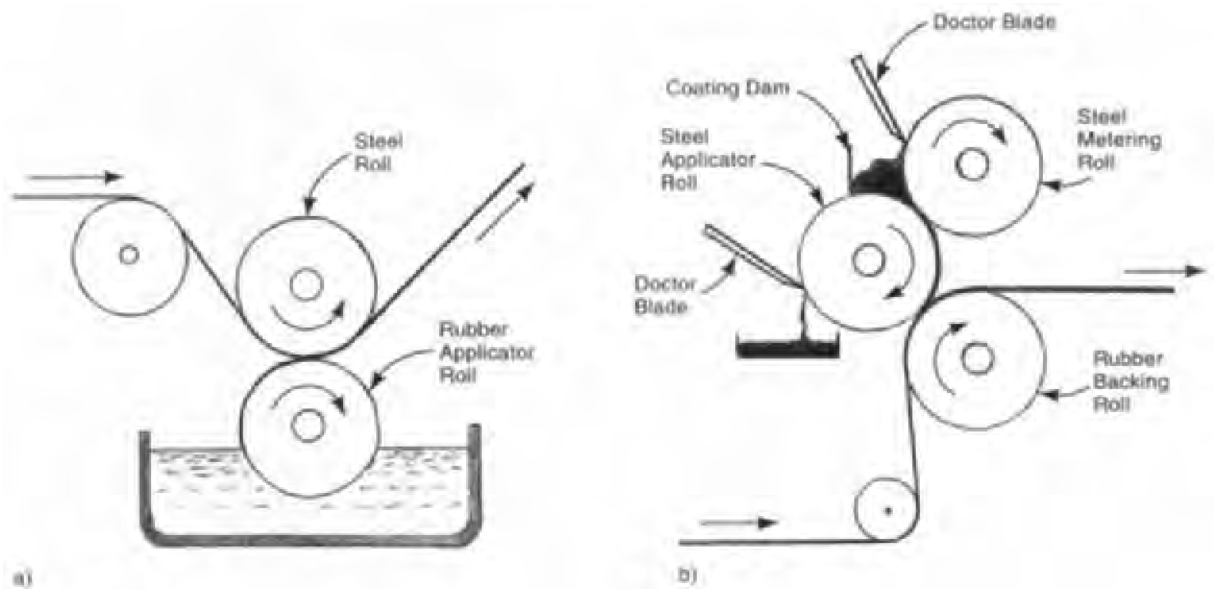

Fig. 4K1b Two roll-coating methods: a) Direct roll coating, used only when the coating material is of low viscosity. The coating liquid is picked up by the rubber applicator roll and is transferred to the web. b) Three-roll nip reverse coating. The metering roll rotates slowly in the opposite direction from that of the applicator roll. The nip between them governs the amount of coating on the applicator roll. The applicator roll rotates in the opposite direction from the web travel and the coating is wiped from the applicator roll and deposited on the web. Coating thickness can be controlled by varying the nip and relative speed of the web and the applicator roll. Coatings having a wide range of viscosities can be deposited with this method.

A typical sequence involves priming the part to provide improved adhesion, reheating the part, immersing it in the plastisol, withdrawal, additional heating to complete fusion, and then cooling. The operation can be done on a batch basis or can be conveyorized to be continuous and automatic.

If this operation is performed with a shaped mandrel or mold, from which the coating is stripped after the coating cools, the operation is referred to as *dip molding*. One common application is the manufacture of medical gloves as illustrated in Fig. 4K2. Another application, using a collapsible mold, is the molding of flexible bellows. Closures and caps are also made with this method. Although vinyl plastisol is the prime material used in dip molding, it is possible to dip mold objects of nylon, silicone and polyurethane.

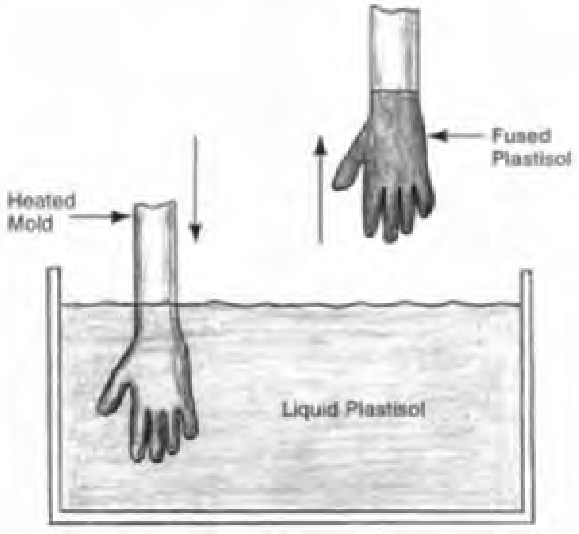

Fig. 4K2 Dip molding of medical gloves. The plastisol coats the heated mold and fuses. After the mold is withdrawn, the solidified coating is stripped from the mold. The thickness of the coating depends on the time of immersion, the temperature of the mold, and the rate of withdrawal.

K2a. ***cold dipping*** - with the part or mold to be dipped at room temperature, is sometimes used when the part to be coated cannot retain enough heat to gel the plastisol or has limited resistance to high heat levels. It may also be used when the surface detail desired may not be achievable when the plastisol gells rapidly on a hot mold. Cold dipping is somewhat slower than hot dipping. The procedure is as follows: The cleaned part is dipped into the liquid plastisol at a uniform rate of immersion. The immersion is held for a few seconds and the part is withdrawn at the same slow and steady rate. The part is then suspended in an oven at 365 to 500°F (185 to 260°C) until the plastisol fuses. Coating cloth work gloves is a common application.

K3. ***slush molding*** - is a casting process for vinyl plastisol and is identical to dip molding except that the plastisol material contacts the inside of a hollow mold instead of the outside of a male mold. The hollow mold is filled with plastisol and heated sufficiently to gel the material in contact with the inner surface of the mold. The liquid material in the mold is poured back into the source container, leaving a shell of gelled material in the mold. The higher the mold temperature and the longer the plastisol is contained in the mold, the greater the thickness of the fused material. Further heat applied to the mold fully fuses the plastisol. The mold is cooled and the hollow finished part is removed. The process is useful for making products such as beach balls, dolls, boots, hollow toys, and the surface of automotive head and arm rests. The process is suitable for hand operation for making prototypes and for short run production but can be automated for mass production situations. For products with fine surface detail, two or more fills of the mold may be employed, the first one with the mold cold to allow the plastisol to contact all surface details before gelling. Excess material from the first fill is poured out and the mold is heated to gel the first-coat material. The mold is then filled again while hot, with the same plastisol or sometimes with a cellular plastisol in order to provide a soft, thicker lining to the product.

K4. ***cavity, in-place, and low-pressure molding*** - are all essentially casting operations to produce solid parts from plastisol. With *cavity molding,* a mold is filled with plastisol and heated until the part has fused. The mold is then cooled so that the part can be removed. *In place molding* is simply the casting of a soft plasticised vinyl as a seal and adhesive in some other part. Examples are the seals for jar and bottle caps where plastisol is metered into the inverted cap which is then heated to fuse the plastisol. A similar approach is used in the manufacture of automotive air cleaner filters, to bond and seal the filter material to the steel frame of the device.Clay sewer pipe sections are also sealed together with this approach. *Low-pressure molding* is a somewhat mechanized version of cavity molding, wherein metered amounts of plastisol are pumped into closed molds which are then heated to fuse the plastisol. The molds are then cooled and opened. Shoe soles and printing plates are made with this method. The process is also used to encapsulate electronic components.

K5. ***strand coating, using plastisols and organisols*** - Wire, filaments and cords can be coated with vinyl plastisol. The operation is performed by running the strand through a plastisol reservoir or by pumping the plastisol over the strands which then may pass through a circular small-diameter die to control the amount of material covering the strand. The die wipes off any excess material that may be on the strand. In some cases, no die is needed and a low-viscosity organisol leaves only a thin layer of coating on the strand. Multiple passes may then be made. With a die, there are two approaches. In the floating die method, the die is loosely held and it tends to center itself on the strand. Low-viscosity organisol or plastisol is used with this approach. In the set-die method, the die is securely mounted and the strand is guided to pass through the center of the die to insure a concentric application. The strand must be under some tension if concentricity is to be controlled. In all these process variations, the coated wire is subjected to heat after coating, to fuse the plastisol. Coated strands are used in the manufacture of fiberglass screening, electrical wire, rope, thread, and woven cords.

K6. ***spray coating*** - Plastisols and organisols can be sprayed to apply decorative or protective coatings to various objects. The process is used for outdoor furniture, appliances and building components, and is particularly useful if the item to be coated is irregular in shape and too large in size or otherwise unsuitable for dip coating. Essentially conventional spray painting equipment can be used. After the coating has been allowed to level, oven baking at a temperature of 350 to 400°F (175 to 200°C) follows to fuse the coating.

Organisols are more commonly sprayed than plastisols since spraying works best with low viscosity fluids. The process is used for tank and drum linings and automotive anti-corrosion sealants.

K7. ***extrusion of plastisol*** - is another coating method. The liquid plastisol is fed to a heated barrel of the extruder where its PVC particles absorb plasticizer and fuse. The resulting compound is extruded as film through a die that has a slot opening. It is fed onto and adheres to, a fabric or other substrate. One application, in addition to coated fabrics, is the manufacture of battery separators, where the extrudate is fed to a fiberglass sheet where it forms spacer ribs on the fabric.

L. Welding and Adhesive Bonding of Plastics

Welding of plastics is carried out by heating, in the joint area, the thermoplastic pieces to be joined to the point where the material softens or melts and fuses together. There are a number of different methods used to provide the heat, several using friction and several using heat from external sources. Welding or bonding of plastic components takes place when large or complex components are desired and it is not practical or convenient to make them with primary processes. It is also used when parts of different colors or materials are to be joined or when some other component is to be enclosed.

L1. ***friction or spin welding*** - is a method useful when the joint is circular. One part is held stationary and the other, while being pressed against it, is rotated or spun rapidly while the surfaces to be welded are in contact. The friction from the rubbing of the two surfaces develops heat, which softens the plastic at the joint. The rotation is stopped and the two parts are continued to be pressed together. When the joint cools, a strong bond is created. Rotational speeds are typically 10 to 40 fps (3 to 12 mps) and pressures typically 300 to 700 lbf/in^2 (2100 to 4800 kPa). Hermetic seals can be produced with this approach. The process is applicable to nearly all rigid thermoplastics; low-density polyethylene and other soft materials may not process as well. As long as one of the parts can be put in a chuck and rotated and a circular joint is acceptable, the process can be used. See Fig. 4L1 for an illustration. Containers for cosmetics and other products,

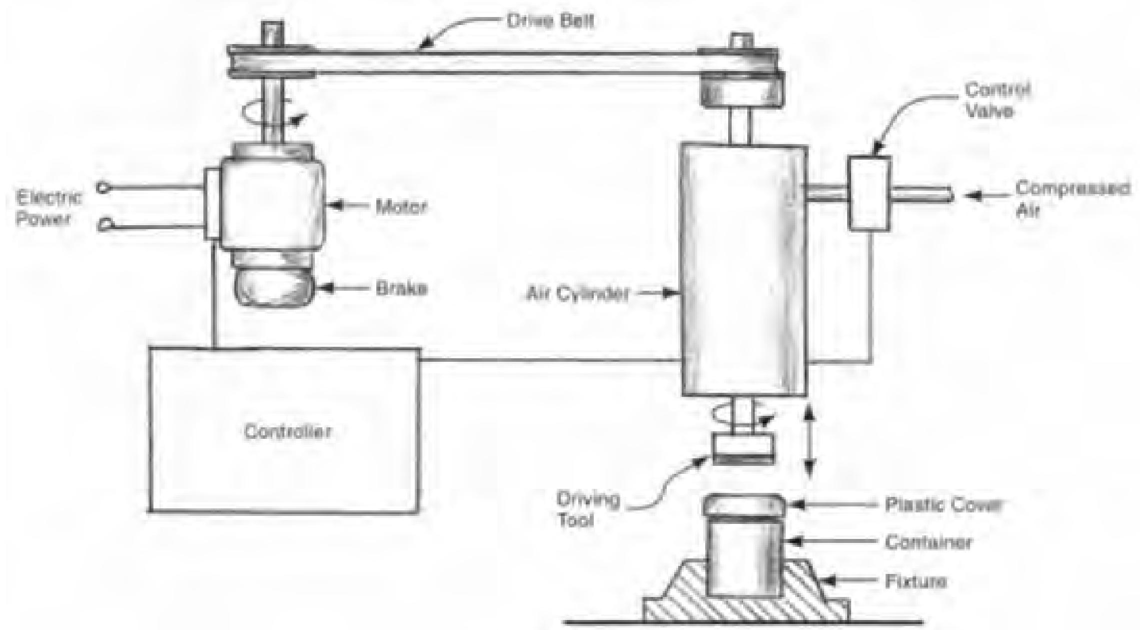

Fig. 4L1 Arrangement for spin welding. The driving tool descends and rotates the plastic cover against the plastic workpiece. Frictional heat fuses the two together. Speed of rotation, timing, and pressure are controlled automatically.

bottles and gasoline filters are welded with this process.

L2. ***hot plate welding*** - uses a heated metal platen to soften the surfaces of two parts to be welded together. In production situations, the full operational sequence is as follows: 1) the mating parts are placed in holding fixtures, which align them for assembly. 2) an electrically- heated plate, whose surfaces match the mating surfaces of the parts, is placed between them. 3) the parts and fixtures are brought together so that the heated plate heats the surfaces to be joined. 4) when the surfaces are sufficiently hot, i.e., when the surface material has softened, the plate is withdrawn. 5) the mating parts are brought together with some pressure and are held in contact until the mating surfaces, which have fused together, are cool. The fixtures are withdrawn and the welded part is removed from the lower holding fixture. The holding fixture and plate contain stops to control the amount of deformation and the final height of the assembly.

Hot plate welding is used on a variety of automotive parts including tail light assemblies, vehicle fuel tanks and tanks for other liquids, pipe fittings, storage battery cases, and appliance parts. The process is well suited to large assemblies. Liquid and gas-tight seals can be made. Surfaces of the mating parts do not have to be flat so long as the surfaces of the heating plate can be contoured to match them. A considerable variety of plastics can be welded by this method including many dissimilar pairs. See Fig. 4L2 for an illustration of the process.

L3. ***vibration welding*** - uses mechanical oscillating or orbital movement between the surfaces to be welded to create frictional heat. The process differs from ultrasonic welding in that the frequency of

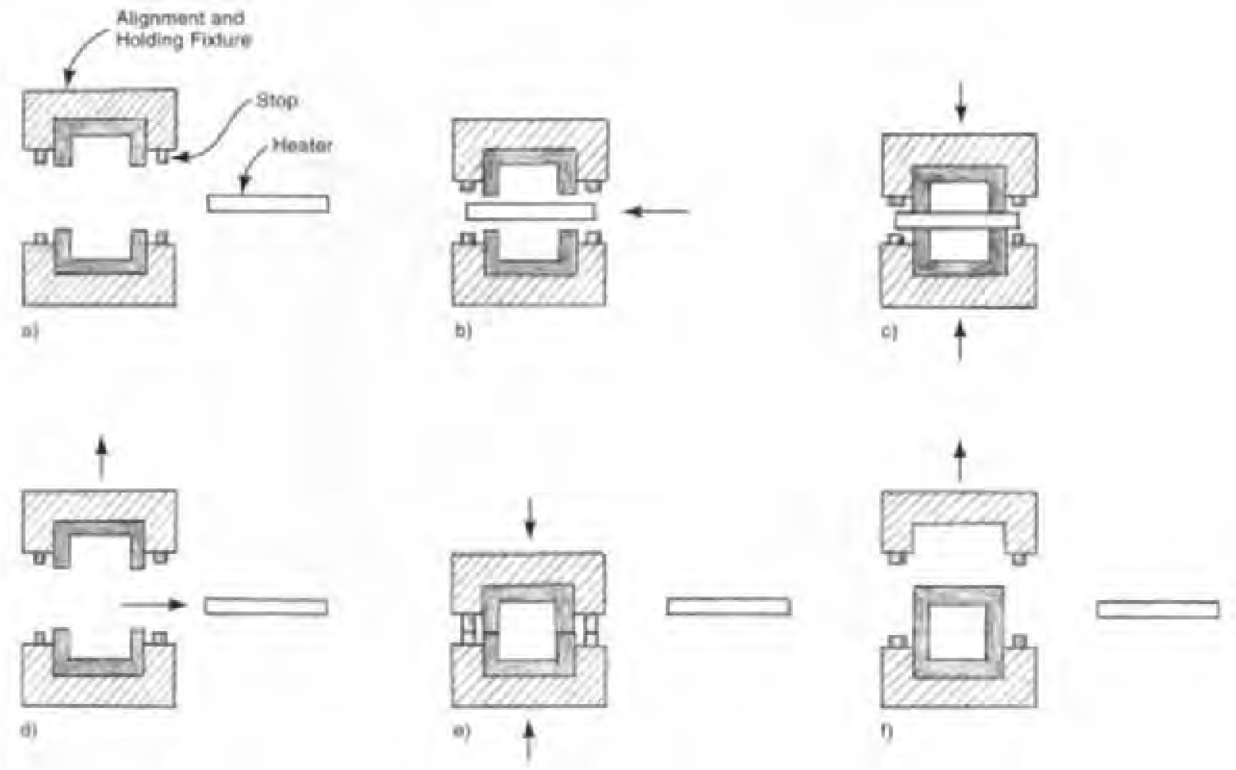

Fig. 4L2 Hot plate welding: a) Parts to be joined are inserted in the alignment and holding fixture; heater is nearby, b) Heater is placed between the two parts, c) Fixture closes to bring parts and heater in contact, d) After part surfaces are sufficiently heated, fixture opens and heater is withdrawn, e) Fixture closes, bringing the softened surfaces together. Stop pins prevent excessive force against parts. f) After part surfaces cool, fixture opens so that welded part can be removed.

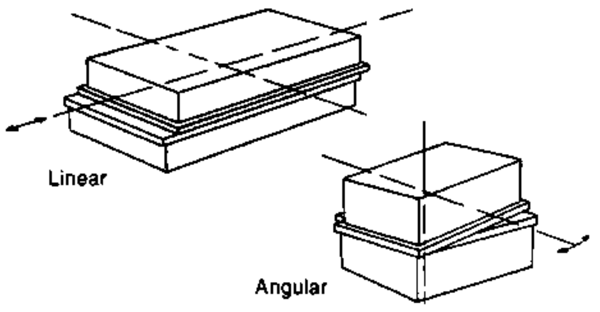

Fig. 4L3 The movement of parts undergoing vibration welding can be either linear or angular. (*from Bralla, Design for Manufacturability Handbook*[6].)

oscillation is much less, the amplitude is greater and the direction of oscillation is parallel rather than perpendicular to the plane of the surfaces being joined. Oscillating motions can be linear or angular. Typical frequencies of vibration are 100 to 300 Hz with amplitudes of 0.015 to 0.100 in (0.4 to 2.5 mm). Pressures of 200 to 250 lbf/in^2 (1400 to 1700 kPa) are exerted on the surfaces during the operation. Movements are guided by holding fixtures for the parts to be joined. After the vibration has softened or melted the joint surfaces sufficiently for bonding to take place, the vibration stops and the parts are held together briefly until the joint cools and solidifies. The equipment is designed to align the parts properly when the vibration is stopped. The operation is quick; typical vibration periods are 1 to 3 seconds and weld solidification times are usually less than one second. The operation is feasible for large and small parts but is particularly applicable for large parts of crystalline resins. Joint surfaces are usually flat, but curved and stepped surfaces also can be welded. The process is used extensively in the automobile industry. Plastic bumper assemblies, dashboard assemblies, air conditioning ductwork, fuel tanks, tail lights, fluid reservoirs, and wall panels are all joined with this method. A typical vibration welding operation is shown schematically in Fig. 4L3.

L4. ***ultrasonic welding and sealing*** - is similar in principle to vibration welding, but there are significant differences. With ultrasonic welding, the frequency of vibration is in the range of 20 to 40 kHz, far higher than with vibration welding. The magnitude of vibration is correspondingly smaller, typically being less than 0.001 in (0.025 mm) at 20 kHz. The direction of movement is at right angles to the joint surface instead of parallel to it and the area of weld is also typically much smaller. The vibration energy is directed to the joint through the parts to be welded; there is no visible movement of the parts. The equipment converts high frequency electrical oscillations to mechanical vibratory energy at ultrasonic frequencies. A tuned metal horn tool transmits this energy to the workpieces when it makes contact with them. The energy passes to the joint area where the vibration causes friction. Frictional heat melts the plastic at the joint and the surfaces fuse together as the energy is cut off. When the joint area cools, a strong bond results. Electronic systems in the welding equipment have made it possible to accurately control the amount of material melted, the joint and part dimensions, and the amount of flash produced.

Dissimilar plastics can be welded as long as their melting points are within about 30°F (17°C). Except for spot welding and sealing, rigid plastics work somewhat better than the softer plastics for most ultrasonic welding operations. The process is usable for joining plastic parts, inserting metal parts into plastic components, staking (upsetting ends of bosses to form a rivet-like fastener), spot-welding, and sealing sheet and film material. Typical applications of ultrasonic welding include all kinds of small appliance parts, medical devices, double-wall insulated drinking cups and mugs, film cartridges, electronic calculators, clock frames, vehicle taillight assemblies, decorative panels, and toys. Fig. 4L4 illustrates a typical ultrasonic welding operation.

L5. ***ultrasonic spot welding*** - Ultrasonic welding equipment is well suited to making spot welds in plastic components. A standard shape of horn tip is used. The tip has a point long enough to fully penetrate the top layer of material and part way into the underlying layer. Vibration of the tool heats and melts the material it contacts. The process is useful for joining large parts, making welds in areas that may be difficult to join with other methods, and for fastening parts that do not require a continuous weld seam. Fig. 4L5 illustrates a typical ultrasonic spot welding operation.

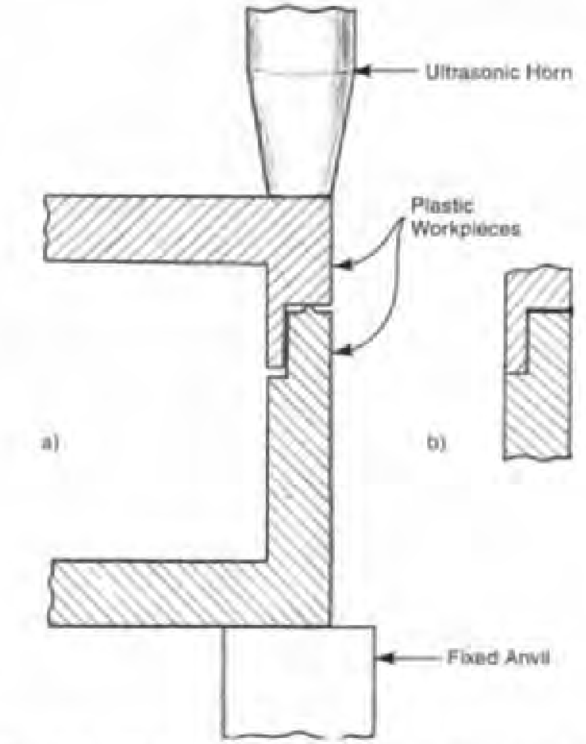

Fig. 4L4 Ultrasonic welding of two plastic parts: a) The joint before welding. b) The joint after welding.

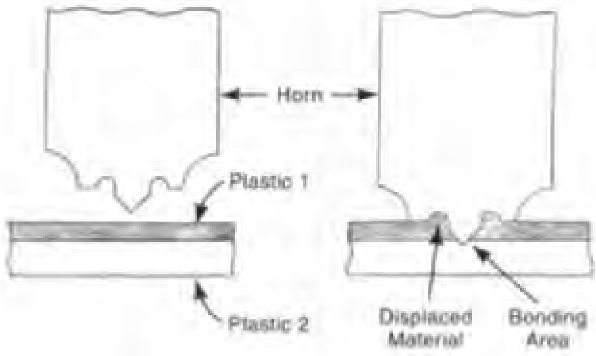

Fig. 4L5 Ultrasonic spot welding of plastic materials.

L6. ***ultrasonic film and fabric welding***[2] - Layers of film and fabric can be joined in continuous seams by ultrasonic welding. The ultrasonic welding horn is equipped with a smooth rounded tip and the underlying anvil has either a rotating wheel or a smooth surface. The material to be joined is pulled under the horn tip at the proper rate for seam welding. The rotating anvil can be engraved in a stitch pattern which is transferred to the fabric or sheet, simulating the appearance of a sewn seam. The process is used to join film sheet, and woven or non woven plastic fabrics. The sealing of polyester film is a common application.

L7. ***adhesive bonding of plastics*** - Information on adhesive bonding processes can be found in Chapter 7, section D. The material that follows applies only to the special steps and procedures involved when the parts to be joined are made from plastics.

L7a. ***solvent cementing of plastics*** - Some plastics can be bonded with strong joints by softening the surfaces in contact with a solvent and then pressing the two surfaces together for a short period. The plastics most suited to this approach are the amorphous type: polystyrene, acrylic, cellulosics, vinyl, polycarbonate, and copolymers of polyphenylene ether. Polyethylene and polypropylene are not bondable with this approach. The solvent used is one whose solubility is close to that of the material to be bonded. A solvent that is suitable for use with one plastic may not be suitable for another. Best results are often obtained if a small amount (up to 15%) of the base material is dissolved in the solvent beforehand. As with all bonding methods, the surfaces must be thoroughly cleaned before the bonding operation. The solvent can be applied by brushing, dipping, spraying, flooding, or capillary action. After some softening, the surfaces are pressed together under a moderate pressure - 100 to 200 psi (700 to 1400 KPa) - is sometimes recommended, but pressure must not be so high that the parts are distorted. Post heating in an oven to a temperature below the softening point of the base plastics involved may also be carried out. Objects fabricated from acrylic are commonly solvent-cemented but perhaps the major use of this method is for installation and assembly of PVC and CPVC piping.

L7b. ***pretreatment of plastic surfaces for bonding*** - See section M1 on page 197.

L7c. ***electromagnetic adhesive bonding*** - uses induction heating of an adhesive to join two plastics or other non-metallic components. The adhesive

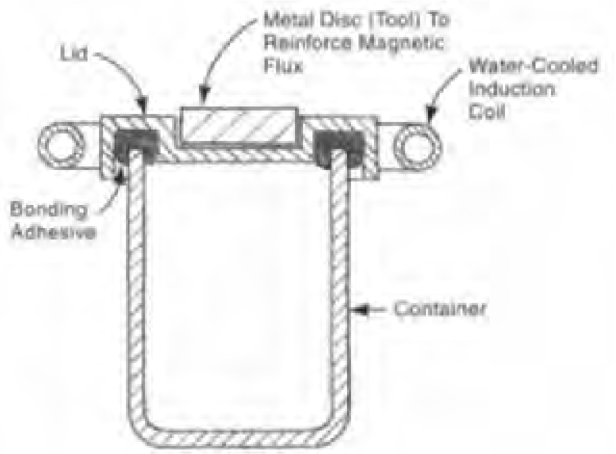

Fig. 4L7c Electromagnetic adhesive bonding in section view. Electromagnetic induction from the coil heats and agitates ferromagnetic particles in the adhesive, heating and softening the adhesive so that it adheres to the parts to be joined.

consists of a mixture of resin in which is dispersed very small ferromagnetic particles. The adhesive can be in the form of a paste, or a preform molded or cut from tape, sheet, or strands. When the induction generator is activated, radio-frequency electrical oscillations in a coil near the joint emit electromagnetic energy that causes the ferromagnetic particles to oscillate. Eddy currents generated in the ferromagnetic particles cause them to become heated. The heat from the particles and the friction from their movement quickly softens or melts the adhesive so that it wets and bonds with the surfaces to be joined. Thermosetting adhesives polymerize and harden from the heat; thermoplastic adhesives cool and solidify after the energy is shut off. The process provides good seals as well as strong joints. Joints need not be flat or regular, so long as the adhesive can fill any gaps. The process is most suited to moderate- or high-production levels, since fixtures, coils, operating settings, and possibly adhesive preforms, have to be developed for each application. Automotive parts are a major application, including such items as heating and air conditioning ducts, and seat backs. Medical devices and filters are other applications. Fig. 4L7c shows an example of electromagnetic adhesive bonding.

L8. ***induction welding*** - is similar, in many respects, to electromagnetic adhesive bonding. However, the workpieces themselves, rather than an adhesive, are melted by the induction heating. The induction effect, which requires an electrical conductor, is achieved by inserting an open-grid metallic piece between the opposing surfaces of the joint. The metallic piece may be a screen, foil, wire, or some other conductive part that will absorb the electromagnetic energy, get hot, and heat the surrounding plastics. When the power is shut off, light pressure is maintained across the joint and the melted joint materials fuse together and solidify. The metallic insert remains in the joint. The process is very fast; only a few seconds are required to weld the joint surfaces together. The equipment and tooling required are quite similar to those used to induction braze or solder joints in metal parts. See descriptions and illustration in sections 7A2h and 7B4.

L9. ***radio frequency sealing (dielectric sealing)*** - is a method for joining plastic film and sheet parts. Energy in the form of electromagnetic radiation at radio frequencies is directed at the joint, and it agitates the plastic molecules. A radio frequency of approximately 27 MHz is commonly used. Polar molecules of the plastic sheets vibrate at that frequency, and experience friction with other molecules, producing heat. The material in the joint area is thereby softened. Under pressure, the joint surfaces fuse together and, when the power is shut off and the material cools, a permanent seal is achieved. The process is used most frequently with flexible and rigid PVC but many other plastics can be processed including thermoplastic polyurethane, ABS, polyester film, EVA, acetate, and acrylic. Polystyrene, polyethylene, and polypropylene, however, are not suitable for the process. The equipment involves, in addition to a RF electrical oscillator, a press and dies for the particular application Typical products assembled by this operation include inflatable toys, swimming pool liners, shower curtains, rainwear, medical bags, looseleaf notebooks, packaging, and automobile interior components.

L10. ***thermal sealing (heat sealing) of sheet*** - In this method, the heat is applied externally and travels through the sheet sufficiently that the sheet materials in contact are soft enough to fuse together. The heat source is a bar, knife edge, metal band, wheel or roller, that is heated by electrical resistance or radio frequency energy while in contact with the top or bottom sheet. This tool is coated with PTFE ("Teflon") to prevent the softened sheet from sticking to it. Some high-production machines use heated sealing rolls or wheels, followed by pressure wheels, followed by cooling wheels as the sheet materials pass through them. Polyethylene sheet and film are frequently bonded with this method.

L11. ***hot gas welding*** - is a method used to join plastic sheets, normally in thicknesses from 1/16 to 3/8 in (1.5 to 10 mm). The process is very similar to gas welding of metals, except for the lower temperature and the absence of direct flame. Hot gases from a hand held gun are directed to melt (soften) the edges of the parts to be joined enough that they can fuse together. A welding rod, of the same plastic material as the parts being joined, is also softened and added to the material at the joint to provide any additional material needed for a fillet. The welding rod is often of a triangular cross-section and is pressed by the operator into a v-shaped space at the joint. When the heat is withdrawn, the material cools and solidifies into an integral joint. The hot gas is not supplied by a flame at the nozzle but is simply air or, in some cases, nitrogen, heated electrically to a temperature of 400 to 570°F (200 to 300°C). Edges of plates to be welded are beveled mechanically before welding. No flux is needed and there is no slag to be chipped away.

Polyvinyl chloride (PVC), polyethylene, polypropylene, acrylic, polystyrene, polycarbonate, and ABS are the plastics most commonly used for welding applications. Tanks, piping, large outdoor signs, ducting, and structural assemblies are common applications. The process is particularly useful in making components too big to mold or cast by primary methods.

M. Surface Finishing and Decorating Processes for Plastics

Many methods are available to change the surfaces of plastic products to improve their appearance and make them more useful. Surface property and color changes, the use of contrasting colors, trademarks, and other identification, product use information, and special effects all can be achieved with the processes described below.

M1. ***surface treatments for plastic parts*** - Various chemical and physical surface treatments may be applied to plastics to prepare them for further operations, usually to facilitate adhesion of coatings or bonding agents but sometimes to improve appearance or functional usefulness. These treatments include cleaning, chemical etching, flame treatment, corona discharge, plasma treatments, and priming.

M1a. ***washing and cleaning*** - methods are described in Chapter 8 of this handbook for parts made of metals and various other materials, often including plastics. Due caution must be observed with cleaning methods such as abrasive and brush cleaning which can damage surfaces of plastics. Steam or other high temperature methods may involve temperatures that soften surfaces of plastic parts. Some solvents may cause crazing or other adverse effects on some plastics, so it is desirable to test proposed solvent processes on a sample of the material before using them. Plastic parts, however, are less apt to require removal of scale, grease, and other soils that characterize metals.

M1b. ***chemical etching*** - is done on some plastics to make the surfaces more bondable or plateable. Fluorocarbon plastics are notable examples. Naturally very slippery, these plastics are treated with a sodium naphthalene solution prior to adhesive bonding. Other plastics may be immersed in, or have an application of, sulfuric or chromic acid. The resulting surface has enough micro-roughness to improve its wettability.[2] Epoxy printed circuit boards are treated with a potassium permanganate solution prior to electroless copper plating. Acrylic, polycarbonate, and PVC window panels are treated to reduce reflections.

M1c. ***corona discharge*** - consists of a series of small, uniformly-distributed electric sparks, which cause changes in the atomic structure of the surface being treated. The process, which is represented in Fig. 4M1c, is used most often on plastic film to increase the bonding strength of the surface. The process is often used to prepare surfaces for printing and labeling. Inks, paints, and adhesives

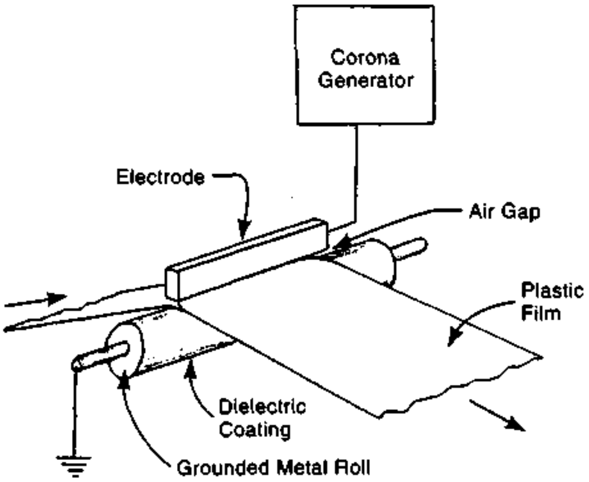

Fig. 4M1c Corona discharge treatment to prepare a plastic film surface for printing, painting, or adhesive bonding. The corona discharge from the electrode in the rectangular ceramic tube increases the surface energy of the film that passes beneath it.

adhere to the treated surface due to improved intermolecular bonding resulting from the treatment.

The equipment required consists of a power supply and a treater. The power supply provides a high-frequency oscillation (10 to 30kHz) at high potential. The treater subjects the workpiece to a corona from this electrical charge. For film, the treater consists of a rectangular ceramic tube containing an electrode that carries the high-potential output of the power supply, and a grounded metallic roll, coated with a dielectric material. The roll supports the film as it passes under the electrode. The corona discharge affects the surface that faces the high voltage; the surface facing the ground is not affected. The electrostatic discharge also produces ozone, which must be removed from the apparatus. Polypropylene, high density polyethylene, PET, and PVC are processed in sheet or woven fabric form. Products processed by corona discharge include combs, trays, cups, bottles, and other containers.

M1d. ***flame treatment*** - is a very common process for making the surfaces of molded plastic parts more receptive to ink, paint, and other coatings. It is used on blow-molded plastic bottles to prepare them for label printing. An oxidizing flame at a temperature of 2000 to 5000°F (1100 to 2800°C) impinges on the surface for less than a second, but causes enough oxidation so that inks, paints, lacquers, and adhesives will adhere. The usual method in high-production situations, as shown in Fig. 4M1d, is for the bottles on a conveyor or rotating machine table to briefly pass through a stationary flame. Polyethylene is the material most notable for being flame treated.

M1e. ***plasma treatment*** - is a newer surface treating process for plastic parts to make their surfaces more wettable and more suitable for bonding or coating. In a chamber containing the parts to be treated, a gas or gas mixture, with its molecules dissociated, contacts the surfaces of the parts, micro-etching them and making them cleaner and

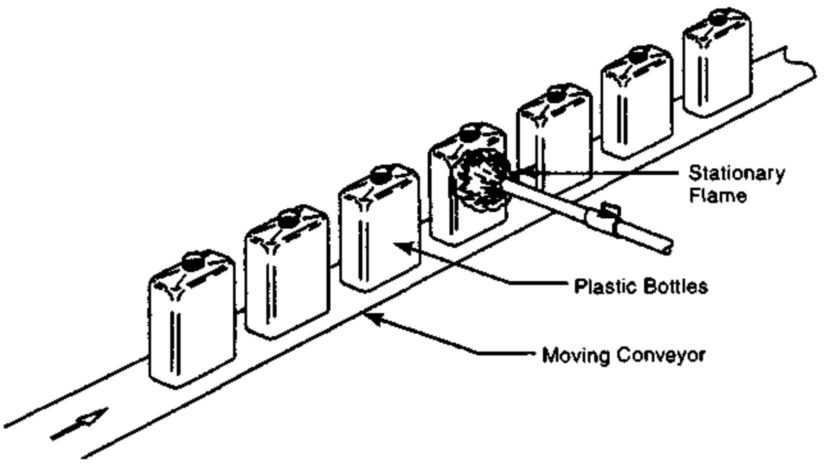

Fig. 4M1d flame treatment of plastic bottles facilitates adhesion of printing on the surface.

more active. The process works on a batch basis. Parts are placed in a chamber. A low vacuum is drawn. The gas to be ionized is then introduced into the chamber under a partial vacuum, and is subjected to an electromagnetic field at a radio frequency. This partially ionizes the gas, which then consists of ions, free electrons, and neutral particles, excited at a broad range of energy levels. Electrons, ions, free radicals, and photons, react with the surface molecules of the plastic workpieces and cause a chemical and physical modification. Gases or gas mixtures used may include: nitrogen, argon, air, oxygen, nitrous oxide, helium, water vapor, methane, tetrafluoromethane, carbon dioxide, and ammonia. Each gas yields a specific plasma composition and produces particular surface effects. Despite the high energy of some particles in the plasma, the overall plasma is not hot enough to affect the workpieces except at the very surface.

Plasma treatment is used to provide adhesion for coatings including graphics, applied by silk screening, other printing methods, or painting, to allow adhesive bonding, to etch microcircuits, and for medical applications, including improvement of membranes used in dialysis treatment.

M2. ***hot stamping*** - is a common method for applying decorations, printed material, and other surface changes to plastic products. The process involves a selective transfer of coating material to the surface of the workpiece. A multi-layer plastic foil is placed against the surface to be decorated. Heat from a hot pad, roller, or die, which is pressed against the foil, causes the coating material to be transferred to the workpiece. The foil typically consists of the following layers: 1) a carrier film, usually polyester, 2) a layer of a thin release agent that is activated when heated, 3) a layer of the decorative coating to be transferred to the workpiece. This coating may be metallic, or an ink, dye, or paint, often in several colors, 4) a protective layer for the decorative coating, and 5) an adhesive, which is formulated to bond the desired coating to the workpiece. The rubber or metal hot pad, is hot enough to melt the release coating of the foil, and to activate the adhesive coating. Often an engraved die is used. It is made to the form of the decorative design or lettering to be transferred. Then the design transferred is in the form of the die, rather than from a printed design on the foil. When either the die or the pad is briefly held against the foil and workpiece, the decorative material is transferred. Upon cooling, the coating is firmly bonded to the workpiece surface, which is slightly depressed in the coated area. The protective layer is also transferred and serves to shield the decorative coating of the part from abrasion or chemical attack.

All kinds of plastic parts are hot stamped to provide nomenclature, decorations, and different surface effects, usually in localized areas. Wide area hot stamping is also feasible and is employed to produce a simulated wood grain on TV cabinets and other plastic objects. One common approach for localized areas is to mold the part so that the area to be decorated is raised and formed to the lettering or decoration wanted. Then the foil is stamped on the raised surface with a flat pad or roller, and the decoration takes its shape from the workpiece shape. This procedure works well when raised lettering or decoration is desired. Fig. 4M2 illustrates hot stamping with both an engraved metal die and a flat silicone pad.

M2a. ***transfer coating (hot transfer coating)*** - is similar to hot stamping, but is primarily a decal process as described in section 8I9. Decals with information or decoration, printed on a plastic film and backed with paper or plastic are transferred to a workpiece. The printing is usually by the gravure method and is multicolored. The transfer is effected with heated rubber pads or rollers but at lower pressures than those used in hot stamping. The film is released from its backing and adheres to the workpiece. The method is quick and economical and is used for many kinds of labels and other decorative effects such as wood graining.

M3. ***painting*** - Although coloring can be incorporated into plastic parts as they are molded, it is common for plastic parts to be painted as well. Plastic parts are painted when an area of contrasting color is desired, when the finished appearance desired is not feasible with molded-in colors, to match the color of other parts that are painted and to cover surface imperfections. Selective painting, i.e., painting only a portion of the part involved, is common. Many painting processes are available for painting plastic parts. These are described in Chapter 8 since they are also applicable to workpieces made from materials other than plastics.

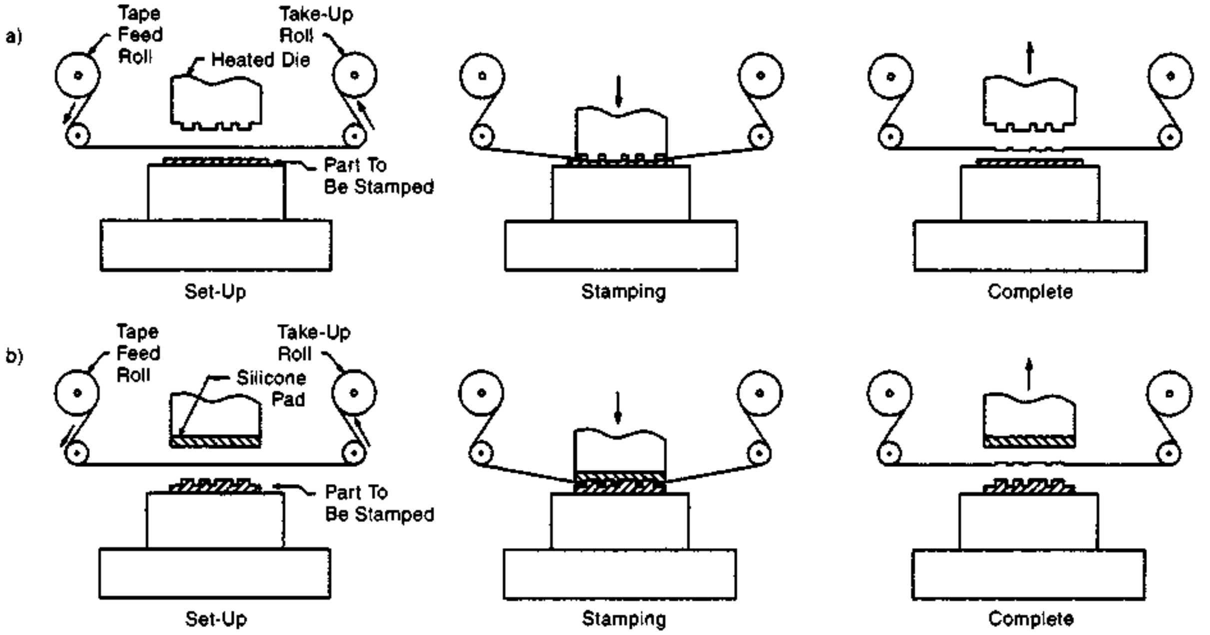

Fig. 4M2 Hot roll-leaf stamping of plastic parts: a) Using a heated metal die, b) Using a hot silicone pad.

They include spray coating (in several variations), dip, curtain, flow and roller coating. Paint material used with plastics are usually plastics-based and the paint material and solvents used, if any, are ones that are compatible with the substrate plastic. Fig. 4M3 illustrates a typical paint mask used in selective spray painting a plastic part.

M3a. ***spray and wipe*** - is used to put recessed areas of decorations or marking in a different color. The process simply involves spray painting the part and wiping off the paint from the non-recessed areas.

M3b. ***powder painting of plastics*** - Application methods for powder paints are summarized in Chapter 8 of this handbook. Thermosetting plastic substrate materials are coated with methods parallel to those involved with other non-conductive materials. Electrostatic spray, fluidized bed, electrostatic fluidized bed, and friction static spraying are applicable methods. Pretreatment of plastic surfaces to ensure adequate adhesion and electrostatic attraction may also be required. The elevated temperature required to fuse the powder, often about 400°F (200°C), has prevented significant commercial use of powder coating for thermoplastics.

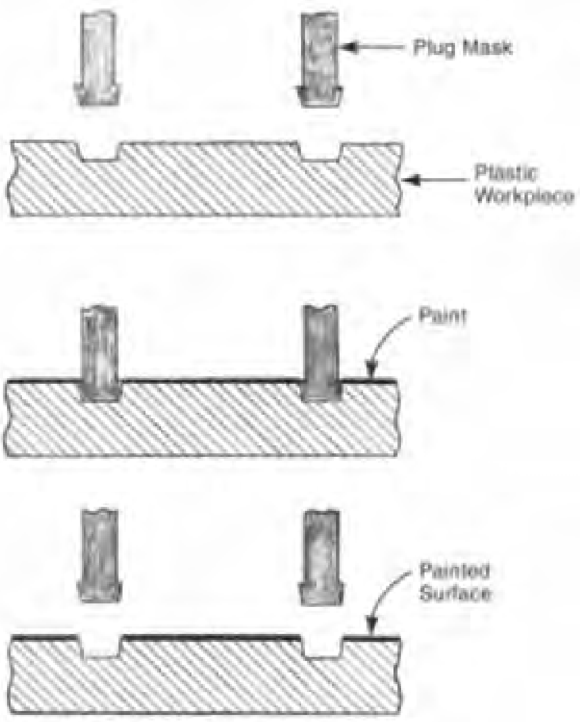

Fig. 4M3 Painting a plastic part with a plug mask. Recessed areas are kept free of paint while the surface of the part is painted.

M3c. ***manufacture of powder coatings*** - Three different methods are in use for the manufacture of powder paints: dry blending, melt mixing, and solution.

M3c1. ***dry blending*** - is used to mix PVC and thermosetting powders for thick film applications. A high-intensity mixer (See 4A4b.) or ball mill mixer (See 11D3.) is used. The ingredients include the basic resin, pigments and other solid additives. In the case of PVC, plasticizer and other liquid additives are also added. Temperature is controlled during the operation. For PVC, a temperature of about 212°F (100°C) is maintained. Sieving is performed after the mixing operation using a 60 to 100 mesh screen.

When a ball mill is used, the operation requires much more time. Because heat is generated, the catalyst is usually added toward the end of the mixing process. Ball-mill dry blending is used to make powders for fluidized bed and electrostatic applications. Ball-milled powder is also screened after mixing.

M3c2. ***melt mixing*** - involves the following steps: 1) premixing of ingredients. (One of a variety of mixers may be employed: cone mixer, high intensity mixer, ball mill, ribbon blender.) 2) melt mixing. This involves heat and continuous mixing with equipment such as that described in section 4A4c. 3) cooling. The material discharged after mixing is fed to a cooling conveyor or other cooling device where its temperature is lowered to about 100°F (38°C). 4) crushing. The material is crushed into flake or kibble (large particles). 5) pulverizing. The coarse particles produced are then pulverized by hammer mills or other methods. 6) sieving. The pulverized material is classified by sieving in a screen of 80 to 140 mesh.

M3c3. ***solution method*** - involves manufacture of the coating as a liquid paint and then removing the solvent by either spray drying, devolatizing or flocculation in water.

M4. ***decorating plastic parts with processes that are also common to non-plastics*** - Silk screening, roll coating, electroplating, labeling (except in-mold labeling described below), laser marking, flocking, dyeing, vacuum metalizing, sputtering, polishing and buffing are all described in Chapter 8 of this handbook. Printing (various processes) is described in chapter 9. Polishing and buffing operations for thermoplastics must be carried out with softer wheels, slower speeds and lighter pressures than with metal parts, to avoid overheating the surface of the workpiece.

M4a. ***electroplating of plastics*** - A number of plastics can be electroplated by being treated to make the surface conductive before the plating operation. One way to do this is to plate the part by the electroless method with a thin layer; electroless plating can be used with non-conductive materials. Another approach is to add carbon to the plastic when the part is molded. A third method is to coat the workpiece with a conductive paint. The electroless method involves several steps: 1) acid etching to create a microporous surface, 2) a neutralizer bath to reduce any residual acid, 3) a catalyst bath to deposit palladium in the surface micropores, 4) an accelerator bath to prepare the palladium for electroless plating and, 5) electroless plating with either copper or a nickel-phosphorous alloy. The conductive part is then plated by conventional methods. ABS and PEC (polyphenylene ether copolymer) are the most frequently plated plastics, but polystyrene, ABS/polycarbonate, nylon and polysulfone are also processed. Automotive hardware and trim are often made from plated plastic moldings. A major application is the plating of the circuit paths on printed circuit boards. Epoxy/glass, polyimide, phenolic and Teflon/glass are common substrates. The plating of household faucets, knobs, marine hardware, hospital equipment and kitchenware are other uses.

M5. ***in-mold decorating*** - It is quite feasible to place decorative or other material in a mold so that the item, after molding, is integral with the molded part. Several alternative methods are possible: 1) The mold cavity walls can be coated with another material prior to molding to provide a surface finish on the molded part different from that which would otherwise be achieved. Both liquid and powder coatings are used. 2) product labels can be inserted in a mold before the molding operation and, 3) decorative foils or other objects can also be placed in the mold so that they become part of the finished product. This approach is feasible with injection molding, compression molding, RIM and other molding processes, including those carried out with reinforced plastics. The advantage with coatings is that they eliminate surface porosity, and provide a durable, smooth surface for the part. The advantage with inserted foils and labels is that the inserted object is securely held and, in some cases, increases the strength of the finished part while reducing the amount of material required. The need for later finishing operations is often reduced. Foils with a brushed aluminum or wood grained appearance are common inserts. The inserting operation at the molding machine can be manual or, in many cases, robotic. One early and still common in-mold decorating operation is the use of preprinted, resin-impregnated paper in the molding of melamine dishes and urea and phenolic products. Thermoplastics can also be processed with decorative inserts. Polypropylene, polyethylene, polystyrene, polycarbonate, ABS and acrylics are suitable for in-mold label and foil decorating.

M6. ***sheet and film embossing*** - Several methods are used to produce textures in the surfaces of plastic film and sheet. Such textures change the appearance of the sheet, provide a different feel and can hide other imperfections. One common example of a changed surface of sheet plastic is the modification of flexible vinyl sheets to provide a leather-like appearance. The common method for producing this effect is to run the heated sheet through a pair of cooled forming rolls. At least one of the rolls is engraved with the reverse of the pattern desired on the plastic sheet. When passed through the rollers, the sheet is formed and then cooled so that the texture becomes permanent. Depending on the results wanted, the roll used to back up the engraved roll can be rubber or another resilient material. It can be flat steel or can be engraved to better emboss the sheet or provide some other pattern on the reverse side. Although it is most common to have a heated sheet and cool rolls, sometimes, the sheet is initially cool and is formed by rolls that are heated. Still another method uses formed paper, with a release agent on its surface, in a film casting operation so that the film or sheet as initially made has the texture in it. Sometimes, when deep embossing is desired, the roll is porous and a vacuum is drawn in it. Other methods involve dielectric or frictional heating in small areas of the sheet to aid in forming.

Forming or embossing is sometimes combined with printing a pattern on the surface to enhance the appearance of the texture. *Valley printing*, that is, printing in the depressed parts of the surface, is illustrated in Fig. 4M6 which shows equipment that

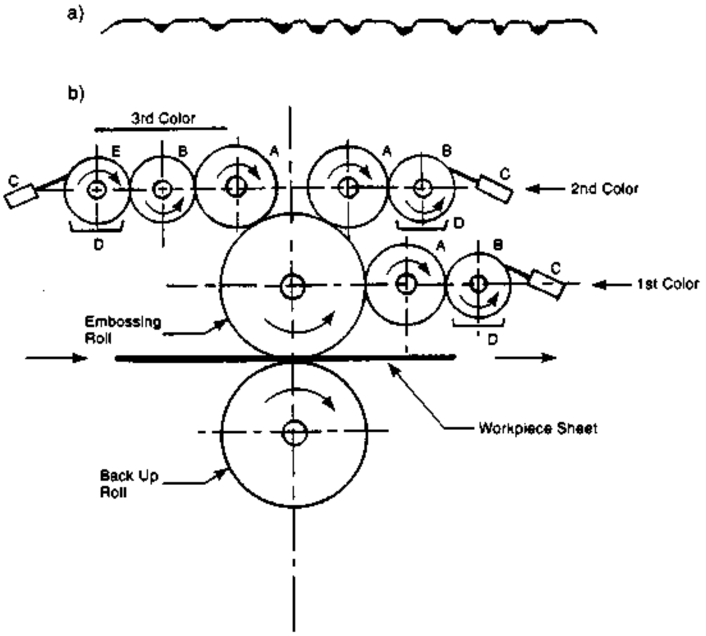

Fig. 4M6 Valley embossing and printing of film or sheet.[2] a) Valley printing - printing in the depressed areas of an embossed sheet. b) Schematic view of combination embossing and valley printing equipment: A - patterned applicator rolls, B - analox rolls, C - doctor blade to remove excess ink, D - ink pan, E - furnisher roll.

embosses and prints the surface in the same operation. This approach is useful in imparting wood grain, textile or leather effects on vinyl, urethane or other plastic sheets.

N. Other Plastics Processes

N1. ***insert assembly*** - Often it is desirable to incorporate metal or other non-plastic components in a plastic part. This is done when strength, hardness, dimensional precision, wear resistance, appearance or some other characteristic can be supplied better by some material other than the base plastic of the workpiece. Perhaps the most common example is the use of metal screw threaded inserts in plastic parts that have other parts attached to them with screw threads. Threaded inserts are particularly advantageous when the part is expected to be disassembled periodically. Inserts can be designed for various methods of insertion and attachment to the base part. Common methods are the following:

N1a. ***molding-in inserts*** - involves placement of the insert in the mold from which the part is made. Plastic material flows around the insert during molding and holds it in place. This method is described above in paragraph C6.

N1b. ***ultrasonic insertion*** - Ultrasonic welding of plastics is described above. (See L4, L5 and L6.) A similar approach can be used to insert a part into a slightly undersize hole in a plastic component. Ultrasonic vibration directed to the insert causes it to vibrate ultrasonically as it is positioned at a hole. Frictional heat softens the plastic and allows the insert to be pressed in. When the vibration stops, the plastic cools and firmly holds the insert in place. The process is for thermoplastics though some thermosetting plastics can be processed. Fig. 4N1b illustrates the method.

N1c. ***expansion installation*** - The insert is designed to be expandable. After it is placed in a molded or drilled hole in the workpiece, it is expanded with a suitable tool or by threading a screw into it. In either case, the walls of the insert spread and bear tightly against the walls of the hole. This is an inexpensive approach but its holding power is not as great as the molded-in or tapped-hole methods.

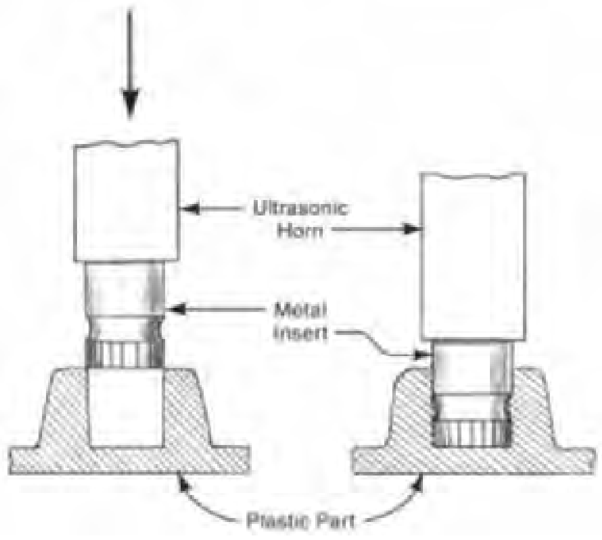

Fig. 4N1b The ultrasonic insertion method for assembling metal inserts to plastic parts.

N1d. ***threaded hole installation*** - The workpiece holes that are to receive the inserts have screw threads molded or tapped into them. The insert - which has external threads - is screwed into place. This method produces an assembly with high holding power.

N1e. ***press insertion*** - With this method, the outer diameter of the insert and the inner diameter of the molded or drilled hole create a press fit between the insert and base piece. Pressing the insert in place is a quick operation but the holding power is inferior to that of molded-in inserts. Some inserts have a spiral track on the outer surface so that the insert travels a rotational path when it is pressed into place. This method is used with harder, more brittle, thermoset plastics.

N1f. ***self tapping*** - Inserts with thread-cutting or thread-forming external screw threads are screwed into unthreaded holes. This approach is a less costly than the use of pre-threaded holes. Holding power is good for pull-out but limited for torque-out resistance.

N1g. ***cemented installation*** - utilizes an adhesive that is compatible with both the base plastic and insert materials to bond the insert into a straight walled hole. Holding power tends to be lower than when inserts are molded in.

N1h. ***hot insertion*** - In this method, the inset is heated to a temperature high enough to soften the plastic surrounding the hole. The insert is pressed into place and the softened plastic flows around knurls on the insert walls, producing good holding power when the plastic cools.

N2. ***other mechanical assembly of plastic parts*** - For assembly operations that are common to plastic and non-plastic parts, see Chapter 7.

N3. ***granulating plastics*** - is the operation that reduces molded sprues, runners and scrap pieces to a size and shape that can be blended and processed easily with virgin material. Then the blended material can be fed to injection molding machines, extruders and other processing equipment. Granulating machines have intermeshing stationary and rotating cutters that sever and recut the pieces fed into the machine until they are small enough to pass through a sizing screen. Pieces to be cut are fed either manually or by conveyor to the granulating machine. Parts too large for feeding to the machine are processed first in a shredder, a large machine with similar cutters but which runs at a lower rate of rotation. Granulating machines are also used to prepare scrap material, including thermoset plastics, for disposal since the granulated material is more compact and easily handled.

N4. ***coloring and blending of plastics*** - The method used for blending colorants into plastic resins varies with the type of colorant used. Colorant blending can be difficult with some materials, particularly organic pigments which are often finer and less dense than the plastic. Dyes - colorants that dissolve in the resin when it melts - are relatively easy to blend. The usual method is to use a tumbling barrel or rotating drum to mix measured quantities of both resin and dye until the dye is well dispersed. Another simple method for the molder is to utilize color concentrates, resin pellets containing dispersed or dissolved colorant. These can be blended in the barrel of the extruder or injection molding machine or tumble mixed beforehand. Blending of other additives and more difficult colorants is described more fully in section A4 above.

N5. ***drying of plastics*** - It is necessary to insure that hygroscopic plastics, notably nylon, PET (polyethylene terephthalate) and polycarbonate, are dried before they are processed in molding or another operation. Other plastics that may gain surface moisture from ambient air are also often dried before further processing. There are two basic approaches in common use: 1) Hot air systems that blow heated air through a silo or other container of the plastic material. This approach, illustrated in Fig. 4N5-1, is limited to plastics that have only some surface moisture. 2) For the hygroscopic plastics mentioned above, a typical dryer uses two or more cylinders of desiccant. While one cylinder is in use, the other is being regenerated or is undergoing temperature change. Drying is effected by blowing warm air through both the resin pellets and the desiccant in a closed, pressurized system. (Pressure is needed to get sufficient air flow through the containers of plastic pellets and desiccant.) Warm air blowing is continued until the desiccant reaches its full moisture content. While this is taking place, another cylinder is being regenerated by blowing much hotter air through it. This hot air, containing moisture, is then exhausted. When sufficient moisture has been removed from the desiccant, it and the cylinder are cooled to normal operating

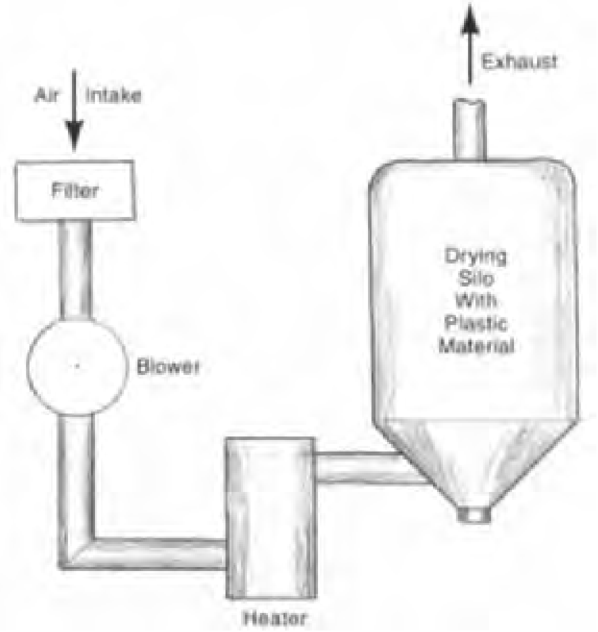

Fig. 4N5-1 A hot-air drying system for removing surface moisture from plastic molding material.

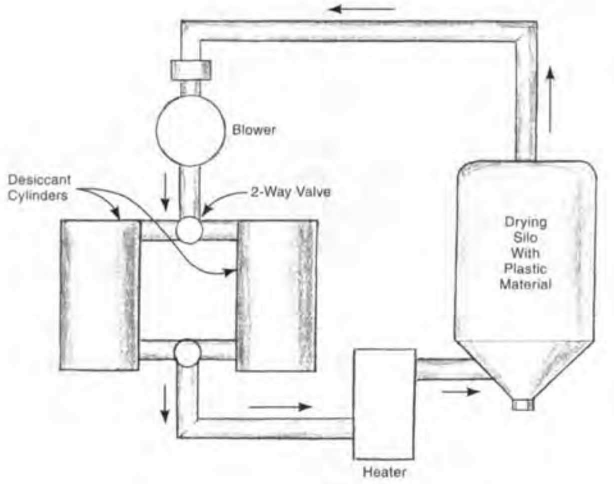

Fig. 4N5-2 A pressurized drying system for hygroscopic plastic molding materials. The desiccant cylinders are used alternately. When the desiccant in one cylinder is saturated with moisture, the system switches to the other cylinder and the first cylinder is subjected to a flow of heated air (not shown) to redry the desiccant it contains.

temperature and are ready for reuse. Fig. 4N5-2 shows this method.

N6. ***machining of plastics*** - Both thermosetting plastics and thermoplastics are machinable with conventional metal-working equipment (See chapter 3). However, the special properties of plastics require different machining techniques. Additionally, not all plastics are alike. What works well for one material may not give good results with another. The following are differences in properties of plastics, compared to metals, that must be reckoned with: 1) Thermoplastics are normally softer, more difficult to clamp securely and more apt to deflect from cutting pressures. Workpieces must be well supported. 2) Plastics do not conduct the heat of cutting friction well and may overheat at the point where cutting takes place. 3) They have a thermal coefficient of expansion about 10 times that of most metals and therefore are more apt to distort from the heat of cutting. The result of most of these factors is a less accurate final machined workpiece. The following steps are usually taken to get best results: 1) Tools are kept very sharp 2) Rake angles of tools are positive and larger than for most metals 3) Tool surfaces touching the workpiece are fully polished to reduce friction. 4) Where possible, chips are long and continuous. Filled and reinforced thermosetting plastics may be abrasive to cutting tools and may create dust that can damage machine ways and be a health hazard.

N7. ***trimming and die cutting of plastics*** - trimming is a common operation after various plastic molding and forming operations. Fig. 4N7 illustrates three different die designs for such operations. The die in Fig. View a) is a simplified view of the type of die used for blanking and

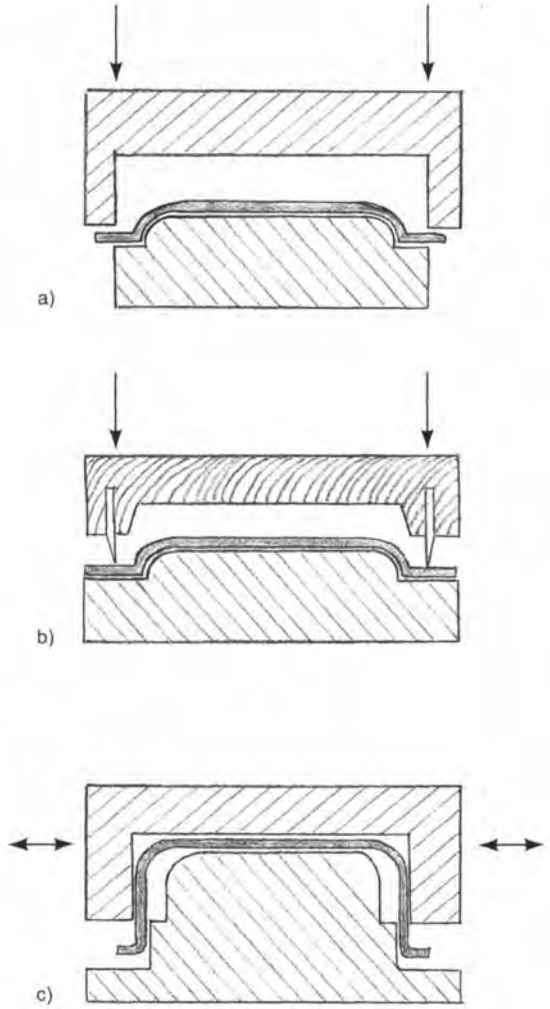

Fig. 4N7 Three different dies used to trim formed and molded plastics parts: a) A simplified view of a production blanking or trimming die, b) A steel rule die, c) The upper half of the die has a planetary movement in a side-to-side direction, to trim the side walls of the workpiece.

trimming metal workpieces and is described further in sections 2C4 and 2C6. Steel rule dies, shown in view b), are described more fully in section 2C4a. Dies of this type are used extensively in blanking and trimming softer materials. The die shown in view c), which oscillates horizontally, is called a planetary die and is useful for trimming vertical walls.

N8. ***radiation processing***[2] - is being increasingly used in plastics processing for curing thermosetting materials, cross-linking thermoplastics and making graft copolymers. Sterilization of medical products is another application. Two basic methods are available for providing ionizing radiation that can produce these desirable effects: 1) gamma ray and other radiation from radioactive isotopes, and 2) electron beam radiation from equipment-produced particle acceleration. In all cases, the production sequence is established so that, at some stage of the sequence, usually a production line in large-quantity situations, the workpieces are subjected to the radiation which produces a change in the properties and/or state of the workpiece material.

Crosslinking thermoplastics (Polyethylene is the most common thermoplastic given this treatment.) gives these materials improved properties: improved tensile strength, higher temperature resistance, improved chemical and weather resistance and reduced dielectric losses. Wire coatings, including foam insulation of coaxial cable, are given gamma ray or electron-beam radiation to produce crosslinking with its better strength. Crosslinked material also gains elastic memory. Components stretched after crosslinking will return to their pre-stretched state upon heating. Heat shrinkable tubing and film are made this way.

Graft copolymers are made by radiation of a homopolymer in contact with another homopolymer or monomer. The linkage is with the side chains of the material's backbone, providing a retention of the homopolymer properties plus the enhancement that the other polymer provides. Permeable film used in desalinization equipment is made by this method.

Electron beam radiation is used to cure paint coatings without the need for heating. This method is often advantageous with thermoplastic substrates that may not be able to withstand the heat of a paint curing oven. Painted plastic automobile body components are often treated with this approach.

Wood and concrete components are impregnated with plastics to provide improved properties. They are harder, stronger and more wear resistant than the unimpregnated equivalent components. The base materials are dried thoroughly with the aid of vacuum and heat, are impregnated with a plastic in liquid monomer form, and are exposed to either radioactive or electron-beam radiation.

N8a. ***non-ionizing radiation processing*** - involves radiation from ultraviolet, infrared, dielectric, microwave and induction sources. It is usually accompanied by some degree of heating which may, in itself, promote reactions in the plastic material. The process is used for crosslinking thermoplastics and curing of thermosets. Induction, microwave and dielectric methods are heat producing and are convenient means of applying heat selectively or quickly for bonding, localized curing, preheating for molding, sealing, and other molding, forming, or joining applications.

N9. ***vacuum handling and loading of plastic materials*** - is the most common method for short-distance transportation of plastic materials in pellet or powder form from storage containers to machine hoppers. This kind of movement can be accomplished with relatively low-power, compact equipment at each machine. Portable vacuum/pump units convey material at the molding machines from shipping containers directly to machine hoppers and do so automatically as material is needed. Some systems have intakes from both regrind and virgin material containers, and automatically feed the prescribed portion of each material. Similarly, color concentrates and other colorants can be metered into the material fed to the machine hopper. In some equipment, a color-virgin material blender is incorporated at the machine hopper.

For longer distance movement of plastics, vacuum equipment with positive displacement pumps to provide the vacuum is also used. For high production applications and a common material, a central vacuum pump with valves and piping for all machines is used. A central computer interprets sensor reading at each machine and, by controlling the vacuum pump and valves, delivers the needed amount of material to each machine. Material is also unloaded from incoming rail car or truck shipments in bulk using vacuum conveying equipment.

N10. ***robotic handling*** - is becoming more common in injection molding operations. Robots are used for removal of finished parts, sprues and runners from injection molds, to position parts for subsequent operations, and to perform some secondary operations. For some operations such as sprue removal, simple mechanical robots are often adequate. For more complex operations involving obtaining and placing inserts or handling, removing, stacking or packing finished pieces, more sophisticated computer-controlled robots are required. (Removing parts often requires a more complex operation than sprue removal because more extensive motions after removal are included.) The most complex robotic operations involve sensors, continuous path computer control and sophisticated programs. They can provide fully automatic operation of an injection molding machine. See Fig. 14G5.

N11. ***deflashing*** - is necessary after a number of molding operations for both thermoplastic and thermosetting plastic parts. The deburring and deflashing methods described in Chapter 3 of this handbook are generally applicable to plastic and elastomer parts. Of particularly interest is cryogenic deflashing, described in 3K25.

N12. ***reel-to-reel molding (continuous strip molding)*** - is an automatic insert molding process. Prior to the molding operation, the insert is blanked and formed from metal strip but is not severed from the strip, which is wound on a reel. The strip is then fed from the reel into the injection molding machine, which molds plastic material around the insert. The metal strip is precisely indexed in the injection molding machine. The individual molded parts are not separated from the strip during or immediately after molding. Instead, the strip of molded parts is wound onto a take-up reel. The major use of the process is for small electronic components which are not separated from the strip until they are automatically assembled to circuit boards or other components. The process requires high volume production to amortize the costs of the equipment required. Connectors, dip switches, shunts and other devices are the most common applications but medical devices, toys, and other products may also make use of the process. The molded part may include several stamped components. Wire may be used instead of strip in some components.

O. Rubber and Elastomers

O1. ***natural rubber***^{A} - is produced from latex, the sap of the rubber tree. (See *latex*) To make rubber from latex, the rubber is separated from the latex fluid by coagulation. This involves the addition of formic acid or other acids or salts to the latex. The rubber particles coagulate into a dough-like material which is then easily separated. This material is then milled into sheets to remove contaminants and to facilitate drying. The sheets are subjected to wood smoke to kill bacteria and become the crude rubber that is shipped to processing plants.

The rubber sheets are cut into granules by a series of shear and rotating knife cuts and are dried in mechanical drying equipment over a period of several hours. The rubber is then softened so that various additive ingredients can be blended in. The most common softening method is the use of large mixers with eccentrically shaped blades that work the rubber against the mixer walls. Typical mixing lot sizes are one quarter ton. After mixing has softened the rubber, carbon black (which functions as a filler), vulcanizing chemicals (sulfur or sulfur compounds and accelerators), oil, a vulcanization accelerator and a protective antioxidant are added and mixed into the batch, either in the same mixer or with mixing rolls. The rubber is then ready for molding or extrusion into useful shapes.

Vulcanization of rubber takes place from the heat of the molding or forming operation when it is made into the desired product. Vulcanization temperatures range from 285°F to 360°F (140°C to 180°C). Vulcanization with 3 to 6% sulfur cross-links the molecules so that the rubber no longer will melt when heated and will maintain its flexibility over a wide temperature range.

Rubber is made into a wide variety of consumer and industrial products. Most of these use both natural and synthetic rubber. Vehicle tires are a major rubber product. Other uses are: hoses, balls for various games, electrical insulation, shoe soles, seals for building panels and for doors and windows of buildings and vehicles, seals and belting for machinery, floor tile, coatings, and adhesives.

O2. ***rubber, synthetic***[4] - Synthetic rubbers, often referred to as *elastomers*, are plastic materials, similar in structure to other plastic materials. However, they have the ability to stretch to at least double their length and to return almost immediately to the original length or close to it.[2] Much more synthetic rubber is produced in the world at this time than natural rubber. Styrene-butadiene rubber (SBR) is, by far, the most common synthetic rubber. It is also referred to as Buna-S and GR-S.[2] Other synthetics are: butadiene, ethylene-propylene, butyl, neoprene, nitrile and polyisoprene rubbers.

The manufacturing processes for these rubbers have much in common. The monomers that are reacted all can be handled similarly and the process equipment for one particular rubber is usable for several others. The process illustrated in Fig. 4O2 for making styrene-butadiene copolymer rubber is therefore quite typical for all the synthetic rubbers. The sequence starts with two separate sub-processes, one which produces styrene monomer and the other, butadiene monomer. Butadiene monomer is shown being made with the one-step Howdry process from *n*-butane with aluminum and chromium oxide catalysts. The butadiene thus produced is then purified by adsorption with cuprous ammonium acetate. The styrene is made from ethylbenzene

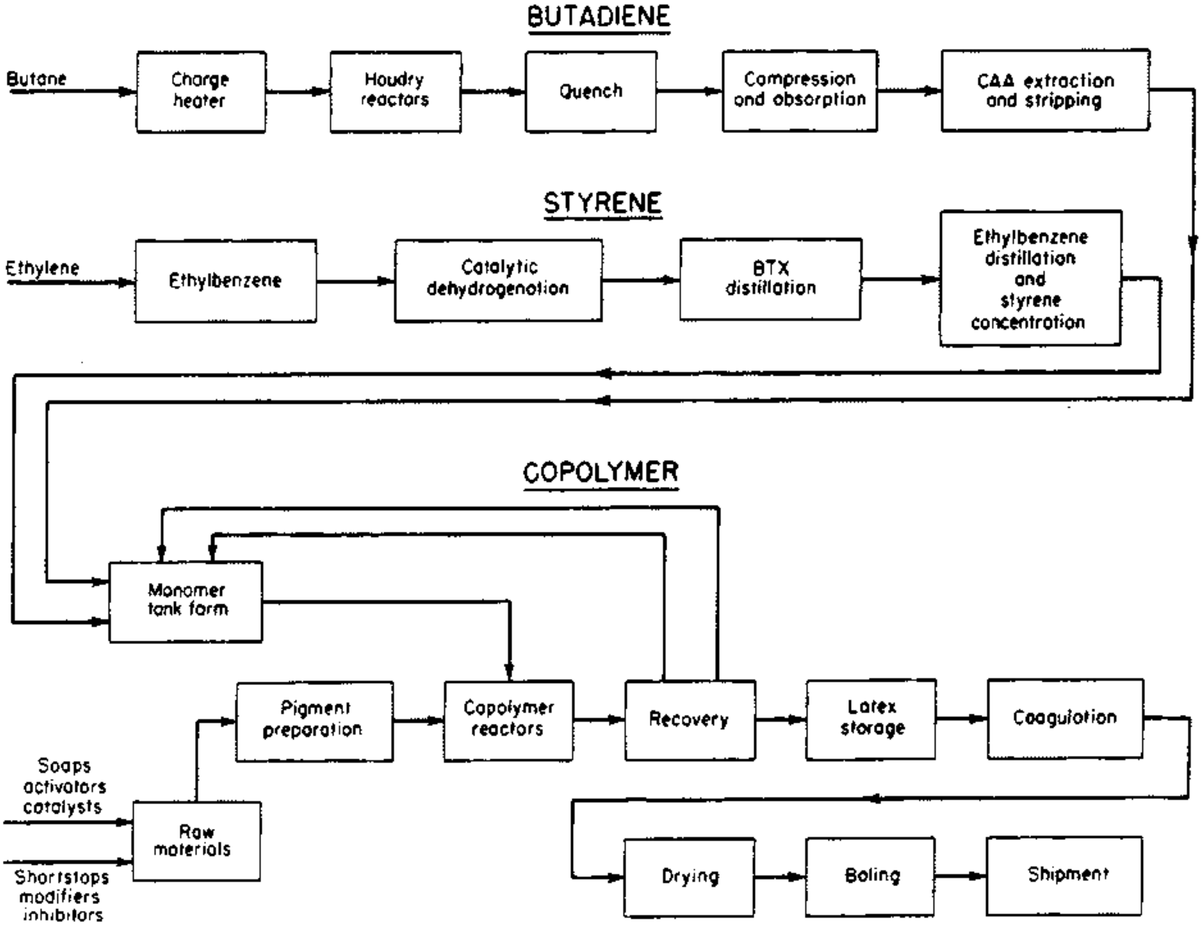

Fig. 4O2 The manufacturing sequence for styrene-butadiene rubber (SBR) showed in a simplified flow chart.

which results from alkylating benzene with the butane raw material. It is then dehydrogenated to styrene over an aluminum chloride, solid phosphoric acid, or silica-alumina catalyst. Then the monomers are fed into a polymerization reactor along with some additives and a catalyst. The proportion of each monomer varies somewhat, depending on the planned application, but 70 to 75 parts butadiene and 25 to 30 parts of styrene is typical. The emulsion polymerization reaction takes place for 8 to 12 hours at a temperature of 41°F (5°C). The heat of polymerization is removed from the reactors with cooling coils. Following polymerization, which is partial, unpolymerized monomers are returned to the reactor. Polymerized material proceeds through several physical steps to put it into usable form.

Neoprene is a product of coal, limestone, salt and water. Calcium carbide, from coal and limestone is reacted with water, forming acetylene gas (C_2H_2). The gas is reacted with hydrogen chloride to form chloroprene which is then polymerized to make neoprene.

Urethane, polysulfide, chlorinated polyethylene and silicone elastomers have superior properties for some applications where rubber-like material is needed. Urethane is used for forming pads for press forming of metal, solid tires, rollers and shock absorbing pads and bumpers. SBR rubbers are used extensively for tires and also for shoe soles, floor tile, in mechanical applications and as latex which becomes adhesives and coatings. Nitrile rubbers have particular resistance to oils, water, salts, soaps and most foods and are used in equipment where such resistance is important. Neoprene is used for automotive parts, adhesives, sealants, shoe soles, o-rings, bellows, conveyor belts, printing rolls and coatings. Butyl rubber is used for linings of tubeless tires, for innertubes, steam hose, tank lining and weatherstripping. Silicone rubbers are used for o-rings and seals for high temperature and corrosive conditions.

O3. ***rubber compounding***[4] - Both natural and synthetic rubbers are seldom used without additives as part of their formulation. The additives are needed to impart the necessary strength, elasticity, toughness, degree of hardness and abrasion resistance. Additionally, all natural rubbers require vulcanization, usually with sulfur compounds and many synthetic rubbers are similarly processed. Accelerators speed up the vulcanization. Antioxidants are added to improve the life of the rubber product. Fine powder fillers are added to reduce overall cost and improve hardness and shape retention. Carbon black and silica fillers, however, actually provide greater strength and improved abrasion resistance and resilience. Pigments may be included to provide the desired color of the rubber product.

The first step in compounding is *mastication*. The operation is normally performed in a Banbury-type mixer (Fig. 4A4c). The rubber is sheared repeatedly, breaking down molecules, and providing easier flow. Mixing of the additives and rubber then follows.

O4. ***rubber fabrication methods*** - are very similar to those used with plastics, particularly thermosetting plastics. Molding is usually by compression or transfer molding techniques. Injection molding is also used, particularly for thermoplastic elastomers. Calendering is used to provide rubber coatings on fabrics. Extruding is used extensively in the manufacture of weatherstripping, hose, innertubes and tire components. Another processing method used with rubbers is dipping wherein a master form is immersed in a liquid formulation of rubber or elastomer (natural rubber latex, neoprene, silicone or vinyl plastisol). The form is removed and the liquid that adheres is permitted to dry. Dipping and drying are repeated to build the coating to the needed thickness. The operation may be aided by using electrostatic charges, speeding the attraction of the liquid and providing thicker coatings with each dip. The dipping method produces uniform wall thicknesses and is used for boots, gloves and fairings[5]. Some flat rubber parts for seals and pads are made by die cutting sheet rubber material with steel rule or other simple dies. (See sections above for descriptions of these processes. Also see *tires, rubber.*)

References

1. *Plastics Handbook,* edited by Modern Plastics Magazine, McGraw-Hil, New York, 1994.
2. *Plastics Engineering Handbook of the Society of the Plastics Industry,* Inc. 5th ed., Michael L. Berins, editor, Van Nostrand Reinhold, New York, 1991. ISBN 0-442-31799-9.

3. *Encyclopedia of Polymer Science and Engineering*, John Wiley and Sons, New York, 1986.
4. *Encyclopedia of Chemical Technology*, Vol. 16, 4th ed., John Wiley and Sons, New York, 1995.
5. *Materials and Processes in Manufacturing*, 8th ed., E.P. DeGarmo, J. Black, R. Kohser, Prentice Hall, Upper Saddle River, NJ, 1997.
6. *Design for Manufacturability Handbook*, 2nd ed., J.G. Bralla, ed., McGraw-Hill, New York, 1999.

Chapter 5 - Glass and Ceramic Processes

"Glass is an inorganic product of fusion which has cooled to a rigid condition without crystallizing." - American Society for Testing Materials Committee C-14[1]

A. Glass Processes

A1. ***basic glassmaking*** - Glassmaking involves three basic steps: batching, melting, and forming. Batching is the preparation of a mixture of sand and stabilizing oxides, all in fine granular form. Melting involves the heating of the mixture to change it into a liquid and to further homogenize the various ingredients. Forming is the creation of useful objects or products from the molten mixture before it has completely solidified. The process can be carried out on either a batch or continuous-flow basis, the latter being used in mass production situations. Normally, forming operations take place immediately after the basic glassmaking, with the molten glass being cooled to increase its viscosity for forming.

There are many different kinds of glass. Soda lime glass is used for bottles, window panes and drinking glasses. Lead-alkali silicate glass has lead oxide in place of much of the calcined lime and is used for highly worked shapes including decorative glassware ("lead crystal") that is engraved. Borosilicate glasses, which contain boric oxide, are used when chemical and temperature change resistance is important, for example, in pharmaceutical containers, chemical process components and lamp envelopes. Aluminosilicate glasses are used where high temperature conditions exist. Several other mixtures may be used when optical properties are important.

A1a. ***raw materials*** - Silica sand (SiO_2) is the most common glass ingredient and has excellent resistance to attack, low thermal expansion, and resistance to devitrification (crystallization which impairs the optical and mechanical properties). However, in its unalloyed state, silica sand is difficult to process because of its high melting temperature and high viscosity when melted. Various other oxides are added to silica to improve its processibility and modify the properties of the finished glass. When soda-lime glass, the most common variety, is made, the ingredients consist of about 73 percent sand (SiO_2), about 14 percent soda ash or sodium carbonate (Na_2CO_2) and about 13 percent limestone ($CaCO_3$). Sodium oxide, (Na_2O) is an effective fluxing agent, i.e., a means for reducing the melting temperature, but too much can produce glass that is water soluble. Calcium oxide, calcined lime (CaO), increases the hardness and resistance of the glass to moisture. Alumina (Al_2O_3) improves durability and reduces thermal expansion. Potassium oxide (K_2O) from potash, increases durability and helps prevent devitrification, which has adverse effects. Other glass ingredients include borax or boric acid for boric oxide (B_2O_3), fluorspar (CaF_2), litharge or lead oxide (PbO), barium carbonate ($BaCO_3$), magnesium oxide (MgO), zinc oxide (ZnO), and other inorganic materials, some of which are colorants. Glass cullet (factory scrap or recycled glass), may be added to the mixture. It provides fluxing action and reduces the energy required for melting. About 30 to 40% cullet provides the maximum furnace efficiency[2]. In some mixtures, cullet content can reach 66 percent[3]. A typical commercial mixture has from 7 to about 12 different minerals, 4 to 6 of which are major ingredients[3].

A1a1. ***coloring materials*** - Glass is colored by adding small quantities (usually less than 0.5 percent) of certain metal oxides or other metallic compounds to the glass batch. Copper produces light blue; chromium - green and yellow; iron - bluish green or yellowish brown; cobalt - intense blue; nickel - grayish brown, yellow, green, blue or violet depending on the glass matrix; neodymium - reddish violet; manganese - violet; vanadium - green or brown[2].

A1b. ***batching*** - involves weighing, milling as necessary, and mixing to produce the glass furnace charge, a blend that can be melted to provide the composition desired. Quality control, including chemical analyses, must precede these steps to insure that each raw material is of the proper composition with impurities within limits. and of the proper grain size. Grain or particle size is important and must be controlled so that materials do not segregate during mixing, storage, and handling and so that they melt properly. Overly-fine particles of some materials may retard the elimination of gas bubbles from the melted charge. Milling and screening of raw materials may be required for some mixtures, though the common practice is to have suppliers of raw materials provide them with the desired grain size and size distribution. Milling and crushing methods are described in Chapter 11. Water may be added to the batch to the extent of 2 to 4 percent to prevent segregation prior to melting.

More recently, methods have been developed to consolidate the batch material in a form that more easily preserves the uniformity of the batch mixture, provides easier handling, improved melting, and better uniformity of the glass mixture during melting. These consolidation methods usually involve the following steps:

1. reducing and controlling the grain size of the batch materials by various milling operations and screening,
2. adding wetting and binding agents to the mixture,
3. thoroughly mixing the mixture and additives,
4. consolidation - briquetting, pelletizing or other means of holding the mixture into a stable but easily handled form, and
5. preheating the consolidation before melting.

A1c. ***melting*** - Melting the glass materials, known as the batch, enables the ingredients to be completely blended to produce glass of the desired properties and puts the glass in condition for forming. Typical melting temperatures are approximately 2640 to 2900° F (1450 to 1600° C). Heat is provided by gas, oil or electricity. Natural gas is the major fuel; propane is used as a standby. When quantities are small, melting is performed on a batch basis in pot furnaces or day tanks. High production melting is done in continuous furnaces that have output levels ranging to several hundred tons per day. Pots are made of refractory clay and are heated in brick furnaces. Day tanks are larger pots for batch production and are typically run on a one-day cycle, with melting at night and production and refilling the next day. Ten tons is a typical daily production quantity. Pots are typically round crucibles made of one piece of refractory material with individual capacities of one to two tons of glass. Several pots may occupy one furnace. Day tanks are made from refractory blocks.

Continuous furnaces are used for flat glass and for mass-produced containers and other high-production items. They are lined with refractory ceramics and are divided into a large melting section and a small refining section called a forehearth. The forehearth is used to cool glass from the melt temperature to a suitable temperature for whatever forming operation follows. Daily production levels are on the order of 100 to 400 tons of glass. The glass charge is fed from one end of the melting area. Temperatures in the melting area are as high as the glass mixture can tolerate in order to drive off carbon dioxide, steam, trapped air, and other gases, which could cause bubbles in the glass. Convection currents in the molten glass, which result from natural unevenness of heating and cooling from side walls, provide stirring that helps the glass mixture to become homogeneous. The molten glass that passes to the refining section does so through an opening below the surface of the melt, thus preventing any surface foam or scum from entering the forehearth. The temperature in the forehearth is typically cooler than that in the melting section by 180 to 360°F (100 to 200°C).

Furnaces may operate continuously for approximately a year before rebuilding is necessary. With gas and oil furnaces the glass is heated by exhaust gases that travel above the molten glass. Air for combustion is preheated by either a preheating chamber in the furnace or by regeneration where the cold air and cold gas are made to flow through brickwork that shortly before carried hot exhaust gases from the furnace. The flow is typically reversed at half-hour intervals. Immersed electrodes are used when heat is provided by electrical resistance. This resistance is that of the glass when current is passed through the molten glass from electrode to electrode. Electric heating is sometimes used as a booster in gas- or oil-fired furnaces. Electrical heating has quality and environmental advantages and is more common for batch production of specialty glasses, particularly those with a volatile component. Electrical induction heating is used for small quantity work.

Fig. 5A1c illustrates a typical glass pot furnace (a), a melting tank (b), and an electric heating system (c). Fig. 5A1c-1 shows a typical continuous furnace.

A2. *primary forming processes*

A2a. ***pressing*** - A "gob" of molten glass is placed in a mold by an automatic gob-feeding machine. A plunger descends and presses against the gob of glass which flows upward around the plunger and outward to fill the mold cavity. When the glass cools and solidifies, the plunger is withdrawn, the mold is opened, if necessary (because of undercuts in the part), and the part is removed. In some cases, excess glass may have to be trimmed from the part. The process is illustrated by Fig. 5A2a. In production situations, a turntable is used to carry the molds and may have as many as twenty. As the turntable indexes to new positions, each mold proceeds step by step through the full cycle of loading, pressing, cooling, trimming, and ejection or removal. Pressing is used to make drinking glasses and other household glassware, lenses, lamp globes, and TV tube parts.

A2b. ***blowing*** - is similar to blow molding of plastics. As in blow molding of plastics, there are two operations, one to make the parison and the other to make the hollow glass object from the parison. The operation can be manual, with or without a mold to control the shape of the finished part, or automatic with a number of process variations. Hand blowing into the open air, without a mold, but with shaping of the bubble with the aid of hand tools, has been practiced for centuries. The basic process with molds is illustrated in Fig. 5A2b. Blowing is used extensively in the production of glass bottles, containers, and vases and jars.

A2b1. ***manual blowing*** - The skilled artisan uses a glassworker's blowpipe consisting of a metal tube with a wooden handle and mouthpiece at one end and a nose or gathering head at the other end. Making a container, vase, drinking glass, etc. with purely manual methods, involves the following steps:

1. Gathering - The nose end of the blowpipe is immersed in melted glass and is rotated slowly. The viscous glass sticks to the end of the blowpipe. For large objects, several repeats of gathering may be required.
2. The blowpipe is continually rotated to keep the gob of glass centered and the artisan blows a small amount of air from the mouth through the pipe, making a bubble in the center of the glass gob and thereby creating a parison.
3. Marvering - The parison (hollow gob) is rolled against a surface of metal or stone or wet wood, cooling the surface and imparting a straight or curved side to the object.
4. The parison is enlarged by further blowing.

Further contact of the parison with the work surface and with hand-held shaping tools in a series of steps, gradually produces the desired shape. Some reheating may be required and continual rotation of the blowpipe is carried out to keep the workpiece circular and centered. Selective cooling or heating, cutting with shears, and attachment of glass handles or other elements may be carried out before the object is completed. Fig. 5A2b1 illustrates a typical sequence in making a glass pitcher. Fig. 5A2b1-1 shows a collection of glassblower's hand tools.

For repetitive blowing of some particular object, the glassworker may blow the parison into a mold made from water-soaked wood (beechwood has been traditionally used), graphite, or cast iron. This reduces or eliminates much of the tool and workpiece manipulation required, speeds the operation, and reduces the skill required by the glassworker. Because of the high level of skill required, the use of manual methods of blowing has declined in favor

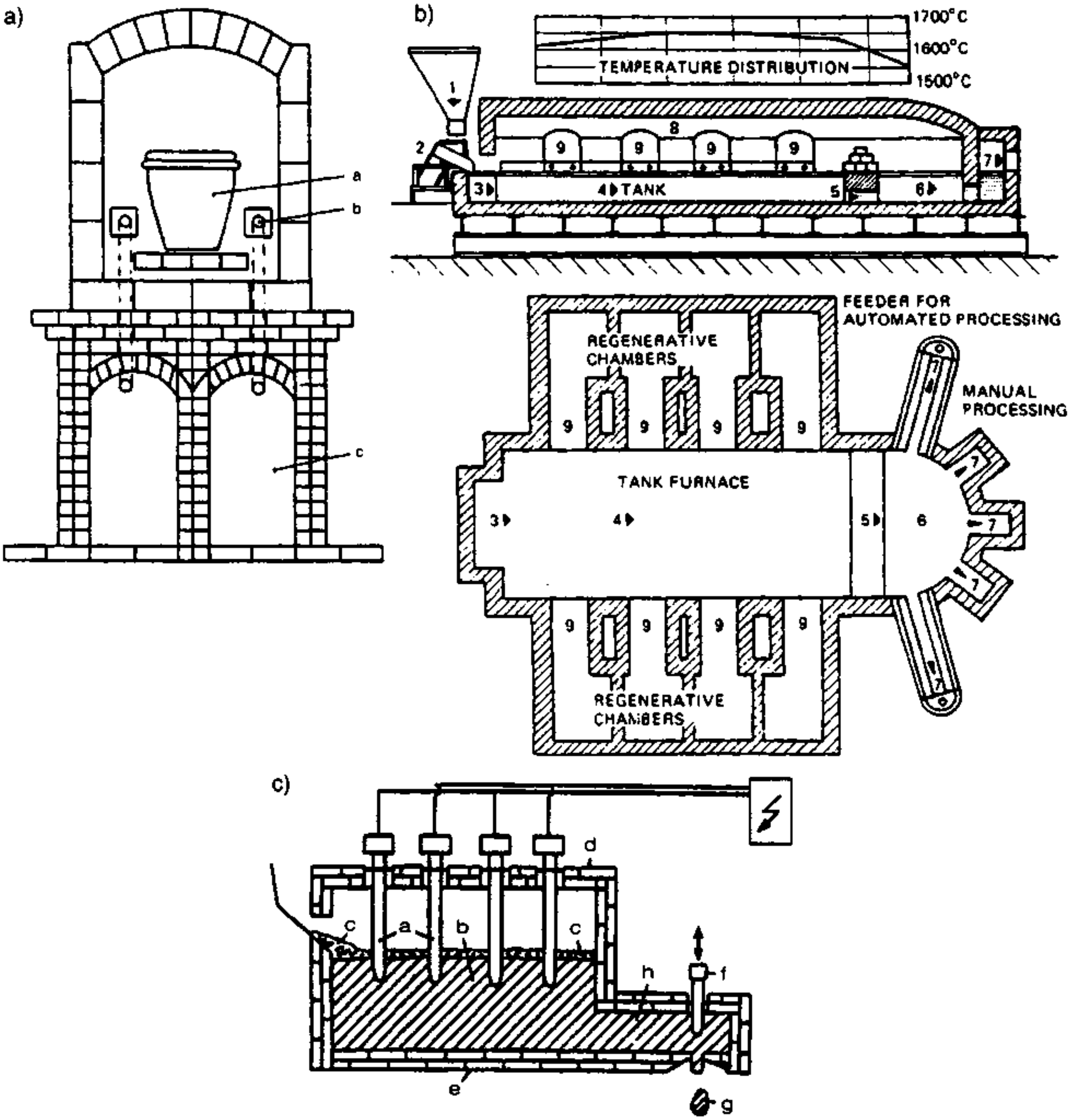

Fig. 5A1c Illustration of glass melting processes:
(a) schematic view of a pot furnace: a - melting pot, b - burners, c - regenerative chambers for heat recovery.
(b) schematic of cross section and floor plan of a melting tank: 1 - hopper for glass batch, 2 - feed chute, 3 - batch feeding compartment, 4 - melting and refining tank, 5 - "doghole" (tank throat), 6 - forehearth, 7 - molten glass feeder for either manual or automatic processing, 8 - crown or roof of the melting furnace, 9 - burner ports in pairs for combustion gas and flue gas.
(c) schematic of electrically heated tank: a - platinum electrodes, b - molten glass, c - batch of unmelted materials, d - crown, e - tank bottom, f - plunger for gob feeding, g - gob of molten glass, h - forehearth. (Courtesy Schott Glas.)

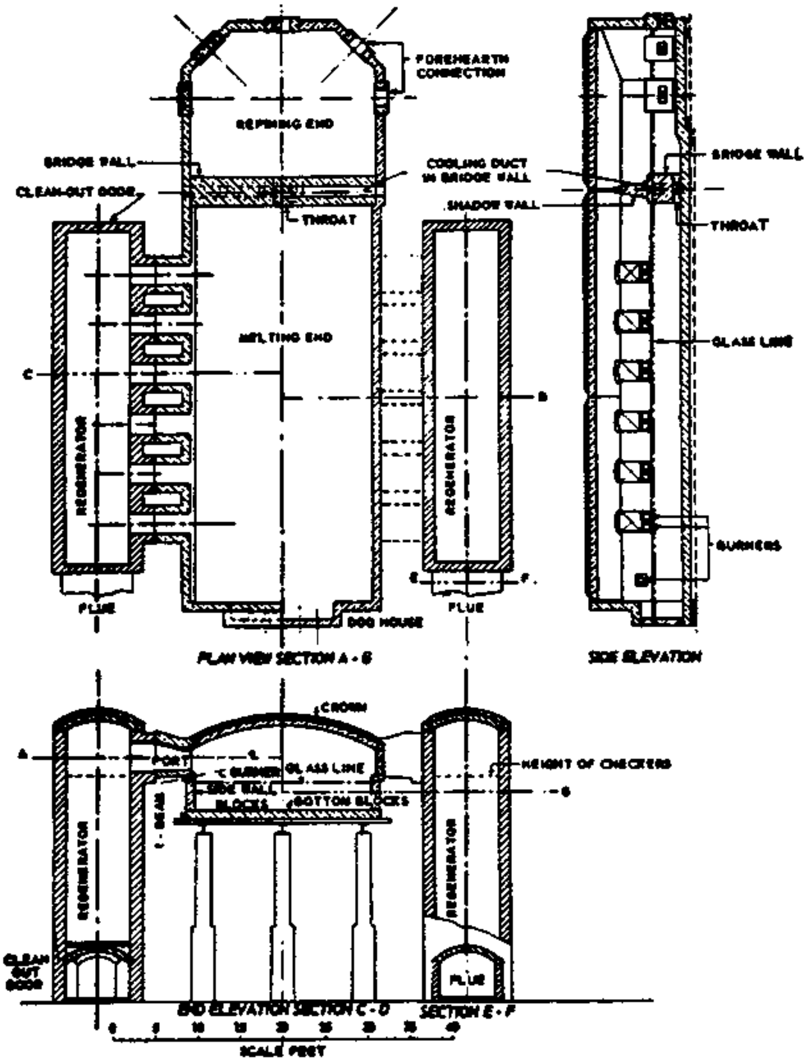

Fig. 5A1c-1 A continuous glass melting tank of 350 tons capacity. (from Glass Engineering Handbook, E.B. Shand, McGraw-Hill, New York, 1958.)

of machine blowing except for artistic work. The method is still used for art work, prototypes, and small quantity production of bottles, containers, laboratory vessels, and other specialty glassware.

A2b2. ***lampworking (lamp blowing, and scientific glass blowing)*** - is the forming of glass articles from tubing and rods by heating in a gas flame ("lamp"). The operation is essentially manual, but differs from the manual glass blowing described above in that it starts with a tube or rod rather than a gob of molten glass. Its primary application is the fabrication of laboratory apparatus and instruments. Medical, veterinary, food processing, and chemical industries require apparatus that use glassware made with this approach. The tubing or rod is heated by a gas flame and then formed by any of a variety of manual operations including blowing, bending, flaring, cutting, sealing, joining, and working with a large number of hand tools.

In higher production situations, the end of a glass rod is heated and placed in a die that presses the softened material into a small part and severs it from the rod. Tubing can be similarly heated at the end, which

Fig. 5A2a Glass pressing with three mold variations: A - with a block mold, B - with a split mold, C - with a font mold. In C, excess glass on the part must be trimmed after pressing. (from Glass Engineering Handbook, E.B. Shand, McGraw-Hill, New York, 1958.)

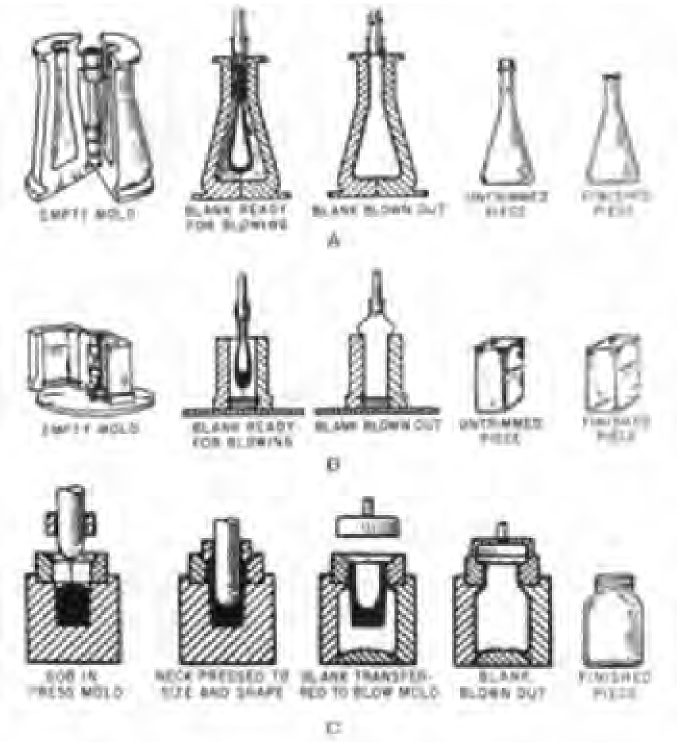

Fig. 5A2b Glass blowing with three process variations: A - with a paste mold, B - with a hot-iron mold, C - the press and blow method (also illustrated in Fig. 5A2b3e.) (from Glass Engineering Handbook, E.B. Shand, McGraw-Hill, New York, 1958.)

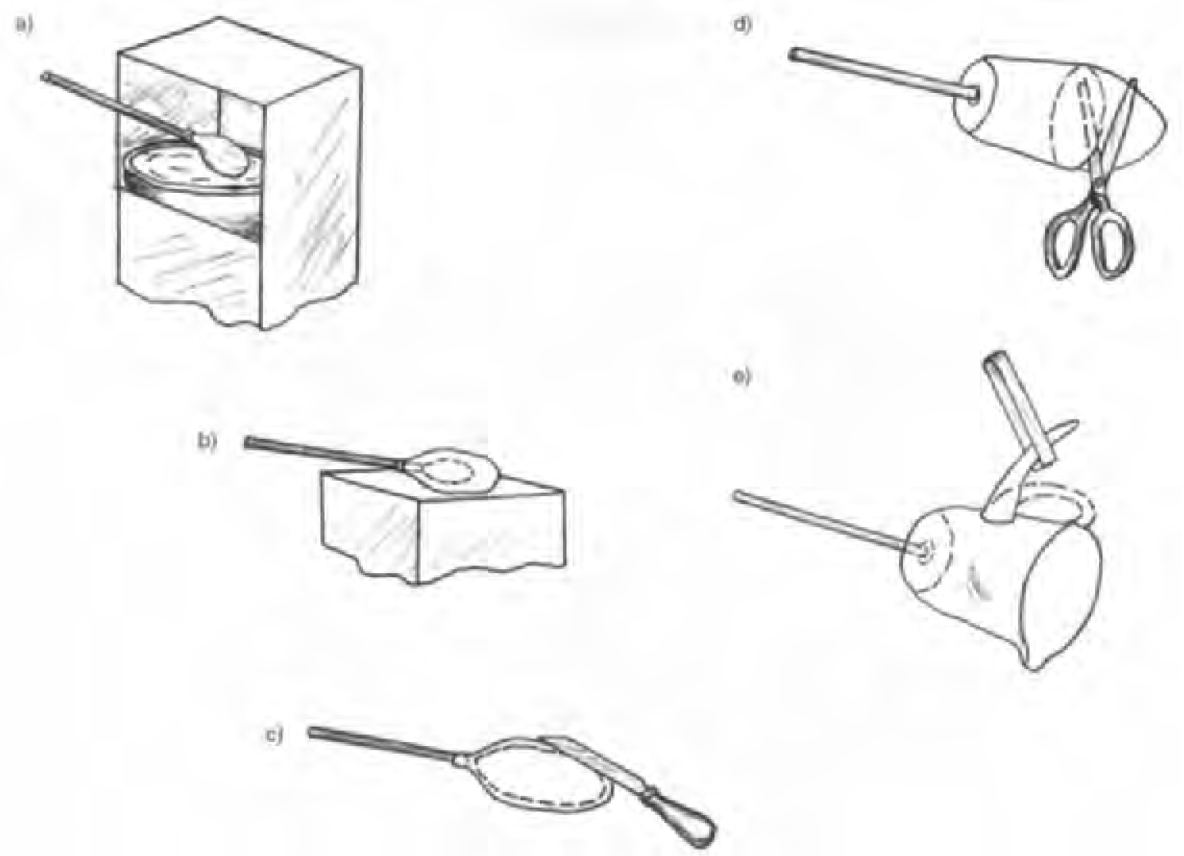

Fig. 5A2b1 forming a glass pitcher using manual methods. a) A gob of molten glass is gathered at the end of the blowing iron. b) An internal bubble is blown and the hollow gob is shaped by "marvering" or rolling on a flat surface. c) The gob is further blown to uniform thickness while being shaped with hand tools. d) The blowing iron is removed and the glass is fastened to a "punty iron" at the other end. Additional shaping with hand tools takes place and excess material is removed with hand shears. e) A pouring lip is formed and a second small gob of glass is formed to be a handle and is attached. The punty iron is removed.

can then be formed by blowing in a suitable mold. Scientific glass blowing has broadened in recent years to include working with flat and powdered glass as well as tubing and rods, and working with a variety of glass types and surface treatments.

A2b3. ***machine blowing*** - Automatic machine blowing is used in the production of glass bottles, jars, drinking glasses, and other glass containers that are manufactured in mass-production quantities. Machine blowing methods have the following elements:

1. equipment for feeding a gob of melted glass to the machine,
2. a means for converting the gob into a parison, i.e., introducing a hollow in the gob for later blowing,
3. inflation of the hollow gob (parison) against the inner surfaces of a mold,
4. a means for forming the elements at the open end of the object molded,
5. a means for trimming any excess material from the finished object, and,
6. annealing the finished product.

Material in process may be reheated during the operation sequence. Notable machine methods are the "press-blow", "blow-blow", "suck-blow" and "rotary-mold (paste mold)" processes.

Fig. 5A2b1-1 Hand tools commonly used by glass blowers.(Courtesy Corning, Incorporated, corporate archives.)

A2b3a. ***gob feeding machine*** - In this machine, the feeder is integral with the forehearth of the melting furnace. A typical machine has the following elements to provide suitable gobs of molten glass for the blowing machine:

1. an orifice in the bottom of the forehearth,
2. a plunger or needle to push the gob through the orifice,
3. a rotating tube around the plunger to control the amount of molten glass in the gob,
4. shears to sever the gob from the other material that passes through the orifice.

The gobs fall by gravity directly into the molds of a rotary blowing machine or into a chute that carries them to the machine molds. Operation of the gob feeder, which is timed to the speed of the blowing machine, is illustrated in Fig. 5A2b3a. Gob feeding machines are also used to provide material for pressing machines.

A2b3b. ***Owens bottle machine (the suck-blow process)*** - The original machine developed by M. J. Owens was put into production around 1904 but has been much further developed since then. The glass is brought into the parison mold by suction, hence the name, suck-blow process. The work is performed on a large rotary table. Motion of molds and other elements is controlled by cams. The operating sequence is as follows:

1. The parison mold, with an open bottom, is lowered into the surface of molten glass. Suction applied to the top of the mold draws glass into the mold cavity. A pin with a rounded end puts

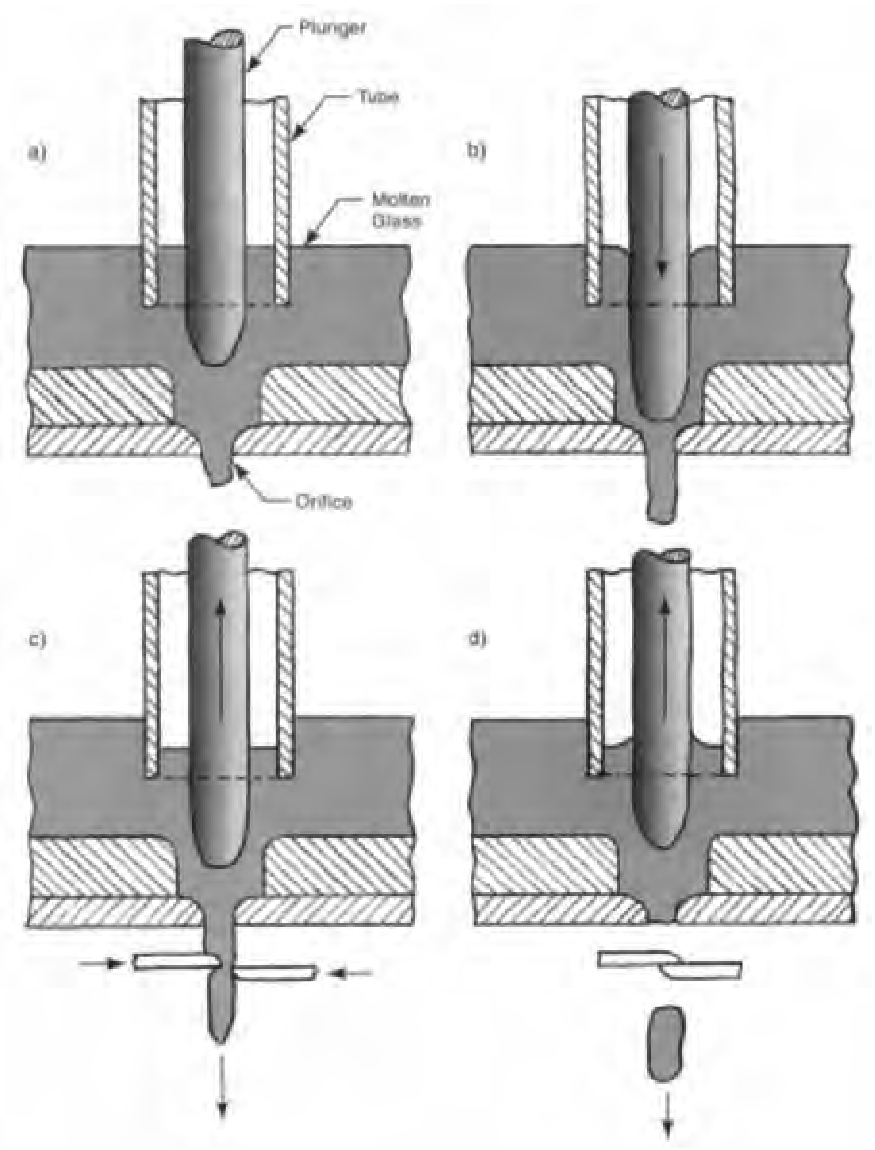

Fig. 5A2b3a gob feeder cycle: a) Molten glass starts to flow through orifice, b) The plunger descends and forces more molten glass through the orifice, c) Shear blades advance to cut gob from stream of molten glass; plunger starts to retract, d) Gob falls as retracting plunger pulls glass back from shears.

a depression in the top of the glass in the mold. The neck portion of the bottle is also formed in this mold.

2. The parison mold is lifted and a knife passes across the bottom of the mold, severing any excess glass from the parison. At the same time, the rounded pin at the top is withdrawn, and air pressure in the resulting opening enlarges the top of the parison, forming a "bubble".
3. The mold opens, freeing the parison which is held by neck rings at its upper end. The parison is out in the open as the machine table rotates. The parison elongates from the effects of gravity and from several puffs of air into the bubble.
4. The parison enters the blow mold, which closes around it. Air is blown into the bubble, expanding the parison against the mold walls.

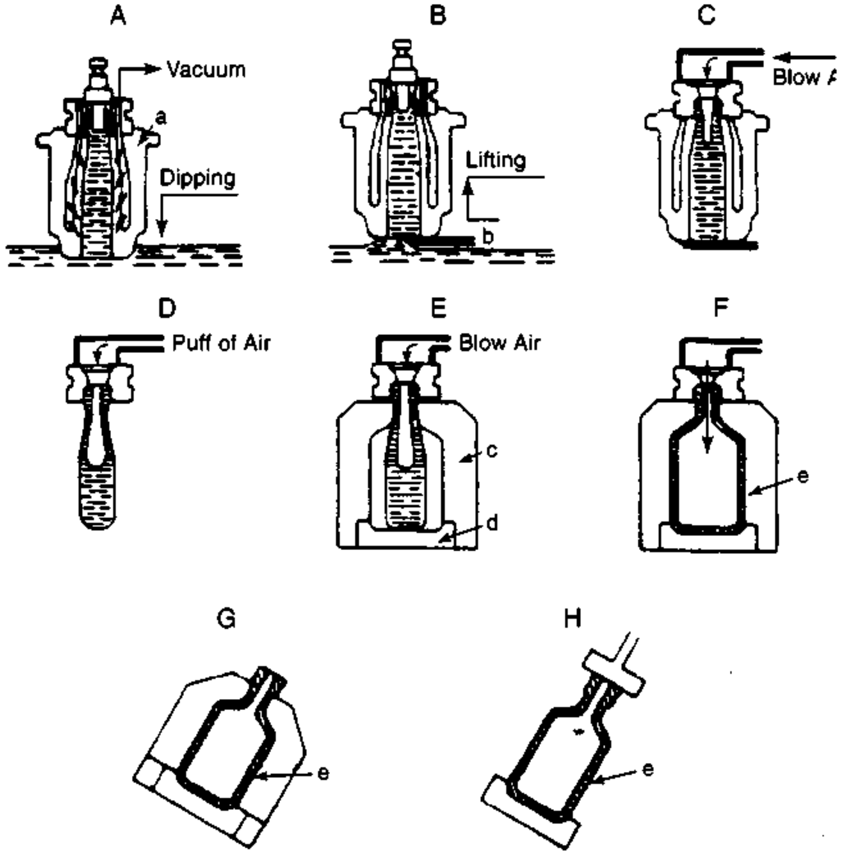

Fig. 5A2b3b The suck-blow molding process for holloware: A - preform mold being filled by a dipping-sucking process, B - bottom of preform of sucked glass is sheared off and the mold starts its upward movement, C - connection to compressed air supply, D - puff of air partly inflates the preform, E - preform is inserted into the finishing mold, F - the finishing blow, G - removal of the mold and workpiece from the blowing mechanism, H - the finished workpiece. Identified components: a - preform mold, b - shears, c - finishing mold, d - bottom-forming mold section, e - finished glass bottle. (Courtesy Schott Glas.)

5. The neck rings open and the mold with the bottle inside drops below the pot as the table continues to rotate. The mold and bottle cool.
6. Upon further rotation of the table, the mold opens and the bottle is discharged. Fig. 5A2b3b illustrates the molding action schematically. The machine is used for large-scale production. With smaller bottles, double and triple molds are used so that each cycle of the machine produces two or three bottles.

A2b3c. ***the blow-blow process*** - uses a gob feeder instead of drawing molten glass into the parison mold by suction. The parison mold is in an inverted position so that the part of the parison that will form the bottle opening is at the bottom. The neck ring and a center pin are in place. The gob is dropped into the mold and is forced by air pressure from above to settle into the bottom of the mold. As in suck-blow molding, a rounded pin forms the start of the bubble. The pin withdraws and air pressure from below forms a bubble in the parison. The mold opens and the parison is removed, turned back to a right-side-up position, and placed into a nearby blow mold. The parison is reheated and elongates slightly. The final blow then takes place. After cooling, the bottle is removed from the blow mold. See Fig. 5A2b3c for an illustration of the process sequence.

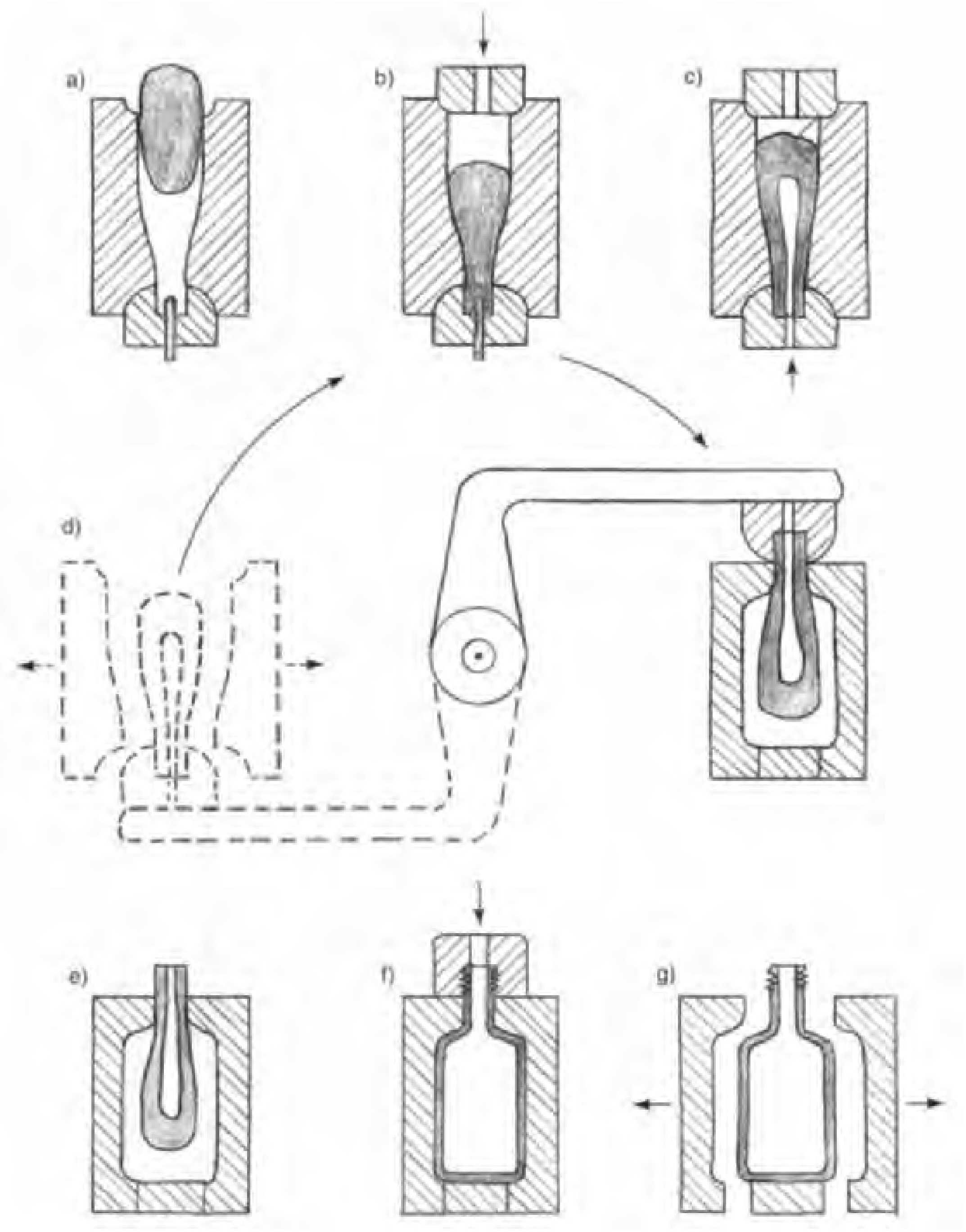

Fig. 5A2b3c The blow-blow molding process. a) Gob feeder places gob of molten glass in the parison mold. b) air pressure from the top of the mold settles the gob at the bottom of the mold. c) Counter blow - a brief blast of air from the bottom of the mold forms a bubble in the parison. d) The parison mold opens and the parison is removed, inverted and transferred to a bottle mold. e) The parison, in the bottle mold, is reheated. f) A blowing head is placed at the top of the mold and, with a final blow, inflates the glass bubble to a bottle shape. g) After some cooling, the mold opens and the cooler bottle is removed from the mold.

A2b3d. ***the press-blow process*** - is similar to the blow-blow process except that the parison is not blown but is pressed between the parison mold walls and a central plunger extending from the neck area of the mold. The plunger provides a internal hollow space for later blowing. Use of pressing with fixed tooling gives improved glass distribution in the parison. After pressing, the parison is transferred to a blow mold and blown to final shape. Because this process gives better control of wall thickness, it is used in the production of thin-walled containers including disposable glass bottles. The bottom line (item C) of Fig. 5A2b illustrates the approach in simplified form.

A2b3e. ***the rotary-mold (paste mold) process*** - is suitable only for parts of a circular cross section. The molds are also always circular and are lined with an absorbent coating that is soaked with water before blowing. During blowing, the water produces steam from the heat of the molten glass. This provides a cushion between the mold and the glass that permits the glass to be rotated during blowing and ensures that mold seams will not be seen on the blow molded articles.

The parison for rotary mold blowing can be made by any of the methods described above. One commercial machine uses a gathering device and blowing to make the initial parison; another uses pressing. However, the significant difference in the process is that, during the final blowing, the glass or the mold rotate against one another and the mold surface has a saturated water-absorbent coating. Water is applied to the mold surface for every blowing cycle by dipping or spraying the mold. The parison is held by a metal ring that can be driven to provide the rotation. The moil, solidified glass that contacts the retaining ring and air nozzle, is not usable, and is separated from the finished article. Applications include medium and high-grade tumblers, cereal bowls, and lamp bulbs. The process is illustrated in Fig. 5A2b3e.

The mold coating is cork, other carbonaceous material, graphite, or some proprietary material. It is adhered to the mold surface with a drying oil followed by baking at a high temperature. Roughness in the coating smooths out from the first few usages but some rotational lines may be visible on the final article. For limited quantities and artwork, the rotary-mold approach may be carried out manually.

A2b3f. ***ribbon machine blowing process*** - This variation of the paste mold process is used to produce light bulbs. The machine is provided with a stream of molten glass that flows continuously from a forehearth. Two steel rolls flatten the stream into a "ribbon". The rolls are shaped so that the ribbon has regular patties of greater thickness connected by a thin web. Beneath the ribbon, as it moves through the machine, is a conveyor with steel plates that support the ribbon. Holes in the steel plates match the positions of the patties in the ribbon. The molten glass sags into these holes, forming a shallow bubble. Blowing nozzles on an upper conveyor, movement of which is synchronized with the steel plate conveyor, supply puffs of air that expand the bubbles. At the same time, a series of wet paste molds traveling under the steel plate conveyor and synchronized with it, open, envelope each bubble, and close.

The wet paste molds rotate as additional air is blown into the bubbles, converting them to glass bulbs. After the bulb is blown, the mold opens and the bulb is separated from the ribbon by a light mechanical hammer blow, falling to another conveyor where it is moved to an annealing lehr. The conveyor moves rapidly and many bulbs are processed simultaneously. As many as 10,000 small light bulbs per minute can be made with the ribbon machine process.[5] Fig. 5A2b3f illustrates the operation of the machine.

A2c. ***glass tubing manufacture*** - The Danner process starts with a continuous strand of molten glass, which flows from a forehearth onto a slowly rotating mandrel. The mandrel is hollow, made from fire clay and is angled slightly downward, as shown in Fig. 5A2c. The rotation of the mandrel causes the glass to wrap around it. As it slides down and off the mandrel, the mandrel leaves a hollow in the center. Air blown through the mandrel maintains the hollow core in the glass. The glass leaving the mandrel is drawn away from the mandrel, forming tubing of smaller diameter and thinner wall than that which first forms on the mandrel. The operation is continuous until the tubing is cut to length. The tubing is made into fluorescent

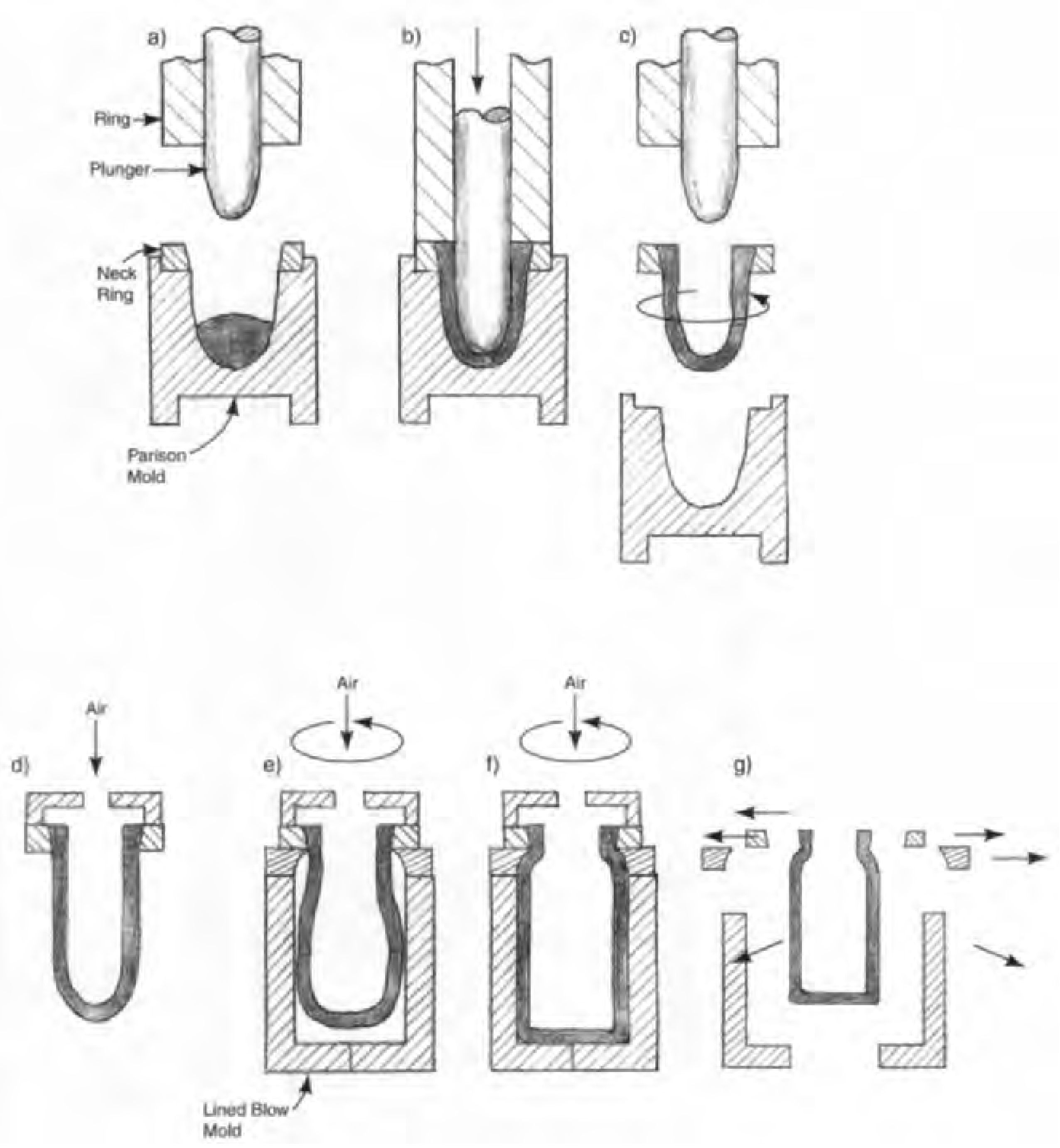

Fig. 5A2b3e The rotary mold (paste mold) process: a) Gob of molten glass is placed in parison mold and plunger is poised to descend. b) Plunger descends, presses the glass gob to a form a parison and retracts. c) The parison is reheated as it is rotated. d) A puff of air into the parison elongates it. e) The parison is inserted in the lined blow mold. Another puff of air opens it further as it rotates. f) The final air blast fully forms the glass into the desired shape as it rotates in the mold. Steam from the heated mold lining prevents the glass from contacting the mold surface during the rotation. g) As the formed glass part cools, the mold opens and the part is removed.

light tubes, vials, ampules, industrial glass piping, and containers.

Another tube drawing method, the Vello process, uses a ring-shaped orifice exiting from the forehearth. The glass flows downward through the orifice and has a hollow center formed by the opening and maintained by a pipe in the center of the ring. The glass tube, while still soft, is then drawn off along a horizontal roller track, cooled, and cut to length.

A2d. ***centrifugal casting*** - A gob of hot glass is dropped into a rapidly rotating steel mold. Centrifugal force causes the glass to flow outward and coat the surface of the mold, forming a wall of uniform thickness. Excess glass is trimmed with a sharp-edged wheel or other cutter while the glass is still in the plastic state. When the glass has cooled sufficiently to have hardened, the cast part is removed from the mold. This approach has been used to form the funnel-shaped bodies of television picture tubes, and for column sections in chemical plants.

A3. *flat glass processes*

A3a. ***manual methods for producing flat glass*** - Two methods were used to make flat glass sheets prior to the advent of machine methods. In the crown method, a round bubble was first blown. An iron rod called a "punty", was attached opposite the blowpipe and the blowpipe was removed. The open bubble was spun on the axis of the punty so that the glass flattened into a circular disk. After cooling, the smoothest areas of the circular disk were cut into rectangular panes. A more productive and better quality method involved manual blowing of a bubble that was worked into a cylindrical shape. The two ends of the cylinder were cut off and an axial cut was made in the resulting tube for its whole length. The curved rectangular piece that resulted was placed on a flattening stone in an oven. Where the glass had softened, it was straightened and ironed flat against the stone. As with the crown method, the quality of the window panes produced was poor and quite variable from piece to piece, but larger panes could be produced. These methods are no longer used except for art work, reproductions of antique window panes, and some other specialty, low-quantity production.

A3b. ***drawing sheet glass (the Fourcault process)*** - The Fourcault process was the first successful mechanized production method for drawing sheet glass directly from a tank. It was first

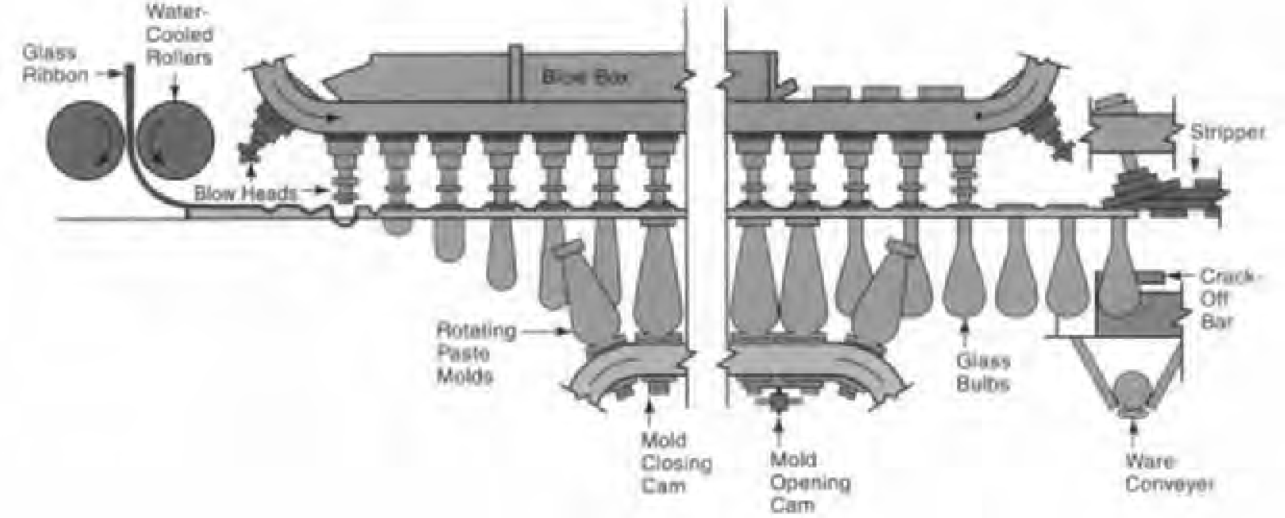

Fig. 5A2b3f The operation of a ribbon machine producing lamp bulbs at a high production rate. (Courtesy of Corning Incorporated, corporate archives.)

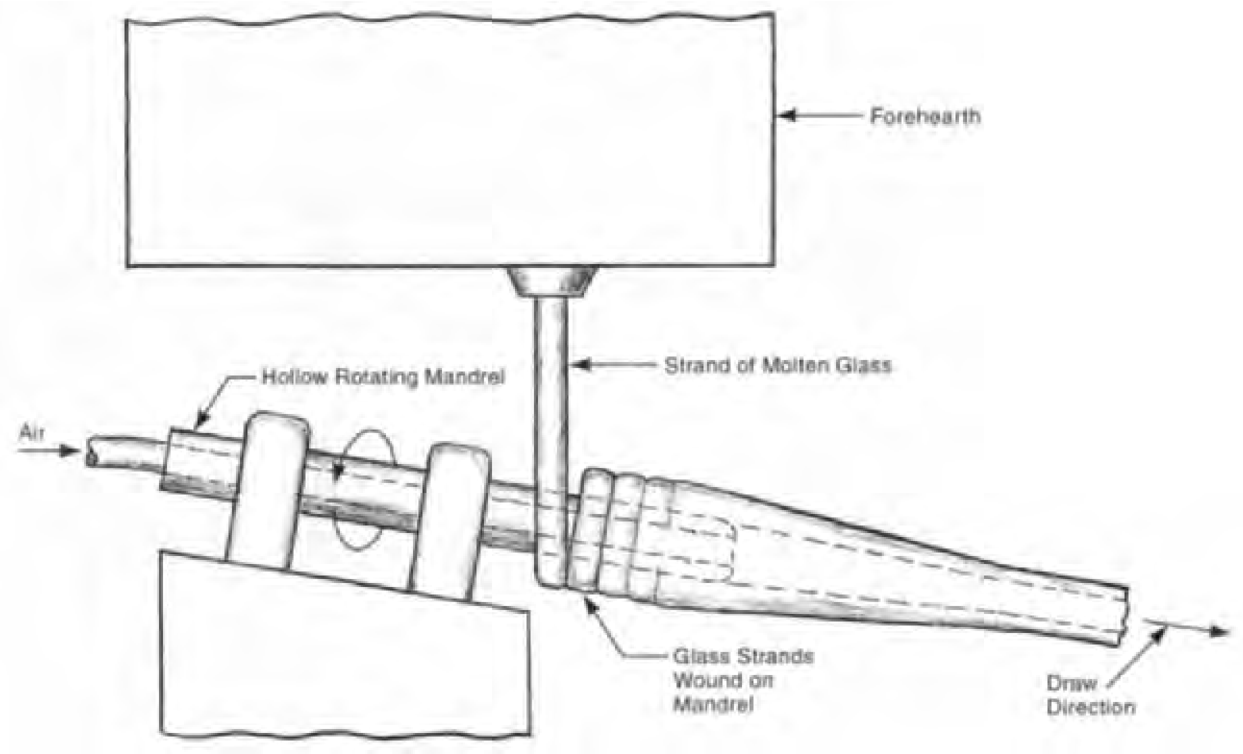

Fig. 5A2c The Danner process for making glass tubing from a strand of molten glass wrapped around a rotating mandrel.

carried out on a production basis in 1914. Prior to that, the production of flat glass was at least partly a manual operation. The method is keyed to the "debiteuse", a long clay block with a lengthwise slot. The block floats on the molten glass but, when it is pressed slightly down, into the molten glass, some glass rises out of the slot. This glass is grasped by an iron "bait" and is pulled upward past a cooling station and into an annealing tower. The tower contains rollers that draw the glass upward and the operation is thereafter continuous.

The rate of drawing, among other factors, determines the thickness of the glass. (Slower drawing yields greater thickness.) The length of the slot in the debiteuse determines the width of the ribbon. Width is maintained by pairs of knurled rollers at the edges that maintain a constant side pull on the ribbon. The drawback of the process is a tendency toward a small amount of waviness in the sheet, which cannot be avoided. There may also be fine marks on the glass surface left by the rollers and some tendency to devitrification caused by the refractory material from which the debiteuse is made[2]. Fig. 5A3b illustrates the process.

A3c. ***drawing sheet glass (the Colburn or Libby-Owens process)*** - This process, seen in Fig. 5A3c, is similar to the Fourcault process but does not use the debiteuse. Instead, the initial ribbon of glass is picked up from the tank with a metal "bait" and immediately controlled by chilled rollers at the edges. It also is diverted into a horizontal direction by a polished roller after traveling upward only about 27 in (70 cm). It is stretched, flattened, and supported by transporting rollers as it moves into a 200 ft (60 m) annealing lehr. The drawing speed with the Colburn process is twice that used with Fourcault.

A3d. ***drawing sheet glass (the Pittsburgh process)*** - In use since about 1928, this process is similar to the Fourcault and Colburn processes and combines the best features of both. Glass is drawn vertically through a cooling zone and annealing lehr. The process can be run at high speed, gives higher quality than the other drawing methods, and allows quick changes of sheet thickness. The quality advantages are most significant for thinner sheets. Thicknesses down to 0.050 in (1.25 mm) are of high quality. Instead of the debiteuse of the Fourcault process, a refractory guide or "draw bar" for the glass to be drawn is positioned several inches below the surface in the plane where drawing takes place. This bar improves the flow currents in the tank and conditions the glass. The initial end of the glass ribbon is held by cooled grippers that are shaped like hollow plates. The path of the glass sheet and arrangement of the equipment is illustrated in Fig. 5A3d.

A3e. ***plate glass manufacture*** - involves the rough and finish grinding of rolled glass. The full operation has two phases: the production of rough glass by rolling, and then the grinding and polishing. However, in the highest mass-production conditions, these phases are combined in one continuous sequence requiring a factory production line

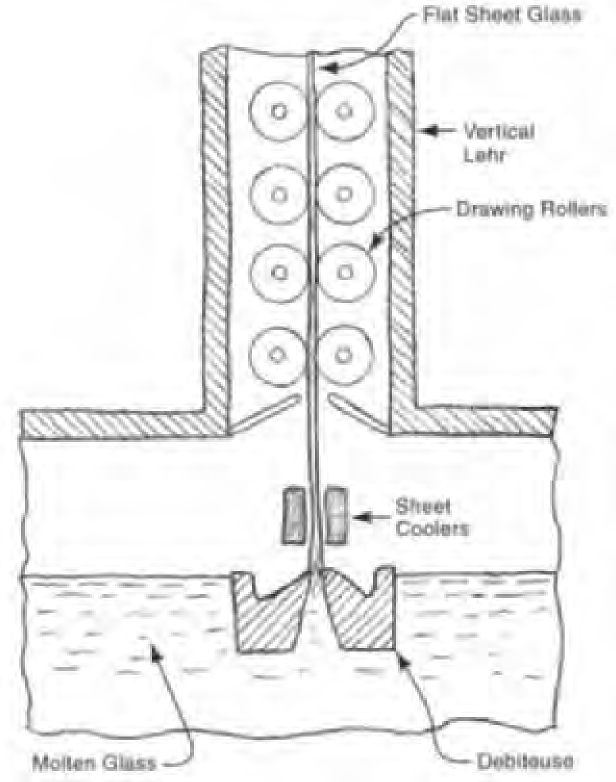

Fig. 5A3b Drawing sheet glass with the Fourcault process. A continuous flat sheet of glass is drawn vertically upward.

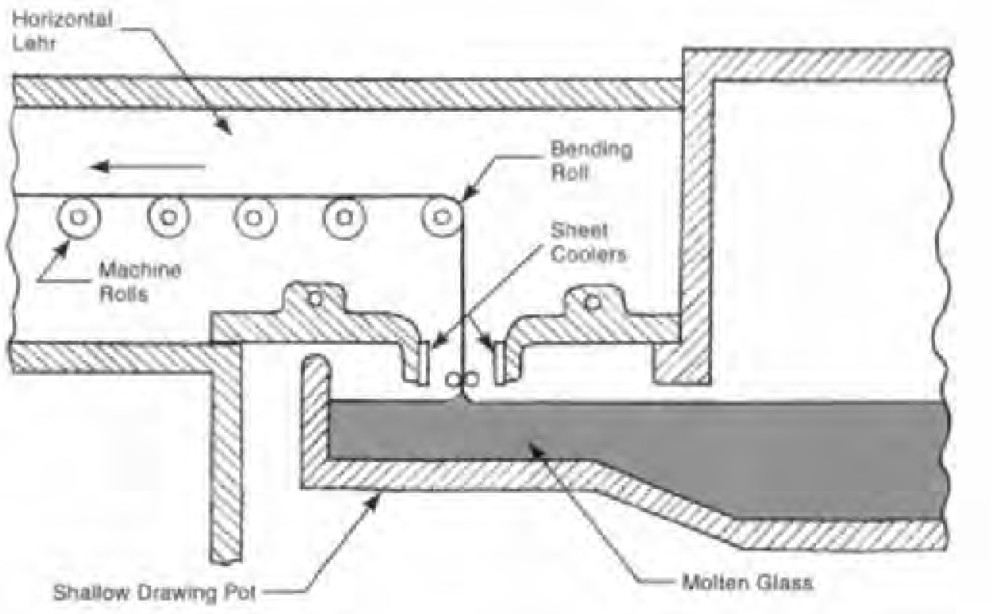

Fig. 5A3c The Colburn process for drawing continuous lengths of sheet glass.

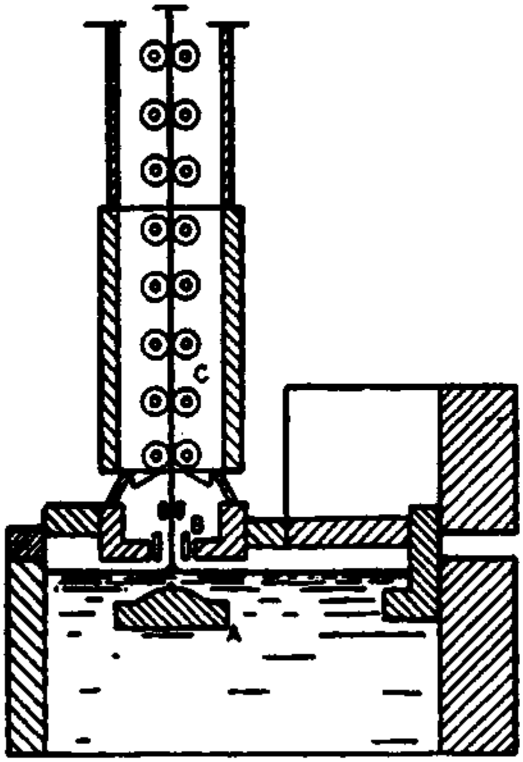

Fig. 5A3d The Pittsburgh process for drawing flat sheet glass: A - drawbar submerged in molten glass, B - sheet coolers, C - vertical drawing and lehr area. (Courtesy PPG Industries Corp.)

almost 2000 feet long. Rolling involves the following steps:

1. allowing the molten glass to flow over a weir or through a slot from the melting tank,
2. passing the resultant ribbon of glass between a pair of water-cooled rolls to give it accurate thickness and width,
3. stretching it slightly to improve flatness, and
4. passing it through an annealing lehr.

In the continuous process, the cooled glass ribbon, still uncut, moves to a grinding section where vertical-spindle grinding machines above and below the ribbon remove material from both the top and bottom surfaces. The operation is fully automatic. Abrasive compounds and large flat rotating disks work against the glass surfaces. Sand, garnet, and emery, with water, are the abrasives used. The top and bottom grinding and polishing disks are directly opposite one another and rotate in opposite directions to help keep the glass ribbon in line.

Following grinding, the ribbon, still uncut, moves to a unit where both top and bottom surfaces are polished with iron oxide or cerium oxide, again by large rotating disks. Many grinding and polishing disks, in line, work on the ribbon before it is finished. The glass ribbon is then cut into separate sheets for warehousing and further cutting. Fig. 5A3e lists the full manufacturing sequence. In earlier, and somewhat less high-production arrangements, the glass was cut after rolling, and the grinding and polishing was performed on separate sheets with the operations done only on the top surface until the sheet was inverted and the grinding-polishing sequence repeated on the other surfrace. In both methods, with plate glass, the surface flatness, parallelism, thickness, and optical qualities are superior to those achieved with other flat glass processes. However, the quality of float glass is almost as high and far less costly to produce, and float glass has therefore replaced plate glass in almost all applications. Common applications for plate glass were mirrors, automotive safety glass, windows, especially for commercial establishments, and as a starting material for glass finishing operations. The thickness range was from 0.125 to 1.25 in (3.1 to 31 mm).

A3f. ***float glass process*** - The molten glass is fed onto a shallow tank containing molten tin. The glass, being lighter than the tin, floats on the surface. The tank is typically 13 to 30 ft (4 to 9 m) wide and 200 ft (60 m) long. The glass spreads to form a sheet with parallel surfaces and a natural thickness of slightly over 1/4 in (slightly under 7 mm). The operation is carried out in a mildly reducing atmosphere to prevent oxidation of the molten tin. The glass enters the tank at a temperature of about 1920°F (1050°C). It cools as it flows along the tank and, at the exit end, is about 1200°F (650°C) and is solid enough to be lifted off the bath of molten tin. The glass is carried to an annealing lehr before being cut to size.

Glass sheet from 0.060 in (1.5 mm) to 0.80 in (2.0 mm) in thickness can be made with the float process. In producing thin glass, rollers are used to stretch the sheet to a lesser thickness and to

Manufacturing Sequence for Plate glass

1) Raw materials are received and stored
2) Materials are weighed and mixed
3) Batch is fed to furnace and melted
4) Molten glass flows from the furnace through forming rolls to form a rough, continuous ribbon
5) Ribbon is stretched slightly to improve flatness
6) Ribbon travels through annealing lehr
7) Both top and bottom surfaces are ground flat by a series of vertical spindle, large-disc grinding machines as the ribbon travels past them
8) Both surfaces are polished with similar machines using finer abrasive
9) An acid wash removes grinding residue
10) Sheets are cut from the ribbon
11) Sheets are inspected and sent to storage for later final cutting and shipment

Fig. 5A3e The manufacturing sequence for plate glass.

control the speed and width of the glass ribbon. Thicker glass is made by partly damming the flow of glass on the tin surface. The float method has replaced almost all plate glass production because manufacturing costs are considerably lower and the dimensional quality is virtually as good. Float glass also has a more brilliant fire-polished surface.

The float glass process has also replaced sheet glass drawing methods because float glass quality is superior to that of drawn glass. Float glass is used for window glazing, vehicle safety glass, mirrors, visual displays, and other applications where transparency and a flat surface are required. Fig. 5A3f illustrates the process.

A3g. ***rolling (casting) flat glass*** - Rolling is carried out for two major purposes:

1. as the first operation in the production of plate glass, and
2. to produce a flat glass which is not totally transparent.

Glasses with patterned surfaces are made by rolling. The process for higher production quantities of rolled glass is the same as described in paragraph A3e (plate glass) above, except that, for rolled glass, a patterned or textured roller is used instead of one with a smooth surface and there is no grinding and polishing. The glass sheet will have the roller pattern embossed on its surface. Usually, only one of the two surfaces is patterned; the other is essentially smooth. The spacing between the rollers determines the thickness of the rolled sheet. The method of feeding the molten glass from the forehearth to the rollers is sometimes referred to as

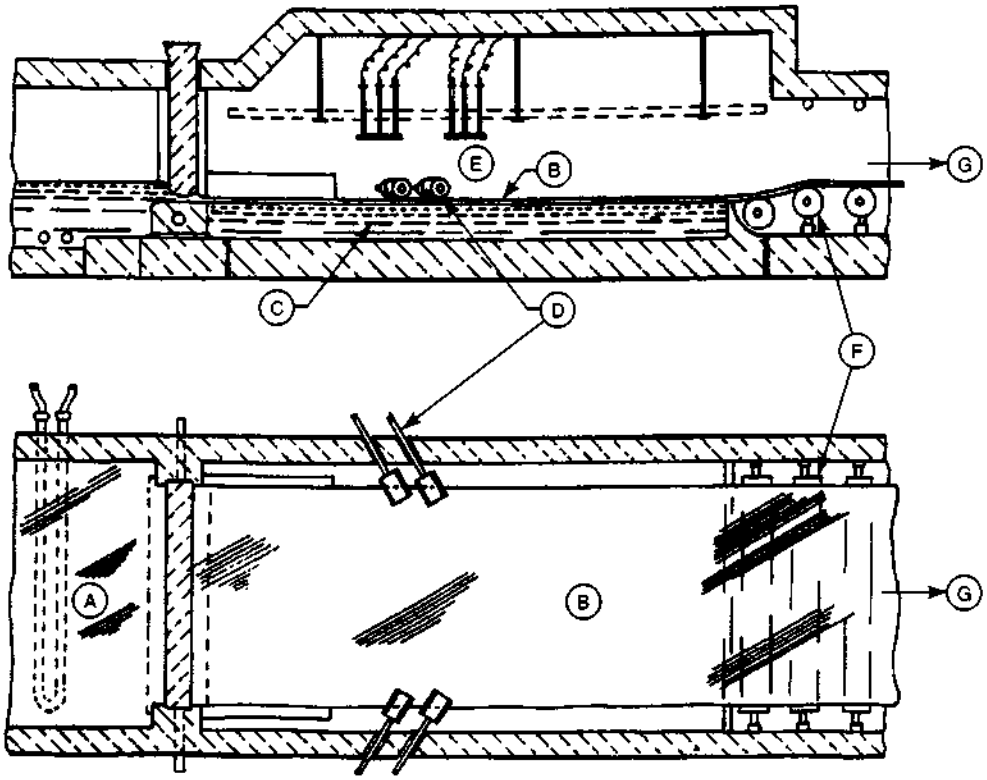

Fig. 5A3f The float glass process: (A) molten glass, (B) layer of glass floating on molten tin, (C) molten tin, (D) guide rollers, (E) heated chamber (fire polish zone), (F) transport rollers, (G) to annealing lehr. (Courtesy PPG Industries Corp.)

"casting" and rolled glass is sometimes referred to as cast glass.

For smaller-quantity production, the glass may be cast or poured onto a flat iron table, after which a roller is passed over it. With somewhat higher quantities, a patterned surface on a movable rolling table is used. The molten glass is ladled onto the surface and the moving table, on a track, then passes under a set of rolls that produce a sheet of the desired thickness. Wire glass, that is flat glass with a wire mesh incorporated in it, is also made with this moving table method. First, enough molten glass to produce half the thickness of the sheet is ladled onto the movable table; the table is moved under a roller and the wire mesh is then fed onto the sheet. Then, another ladle of molten glass is poured onto the sheet; the molten glass spreads and the table is moved under a second roller, which provides the desired surface and thickness for the final sheet containing the wire mesh in the middle.

A wide variety of surface textures can be embossed on the surface of the rolled glass sheet, depending on the application involved. Rolled glass is used for skylights, light fixtures, table tops, greenhouses, office partitions, bathroom doors, office doors, and industrial and commercial glazing where transparency is not wanted. Greenhouse glass has a special surface designed to scatter light. Partition glass can have many different surface designs: ribbed, "hammered" (like metal), or faceted surfaces.

A4. *heat and chemical treating operations*

A4a. ***annealing*** - is a heating procedure intended to reduce residual stresses and strains in the glass object or sheet. These stresses and strains could lead to fracture of the glass and, in optical applications, could result in unacceptable variations in optical properties. The stresses arise when the glass cools unevenly from its initial molten state due to the shape of the object or ambient conditions. In annealing, the glass is first heated to a temperature high enough that existing stresses are relieved and then is cooled slowly enough that stresses induced are within an acceptable range. The annealing temperature is considerably lower than the forming temperature for the same glass composition. Heating to the annealing temperature can be rapid so long as the glass does not fracture.

Annealing temperatures for window glass range from about 815 to 1100°F (435 to 595°C) depending on the type of glass. This temperature is maintained for sufficient time to relieve existing strains and stabilize the glass. Cooling then begins at a slow rate and in a controlled manner down to a strain point (for window glasses) of about 670 to 930°F (355 to 500°C), at which point rapid cooling does not induce additional permanent stresses. Heating and cooling times depend on the thickness of the glass, its expansion coefficient, the shape of the object being annealed and the amount of permanent stress and strain allowable for the application. Thick sections, and objects with both thin and thick sections, take more time.

Optical applications necessitate much lower levels of residual stress and correspondingly longer annealing cycles. Sheet glass normally takes considerably less time. A heavy section for optical use may require several weeks for fine annealing, while thinner sheet may require less than half-hour for the annealing cycle.

A4b. ***tempering*** - is a means of making glass tougher, by inducing a compressive stress in the surface of the tempered workpiece. Failures with glass almost always occur because of tensile stress failures at the surface. (Internal tensile stresses are less critical). Residual compressive stresses in the surface of the glass counterbalance tensile stress loads on the product. Tempering, by inducing these compressive stresses, can increase the stress required to break glass parts by a factor of $2^1/_2$ to $3^1/_2$.[4] The glass object does not break until the surface compression is overcome by sufficient applied force and the surface is put into tension (or until the interior tension becomes large enough to cause failure). Another advantage of tempered glass is that, when it breaks, it shatters into many small pieces of somewhat regular shape instead of into sharp-pointed or sharp-edged shards.

The tempering process involves heating the glass to approximately the softening point, a temperature about 270°F (130°C) above the transformation temperature of the glass. Immediately afterwards, the glass is subjected to a blast of cold air from a suitably arranged array of jets. Alternative methods involve plunging the glass workpiece into a bath of oil or fused salts. This chilling quickly quenches the glass surface while the interior glass remains at a higher temperature. As the interior glass slowly cools, it shrinks and pushes the adhering surface material into compression. The interior glass remains in tension.

Tempered glass is used in glass doors, ship portholes, shelves, store fronts, oven doors, arc lights, and radiant heaters. It is also used for automotive side windows.

A4c. ***chemical toughening*** - also induces a compressive stress in the surface of the glass and tension in the center. The glass workpiece, after otherwise being finished, is immersed in a molten salt bath. The temperature is below that which would soften the glass. An ion exchange takes place. Some ions at or near the surface of the workpiece migrate into the salt bath. Larger ions from the bath diffuse back into the glass to fill the spaces left by the migrating ions. Since the larger ions normally would require more space, they become compressed upon entering the glass surface. This produces a compressive stress at the surface. The advantage of chemical treatment is that all surfaces of the glass workpiece are treated equally and the object treated does not suffer any deformation. It is therefore useful for formed objects. Tubing, containers, and pressed objects can be chemically treated. The depth of toughening can be controlled by the length of time in the salt bath and its temperature. Thinner sections, down to about 0.040 in (1 mm) can be treated. Glass compositions vary in their suitability for chemical toughening. Soda-lime-silica glasses, used for sheet applications, are less adaptable to the process. The process is used for toughening eyeglass lenses, and for glass components used in aircraft and processing industries, and for lighting components.

A5. *secondary, finishing, and decorating operations*

A5a. ***bending and sagging*** - Flat glass is bent to provide curvature for architectural and automotive applications. One method is gravity bending, which uses only a one-piece mold. The flat sheet is placed on the surface of the open mold that has the shape wanted for the finished part. Both the mold and the glass resting on it are transported on a roller conveyor through a heating tunnel that heats the workpiece to the desired temperature. The heated glass sags to conform to the shape of the mold. The glass and mold then proceed together through quenching or annealing. Sometimes, spot heaters (gas burners or electric heating elements), are placed to provide extra heat to areas requiring a sharper bends. This method is used for production of dished shapes and cylindrical segments from flat glass, and in bending rods and tubing. Another approach, after the glass has been heated to the suitable bending temperature, is to place the sheet between two matched ceramic dies, which press it to the desired shape. Previously this method produced unacceptable distortion in the glass but process improvements have reduced the distortion to acceptable levels. If the glass is to be tempered, it is quenched immediately after bending. Some allowance must be made in the bending dies for shape changes during quenching.

A more recent development uses a flow of heated air to support the glass sheet as it is heated and as it moves from a heating area to a forming area, and then to a quenching area. A ceramic bed with numerous small holes, or a series of adjacent, nested, small cup-shaped holes, as shown in Fig. 5A5a, supply the heated air. Return holes and channels remove the excess air. The return holes are necessary to balance air that escapes at the edges. Without them, there would be too much air at the center that would create a bulge in the sheet. Air pressure is enough that the glass sheet virtually floats about 0.010 to 0.020 in (0.25 to 0.50 mm) above the bed. The bed is inclined slightly to make the glass sheet slide along the bed. The initial bed is flat but the glass sheet slides along, controlled by drive wheels, to an area where the supporting bed is curved to the desired shape and then, after it conforms to the curvature of the bed, to a quenching area.

A5b. ***grinding*** - Glass is normally machined with abrasive processes. Grinding with bonded abrasive wheels and with loose abrasives driven by metal wheels are both used. Water is used as a cutting fluid to prevent overheating of the glass, to increase the grinding rate, and to prevent glazing of the grinding wheel.

Cutting of glass objects can be done with one of several methods: Score line cutting involves scribing a line in the glass surface and then applying a bending force across the line to break the glass apart. The scribe line can be made with a small sharp wheel that is pressed into the surface as the wheel is rolled across the glass or with a file, knife blade, or carbide- or diamond-pointed tool.

Another method, particularly applicable to glass tubing, uses a hot wire. The Nichrome wire loop is resistance heated to the point of being red hot. Holding the wire against the tube makes a score line and suddenly chilling of the line with water, or manual bending at the score line, breaks the tubing along the line. A third method, more suitable to larger quantity production but also suitable for laboratory or prototype conditions is the use of a wet abrasive cut off wheel. Silicon carbide is the abrasive used, commonly of 120 grit, with substantial water flow. Another cut-off method uses a dry steel disk or stone wheel pressed against the tubing as it rotates. Frictional heat creates thermal expansion that causes the glass to part.

Decorative cutting involves the grinding of grooves in the surface of the workpiece with rotating grinding wheels whose edges are dressed to the shape of the groove. Much cutting is artisan work. A design is first drawn on the glass surface with red lead, rosin, and turpentine, and the cutting action takes place on the scribed lines. Wide, narrow, shallow, or deep cuts are made by guiding the workpiece by hand against a suitable wheel. Various standard cuts referred to as leaf and stem,

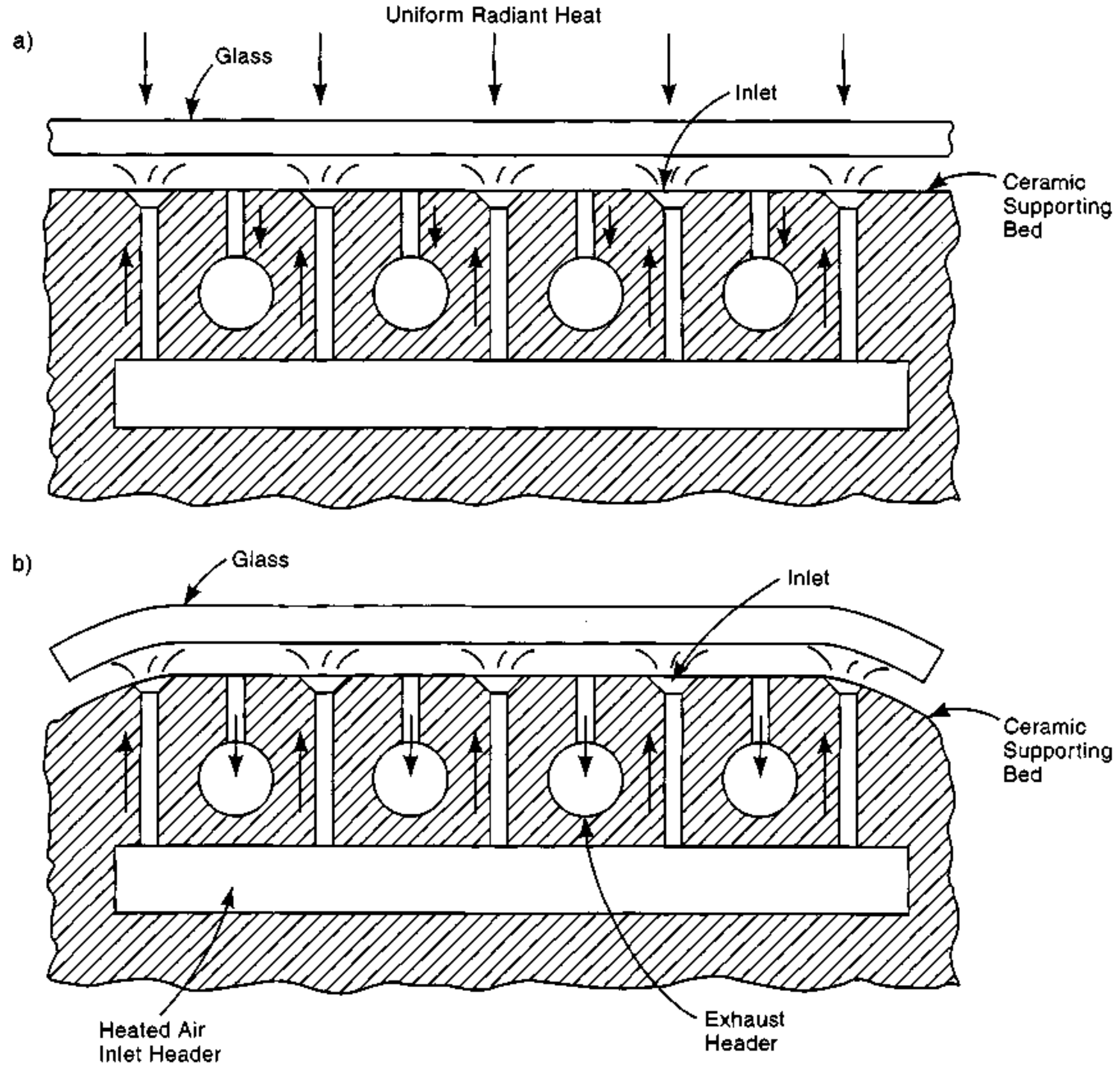

Fig. 5A5a Cross-sectional view of air float bending and tempering of sheet glass. a) heating section. The glass sheet floats above a ceramic bed on streams of hot air. The sheet is heated as it slides on the air cushion (guided by drive wheels) to the forming section. b) At the forming section, the shape of the supporting bed is changed and the glass sheet sags and bends. The sheet then continues to slide to a tempering or annealing section.

flutes, bands, spikes and punties are used. The hardness of the stone cutting wheel is selected to suit the hardness of the glass.

Another artisan technique for engraving designs is to use copper wheels, abrasive grit, and motor oil. The designs are applied manually by the wheel, which may be as small as 1/8 in (3 mm) in diameter. The engraved surfaces have a frosty appearance.

Drilling small holes - less than 3/8 in (10 mm) diameter - is done with hardened steel or tungsten carbide-tipped drills. The drills are rotated slowly and turpentine is used as a coolant. Chipping at the exit side of the glass part is avoided by countersinking that side first or having a back up sheet attached to the underside of the workpiece. Larger holes are drilled with brass tubes having vertical slots at the cutting end, charged with abrasive powder and water. Rotating the tube and applying pressure produces a cutting action from the abrasive. A glass disk, corresponding in diameter to the interior of the tubing, is produced. Tube drills are also commercially available with diamond dust bonded to the cutting edges, and do not need abrasive. Diamond abrasive saws and wheels of various types are also used for cutting and surface grinding.

Cylindrical and internal grinding are used to produce mating surfaces for stopcocks in laboratory glassware. In large-lot production, centerless grinders may be used. Several passes may be made with progressively finer grit sizes starting with 120 grit metal-bonded diamond wheels and ending with 400 or 600 grit silicon carbide wheels. Flat surfaces for bevels at the edges of sheet glass are ground with surface grinders. Loose abrasives, water, and large-diameter horizontally-rotating steel wheels are used to put flat surfaces on apparatus bases and bell jars. When done manually, the glass workpiece is held and moved in a figure-8 pattern against the wheel. The wheel is cleaned and the operation is repeated with a finer grit until the desired finish is obtained. Wet abrasive belt machines are used in glass-blowing shops to perform many rough grinding operations.

A5c. ***polishing*** - is often the final stage of a grinding operation whose purpose is to further smooth the ground surface of the workpiece. A fine, loose, abrasive is used with water as a coolant. The polishing compound is applied with a powered rotating buff, which may be cloth fabric, a bristle brush, leather, felt, poplar wood or one of the softer metals. The workpiece is held against the rotating buff or vice-versa. For final polishing, water and a soft powder such as cerium oxide (optical powder) or rouge (ferric oxide) is used. Very little material is removed by such an operation, but minute irregularities in the service are leveled and a high degree of smoothness can be attained. For optical applications, a very fine and accurate surface is possible.

Acid polishing is an alternative method. It can produce a brilliant surface (rock crystal). Workpieces are placed in Monel metal baskets and immersed alternatively in an acid bath and water until polishing is complete, typically for a total time of 10 to 15 minutes. The time for each immersion will vary from 10 to 30 seconds depending on the type of glass involved and the acid strength. The acid is usually 3:1 or 3:2 concentrated sulfuric and 60 percent hydrofluoric acids. Too much time in the acid in at any immersion can result in an uneven surface.

A third polishing method is fire polishing. With this method, the glass is heated to a temperature of 900 to 1300°F (500 to 700°C) at the surface by directing a flame to the workpiece. This heating causes the surface glass to flow and, because of surface tension, become more smooth.

A5d. ***fusion sealing*** - Glass-to-metal seals are important in glassware made for scientific use. They are made by heating both the glass and the metal surface. The metal should have a thin oxide surface. The glass "wets" this surface and absorbs the metal oxide so that part of it dissolves in the glass. This may change the color of the glass at the interface and thereby can provide an indication that the seal is sound. Proper oxide thickness for the operation is facilitated by heating the metal part sufficiently, in an oven, to oxidize the surface. With an oven, time and temperature can be controlled accurately, but sometimes flame oxidizing is used instead. Machined parts are typically degreased and baked in a hydrogen atmosphere prior to the surface oxidizing step. Glass-metal seals are made with copper, steel, nickel-iron alloys, platinum, chrome-nickel-iron alloy, high chrome iron alloys, and nickel-cobalt-iron alloys.

Glass-to-glass seals require glasses of similar thermal expansion coefficients; otherwise stresses will develop at the seal that cannot be relieved by annealing the joint. The same is true of glass-to-metal seals except when the metal involved is relatively soft. Glass-to-glass seals are made by heating the ends to be joined, often with gas burners, pressing the ends together, and blowing, pulling, or smoothing the joint. Sealing lathes, which rotate both parts in unison, may be used to hold the workpieces and bring them together. Electric arc heating is another method. The glass workpieces are first heated with gas burners. When the glass has heated enough so that it is conductive, an arc is drawn for a few seconds, heating the ends to the fusion temperature. The parts are pressed together and the joint is dressed as necessary. Heavier sections,

Previous Page

and those of irregular shape, can be joined with this method. Rectangular TV picture tube sealing is an example.

Diffusion sealing is another method for making glass-to-glass assemblies. The surfaces to be joined are polished to a flatness within 30 millionths of an inch (3 fringes of yellow light), kept free of any dust, and assembled together under pressure from a light weight. The assembly is then heated to the annealing temperature. The surfaces in contact will diffuse together.

A5e. ***grit blasting*** - Abrasive particles, driven against the surface of glassware by a jet of high velocity air, remove small amounts of material from the surface. The technique is useful in permanently marking, decorating, or modifying the surface of glass workpieces. Both sand and aluminum oxide (Al_2O_3) are used. By masking the workpiece, the surface effect can be confined to narrow areas, so various designs can be marked on the glass surface. The technique is also called sand blasting or sand carving. Variable cuts, including deep sections, can be made, if desired. The process is also used to create a matt surface in the workpiece. Grooves and holes can also be made. The operation is rapid. Masks are made from rubber, lacquer coatings, lead foil and heavy paper masking tape. The process is often used for decorating vases, bowls, and art glass.

A5f. ***acid etching*** - uses an acid solution to etch the glass. One approach for acid etching designs in glassware, called needle etching, is to coat the entire glass object with a coating of wax by dipping or brushing, and then scribing lines in the wax. Scribing the wax coating may be manual or may be done with an engraving machine. The workpiece is then immersed in the acid bath. Another approach, called plate etching, is useful for fine detailed etchings such as those including floral patterns. With this method, a wax mixture is transferred from an etched metal plate to pottery printing tissue and thence to the glass surface before immersing the workpiece in acid. A 60 percent hydrofluoric acid bath is used. The glassware is protected in other areas not covered by the transfer by brushing on or dipping in the wax resist to coat areas that are not to be acid etched. After engraving, the glass workpiece is rinsed and the wax is removed with hot water or by vapor degreasing. The etched area is typically filled with a paste or glaze of contrasting color. Graduations of scientific glassware as well as decorations of other glass products are etched by this method. Acid etching is also used to put a matt finish (or frosting) over a large area of a glass workpiece, and on some incandescent light bulbs.

Another method for acid etching is to use a paste of ammonium bifluoride, hydrofluoric acid, and barium sulfate, and to brush, screen, or stencil the paste on the surface of the glass workpiece. The paste acid etches the surface where it makes contact.

A5g. ***shrinking*** - is a method for making accurate internal diameters in glass tubing. The process uses a vacuum to reduce the tubing diameter against a mandrel. The mandrel is machined from alloy steel to the dimension desired with allowance for the thermal expansion coefficients of both the glass and the mandrel material. The mandrel is placed in the tubing; the tubing is heated to the softening point; the ends are sealed and a vacuum is applied to the space between the mandrel and the tubing bore. The tubing collapses against the mandrel. When the tubing has cooled, the mandrel is withdrawn. Accurate bores are produced in this manner. The method is used to make tubes for fluid flow meters[4].

A5h. ***staining*** - Glass can be stained for decorative reasons or, in laboratory glass, to filter out light rays that may be harmful to biological solutions. Oxides or salts of copper and silver are mixed with an inert material, commonly, kaolin (clay) or ocher. Linseed oil, glycerine, alcohol, turpentine, water, or a combination of them is blended into the mixture, which is then applied to the glass. When the glass is heated almost to the transformation (softening) temperature, the ions of copper or silver migrate into the rigid glass solution. The glass takes on a permanent transparent color, usually red, amber, or yellow. A black tint can be produced after silver migration by subjecting the glass to hydrogen or another hot reducing gas. Vases, goblets, and other drinking glasses and blown ware are sometimes stained.

A5i. ***decorating with vitrifiable colors (vitreous enamels)*** - These materials are glasses that have low melting temperatures and contain inorganic pigments. Various glass formulations may be used. Their melting temperatures are as low as 900°F (480°C) and as high as 1400°F (760°C). The lower melting temperature glasses used are softer and have limited resistance to acids or alkalis or other aggressive or corrosive chemicals. They are also less apt to be able to provide opaque coloring. These vitrifiable colors consist of the pulverized glass in a liquid vehicle such as turpentine. They are applied to glass workpieces by various methods: spraying, silk screening or decals.

The workpiece is then fired at the temperature required to fuse the colors and make them adhere to the workpiece. This temperature is below the level that would deform the workpiece. Applications include coloring the entire workpiece or an expanded area, or to specific portions of the glassware. Colors applied to limited areas may be for decorative or artistic purposes, or to provide functional markings such as graduations, scales, ruled lines, or numbers. Housewares, architectural spandrels and other components, thermometers and other laboratory devices, signs, containers, and lamps are colored or decorated with vitrifiable colors. (See *enamel, vitreous* in the products section.)

A5j. ***metallic coating*** - Metallic coatings for glass are primarily used for decorative purposes and are made chiefly from platinum, palladium, and silver- and platinum-gold alloys. They are applied to the glass in liquid or paste form, the liquid being a suspension of metal particles in oil. When a small amount of glass flux is added to the liquid to aid bonding or dispensing, the resulting material is a paste that can be spread on the glass surface. Printing, silk screening, stenciling, and spraying may be used to apply the metallic material, depending on the effect wanted. When the coated glass workpiece is fired, the metals diffuse into the glass and coat its surface. An oxidizing furnace atmosphere is used. After firing, the metal can be polished or burnished to a bright finish. This approach is used for various decorative effects, for example, to coat the rims of higher-priced drinking glasses. It is also used to provide conductive, printed electronic circuits.

Other metallic coatings for glass involve the spraying of molten metal on hot glass (as described for metal substrates in 8F4), vacuum deposition (8F3), and the spray coating of tin oxide with other ingredients that form an iridescent film with properties of improved alkali resistance, electrical conductivity, and infrared ray reflection. Mirrors are coated with silver nitrate, which is converted to silver metal by the action of glucose. A stannous chloride rinse is also involved. Metal coatings on glass are used in the production of some small trimmer capacitors and glass inductors for high-frequency electronic circuits.

A5k. ***organic decorating*** - Organic enamels are used to decorate and mark glass products, and have the advantage of providing a wider variety of colors than are available with vitrifiable coatings. Adherence may be a problem, however, because glass is a difficult substrate for paint adherence over a long period, particularly if there are temperature changes, moisture, and handling stresses on the coating. Organic enamels are oven cured, typically at 450°F (230°C) for 15 min. Application can be by any painting method, silk screening, stenciling, offset printing, or dipping. Both one-part and two-part enamels are used. Common applications are the marking of bottles for soft drinks, wine, beer, and other beverages, food containers, cosmetic jars, Christmas ornaments, lighting fixtures, and tableware.

A5l. ***silk screening (screen printing)*** - is a printing method described in 9D4b, Fig. 9D4b and 8I7b. It can be utilized to put markings or decorations on glass surfaces.

A6. ***glass fiber manufacturing*** - Glass fibers are made for several major applications including textiles, plastics reinforcement, glass wool for thermal insulation, and optical fibers for two classes of use:

1. traditional fiber optics, the transmission of illumination or images, and,
2. communications fiber optics, the transmission of information such as computer data or telephone messages with pulses of light.

The methods used to produce fibers for these applications are similar but have some distinctive differences. Except for the communications fiber, all the methods start with molten glass flowing through small orifices to form strands of glass. All the methods have some means of attenuating the strands, reducing their diameters to those of useful fibers. Fibers for optical data transmission and most for textile applications are drawn into continuous strands, while those for insulation are made into discontinuous strands.

Optical fibers are composed of two different glasses with different properties. The inner core of the fiber is highly refractive; the glass surrounding it, the sheath, is of lower refractive index. Textile fiber applications include fabrics for draperies and curtains, and tire and plastics reinforcements. With many of the fiber manufacturing methods, the molten glass may first be formed into glass "marbles", which are later fed into a melting pot and drawn into fiber.

A6a. ***mechanical drawing of continuous textile fibers*** - One production method is shown in Fig. 5A6a. Molten glass flows from many small holes in a platinum bushing in the bottom of a forehearth and is drawn into fibers of 4 to 20 microns, μ, (0.00016 to 0.00079 in) diameter. (The glass may also come from glass marbles remelted in an electric furnace.) To achieve the small diameters, the fibers are drawn at speeds of over 5000 ft (1500 m) per min. An organic sizing is applied to be a protective coating, and the fibers are gathered into one strand and wound on a tube for later processing.

In another variation, shown in Fig. 5A6a-1, the glass flowing from the bushing is blown immediately with air to attenuate it into long, discontinuous fibers. These drop onto a rotating collecting drum, from which they are withdrawn and gathered together into one continuous multi-filament strand. The strand is wound on a spooler that runs at a higher peripheral speed than the web, so that the strand is elongated into a textile sliver. This sliver is later twisted and plied with others to form a coarse yarn. It may then be drafted and twisted again to form a fine yarn.

A6b. ***steam blowing*** - Streams of molten glass flowing from a melting tank through sieve-like platinum bushings are impinged upon by jets of steam. The jets approach the glass streams at a small included angle, and push them at a faster rate, causing them to draw into finer fibers. If the steam jets are strong enough, the fibers will break into shorter lengths. The strength of the steam jets determines how discontinuous and fine the final fibers will be.

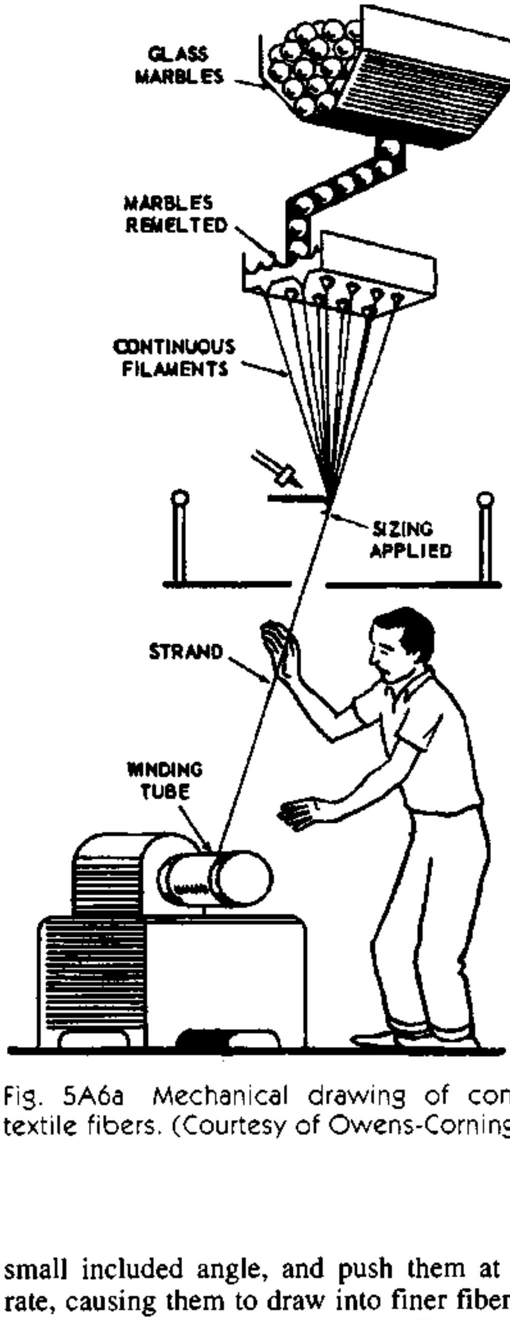

Fig. 5A6a Mechanical drawing of continuous textile fibers. (Courtesy of Owens-Corning.)

The fibers can be processed in several ways. When used to make thick pads or "wool", they are sprayed with a binder and fall on to a conveyor where they pile up into wool. The binder is dried and the wool is cut into discrete batts of fibrous

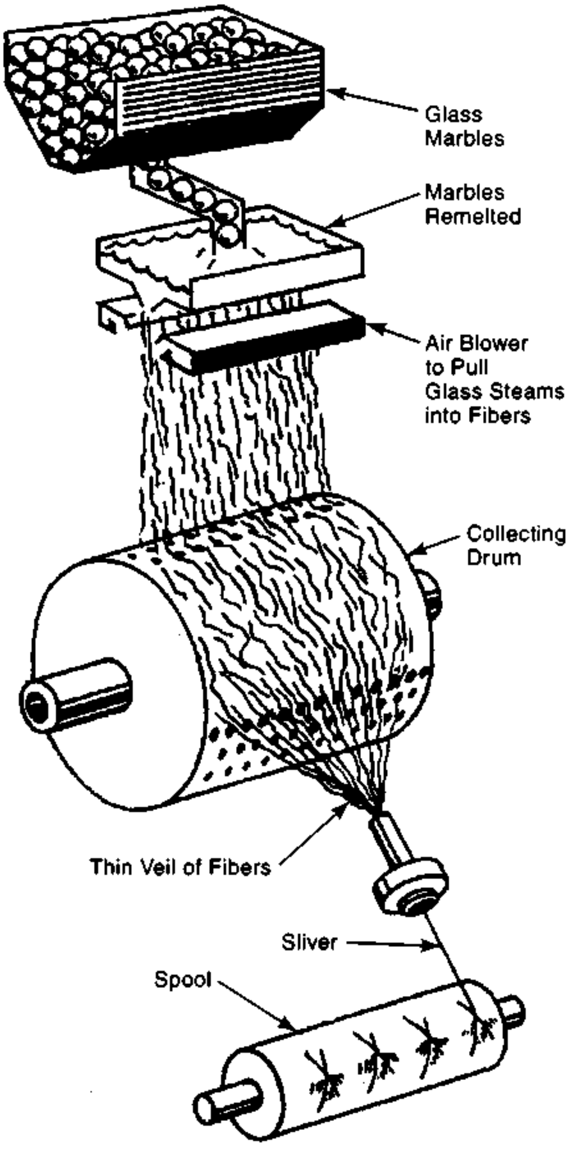

Fig. 5A6a-1 Manufacture of staple textile fibers. Air blows molten glass into fine streams that are gathered from a collecting drum to become a multi-filament strand. The strand is drawn into a textile sliver because the surface speed of the spooler is faster than that of the drum. (Courtesy of Owens-Corning.)

glass. Fig. 5A6b illustrates this process. When made into glass mat, the fibers are allowed to fall into a thin, web-like mat that is then immersed into a bath of binder and then passed through a drying oven. A major use for such mat is the reinforcement of fiber glass-reinforced plastic products. This process variation is shown in Fig. 5A6b-1.

A6c. ***flame blowing (superfine process)*** - involves two major steps: 1) large diameter fibers are drawn from the melting tank through multiple platinum bushings. 2) the fibers move to a high velocity chamber where they are reheated to the melting point and propelled by a high velocity burner. This treatment attenuates the fibers into fine diameter discontinuous filaments. They may be also coated with binder in the same operation. The operation is shown in Fig. 5a6c. The process is used to make ultrafine fibers for papermaking, and for fine fiber-glass wool.

A6d. ***rotary wool forming process*** - Rotary forming is the prime method used for the production of fiberglass wool insulation. Molten glass is fed into a rapidly rotating cylindrical container that has a large number of small holes (approximately 20,000) in the bottom. The molten glass flows through these holes and is thrown outward by centrifugal force. The glass filaments encounter a high velocity stream of gas that attenuates them into discontinuous fibers. The gas may be steam, air, or a combustion gas. The fibers are sprayed with a binder as they fall to a conveyor below. The binder preserves their open structure. Fig. 5A6d shows the process. The air spaces between the fibers account for the excellent insulation properties of the wool. The weight of the loose wool ranges from about 2 to 12 lb/ft^3 (32 to 192 kg/m^3). Since slag, or lower-quality raw materials can be used in the process, (without adverse affect on insulation properties and with a possible improvement in chemical resistance compared to window glass) the term, mineral wool or rock wool is sometimes used for the resulting product.

A6e. ***methods for production of traditional optical glass fibers*** - These fibers have two portions, a central core that transmits the light, and a sheath that, due to a difference in its properties, helps ensure that the light does not escape from the core. The sheath also protects the central core from scratches and other surface damage, which would allow the light to scatter and leak from the core.

One method of producing this kind of optical glass fibers is the rod-tube process. A rod of

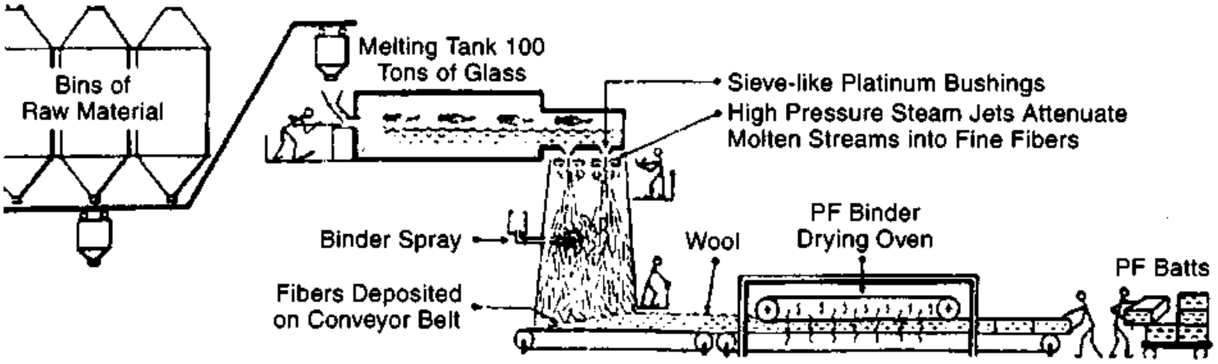

Fig. 5A6b Steam blowing of glass fiber to form glass wool. (Courtesy of Owens-Corning.)

highly-refractive glass is placed inside a tube of lower-refractive glass. The pair are heated in a furnace so that both components become soft. They are then drawn together into a single thin fiber with core and sheath of different materials. The fiber is then wound on spools or drums.

Another method is the two-crucible process in which the two glasses are melted separately but drawn through dual concentric orifices to form a fiber. Fig. 5A6e illustrates both the rod-tube and two-crucible processes schematically.

Optical glass fibers are also normally bundled together so that sufficient illumination is transmitted or, when an image is to be transmitted, so that each fiber transmits a portion of the total image. In some applications, the bundled fibers are fused

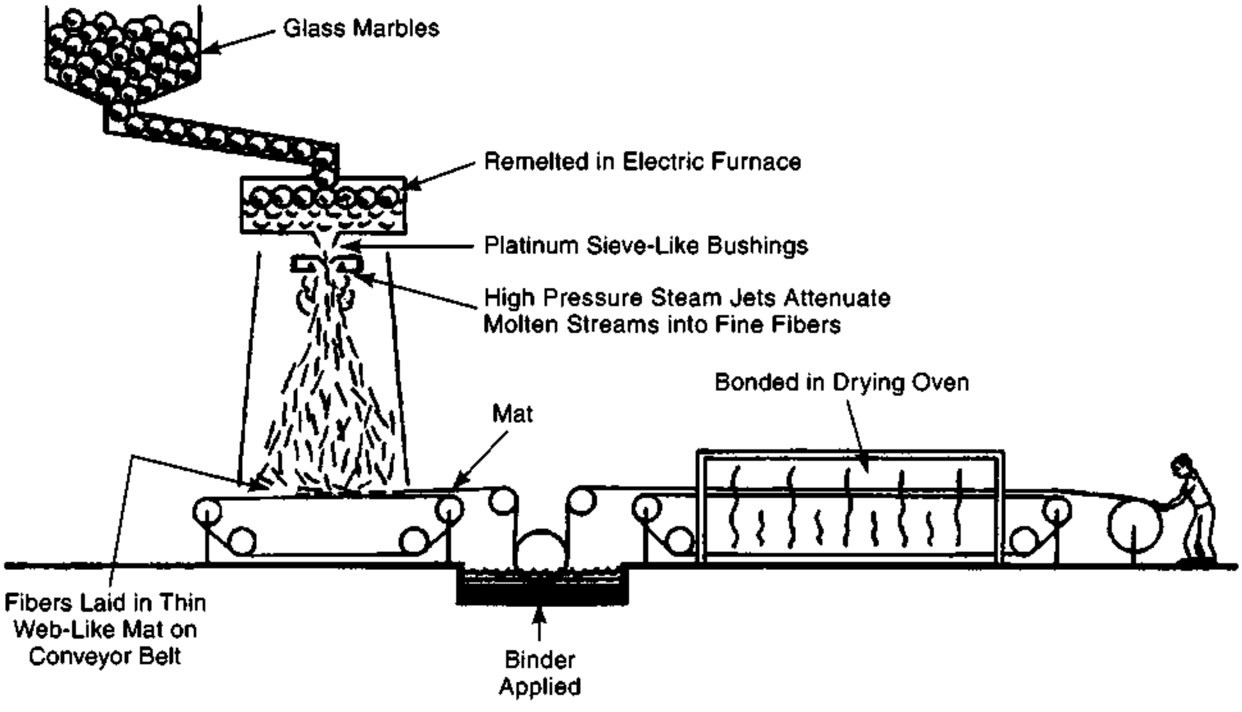

Fig. 5A6b-1 Steam blowing of glass fiber to produce matting for reinforcement of plastics components (Courtesy of Owens-Corning.)

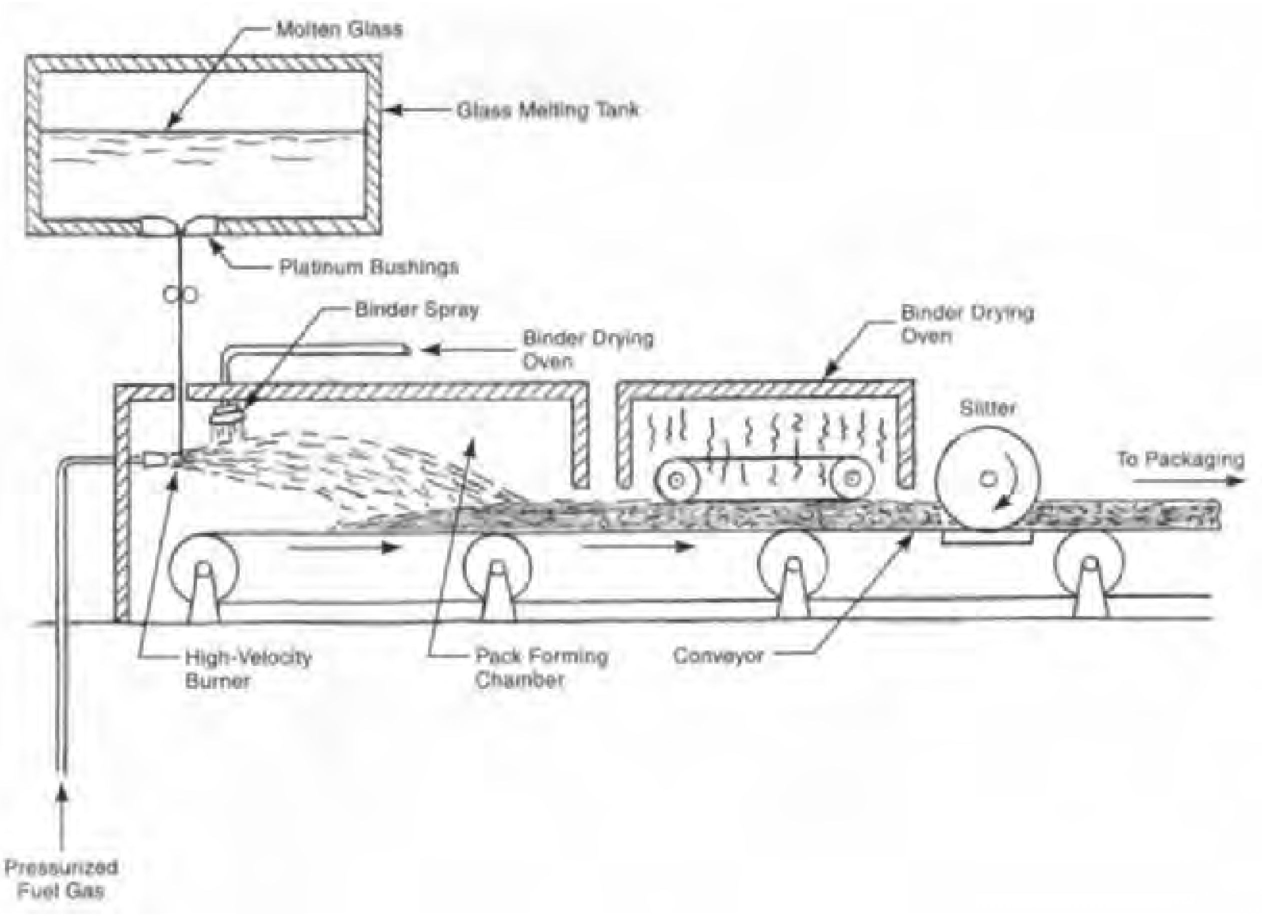

Fig. 5A6c The flame process for making superfine glass fibers.

together to provide greater strength. Sometimes, the bundle of fibers is reheated and redrawn to a smaller cross section, and then bundled with other bundled stacks of fibers. The redrawn bundles may be reheated, redrawn, and rebundled, until there is a sufficient number of fibers in the bundle and the bundle is small enough for the application planned. Light absorbing strands may be incorporated in the bundles to insure that light does not leak from fiber to fiber. Bundled optical glass fibers are used in medical applications to view internal bodily organs for diagnosis and surgery. The bundles are also used for lighting of instrument panels of aircraft, automobiles, and scientific equipment, and for remote inspection and sensing in process equipment[6].

A6f. ***methods for production of optical communications fibers*** - These fibers, even more strongly than traditional optical fibers, need the property of low-loss transmission of digital light pulses and the property of containing the light within the fiber. They normally differ from much traditional optical fiber in that, instead of having a distinct core and sheath with different refractive indexes, there is a gradual transition in refractive index from the core material to the outer cladding. This arrangement provides a clearer signal at the receiving end of the fiber. Low-loss transmission over long distances also requires a high level of purity in the glass. Silica glass is used because it can be made to the level of purity required. However, silica glass is more difficult to process by conventional methods than other glass; silica has high viscosity and is volatile at the temperature needed to melt it when it is in a crystalline phase[6].

One common process used for optical communications fibers starts with $SiCl_4$ in liquid form. The liquid also contains certain dopants (germania and

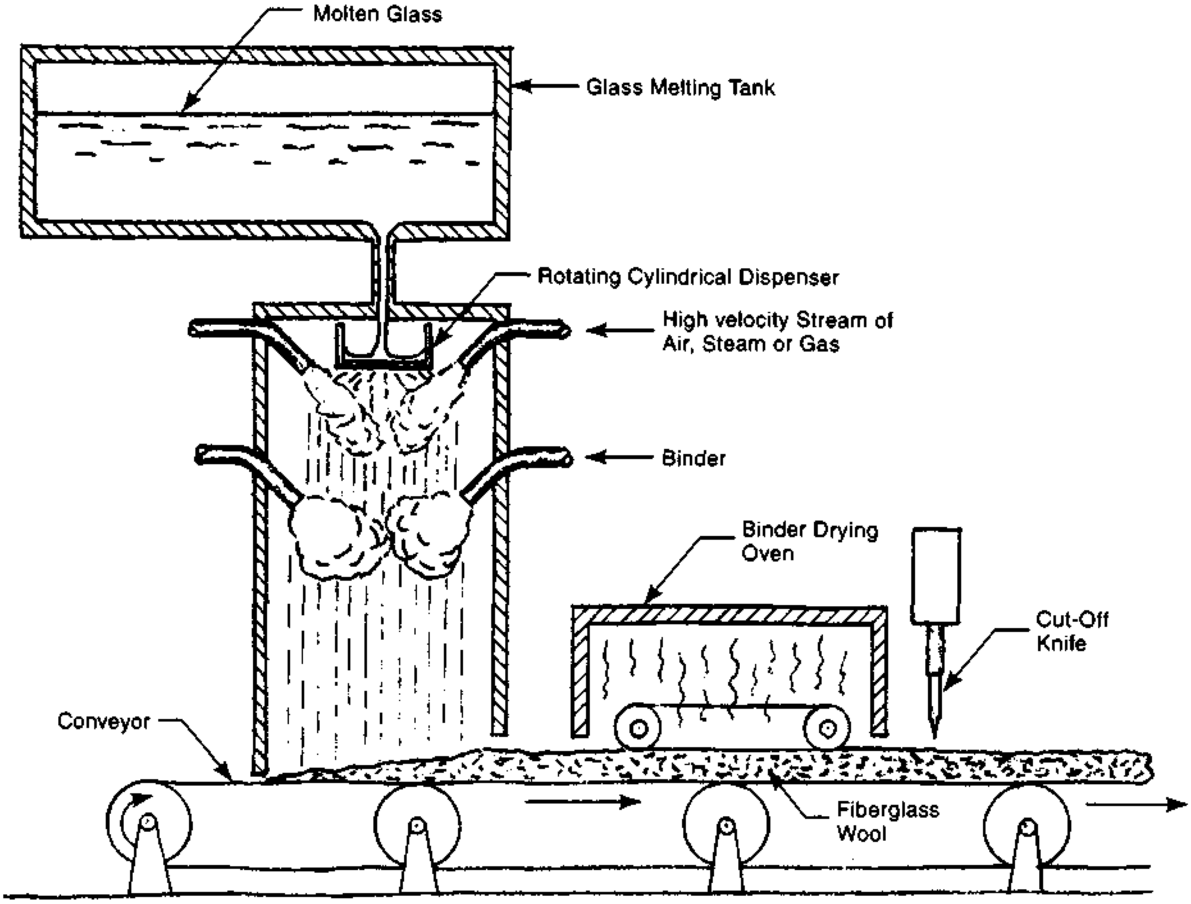

Fig. 5A6d The rotary wool forming process.

fluorine), which control the refractive index of the glass. A carrier gas (oxygen or helium) is bubbled through the liquid at a controlled temperature. This converts the $SiCl_4$ to a vapor. The vapor is fed into a special burning chamber containing a high-temperature gas-oxygen flame. The gas is either natural gas or hydrogen. A hydrolysis reaction takes place that yields silicon oxide and oxides of the dopants. These oxides occur as molten droplets of transparent "soot".

There are two basic process variations in how the soot is collected and processed further. In one variation, the outside process, the soot is collected on a rotating mandrel rod. The first soot collected on the rod is of glass that will form the core of the fiber; then glass material that will form the sheath is processed and collected. There can be a gradual transition from core to cladding material. The preform of soot particles is removed from the mandrel rod and heated to fuse the particles together more strongly. It is treated, first with chlorine gas and then with helium to remove trapped water and air, both of which would impair light transmission. This process variation is sometimes referred to as OVD for outside vapor deposition.

In the other major process variation, the inside process, the $SiCl_4$ and dopants are fed into a fused silica glass tube. Heat from a burner outside the tube causes a reaction that results in the deposit of soot on the inside of the tube. The first soot deposited is of glass material that will form the outer portions of the fiber. Then the formulation is progressively modified so that the final glass deposited on the tubing walls is of glass that will form the fiber's core. No moisture is contained in the soot because the source of the moisture, the gas-oxygen flame, is

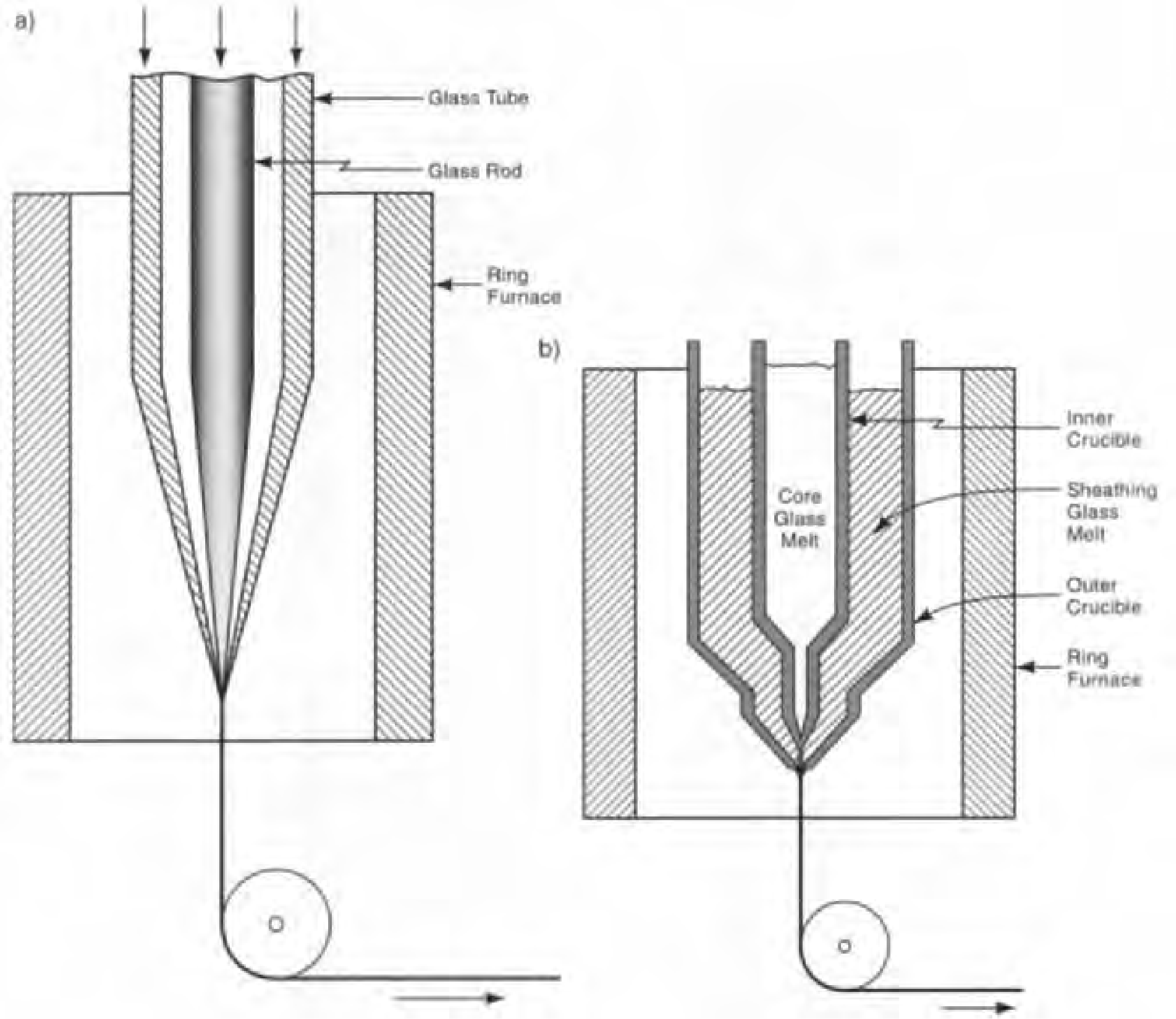

Fig. 5A6e Two methods for forming traditional optical glass fiber: a) the rod-tube process. A glass rod and glass tube arranged concentrically are melted together and drawn into fiber. b) Two concentric crucibles, one containing melted core glass and the other melted sheathing glass, discharge into a common opening from which the fiber is drawn.

prevented by the glass tube from contacting the soot. The soot particles are hot enough to fuse together inside the tube, layer by layer. After sufficient glass soot is deposited in the tube, the tube and its contents are collapsed with the aid of heat and an internal vacuum to form a solid rod. The fused silica glass tube will form the outer layer of the eventual fiber. This process variation is sometimes referred to as MCVD (modified chemical vapor deposition).

The changed glass material in different layers for both process variations provides an "index gradient" that will contain light in the core of the fiber. Fig. 5A6f shows both these process variations for collecting the silica glass soot. The next step in the process for both variations is to draw the preformed glass rod into fiber. The drawing process is the same in principal as other fiber drawing but incorporates significantly higher levels of cleanliness and precision. Commercial drawing

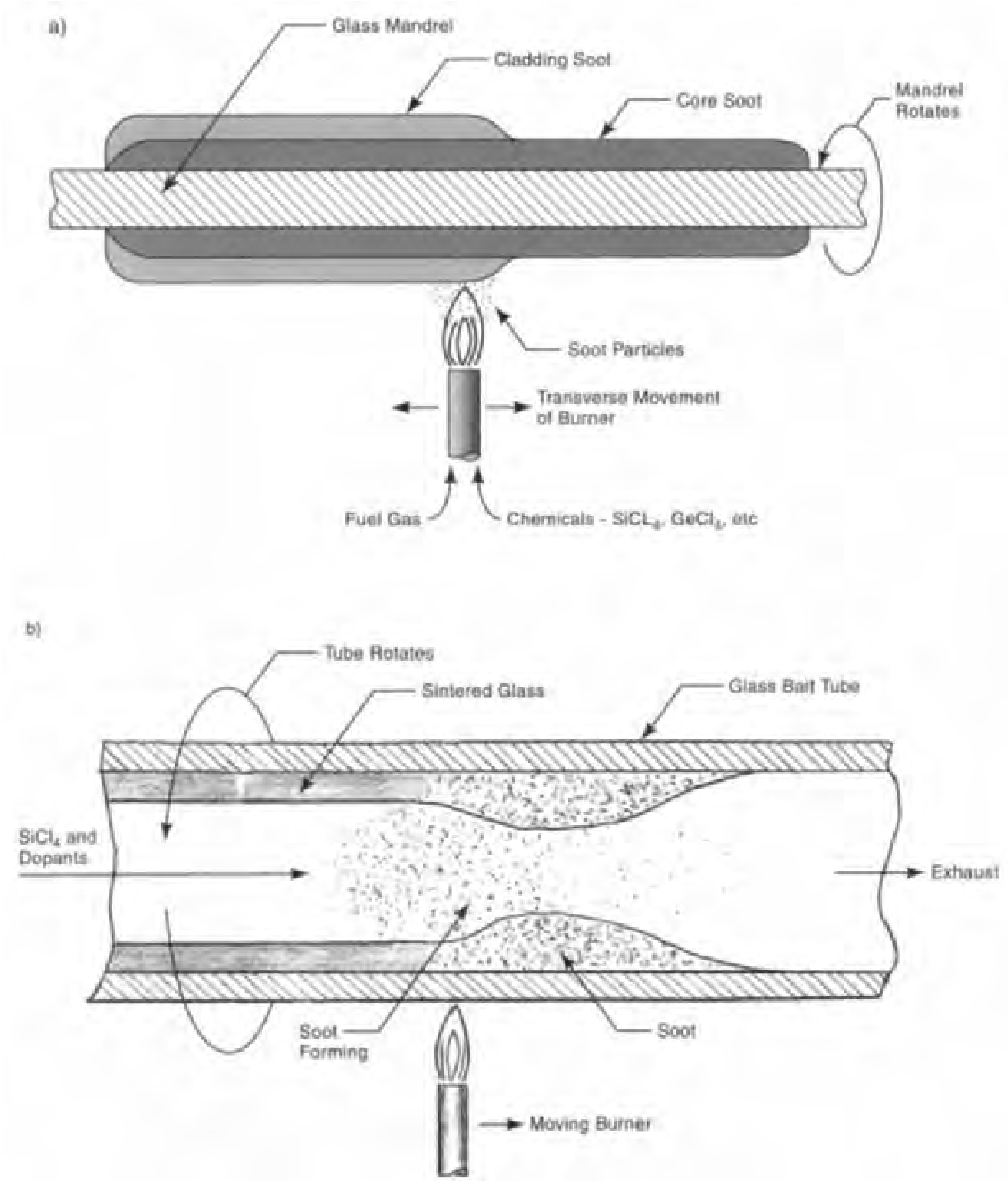

Fig. 5A6f Collecting silica glass "soot" for optical communications fibers: a) The outside process (DVD process) - $SiCl_4$ vapor and dopants fed into a high temperature gas-oxygen flame yield transparent soot, which is collected on a rotating glass mandrel. The mandrel is later removed and the soot is sintered and then drawn into a long fiber. b) The inside process (MCVD process) - The chemical ingredients are fed into a glass tube and do not directly contact the flame. Soot is deposited on the inner surface of the tube and is sintered by the heat of the moving burner. The glass tube becomes the outer sheath of the fiber when the tube and its soot contents are further heated and drawn into fiber.

towers are large, and drawing speeds for the final fiber are rapid. The communications fiber produced may have a core diameter of only 0.0003 in (8 microns) though the fiber diameter, including cladding, is normally about 0.005 in (125 microns). Light intensity loss in such fibers is less than 1 percent in one kilometer (0.6 mile) of transmission distance.

The final step in the manufacturing process, prior to testing, is to coat the fiber with an organic material, sometimes in several layers, for protection of the glass. UV or heat-curing polymers are used. The fiber is tested for strength before spooling. Tests are also made of the fiber's light transmission qualities against a series of specified characteristics.

A7. *manufacture of other types of glass*

A7a. ***glass ceramics manufacture*** - Where conventional glass is a supercooled liquid (non-crystalline), ceramics consist of crystalline particles bonded together. It is possible to convert glass to ceramic form by controlled devitrification, the generation of crystals in the glass structure. This creates products with properties significantly different from those of products made from conventional glass. The process involves the incorporation of nucleating agents in the glass batch, and an operation sequence that uses some specific time-temperature cycles to create crystals.

Glassware to be converted to the ceramic form is first fabricated by pressing, blowing, rolling, or casting. The special nucleating agents in the workpiece are then activated to form small crystals in the structure. This nucleating process can be effected by a special heat treatment, that follows a particular time-temperature curve. Another method that may be used, depending on the glass composition, exposes the workpiece to ultraviolet light followed by a heat treatment. Crystals are then grown by raising the workpiece temperature into the devitrification range for the glass composition involved. The resulting crystals are smaller and more uniform that those of conventional ceramics and, in total, they occupy from 50 to 90% of the volume. The glass ceramic product is normally opaque and has greatly increased strength and hardness compared to conventional glass, greater rigidity at high temperatures, and higher thermal conductivity. Glass ceramics can be formulated with almost no thermal expansion, providing superior thermal shock resistance. Because of these properties, glass ceramics are used for ovenware, cook tops, mirror supports for astronomical telescopes, radomes of missiles, and length standards.

A7b. ***photosensitive glass manufacture*** - is related to the process described above for manufacture of glass ceramics. Some glass formulations are photosensitive. Slight amounts of silver compounds and cerium oxide are key ingredients in the photosensitive effect. Exposure to ultraviolet radiation activates the glass so that, under heat treatment, crystals form. The UV light causes electrons from cerium oxide to migrate, but the electrons are trapped by silver ions when the glass is heated. This process forms metal atoms, which immediately transform into metal colloid particles that act as nuclei for devitrification. Further heating causes devitrification, creating a brown or yellow coloration. If the areas exposed to UV radiation are limited with a mask or photographic film, only the exposed areas will later exhibit the color. If bromine and chlorine are present in the glass, different colors can be created. Glass components for signs, and clock and radio faces can thus be produced.

Another effect can be created because of the fact that the devitrified areas are more easily etched by hydrofluoric acid. This provides the basis for selective precision etching of special shapes and perforations. Printing dies and display components can be made with this approach.

A7c. ***cellular glass (foam glass) manufacture*** - starts with a mixture of pulverized glass and a gas-generating material such as pulverized carbon. This mixture is loaded into metal trays and covers are positioned. The trays are placed in a furnace where the glass is melted. The gasifying material forms many small bubbles in the glass, which expands to fill the trays. A closed cell structure is formed. After cooling, the foamed glass is removed from the trays and cut into blocks or other shapes. Typical densities are on the order of 10 lb/ft^3 (160 kg/m^3). The finished material is frequently used as a self-supporting thermal and acoustical insulation. Buildings, cold storage structures, and piping, are particular applications. Another application is use in flotation devices.

A7d. ***glass microsphere manufacture*** - Spheres of glass with a diameter of 0.008 in (0.2 mm), or less, are used in making reflective surfaces, for reinforcement of plastics, and for micro-blasting metal and other surfaces for polishing. There are several methods for manufacture of such spheres[2]: One method is similar to the shot-tower operation used in the manufacture of the metal pellets in shot gun shells. Crushed glass, screened for the proper particle size, is fed into the top of a heated vertical tubular furnace. The glass particles melt and, because of surface tension, assume a spherical shape as they fall to the bottom of the furnace. The lower part of the furnace is cooler, and the spheres solidify before they reach the bottom. Another method uses a blast of upward flame. The crushed glass particles are fed into the furnace, melt, and are blown upward into a cooler zone where they solidify and are collected. Another approach sprays a thin stream of molten glass into a chamber where the stream breaks it up into small spherical droplets, which then cool and solidify, fall to the bottom and are collected.

Microspheres are used in reflective highway signs and projection screens, and in the finish coatings of reflective foils. The spheres act as optical lenses to direct light so that it is more strongly reflected. Microspheres are also used as a reinforcement in molded plastic parts to provide them with better dimensional stability, surface hardness, rigidity, and sliding properties. Glass spheres are used in shot peening to provide a more glossy surface, for fatigue-failure resistance, and for sheet metal forming, as described in sections 2J7 and 8H of this handbook.

A8. *powdered glass processes*

A8a. ***dry pressing and sintering*** - Glass in powder form, with a binder, can be pressed in a die of the desired shape and then sintered to fuse the powder particles together. This process makes a solid part, albeit one with many small trapped air bubbles. The process is similar to that used to make metal parts from metal powders (See 2L1). To make the powder, crushed glass is further pulverized in ball mills. It is then screened so that the resulting powder has the proper particle size and distribution. The binder, mixed in before pressing, holds the pressed workpiece together while it is in the "green" state. When sintered in an oven, the binder burns off and the particles then fuse together. The finished object is opaque white in color because of the trapped air. Sintered glass is used to make small parts with holes, parts that may be difficult to make by pressing or other methods.

A8b. ***slip casting of glass*** - uses essentially the same ball-milled glass powder as that used in dry pressed and sintered parts but, in this method, the powder is mixed with water to form a liquid slip. This slip is poured into a plaster of Paris mold. The mold absorbs the water from the slip, providing a casting that is firm enough to handle. The casting is additionally dried after it is removed from the mold and before it is fired. Firing fuses the glass particles together. Slip casting is used to make larger parts in very low quantities, in shapes that would be difficult or unfeasible with other methods. This process is also used for ceramics, as described below in paragraph B8.

A8c. ***fritted filter manufacture*** - uses methods that are similar to those used in dry pressing and sintering. However, the glass powder, though from crushed glass, is not ball milled. Instead, it is screened to a particular particle size distribution, depending on the pore size desired in the filter to be made. Sometimes glass fibers are used. A binder is added and the material is then pressed and sintered. The desired porosity is achieved by controlling the particle size and the pressing and sintering process. The filters, in disc or tubular form, are joined to solid glass tubes or crucibles. Glass filters are used in laboratories for gas washing as well as filtering.

B. Ceramics Processes

B1. ***the nature of ceramics*** - Ceramic parts are hard, highly chemical and corrosion resistant, strong in compression, non-flammable, usually dielectric, and capable of use at high temperatures. They are normally brittle and limited in tensile strength. Most have crystalline structures. Ceramics can be classified into the following groups:

1. whitewares which include china, tiles, earthenware, electrical insulators and other components, mechanical parts, and porcelain,
2. refractories - heat-resistant and insulating bricks and other items,
3. structural clay products such as bricks, clay pipe, and tiles,
4. vitreous enamels to coat steel, cast iron and other metals, and
5. glass.

Ceramics can be made from a wide variety of material formulations although many have clay as a basic raw material. They can also be classified into two basic groups: Traditional ceramics (natural ceramics) include standard products in the above five groups. Advanced ceramics are premium materials made to more exacting specifications and used for applications such as engine components, cutting tools, medical implants, bearings, valves, and various electronic components. They are also sometimes referred to as high-technology ceramics, modern ceramics or fine ceramics. They include oxides including Al_2O_3, MgO, BeO, ZrO_2, ThO_2, and $MgAl_2O_4$, magnetic ceramics ($PbFe_{12}O_{19}$, $ZnFe_2O_4$, and $Y_6Fe_{10}O_{24}$), silicon carbide (SiC), nuclear fuels, (uranium oxide and uranium nitride) and other nitrides, carbides and borides[7]. Except for glass and the glass binders used in many ceramics, all ceramics have a crystalline rather than an amorphous structure.

B2. ***ceramic materials*** - are inorganic and nonmetallic. The traditional ceramic raw material, clay, consists chiefly of silica (SiO_2) and alumina (Al_2O_3). Clay is the prime ingredient in pottery, bricks, tiles, pipe, sanitary ware, dinnerware, china, and pottery. Quartz and feldspar are often added to clay. Water is added as an aid in forming. Ceramics are made from oxides, carbides, nitrides, silicates, fused cordierite and titania. Refractories are made with magnesium oxide and chromite (Cr_2O_3) as well as silica and alumina. Electronics parts are made from clay and other standard materials, beryllium oxide, zirconia (ZrO_2), boron nitride, and barium titanate. Structural ceramics include silicon nitride, silicon carbide, zirconia, alumina, sialon (a combination of silicon nitride, silica, alumina and aluminum nitride), boron carbide, boron nitride, titanium diboride, and composites of ceramics. These materials are used in high-stress, high temperature-resistant applications, including turbine blades.

Some ceramic materials are manufactured rather than mined from the earth. These, and more refined materials made from mined raw materials, are sometimes referred to as advanced ceramics or modern ceramics. Silicon carbide and silicon nitride, and other carbides, nitrides, and borides are made by chemical reactions. Alumina and magnesia (MgO) occur in nature but, for industrial applications requiring particular properties, are made from hydroxides. Cubic boron nitride is used as an abrasive. Cermets are combinations of ceramics (oxides, carbides, nitrides, or carbonitrides), and metals.

B3. ***ceramics operation sequence*** - The operation sequence for making ceramic parts, can vary significantly, depending on cost factors, the materials involved, and the shape, complexity, and application, of the parts being fabricated. However, most ceramics are made from powdered material. A typical sequence for making such parts involves the following:

1. preparation of the powder: grinding, classifying, and mixing, and
2. a forming operation such as pressing, jiggering, casting, or extruding, etc.,
3. drying,
4. firing and
5. finishing.

Fig. 5B3 is a block diagram of the typical operation sequence.

B4. ***ceramic material preparation*** - Mined clays and other ceramic materials are crushed and ground to a fine powder. The material then is screened or undergoes flotation, filtering, or magnetic separation to remove out-of-size or undesirable components. The resulting powder is mixed with various other materials, including various metallic oxides as fluxes, organic binders, plasticizers, and, often, water. Ball milling or hammer milling equipment may be used to remove any agglomerated material and ensure thorough mixing.

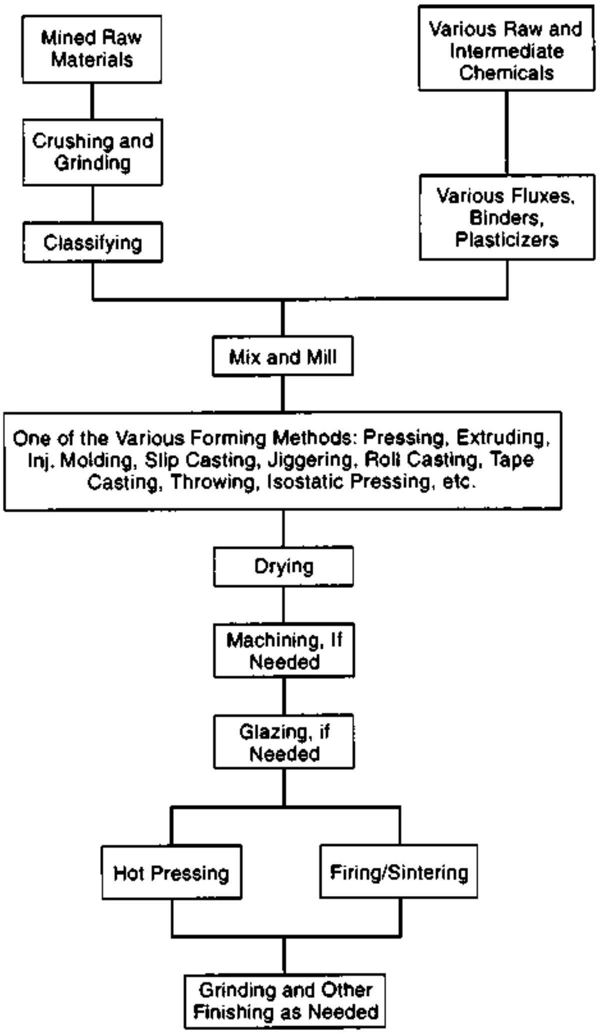

Fig. 5B3 Chart of the sequence of common manufacturing operations for ceramic products.

B4a. ***material preparation for advanced ceramics*** - Powders for advanced ceramics may be made with the same processes indicated for standard ceramics but with stricter standards for material purity, particle size, and mixing. Advanced ceramics are also prepared by several sophisticated processes that provide a still higher purity, better particle size distribution, and more uniformity of characteristics from lot to lot. Raw materials may undergo chemical reactions that create intermediate compounds that are more easily purified and then chemically converted to the oxide or other final compound. Processes that may be used include vapor deposition, precipitation, and calcination.

Vapor-phase production uses reactant gases that are mixed and heated in a suitable chamber. Particles nucleate and grow from the gas phase.

Precipitation may be carried out with one of several process variations. In addition to conventional precipitation, precipitation under pressure (hydrothermal precipitation), and coprecipitation may be used. The latter approach provides better mixing if several oxides or salts are included in the powder mix. Precipitation is a key procedure in the production of high-purity alumina (Al_2O_3) from bauxite.

The aluminum hydroxide in bauxite is first dissolved in caustic soda. The liquid is then separated from non-soluble material by filtering, and the resulting aluminum trihydrate is precipitated by the addition of seed crystals and by changing the pH. Very fine alumina powders result and they have highly desirable properties when used in ceramics[7].

Calcination is common in the production of advanced ceramic powders. With this process, the raw material is heated to a high temperature to decompose salts or hydrates or to remove volatile ingredients, chiefly water. The process is controlled to provide the desired material properties. After the heating operation (calcination), the powders are ball milled to break the bonds between crystallites, which are formed by diffusion during the calcination. A very fine powder can be produced. Magnesium oxide, MgO is often made by extracting magnesium hydroxide from seawater and calcining it to convert it to the oxide. Magnesium oxide is used to make high-temperature electrical insulators and refractory brick.[7].

B5. ***pressing*** - is the most common ceramics forming operation and is the preferred method, if it is feasible. Most pressing is similar to pressing of glass or compression molding of plastics in that the material is placed in a metal mold and then compressed with strong force from a descending punch. Mechanical or hydraulic presses are used. Lubricants and binders may be included in the material. Binders may be organic or inorganic. If the ceramic mixture is relatively dry (0 to 5% water), the method is known as dry pressing, and the operation is very similar to the compaction of powder metal parts. High pressures and precision dies are used. Floor and wall tiles, spark plug insulators, ceramic capacitor components and enclosures are dry pressed.

If the ceramic mixture is relatively wet (wet pressing), the material contains more water and is capable of greater flow when pressed. The operation becomes more similar to the compression molding of plastics where the plastic material flows into remote areas of the mold. Wet pressing is used for somewhat more complex parts than dry pressing but the greater water content of the material leads to greater dimensional variations and larger tolerances than those needed for dry-pressed parts.

Generally, pressing, especially dry pressing, is used when the part's shape is relatively simple. After pressing, the part may be further shaped by additional forming or machining. Fig. 2L1c (in chapt. 2) shows press forming of powder metals, and the methods shown are also applicable to the pressing of ceramic powders.

B5a. ***isostatic pressing*** - Some pressing is isostatic, using a mold made of a flexible elastomer, and enclosed in a pressure vessel. Pressure in the vessel, transferred by a medium of water, oil or glycerine, compacts the powder in the mold. This approach is used with spark plug insulators, which have a central metal mandrel to form the center hole and flexible elements to rough form the outer surfaces. They are then finish-machined in the green state before the part is fired. However, in many other applications of isostatic pressing, the part can be finished to final shape without machining or further forming. The advantage of isostatic pressing is that pressing occurs in all directions, providing more uniform compaction. Fig. 5B5a shows the process schematically.

B6. ***injection molding*** - Injection molding machines, similar to those used for plastics injection molding but without the band heaters needed for plastics, are often used to mold green parts from ceramic paste. The process is useful for large-quantity production of parts with greater complexity than those produced by pressing. Relatively wet material mixtures with organic binders are used, but the binders must be removed before final firing.

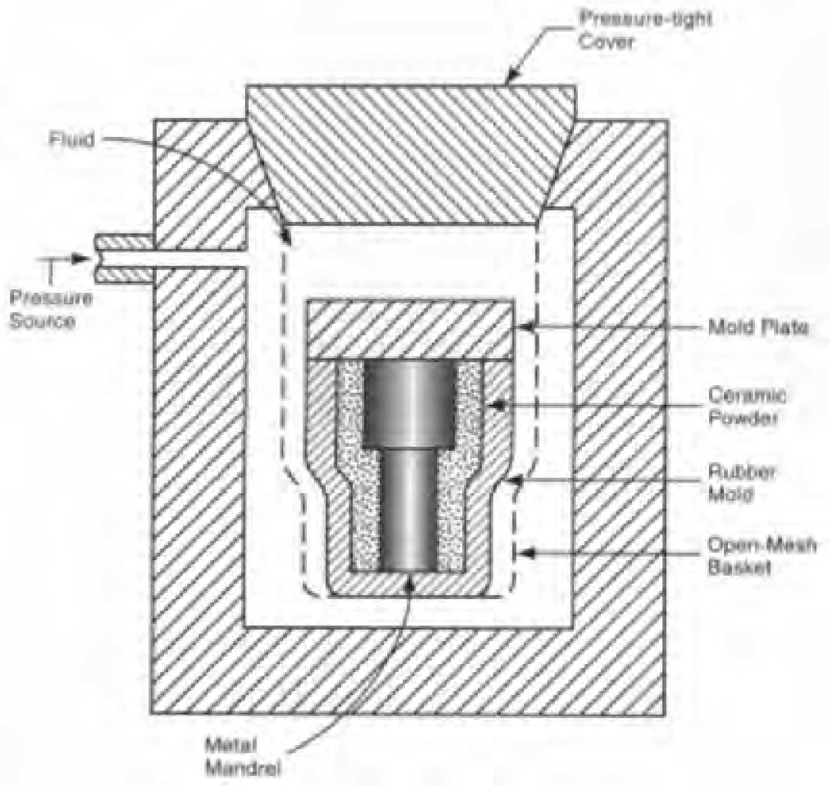

Fig. 5B5a Isostatic press forming.

Tolerances are broader than those for dry-pressed parts. Ceramic gas-turbine blades and thread guides are made using injection molding.

B7. ***extruding*** - is similar to extrusion of plastics as described in 4I1 in that a screw auger drives the material through the extrusion die. It differs in that there is no need to heat the material to plasticize it. Prior to extrusion, the material is prepared for the operation by mixing in enough water to produce a stiff paste. Trapped air or gases may be removed during material preparation, or the ceramics extruder may have a vacuum chamber for this purpose. If the extruded shape is to have a hollow interior, a mandrel of the desired shape is incorporated in the die. After extrusion, the green part is cut to length. Since extruded sections are of a uniform cross section, they are sometimes machined or shaped by other methods prior to firing, to provide the desired external shape. Bricks, clay pipe, thermocouple insulation tubes, and automotive emission catalyst supports, are among products made by extrusion.

B8. ***slip casting of ceramics*** - uses a liquid ceramic material mixture and plaster of Paris molds to cast green parts for later firing. The mixture contains fine particles with deflocculants and dispersants to insure uniform suspension of the ceramic particles. The mold is filled by gravity and the plaster of Paris, through capillary action, absorbs water from the mixture. The part gradually assumes a leathery consistency as the water is absorbed by the mold. After a suitable time, the part can be removed from the mold, handled and finished, prior to drying and firing. Finishing usually involves careful wiping with wet sponges to remove mold flash, and to smooth any areas where needed. If the part is to be hollow, excess material can be poured from the mold after the material in contact with the mold walls has solidified to a desired thickness. This approach is sometimes called drain casting and is used in the production of artware and hollow sanitary ware components. Refractory parts, including ceramic molds for metal casting, are also made with this method. Fig. 5B8 illustrates drain casting.

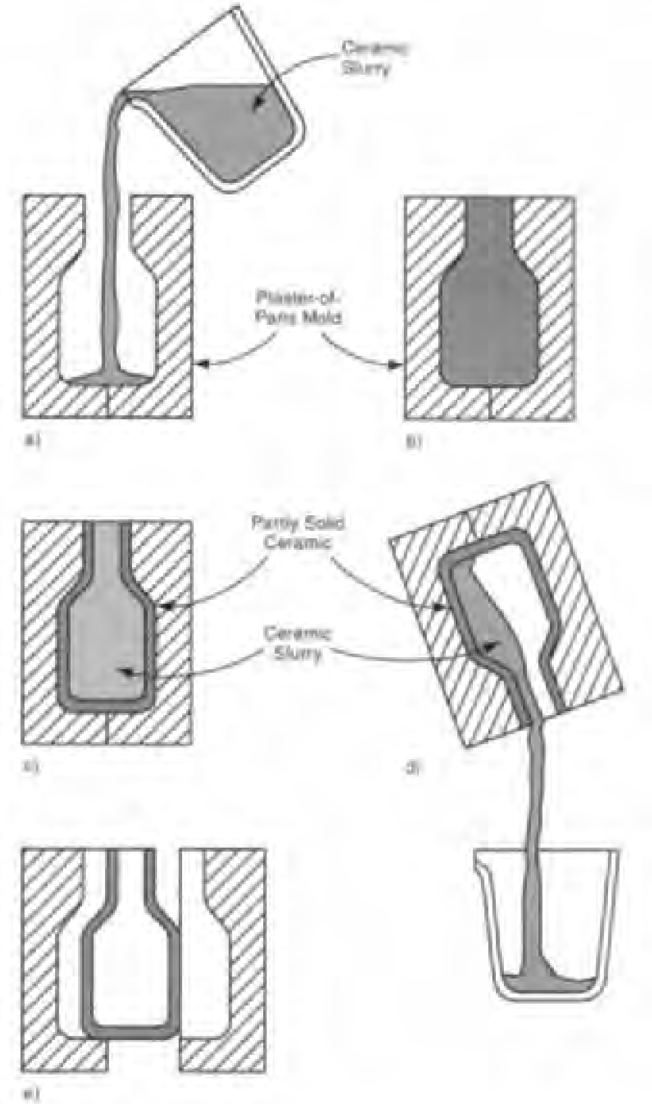

Fig. 5B8 Drain casting. a) Ceramic slurry is poured into a plaster-of-Paris mold. b) The mold starts to absorb moisture from the slurry by capillary attraction. c) The dryer ceramic material on the mold walls forms semi-solid walls of the ceramic workpiece. d) Excess slurry is poured from the mold, leaving a semi-solid workpiece in the mold. e) The mold is opened and the workpiece is removed for trimming, if needed, and further drying and firing.

B8a. ***pressure casting*** - applies pressure to the slip in the slip casting process to partly or completely replace the capillary action of the porous mold. This procedure enables the casting operation to proceed more quickly. More importantly, it results in a better part. Dewatering of the cast material is greater. There is less post-casting shrinkage, and the dimensions of the finished piece are more accurate. The part has an improved surface finish and greater strength. The process also allows some materials that are less suitable for slip casting to be processed. Pressures up to about 580 lbf/in^2 (4 MPa) are used. Molds are made from porous plastic polyelectrolytes, which can withstand the pressures involved.

B9. ***jiggering*** - is an advancement of the manual process used to form bowl-shaped or other hollow workpieces on a potter's wheel. In the current process, a heavy plaster of Paris mold is set up to rotate on its axis. A glob of paste material in placed in the mold, which is of the shape needed to form the outside surface of the part to be produced. Centrifugal force causes the material to flow to the mold walls. The process is aided by a tool, a jigger shoe, that descends either automatically or manually into the mold and shapes the inside surface of the desired part. The process, therefore, differs from slip casting since the wall thickness is controlled by the mold and jigger shoe and the inner surface of the ceramic part takes a more controlled shape. Fig. 5B9 shows the cross section of a porcelain fitting, and the mold and jigger shoe used to produce it by jiggering. Dinner plates are often made with this method. Sometimes, several parts, made by jiggering, are assembled together before drying and firing to produce a more complex part.

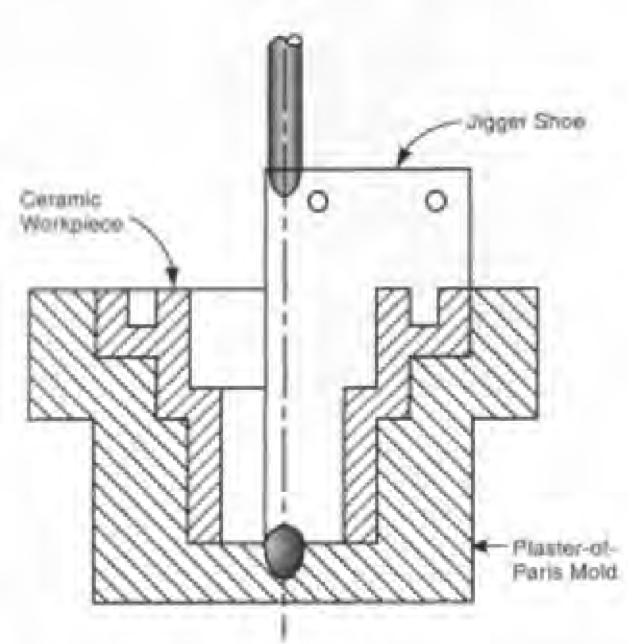

Fig. 5B9 Jiggering. The jigger shoe is rotated about the central axis to form the internal shape of the workpiece.

B10. ***roll compaction*** - uses a slurry of fine ground powders, fluxing agents, organic binders, and plasticizers. The slurry is sprayed onto a flat surface, and is partially dried into a putty-like material in sheet form. The sheet is fed into a pair of large parallel rollers that compact the sheet to a uniform thickness. The sheet is then still flexible enough that it can be reeled. In subsequent operations, the sheet is dried, blanked, and punched to the shape desired and then fired. Roll compaction, like tape casting, described below, is used for making small components for the electronics industry such as substrates for integrated circuits.

B11. ***tape casting*** - is another sheet production method. Slurry, made with an easily-evaporated organic liquid, is dispensed onto a moving plastic belt. The belt carries the ceramic material under a doctor blade in a position parallel to the belt surface. Excess material is held back by the blade while the belt carries the other material in a sheet of uniform thickness. The sheet is heated to remove part of the organic liquid and a carrier plastic sheet is applied. The sheet is then taken up on a reel with for later processing. Further drying, blanking, and punching to the shape desired, and firing then take place. The process is used to make ceramic substrates for integrated electronic circuits. Fig. 5B11 shows the operation.

B12. ***throwing*** - is a manual method for forming ceramic parts with circular cross sections. A glob or blank of ceramic material in paste form is placed on a revolving table or disk, called a potter's wheel. While it is turning, the glob is shaped with the hands and a variety of hand tools. The process is used for art work, craft items, and limited quantity production. For precision parts, shaping may be only to a rough shape, followed by machining, before firing, to provide more accurate surfaces and dimensions.

B13. ***drying*** - Several methods are available to remove moisture and other additives from ceramic workpieces before they are sintered. Room-temperature drying is

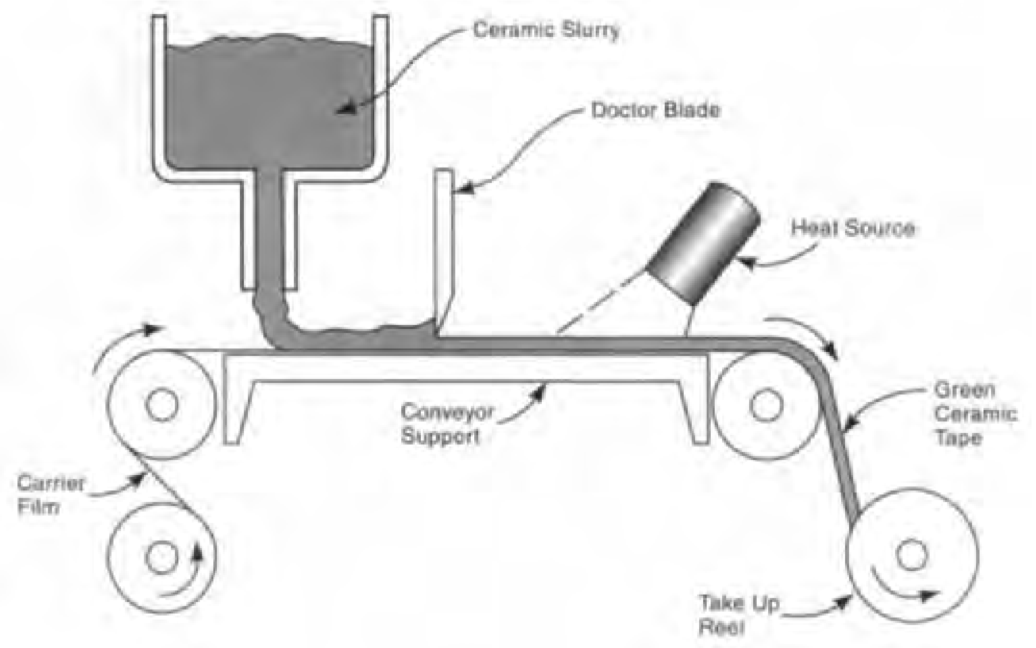

Fig. 5B11 Ceramic tape casting.

the simplest. After forming, some free water may be removed from workpieces that have been made with wet forming methods, by allowing them to stand for a period at room temperature. For further drying, workpieces may be allowed to dry for several days in a drying room or chamber. These facilities are kept at a high humidity or the workpieces are wrapped with plastic film so that the drying is gradual and even.

Under more elaborate production conditions, the workpieces are subjected to a drying operation under conditions of controlled heat and humidity. The ideal cycle in a batch drying chamber starts with high-humidity, cool air being blown onto the workpieces and ends with high-temperature, dry air after a gradual change over a period of time. High velocity of airflow is needed throughout the cycle. Various methods may be used to provide heat to facilitate the operation while still controlling the moisture removal rate. 180 to 210°F (80 to 100°C) is a typical temperature range for such a device when used to dry clay-based ceramics.

If the drying is a continuous operation, a drying tunnel is used and the workpieces proceed through it on a conveyor or on a series of material-handling buggies. The starting high temperature air enters the tunnel at the exit end. As the air flows toward the entrance end, it gradually gets more moist and cooler, so the first air blast hitting the entering workpieces is cool and moist and the air blast at the end is warm and dry.

Drying must be carried out in a controlled manner to avoid cracking, distortion, or excess internal stresses. The control is needed because ceramics shrink when moisture is removed and, at a certain point, are brittle enough for differential shrinkage to cause cracking. Drying is most important for workpieces formed with one of the wet forming methods such as casting, extruding, injection molding, and wet pressing. Drying helps remove organic binders and plasticizers as well as moisture from the workpiece. The degree of drying depends on the accuracy required in the final dimensions and what subsequent forming or shaping operations, if any, are required. Controlled drying is sometimes the first stage of the firing process.

B13a. ***partial in-process drying*** - In some cases, drying of wet-formed ceramic parts is performed in two stages. The first is a preliminary partial drying which puts the workpieces in the green state so that they can be handled and trimmed, or otherwise processed, before the final drying. Workpieces requiring trimming are often partially dried before the trimming operation.

B13b. ***final drying*** - Organic materials as well as moisture, must be removed prior to sintering. Otherwise, gases formed in the workpiece from the decomposition of organic materials or from steam may cause voids or other problems with the workpieces. Final drying, whether a separate operation or the first stage of sintering, is intended to remove these materials completely.

B13c. ***microwave drying (also called dielectric or radio frequency drying)*** - is used in production shops to speed the drying process. The process is similar to heating and cooking food in a microwave oven in that radio-frequency energy provides the heat that dries the workpieces. The process is much quicker than other drying methods because heat is generated within the workpiece and does not have to penetrate from the surface as it would if radiant, convection, or conduction heat sources were used. Greater heat is generated in those portions of the workpiece that are wettest. Hence uniformity of drying is promoted. Because the operation is faster than other methods, it minimizes the quantity of work in process in the drying cycle. Both batch and through-feed ovens are available.

B14. ***machining and grinding*** - Forming methods may not always produce the final shape wanted in ceramic parts, and the precision required in some dimensions may not be achievable from the forming operation. Machining of ceramics is possible and may be required in order to bring the workpiece to the shape and dimensions needed. Machining can involve turning, milling drilling, boring, threading, tapping, and other operations described in Chapter 3. These operations are normally carried out before the part is sintered, when it is in the "leather-hard" condition, after drying.

Carbide cutting tools are used because of the abrasive nature of the ceramic material. Such machining is made difficult by the weak and fragile nature of unsintered ceramics. There are also dimensional changes from firing which may make it difficult to achieve close dimensions of machined surfaces after sintering. If dimensional adjustments are needed after sintering, they may be effected by grinding or lapping with diamond abrasives. Drilling and cutting with diamond-tipped drills and saws is sometimes employed. Ultrasonic machining, laser- and electron-beam machining, and chemical machining, are alternative processes. Some ceramic materials have been developed to provide less difficult machining conditions, when machining of sintered material is necessary.

B15. ***glazing*** - Glazing material can be added to the workpiece before firing to provide a smooth, glossy surface. It is sometimes applied after firing and, if so, there is a second, lower-temperature firing. Glazing coatings are made up of glassy material or partially crystalline material in slurry form. Clay or organic binders may be added to the mixture to improve its adhesion to vertical workpiece surfaces.

B16. ***sintering (firing)*** - In sintering, the dried ceramic workpiece is heated to a high temperature for a specified period. Typical temperatures are around the 2500 to 3000°F (1400 to 1650°C) range. Some ceramic materials may require a temperature over 3600°F (2000°C) Alumina without glass materials included in the mixture, is fused at 3500°F (1930°C)[6].

There are two prime sintering mechanisms: solid state diffusion, when particles fuse together without melting (as with the pure alumina) and liquid-phase sintering. When glasses are included in the mixture, liquid-phase sintering takes place. The glasses melt and fuse the particles together at a lower temperature. Some surface melting of other particles in the material may also occur, providing a bond between the particles. Also, chemical reactions at the elevated temperature may create liquids that provide liquid-phase sintering. When glasses are not incorporated in the materials, diffusion is the usual means of sintering .

When sintering is completed with either mechanism, the particles fuse into a hard, strong, homogeneous, and dense state. Both heating and cooling phases take place very slowly and, though the actual sintering does not require an extended period, the total sintering process can require several days or longer. Careful control of temperature and temperature changes over time is important to insure proper sintering and to prevent adverse effects on the workpiece during the process.

As the material is slowly heated, several changes take place: The first is drying, if the workpiece is not already dried. Then, if the material contains water of crystallization, that is driven off at

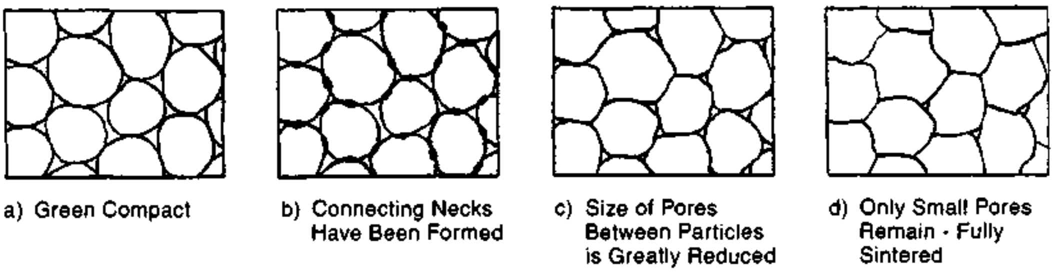

Fig. 5B16 The sintering process for ceramics. The shrinkage of the workpiece during sintering is due to the elimination of most of the pores between particles.

temperatures of 660 to 1100°F (350 to 600°C). The sintering is initiated by several different reactions or physical changes. Typical sintering action on the material grains is shown in Fig. 5B16. Considerable shrinkage may take place during sintering as material moves to fill the open spaces between grains.

B17. ***hot pressing*** - is used to make cutting tool inserts and other ceramic parts of simple shape. Dry, fine, ceramic powder or a powder preform is placed in a graphite die supported by ceramic parts. Pressure is applied at the same time that the ceramic workpiece is heated to the sintering temperature. However, the temperature is lower than that required for regular sintering because the combination of pressure and temperature aids in bonding the particles. The diagram in Fig. 5B17 shows a typical tooling arrangement. The shapes of parts that can be processed in this way are limited, but the parts, after pressing, are finished or nearly so. The process is used with some materials that cannot be densified by sintering without pressure. The process is costly. Microcrystalline ceramics with high strength properties can be produced, and the parts made are used in higher technology, structural applications.

B17a. ***hot isostatic pressing (HIP)*** - involves isostatic compaction of powders (and other materials) at an elevated temperature. A water-cooled pressure vessel with an internal high-temperature furnace is employed. Pressures reach about 45,000 lbf/in^2 (310 MPa) and temperatures about 3600°F (2000°C). Argon, nitrogen, or helium gas is pressurized and acts against the surfaces of the workpiece through a hermetically sealed glass or metal encapsulation. Because of the high temperatures involved, sheet metal, if used for encapsulation, must be refractory. Glass envelopes soften at the temperatures involved but still transmit the pressure to the ceramic material. Pressure and temperature are closely controlled. Electrical resistance heating is usually used. The method is advantageous for producing more complex shapes of parts than by regular hot pressing. Improved, more-uniform compaction for critical parts is an

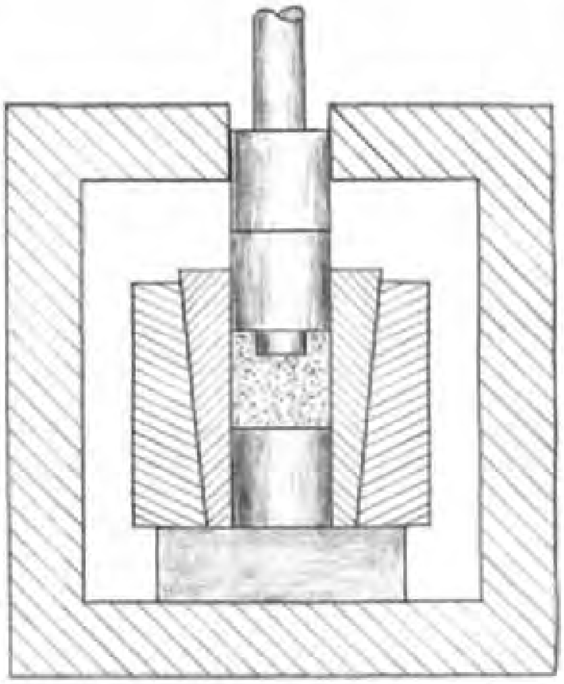

Fig. 5B17 Hot pressing of a part from ceramic powder.

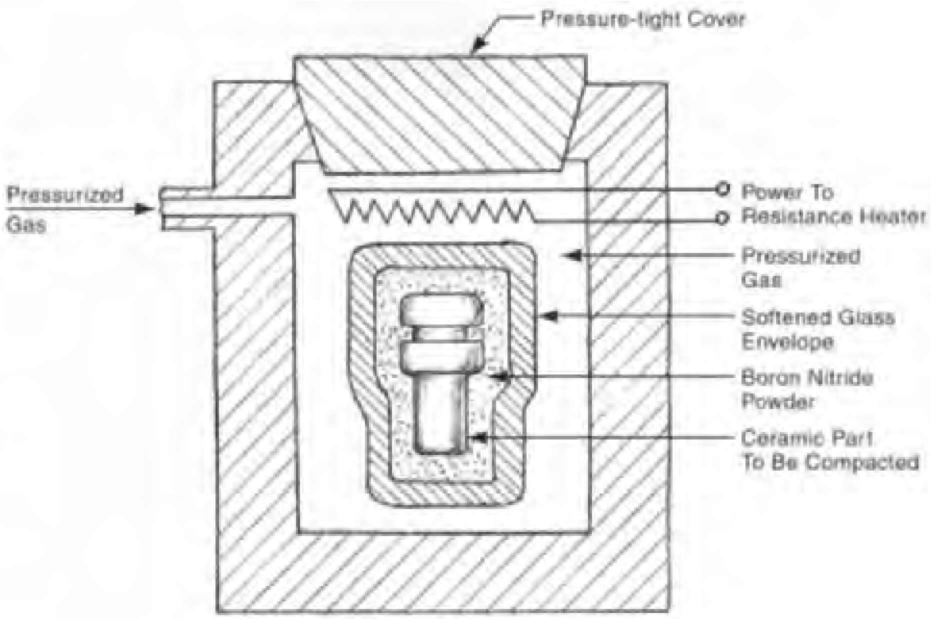

Fig. 5B17a Hot isostatic pressing.

important advantage. The process is applicable to powder metals and cermets as well as ceramic powders and is used to remove voids in castings for critical parts such as turbine blades, to compact powder metal parts to almost 100 percent density of the metal involved and to bond dissimilar materials together. Fig. 5B17a shows the process schematically.

References

1. *Encyclopedia of Physical Science and Technology, Vol. 6*, R.A. Meyers, ed., Academic Press, London, 1987.
2. *Schott Guide to Glass, second edition*, H.G. Pfaender, Chapman and Hall, London, 1996.
3. *The Handbook of Glass Manufacture, 3rd ed.*, F.V. Tooley, Ashlee Publishing, New York, 1984.
4. *Glass Engineering Handbook, 2nd ed.*, E.B. Shand, McGraw-Hill, New York, 1958.
5. *The McGraw-Hill Encyclopedia of Science and Technology, vol. 9*, McGraw-Hill, New York, 2002.
6. *Handbook of Ceramics, Glasses and Diamonds*, Charles A. Harper, ed., McGraw-Hill, New York, 2001.
7. *Modern Ceramic Engineering*, D.W. Richerson, Marcel Dekker, New York, 1982.

Chapter 6 - Woodworking Processes

A. Lumber Making, Including Saw Mill Operations

Logs are delivered to the saw mill and are sorted and stored according to species, length, diameter, and expected end use. Handling at the saw mill is by cranes, heavy lift-trucks, or derricks. Bark is removed and the logs are sliced into slabs, which become boards when their edges are trimmed and their ends are cut square. The boards are seasoned (dried) and given a smooth surface.

A1. ***debarking*** - is carried out by several different methods. One common approach utilizes self-tumbling of the logs in a revolving drum. The tumbling action of the logs against one another breaks the bark free from the logs. Other methods are the Cambio ring or Rosser head debarkers that chip the bark away using blunt knives or metal teeth mounted on a rotating ring or wheel. Other debarking machines have two or three debarking tools that rotate against the log as it is fed axially through the machine. Another method uses chain flails as the logs rotate and move through the debarking chamber. High pressure water is used in some sawmills, particularly when logs are irregular.

The Rosser head debarker rotates each log while a rotating tool, similar in appearance to a gear or wide circular saw (but not sharp enough to cut the wood significantly) bears against the log surface with hydro-pneumatic pressure. This debarking tool breaks the bark free as the log and the tool rotate. The log is fed axially so that the tool passes over the whole surface of the log. In modern sawmills, the operation is highly automatic but one operator oversees the operation and controls the conveyor that moves logs to and from the machine. Fig. 6A1 illustrates this machine in operation.

The purpose of debarking is to remove stones, grit, or other foreign objects that dull cutting saws, and to eliminate the bark from pieces that will be made into particle board and similar products. Another advantage of removing bark is that bark-free logs can be evaluated better for cutting into boards. Logs are fed from a feed chute and discharged after debarking to a conveyor that moves them to the next

Fig. 6A1 A Rosser head debarking machine in operation. *(Courtesy Connerstone Forest Products, Kingsley PA.)*

operation. Sometimes, logs are washed after debarking to remove any remaining sand, dirt, or other foreign material. The bark removed from the logs is utilized as landscaping mulch.

A2. ***headsaw operation (breakdown sawing)*** - is the first saw cutting of the log. In well-equipped saw mills, this is a semi-automatic operation, performed on a headsaw and controlled remotely by a skilled operator who is assisted by a computer. With computer assistance, the operator determines how each log will be cut. The particular pattern of the cut depends on the condition and size of the log and the need for boards with particular widths, thicknesses, and grain patterns. The headsaw includes a long moving carriage that holds the log and conveys it axially through the cutting blade and back past the blade for additional cuts.

Cutting is commonly done with a bandsaw blade in the larger production mills. (Some saw mills use a large circular blade or, for large logs, two circular saws, one above the other, arranged so that both cut in the same plane. Bandsaw blades are less costly than circular saws and have a narrower kerf which wastes less material as sawdust.) Sensors feed data on the log's shape to the computer. The computer calculates an optimum first cut to provide a flat surface on the log with a minimum amount of material loss. A red light, projecting a line on the log, shows the operator the location of the cut. The operator may overrule the cut suggested by the computer. Fig. 6A2 illustrates a present-day headsaw in operation.

Fig. 6A2 A head saw performing a squaring operation on a log. (*Courtesy Connerstone Forest Products, Kingsley PA.*)

There are three basic types of saw cuts, each of which produces a distinctive grain pattern. They are illustrated in Fig. 6A2-1. *Plain sawing* is the simplest, quickest and most common cutting method. All cuts are tangent to a growth ring of the tree and are parallel to one another. This system has the highest yield of boards per log, and provides boards that are easiest to kiln dry, but the boards are more susceptible to warping. The growth ring lines in the boards extend wide and have a V-pattern^2. See view (a) of Fig. 6A2-1. *Quarter sawing* produces boards with mostly straight grain lines, fewer splits and checks and less warpage after drying than plain-sawn boards. However, these boards are usually narrower than with plain sawing and the yield of boards per logs is less. See view (b) of Fig. 6A2-1. *Rift sawing*, shown in view (c) of Fig. 6A2-1 is similar to quarter sawing and has a distinctive grain pattern.

If plain sawing is to take place, the log is squared. The slab produced by the first cut is conveyed away, and the log, which now has a flat surface along one side, is returned to the starting position. (A slab is a board with one flat surface and one curved surface from the near-cylindrical

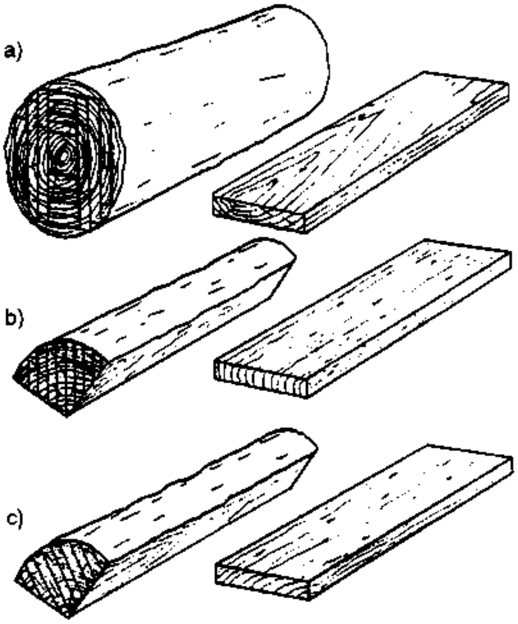

Fig. 6A2-1 Different approaches in the cutting of logs into boards yield differences in grain appearance and properties of the board: a) plain sawing, b) quarter sawing, c) rift sawing.

surface of the log.) The log is rotated a quarter of a turn about its axis and is moved to the saw blade for another cut. This action is repeated so that, after four cuts, the log is square or rectangular in cross section. The square is not so small that all surfaces are flat for their full width, because to do so would waste too much of the wood in the tree trunk. In most mills, the cant (squared log) is conveyed to a secondary saw for cutting into boards.

If the log is to be cut by quarter sawing or rift sawing, it is cut into quarters with one cut through the center of the log. Center cuts are then made to separate the two halves into quarters.

A3. ***plain sawing of boards*** - (view a of Fig. 6A2-1) may be done at the headsaw or on a secondary saw. In plain sawing, the cant (squared log) remains on the cutting table of the headsaw. The table is shifted sideways one board thickness and the table again traverses into and across the saw blade, cutting one board from the cant. This operation is repeated, perhaps after the cant is rotated about its axis to present a better face for cutting the next board. After each board is cut, it drops on a conveyor and is moved to the next operation. After a number of boards have been cut, the cutting reaches the area near the center of the log, which is apt to have more knots and other defects which yield boards of lower quality. This center portion of the log may be cut into lower-grade boards for use in pallets or crating, or use as timber for railroad ties[5].

Many sawmills limit the headsaw to preliminary cuts and do the cutting of cants or log quarters into boards on a secondary cutting saw. Such saws are similar to headsaws in having a carriage that carries the cant or log quarter through a saw blade. Fig. 6A3 shows a secondary saw and cants waiting to be sawed into boards. In high production mills, usually for softwood construction lumber or other large-quantity applications, gang saws with multiple blades that are spaced one board thickness apart may be used to cut two or more boards at a time. In some mills, especially for smaller and lower-grade boards, gang saws are used to cut cants completely in one pass.

A4. ***quarter sawing*** - uses larger logs. They are first sawn into two half-round logs and then into four quarter-round logs as shown in Fig. 6A2-1, view (b). Each quarter is then sawed into boards by making cuts at an angle from about 65 to 90 degrees from the growth rings. These cuts may be made successively with the headsaw or secondary saw or, if production volume is high, they may all be sawn at once with a gang saw.

Fig. 6A3 Cants (squared logs) being cut into boards at a secondary saw. *(Courtesy Connerstone Forest Products, Kingsley PA.)*

A5. ***rift sawing*** - Boards cut by this method are also cut from quarters, but the cutting starts at an angle of about 45 degrees from the growth rings as illustrated in Fig. 6A2-1, view (c). The properties are essentially the same as those of quarter-sawn boards with a slightly different grain appearance.

A6. ***edging*** - Since the edges of many sawn boards show the irregularities of a tree trunk, their edges must be trimmed. *Flitches* (boards with an irregular edge or edges) from the board cutting operation are conveyed automatically to a double band or double circular saw called an *edger*. One blade on each side cuts the edge of the board as it passes through the machine. The amount of cut on each edge is determined by a machine operator; the position of the saws is adjustable. The operator moves the saws to maximize the width of the boards. The cut edges are disposed of as wood scrap or ground into chips and used in the manufacture of oriented strand board, wafer board, or particle board, unless there is some portion that can be trimmed into a shorter narrow board as shown in Fig. 6A6.

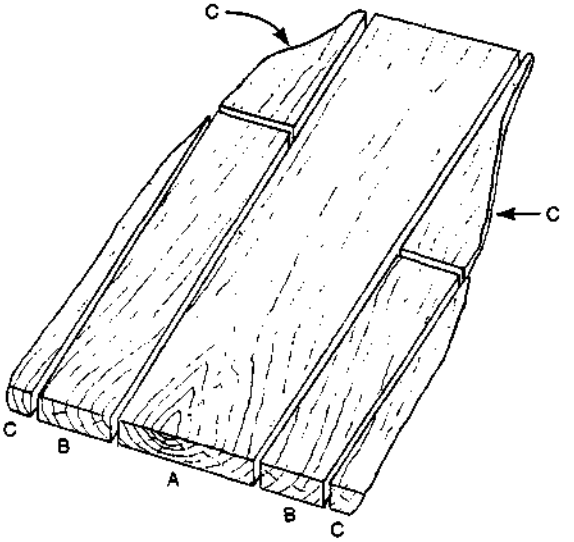

Fig. 6A6 Edge trimming of boards cut from logs. Part A is the maximum size board that could be cut from the flitch. Parts B are shorter and narrower pieces that could also be cut where the log was larger. Parts C are scrap which may be used as material for particle board or other wood-fiber products.

A7. ***trimming (cutting to length)*** - The ends may not be square since they result from the chainsaw cuts made when each log was cut from a tree. The full length of the board may not be usable because of defects in the wood or an irregular edge. Therefore, it is necessary to trim the boards to have square ends. The boards are crosscut to length at a *trimmer* saw by an operator who gets the longest board possible. Multiple-bladed saws may be used. Fig. 6A7 shows a multiple blade trimming saw in operation.

A8. ***inspecting and grading boards*** - After edging and trimming, boards are conveyed to a "green chain" inspection area where they are sorted by size (thickness, length, width), grade (quality, which involves freedom from knots and other defects, nature of the grain, and overall appearance), and species. In some saw mills, sorting is partly performed with mechanical equipment. Grading and inspection standards vary considerably, depending on the expected end use of the boards. Softwood and hardwood standards are considerably different because of their different end uses. Fig. 6A8 illustrates this operation.

Fig. 6A7 The trimming operation with a multiple blade saw. The ends of the boards are trimmed square and defective or unfinished sections are removed at this saw. The operator determines, with computer assistance, for each board, where the cuts are made. (*Courtesy Cornerstone Forest Products, Kingsley, PA.*)

Fig. 6A8 Inspecting and grading green lumber. (*Courtesy Cornerstone Forest Products, Kingsley, PA.*)

A9. ***drying (seasoning)*** - Harvested wood normally has a much higher moisture content than is desirable in wood products. If milled and used when "green" (freshly cut), wood pieces will shrink considerably and often warp, check, crack, or split. A typical desired moisture content for furniture making is 6 to 11 percent by weight, whereas green lumber will have values of 50 percent or higher. Seasoning involves either air or kiln drying of the cut lumber or a combination of both. The operation must be carefully controlled in order to dry each board uniformly throughout its thickness, and to minimize shrinkage stresses that create these defects. Drying ensures better dimensional stability of the wood, better color and strength, and lower transportation costs because of reduced weight.

A9a. ***air drying***[1] - is performed by stacking cut boards out of doors. Ends of the boards may first be coated with wax or paint by brushing, spraying, or dipping, to protect them against fungi or insect attack and to limit too-rapid drying at the ends, which can lead to splitting or checking. The bottom of the stack is elevated above ground about one foot. Each layer of boards is separated from the layer below by spacer sticks 1/2 to 1 in thick but of uniform thickness, spaced 12 to 2 feet apart. (These dimensions depend on the thickness of the boards and the season.) The separations allow free air movement around each board. The spacer sticks are placed so that the boards are kept straight and well supported to minimize warpage. The stack is usually protected from direct rain and sunlight, ideally with an overhanging roof. Drying must be slow so that the outer portions of each board do not dry too much while the inner portions are still wet, otherwise, splitting will occur. Drying times vary with the climate and type of wood. Hardwoods may require 9 or more months; softwoods may be satisfactorily dried in three to six months. Pines and other light woods dry faster. (Drying is faster in the warmer months of the year.) Typical moisture content after air drying is about 20 percent. The target level for construction lumber is 19 percent[2]. Ideally, for cabinet work, hardwood moisture content should be about 8 percent for most areas in United States, but as low as 6 percent in the arid Southwest and up to 11 percent in humid areas.

A9b. ***kiln drying*** - takes place in a large, heated, and well-insulated chamber or building. The operation is much faster than air drying but must be carried out very carefully in several steps to avoid distortion and splitting of the boards. The boards are neatly stacked, similarly to the system used in air drying. The operation may be carried out on a batch or continuous basis where the stacked boards proceed through the length of the kiln on trucks. The heated air in the chamber is controlled for temperature, humidity, and circulation. Large fans are employed. At the start of drying, the air has a higher humidity, achieved by injecting live steam into the system, but only a slightly higher temperature. This arrangement prevents rapid drying of the surface wood, which could cause the boards to crack and split. The humidity is gradually lowered and the temperature raised as the wood dries. Sample boards are checked for moisture content to provide information to aid control of the rate of change in temperature and humidity. The kiln operator also cuts samples to evaluate the amount of stress in the wood. As a last step, some additional humidity is added to prevent the surface of the wood from becoming too dry and "case hardened". A successful kiln operation provides consistent moisture content in both the interiors and surfaces of the boards. Drying to 10 per cent moisture content is normally achieved with hardwoods in 3 to 12 weeks. Often kiln drying takes place after air drying and, in such cases, the kiln cycle time is normally 1 to 4 weeks. After kiln drying, the boards are usually stored in a warm area; otherwise, the moisture content will revert to a normal equilibrium value of 15 to 22 per cent[1]. Wood scrap is commonly used to fuel the kiln. Fig. 6A9b illustrates a typical kiln drying operation.

A9c. ***radio frequency drying*** - In this process, stacks of boards to be dried are placed between two metal plate electrodes. Power·is applied by high-frequency current that induces molecular activity in the wooden boards, generating internal heat. The amount of heat generated depends on the level of moisture in the wood. The operation is usually performed in a vacuum chamber, which reduces the temperature level needed. Lumber and wood components can be dried in much less time than with other techniques and quite evenly with this method. When processing lumber, separation strips between layers of boards are not needed. The approach is also used in plywood production, providing more rapid curing of the adhesives that bond the veneer layers.

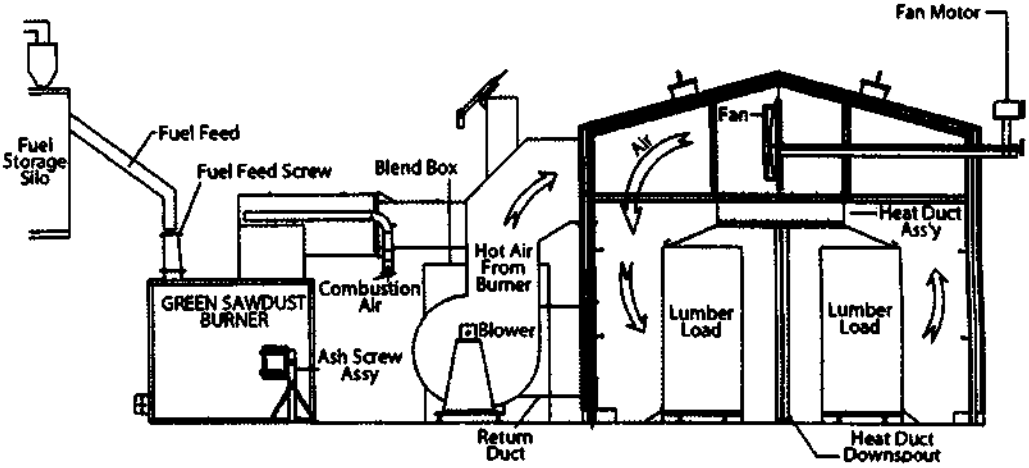

Fig. 6A9b Kiln for removing excess moisture from lumber. This particular kiln was designed for softwood, but hardwood kilns are quite similar. Note the sawdust burner, which provides heat for the operation. (*Drawing courtesy of USNR.*)

B. Making Wooden Components

Fig. 6B shows an assortment of equipment used to machine wooden components for cabinets, furniture, and other wood products.

B1. ***cutting boards to size*** - usually involves a sequence of ripping and cross-cutting operations. However, when CNC routers or laser cutters are used, especially with smaller pieces, and with fiber board or plywood, the operation may be done in one computer-controlled step.

B1a. ***ripping*** - cutting of board to a desired width along the grain, is performed in low-quantity shops as a manual operation, commonly with a table saw set for ripping. The board is fed along a rip fence, which is set parallel to the circular saw blade, a prescribed distance from the blade. For greater quantities, two or more parallel cutters may be used in a gang saw so that boards fed to it are trimmed at the edges and the boards exiting from between the cutters are of the desired width. Higher production ripping is more sophisticated. Fig. 6B1a illustrates a computer-controlled, high production rip saw, part of a system that adds computer-controlled processing to the operation. The five-cutter saw includes a scanning system that inspects each board before it is ripped. From data on the length and width needed, and quality inspection criteria, all entered beforehand, the computer program maximizes the yield from each board. It plans the finished cuts to allow for the removal of defects and even aids in matching ripped boards of similar color if instructed to do so.

B1b. ***cutting to length (crosscutting)*** - cuts a board across the grain to the length desired. The operation may be performed under manual control on a table saw, a radial arm saw, a miter saw (See Fig. 6B.) or a chop saw. A semi-automatic chop saw is illustrated in Fig. 6B1b-1. Fig. 6B1-2 shows a highly automatic machine that reads an inspector's markings to cut out defects, cuts the board to lengths that optimize lumber utilization and marks each cut board to identify it. In high-production situations, when boards have untrimmed ends, they are conveyed against two parallel circular saw blades spaced so as to cut the board to the desired length. Such an operation is shown in Fig. 6B1b-3.

B2. ***surfacing with planers and jointers*** - These operations remove the surface roughness that remains when boards are cut from logs, produce lumber of standard thickness and squareness, and correct for some warpage (at the expense of some loss of thickness).

B2a. ***planing (surfacing)*** - is the operation that smooths and flattens the wide surface of

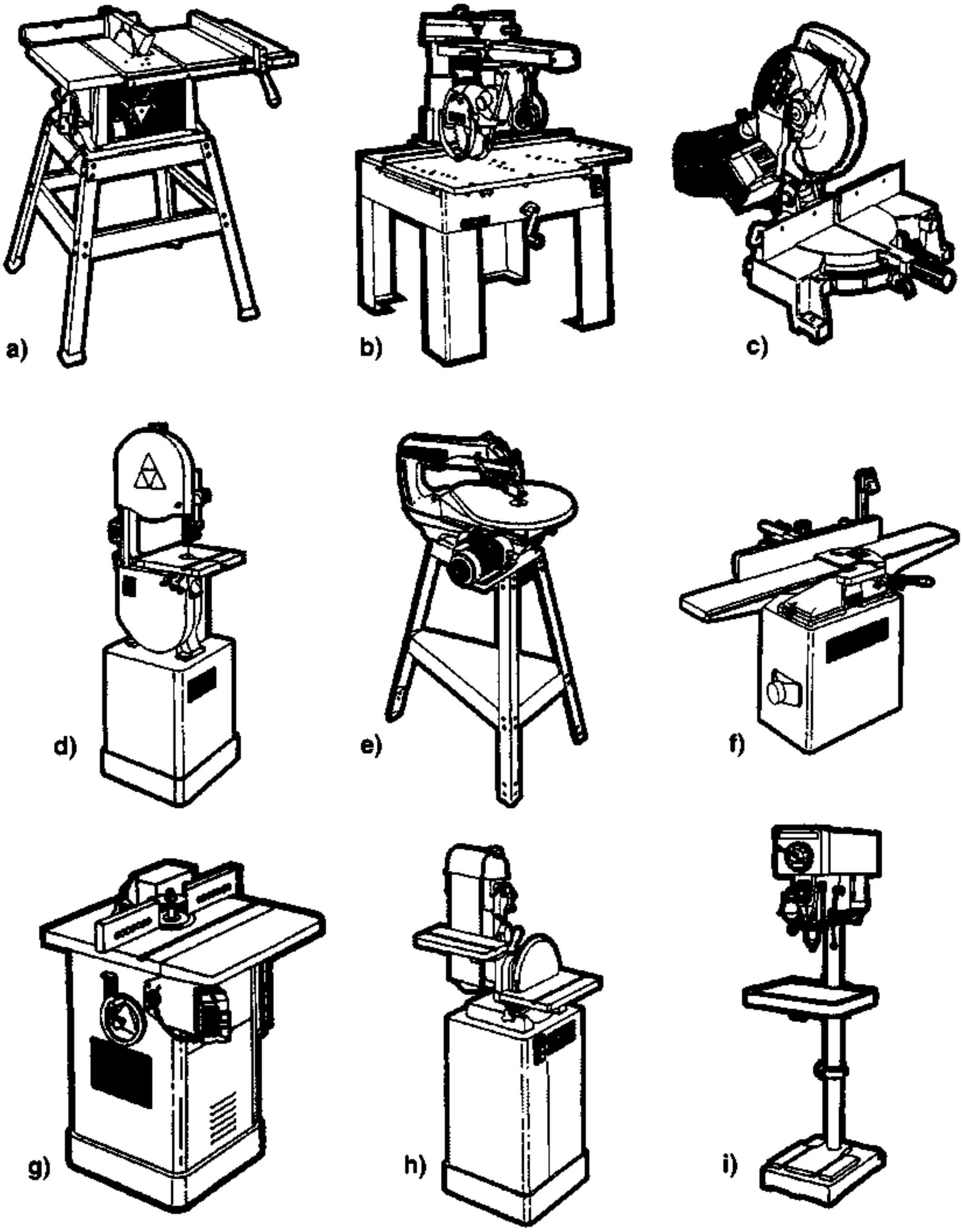

Fig. 6B Common equipment used in machining wooden components: a) table saw, b) radial arm saw, c) miter saw, d) band saw, e) scroll saw, f) jointer, g) shaper, h) combination belt and disc sander, i) drill press. (*Courtesy Delta Machinery.*)

Fig. 6B1a Ripped boards exiting a multi-blade, computer-controlled, rip saw. (Computer functions are described in the text.) (*Courtesy Donald Dean and Sons, Inc., Montrose, PA.*)

Fig. 6B1b-1 A chop saw. The operator keys in the workpiece length wanted in the key pad, and the machine then moves the work stop to the proper position. The circular cutting blade moves against the workpiece from underneath. (*Courtesy Donald Dean and Sons, Inc., Montrose, PA.*)

Fig. 6B1b-2 A computerized cut off saw. The machine reads an inspector's markings on the piece to be cut and cuts out defects. The length to be cut is then chosen by the computer from a number of preset possibilities to maximize the utilization of the lumber. Each piece cut is marked automatically with its length and identification. (*Courtesy Donald Dean and Sons, Inc., Montrose, PA.*)

Fig. 6B1b-3 A dual cut-off saw. The machine cuts both ends of a workpiece to provide a precise length and square, smooth, ends. (*Courtesy Donald Dean and Sons, Inc., Montrose, PA.*)

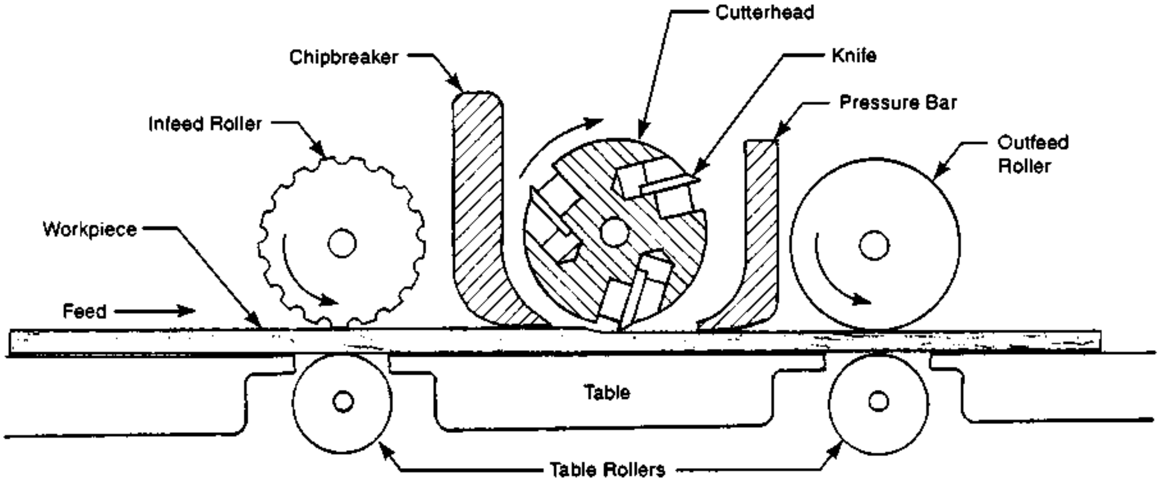

Fig. 6B2a Drawing showing the planing operation that leaves a smooth surface on a board and machines it to a prescribed thickness.

boards. A wide, multi-tooth cutter removes material across the surface of the board, eliminating the surface roughness and producing a board of standard thickness. Fig. 6B2a illustrates the principle of planer operation. Boards are fed into one end of the planer and are thereafter mechanically pulled through by the machine and discharged at the other end. Devices in the planer hold the board securely against the machine table at the point of cutting. Cutting heads of planers are as wide as 48 in (1.2 m). The depth of cut is normally 1/16 in (1.6 mm) or less. Boards as thin as 3/8 in (10 mm) can be planed as is and thinner boards can be processed if attached to a backing board. Fig. 6B2a-1 shows a simple portable planer used for craft work and Fig. 6B2a-2 shows a high-production planer system.

B2b. ***jointing*** - A jointer is a machine similar to a planer, but is more versatile. It can make smoothing and squaring cuts on the edges and ends of boards as well as the wide surface. It is normally manually operated. The board is guided through the machine manually, in contrast to the planer which moves the board automatically. The jointer has a narrower cutting head than a planer, normally 4 to 12 in (0.1 to 0.3 m). The cutter head is below the table, which is divided at the cutter into two sections, the infeed table and the outfeed table. The outfeed table is slightly higher than the infeed table because of the depth of the cut. A fence provides side guidance and support for the workpiece. Work is fed into the jointer by sliding it along the infeed table and against the fence. Jointing is illustrated schematically in Fig. 6B2b, and Fig. 6B(f) shows a jointer. The fence is usually set at a 90-degree vertical position so that jointed edges or ends are square to the board's surface, but it can be tilted for angle cuts. Jointers, like planers, normally remove 1/16 in (1.6 mm) or less

Fig. 6B2a-1 A planer used for craft work. (*Courtesy DeWalt.*)

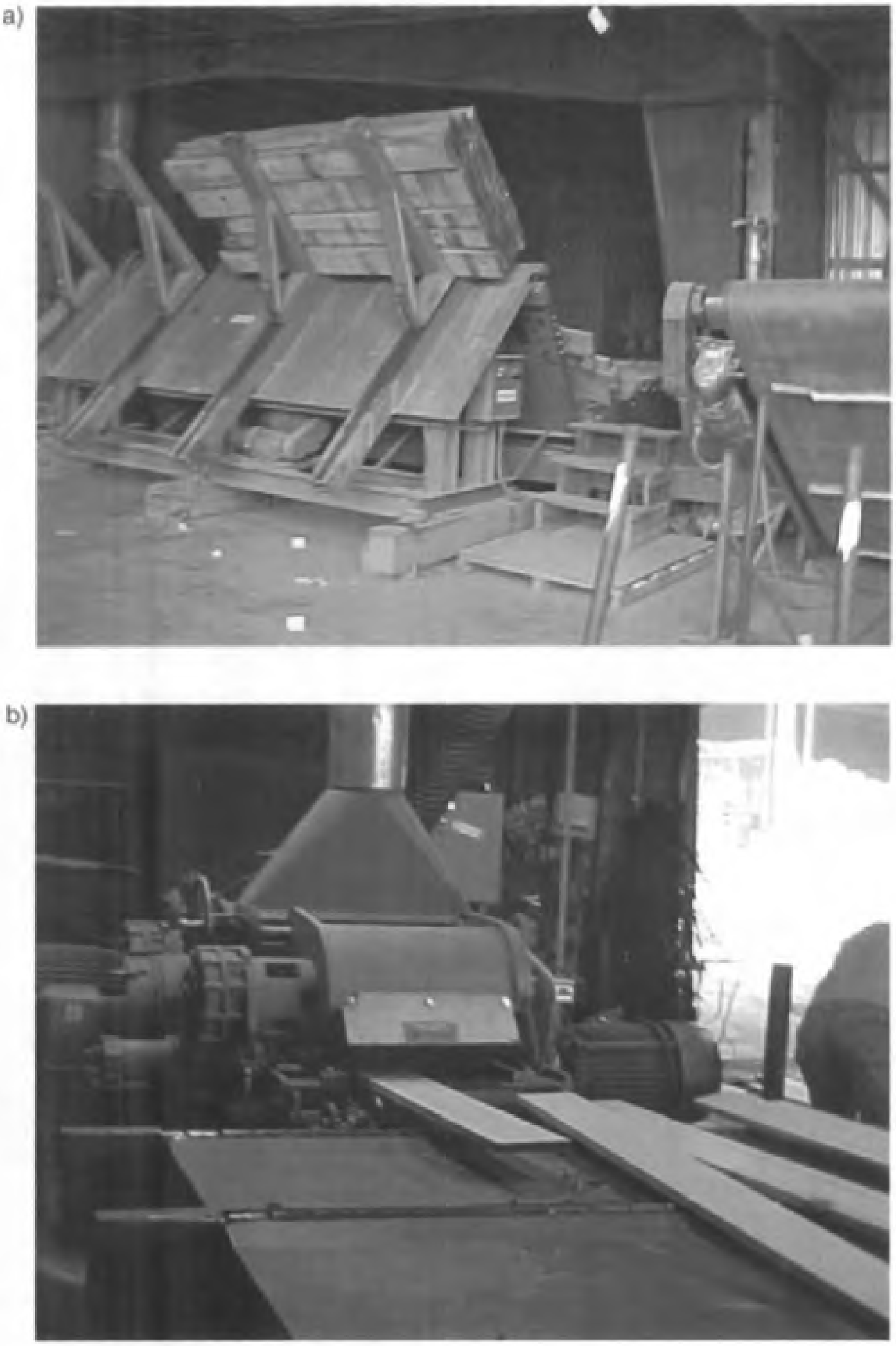

Fig. 6B2a-2 A high production planer processing boards coming from the drying kiln: a) Feeding mechanism. b) Planed boards exit this end of the machine. (*Courtesy Donald Dean and Sons, Inc., Montrose PA.*)

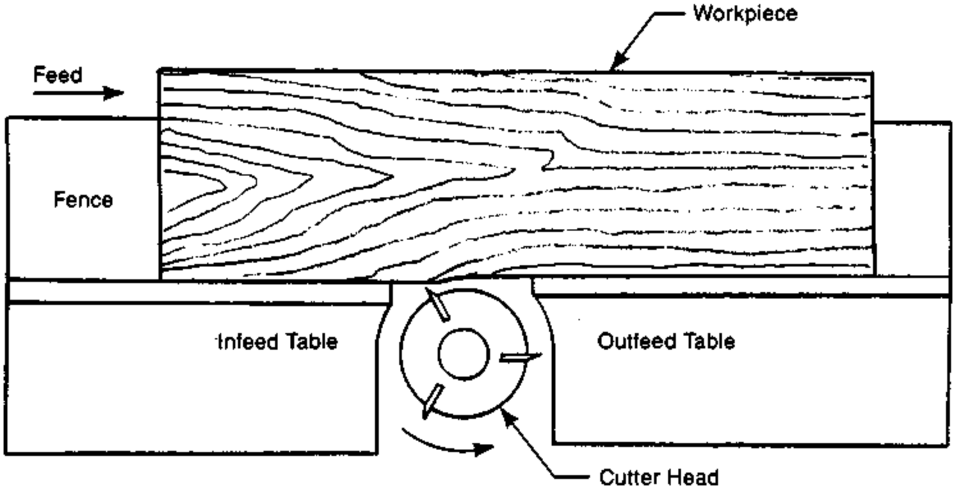

Fig. 6B2b Jointing puts a smooth edge on a workpiece. The operation is commonly manually controlled.

but, when a board end is jointed, the depth of cut is usually 1/32 in (0.8 mm) or less. Jointers are better for removing warp such as bow, twist, or cup, in a board, because the planer's feed mechanism presses the board flat for cutting, after which it can spring back to its warped condition, while the jointer can be fed without pressing the board and can more easily remove the high areas from a warped surface.

B3. ***contour (curved line) sawing*** - is traditionally performed on a band saw or scroll saw. Both machines have narrow blades. The workpiece is moved manually so that the blade follows a curved line traced on the workpiece. A typical woodworking band saw, which uses a continuous thin steel blade in the form of a loop that passes over two wheels, is shown in Fig. 6B(d). A scroll saw, as shown in Fig. 6B(e) and, in operation in Fig. 6B3, uses a very narrow reciprocating blade. Band sawing is further discussed in sections 3G2 and 3G3. Other methods of cutting curved lines involve routers, which follow a template or computer program, or laser cutters, which are also computer controlled. Machines of these types are particularly well adapted to cutting out grid and filigree parts. With both band and scroll saws, the narrower the blade, the sharper the curves that can be cut. Scroll saws are used for intricate, decorative cuts; band saws, with wider blades, for more gentle contours. Although intended primarily for contour cutting, the band saw can be used for ripping and cutoff operations. Both band and scroll saws can make bevel cuts if the worktable is tilted.

AU: Please update figure 6B3.

Fig. 6B3 A scroll saw is used for intricate decorative and other curved cuts in thin stock. (*Courtesy DeWalt.*)

B4. ***turning*** - is the operation used for making parts with round cross sections, and is performed on a lathe. Woodworking lathes are available for both high-production applications and for use in small cabinet shops

Fig. 6B4 A lathe for manually-controlled turning operations. *(Courtesy Delta Machinery.)*

and home workshops. As the workpiece rotates, held and driven by the machine's spindle, cutting tools make contact with the surface and remove material to leave a round cross-section. Furniture legs, baseball bats, lamps, bowls, round tables, and other round wooden objects are made on lathes.

Production lathes may be controlled with servo mechanisms, which guide the cutter to follow a template, but current state of the art utilizes computer control to guide the cutter along whatever path is needed to produce the desired shape of part. In manual lathes, the operator may follow a template with a hand-held cutting or shaping tool, or may operate completely free hand to produce an original shape. Fig. 6B4 illustrates a woodworking lathe used for manually controlled turning.

B5. ***drilling and boring*** - In principle and in basic method, making round holes in wood components involves the same methods as described in section 3B (Machining-Drilling and Boring). Wooden workpieces can be drilled or bored with metalworking equipment. In practice, however, the easier cutting of wooden components compared to metal, and the lower precision normally needed, makes the methods somewhat different, particularly with respect to the type of cutting tools used. Fig. 6B5 illustrates a number of cutting tools used to produce holes in wooden components. The ease of drilling wood enables hand electric drills and even manually-powered drills to be used in low-quantity craft woodworking.

Fig. 6B5 Various wood drills: a) a carbide-tipped Brad point drill, b) spade drill, c) Forstner or power bit, d) hole saws. *(Note: Views a), c) and d) copyright WMH Tool Group, Inc. All rights reserved.)*

B6. ***routers and shapers*** - are machines for cutting shaped edges on wooden components. Usually the shaped edge is for decoration but it may also be part of the means used to join two pieces. One common use of shapers is to cut moldings in strip material. Another purpose is to engrave designs into surfaces. Fig. 6B6 illustrates a number of edge forms and the cutters that make them. The machines used to make these cuts are spindle shapers and routers. The terms are somewhat interchangeable but, usually, shapers are stationary machines with vertical spindles, normally driven from below a horizontal table. The workpiece is moved against the cutter. Machines or powered hand tools in which the cutter is above the workpiece, with the workpiece fixed and the cutter movable, are most commonly referred to as routers. Both types of machines have high speed spindles (4000 to 10,000 rpm) to drive the cutters.

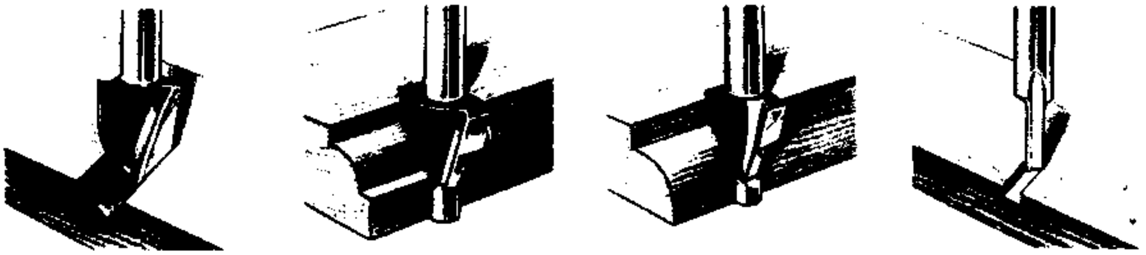

V-grooving bit

Beading-bit (two flutes)

Rounding-over bits (two flutes)

Straight bit (single flute)

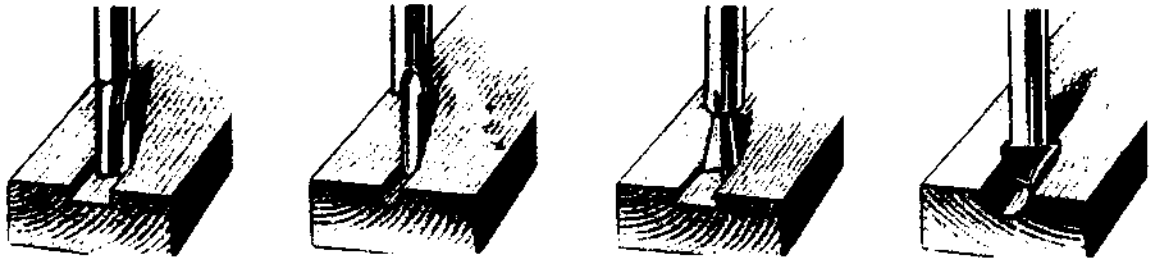

Straight-bits (two flutes)

Veining-bit (single flute)

Dovetail-bits

Core-box bits (two flutes)

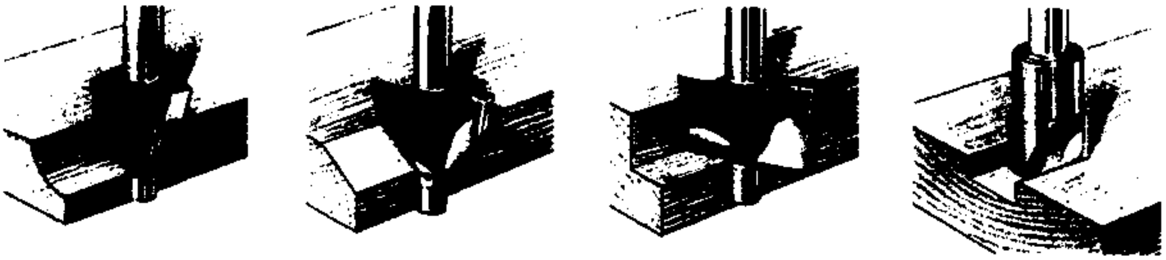

Cove-bit (two flutes)

Chamfering-bit (two flutes)

Rabbetting-bit (one length)

Hinge-mortising and gaining bit

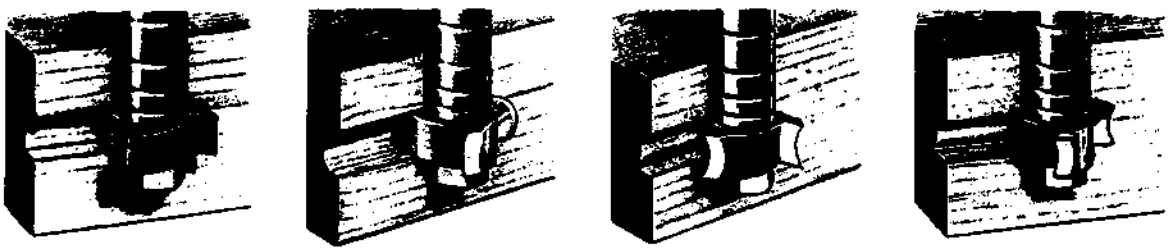

Straight-face cutters

Concave cutter

Convex cutter

Corner bead-cutter

Fig. 6B6 Various router and shaper form cutters and the edge shapes they produce. (*Courtesy Black and Decker.*)

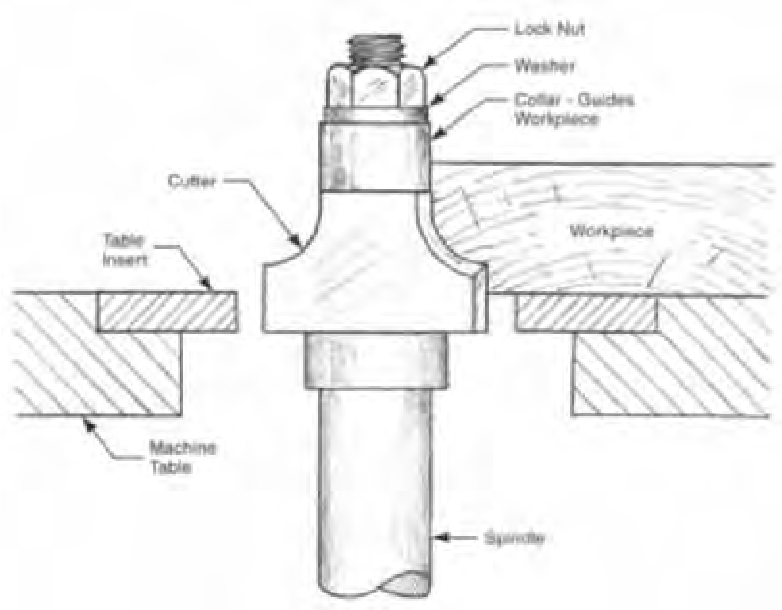

Fig. 6B6-1 A typical router cutter with a collar to guide the cutter along the edge of the workpiece. The collar may alternatively bear against a template instead of the workpiece.

Fig. 6B6-2 The workpiece left on the machine table illustrates one cut made with this computer-controlled shaper. Any one of three cutters on the spindle can be selected and set at the desired height to rout the edge or engrave a design in the workpiece. The path of the tool can be straight or contoured as the sample piece indicates. The operator loads and unloads the machine, but the operation is otherwise automat-ic.*(Courtesy Donald Dean and Sons, Inc., Montrose PA.)*

The high speed of the cutters permits smooth surfaces to be produced with little sanding[2].

When edges are to be shaped, the tool is provided with a non-cutting collar, that guides the cutter by bearing against the edge of the workpiece. It prevents the cutter from cutting too deeply and changing the outline of the workpiece. Fig. 6B6-1 illustrates how the collar is placed on a typical cutter in a shaper. For straight-line or circular edges, fences on the machine can be used to guide the cutter. Raising or lowering the cutter may change the form that is machined. Sometimes several passes are made with different cutters or with the same cutter in different positions, to produce intricate or special edge forms. Sometimes a template, a separate-piece pattern, is used to guide the shaper. When a template is used, the edge of the workpiece does not have to be finished smooth or to the final dimension before shaping. The template guides the shaper to machine the part to the finished size and shape. More recently-developed equipment uses computer control to guide router cutters in straight or contoured paths. It also controls the height of the router cutter and thereby the shape of the edge it produces. Fig. 6B6-2 illustrates such a machine, designed specifically for cabinet doors.

Another machine that is used for engraving and for edge cutting is called the *overarm router*. This machine has the cutter spindle mounted vertically above the table. A pin protrudes slightly from below the table surface, and in alignment with the cutter spindle and, when used, engages a groove in the workpiece or workpiece holder to guide the workpiece is during the cutting. The cutter descends into the work to make the cut and the workpiece is moved in the lower groove to create the design in the surface. The pin is not used if a fence is used to guide the cutter, when free-hand engraving takes place, or when the edge of the workpiece is used to guide the operation.

Another method used to produce these edge forms is with a *hand router*, a manually-operated power tool that brings the cutter to the work. The router has a bottom surface that bears against the workpiece. A spindle and cutter and, for edging, a collar, extend from the router surface. The workpiece is clamped to a worktable and the operator moves the router along the edge of the workpiece to shape its edge. Various guides are used to make straight and circular cuts. Templates can also be used.

Table saws, radial arm saws, and drill presses can be used to make moldings and formed edges of workpieces if the machine used is equipped with the proper form cutter and the necessary guiding devices are employed.

B7. ***other form, and special cutting and joint-making operations*** - Special machines are also used to make moldings used in furniture and as architectural treatments. Fig. 6B7 illustrates one such machine suitable for machining modest quantities of straight or curved moldings of various cross sections. Fig. 6B7-1 shows a high-production machine capable of machining 100 ft of finished molding per minute.

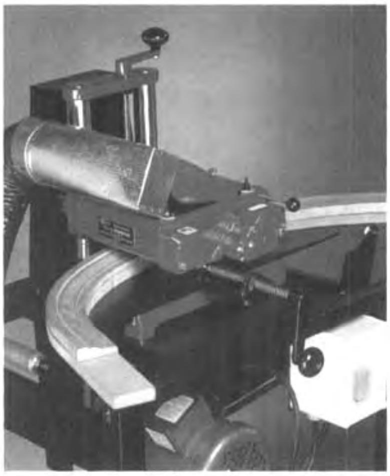

Fig. 6B7 A special machine for making wood moldings used in furniture and in architectural applications. The illustration shows a variable-radius curved molding but other curves and straight moldings can also be produced. This machine uses two flat form tools on the same spindle to produce the desired cross section. (*Courtesy Williams and Hussey Machine Co., Inc.*)

B7a. ***computer-controlled routering*** - Computer control is particularly useful for cutting curved components, those of other irregular shapes, and those that include engraving. It is used to cut cabinet and furniture parts from large sheets of plywood, particle board, or glued-up panels of solid lumber. With computer control (or CNC for "computer numerical control"), the pattern to be cut is stored in the computer's memory or in other devices that store digital data. No templates or other guidance devices are needed. Automatic production is feasible for production of only one piece or for a lot of thousands. The typical computer-controlled router utilizes a fixed table, which may be as small as 8 × 8 inches (20 × 20 cm) or as large as 5 × 12 ft (1.5 × 3.6 m). Mounted above the table is a bridge-like support that holds a powered router with a vertical spindle. The bridge-like support can move a controlled distance along the length of the table. It carries a horizontal slide so that the router can move a controlled amount across the table. The router is mounted on a vertical slide and moves upward and downward under computer control.

Fig. 6B7-1 A high-production molding machine. The machine has an automatic feed and is capable of machining 100 feet of finished form moldings per minute. (*Courtesy Donald Dean and Sons, Inc., Montrose PA.*)

All three motions can occur simultaneously if the shape of the part requires it. Such machines are similar to metalworking milling machines or machining centers as described in Chapter 3, but they are of somewhat lighter, less rigid construction because of lower cutting forces and somewhat less stringent dimensional tolerances that characterize the usual wooden components. As a result, these routering machines are also less costly than metal-working machines of comparable size. Three-axis control is standard, but machines can be equipped with additional axes by making the router mounting adjustable, so that the router can be swivelled and fed at an angle under computer control. The router bit can be of any shape used with manually- or template-controlled routers. Personal computers provide the computer-control and store the programs used. A typical computer-controlled routering machine is shown in Fig. 6B7a cutting out cabinet parts from a plywood sheet.

These machines are used on softwoods and hardwoods, plywood, particle board and on some non-ferrous metals. Typical components machined are cabinet doors, curved moldings, paneling, staircase parts, decorative shelf supports, all kinds of curved furniture parts including those used in upholstered furniture, signs, plaques, wood carvings, and bas relief objects.

B7b. ***laser machining of wooden parts*** - (See section 3O and Fig. 3O.) Computer-controlled lasers are primarily used for contour cutting of thin stock but are also applicable to straight line cutting. CO_2 lasers are used because other types do not provide a beam that is sufficiently absorbed by wood. A high level of accuracy is feasible with laser cutting but the heat of the laser discolors the cut edge and lasers are not normally used to cut out the usual cabinet and furniture parts. Most applications involve the production of decorative pieces of thin stock and veneer, especially when shapes are intricate. Veneer inlays, puzzles, craft pieces, and guitar body parts are laser cut. Mounting boards of fiber board or maple for steel-rule blanking dies are cut with lasers. Another application is the engraving of designs and lettering into wood plaques, trophies, gifts, and panels. Very detailed engravings can be made. Cutting speeds depend on the power of the laser and the type and thickness of the wood, and range from about 15 in to 13 ft (0.4 to 4 m) per minute. A thickness of 1 in (25 mm) is a practical maximum for laser cuts in wood.

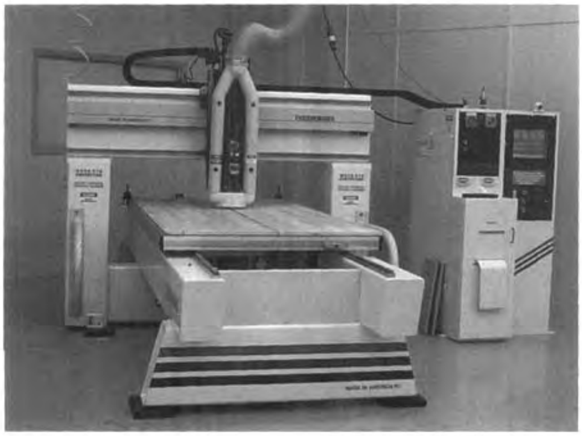

Fig. 6B7a A CNC router cutting cabinet parts from a panel of plywood. (*Courtesy Thermwood Corp.*)

B7c. ***dedicated special machines and multi-operation machines*** - When production quantities are large, special machines are often developed and used to produce common wooden parts. Operations like cutting off and drilling, or cutting off and automatic machining of mortises, tenons, and biscuit slots, may be performed on multiple-cutter machines. Since cutting forces for wooden components are modest, these machines do not have to be as rigid as metalworking equipment and are more easily developed. Air cylinders or mechanical linkages and gearing may power the movement of cutting heads. Products and components made with special machines include tool handles, coat hangers, clothespins, chair legs, picture frames, and pencils.

Some machines are made to perform several operations on families of similar parts. Fig. 6B7c shows one such machine. It machines a form on the edge of cabinet components and finish sands the surface at the edge to remove any burrs or sharp edges. Other multi-operation equipment machines the pockets for hinges and drills screw holes to fasten them, in one automatic operation. Sockets for clip fasteners used in ready-to-assemble furniture are made with similar machines.

B8. ***filing and sanding*** - are operations for smoothing or otherwise modifying the surfaces of wood components after they have been cut to size. Sanding

Fig. 6B7c A combination shaper and sanding machine that cuts a desired shape in the edge of the workpiece and then sands the area near the cut to remove burrs and sharp edges. (*Courtesy Donald Dean and Sons, Inc., Montrose PA.*)

is an abrasive machining operation that utilizes paper or cloth coated with abrasive grains. The operation is normally performed with the aid of powered equipment, which may be hand operated, bench-mounted, or highly automatic. The purpose of sanding is to remove saw tooth and other cutting tool marks, ripple effects from jointers and planers, grooves, dents, etc. Bench-mounted abrasive machines most often utilize continuous abrasive belts backed up by flat or cylindrical supporting surfaces. Exceptions are narrow belt and flap sanders, which rely on belt tension or centrifugal force to provide pressure for the moving abrasives against the wood surface. Flat belt, drum, and disc sanders all may be used. Sanding motion is always along the grain except when board ends are sanded; otherwise, the cutting marks left by the abrasive grains may be visible. Sanding often involves several passes, first with a larger grained abrasive, then with finer abrasive.

C. Making Wood Joints

Several types of joints are used in making cabinets, other wood furniture, and other wood products. Joints of some complexity are relatively easy to produce with wood products because of the ease of machining wood and the precision of production woodworking equipment. The simplest wood-to-wood joint, a *non-positioned joint*, however, is when two wood surfaces come together face to face, with no additional elements on either part to position the parts or hold them together. These simple butt joints include edge-to-edge and surface-to-surface joints, or plain miter joints. They are held together with adhesive or some type of mechanical fastener. The strongest non-positioned joints are those where both the mating surfaces are along the grain of the mating wooden parts, i.e., surfaces or edges. Board ends involved in one or both parts make the joint considerably weaker.

A second joint type, the *positioned joint*, has components that have been machined to fit together in a particular way and may have shapes that lock together. The mortise and tenon, dovetail, and locked miter joints are examples. These joints are stronger than the non-positioned joints because of the holding elements and the larger area of adhesive bonding that is inherent in their shapes. They often also provide more bonding surface along the grain. They aid in proper alignment of the parts to be joined, and hold them together during assembly and gluing. Interlocking joints hold the parts together even if the glue joint should fail.

The third type of joint is the reinforced joint, which uses some extra component for support, in addition to the joined components. Dowels, splines, plates, glue blocks, and "biscuits" are examples of such wooden reinforcing parts, but metal fasteners such as nails, screws, plates, staples, and corrugated fasteners also fit this category.

Most of these joints can be made with the equipment discussed above, though special attachments or apparatus may be advisable in some cases, particularly when interlocking of well-reinforced joints is involved.

C1. ***butt joints*** - The edges of boards to be assembled edge-to-edge or edge-to-surface are first planed or jointed to make them smooth and straight. (See planing and jointing above). Simple glued butt joints can be strong if joined edge to edge, face-to-face or edge-to-face along the same grain direction. The effectiveness of this type of joint is demonstrated by the great number of table tops, carving boards, and other surfaces made from a series of edge-glued boards. Joints involving board ends are far weaker than edge- or face-glued, and it is usually advisable to use some reinforcement or fastener in addition to adhesive. Joints utilizing the grain direction, but with grain directions at right angles or near right angles to

Next Page

one another, may have good initial strength but may weaken over time because of differences in the amount of movement when the members expand or contract from moisture changes. Fig. 6C1 illustrates the typical butt joints.

After adhesives are applied to the surfaces to be joined, butt joint components are firmly clamped until the adhesive has set. Screw, pneumatic, or hydraulic clamps hold the joint surfaces tightly together during this period.

C2. ***rabbet joints*** - are corner joints that aid in positioning cabinet and case members during assembly, provide a more secure joint, and greater strength than simple butt joints. Their greater strength results in part from a larger glue area. The rabbet is a step at the end or edge of a wooden component. Two kinds of rabbet joint are illustrated in Fig. 6C2. Rabbets are machined by one of several methods: two saw cuts at right angles, use of a dado cutter (see below), or by routing or shaping. In small-quantity craft work, special hand planes can be used. Rabbet joints are commonly used in drawers and in the attachment of the back panels of cabinets, bookcases, and similar wood products.

C3. ***dado and groove joints*** - Dado joints include a slot machined across the wood grain; groove joints include a slot machined with the

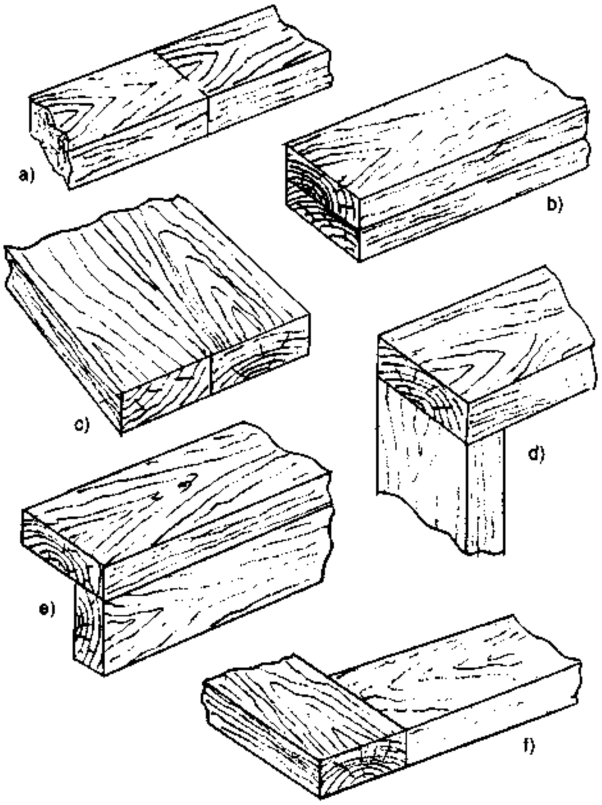

Fig. 6C1 Several butt joints: a) end-to-end, b) face-to-face, c) edge-to-edge, d) end-to-face, e) edge-to-face, f) end-to-edge.

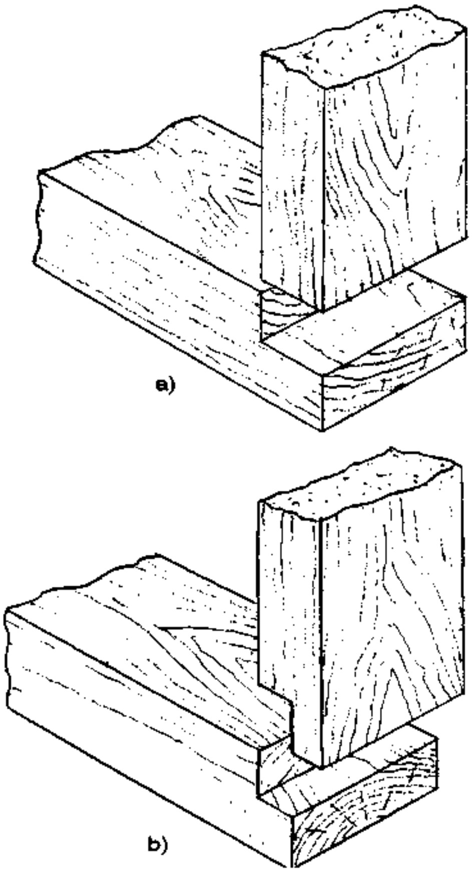

Fig. 6C2 Two rabbet joints. In the full rabbet joint (a), the step on one piece is the same width as the thickness of the mating board. In the half rabbet joint (b), the widths of the steps on both pieces are usually one-half the board thickness.

Previous Page

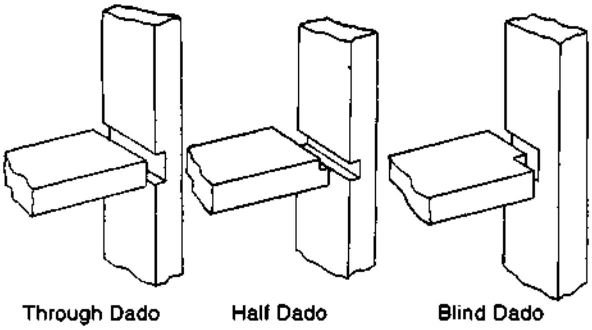

Fig. 6C3 Three common dado joints.

wood grain². The mating parts fits snugly in the slot. Fig. 6C3 illustrates several varieties of dado joints including those that have features of rabbet, and tongue and groove, as well as dado. The slots can be machined in several ways. The most common method employs a circular table or radial arm saw with a dado cutter. Dado cutters are set to cut a slot of the desired width in one pass. This is achieved by incorporating an adjustable amount of wobble so that the blade cuts a wide swath. The other method utilizes two circular cutters with several chipper blades positioned between them. The combined width of the cutters and chipper blades equals the slot width. Shapers and routers can also be used to cut the necessary slots, using a straight bit. When the width of the slot is greater than that of the bit, two or more passes are necessary. The dado joint is common for mounting cabinet and bookcase shelves. The double dado (also called the dado tongue and rabbet) is useful for drawer fronts because it hides the end grain of the drawer sides.

C4. ***tongue-and-groove joints*** - are butt joints with added alignment and strength. The added surface area in the joint provides additional glue area and holding power. Fig. 6C4 illustrates some typical tongue and groove joints. The tongue is typically centered on the edge and its thickness is one-third of the board thickness, as is the width of the mating groove. Tongue-and-groove joints are machined in production on shapers with special cutters that have matching shapes for tongue and groove. The operations can also be performed on table or radial arm saws using dado cutters of the proper width.

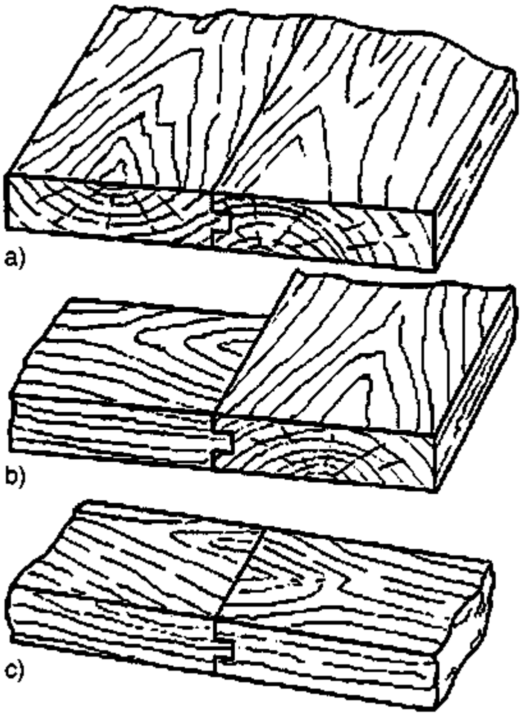

Fig. 6C4 Typical tongue and groove joints: a) edge-to-edge, b) end-to-edge, c) end-to-end.

The tongue can also be a separate machined piece and the mating boards then will both have grooves. Joints of this kind are called splined joints. The spline, a thin piece of wood, hardboard, or plywood, is assembled so that the grain of the spline is at right angles to the grain of the boards being joined. This arrangement produces a joint stronger than a standard tongue and groove.

C5. ***mortise and tenon joints*** - are very strong joints found on quality furniture and cabinets. They are characterized by a projecting tab (the tenon) on one piece that is inserted in a rectangular opening (the mortise) on the mating piece. Fig. 6C5 illustrates a variety of mortise and tenon joints. In many cases the mortise and tenon are hidden and the joint appears to be a simple butt joint. This is the case with the most common blind mortise and tenon joint, where the mortise and tenon extend only part way through the joint. In production, the mortise is made with special machines, similar in appearance to drill presses. A drill encased in a square, non-rotating chisel, makes square holes in a workpiece. The square chisel plunges into the work along with

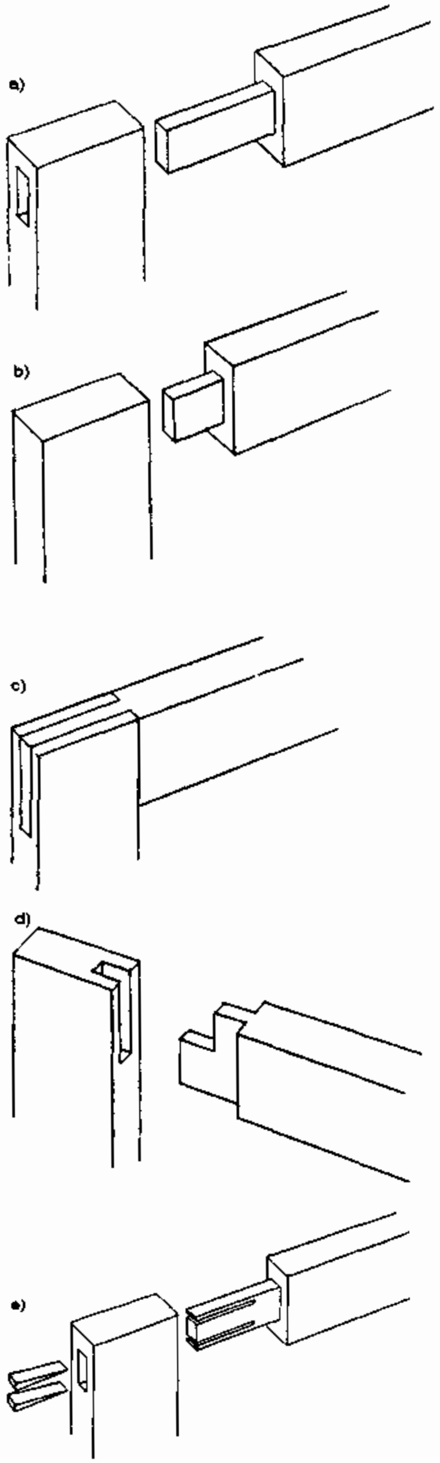

Fig. 6C5 Mortise and tenon joints: a) through mortise and tenon, b) blind mortise and tenon, c) open mortise and tenon, d) mortise and haunched tenon, e) mortise and wedged tenon.

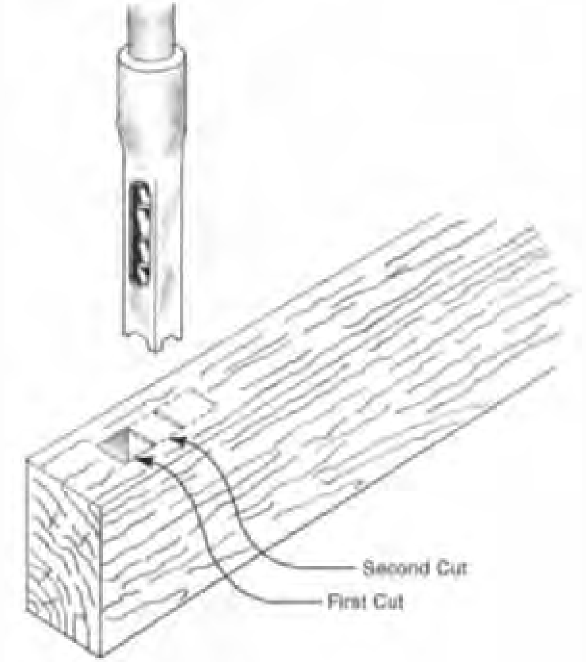

Fig. 6C5-1 Successive cuts with a mortising chisel assembly produces a rectangular mortise in the workpiece.

the drill, converting the round drilled hole into a square shape. A series of square holes, side-by-side and slightly overlapping, make a rectangular slot into which the tenon is assembled, as in Fig. 6C5-1.

In production situations, the mortising machine makes the series of slightly overlapping square holes automatically. In low quantity production, the work is done under manual control in a drill press, with a fence to guide the workpiece. The tenon is also produced by specialized machines when production quantities make it justifiable. Some machines of this type have four cutters to shape the tenon on one end of a workpiece. Some similar machines are double ended so that a tenon is machined from both ends of the workpiece. In limited production situations, the tenon can be cut from the workpiece using a series of table saw cuts, often with suitable fixtures to control the movement of the workpiece against the saw. Tenons are also machined with dado and router cutters.

C6. ***dovetail joints*** - Fig. 6C6 illustrates two common dovetail joints, both of which are sturdy. The appearance of dovetail joints is attractive and the reverse tapers of the dovetails provide a strong

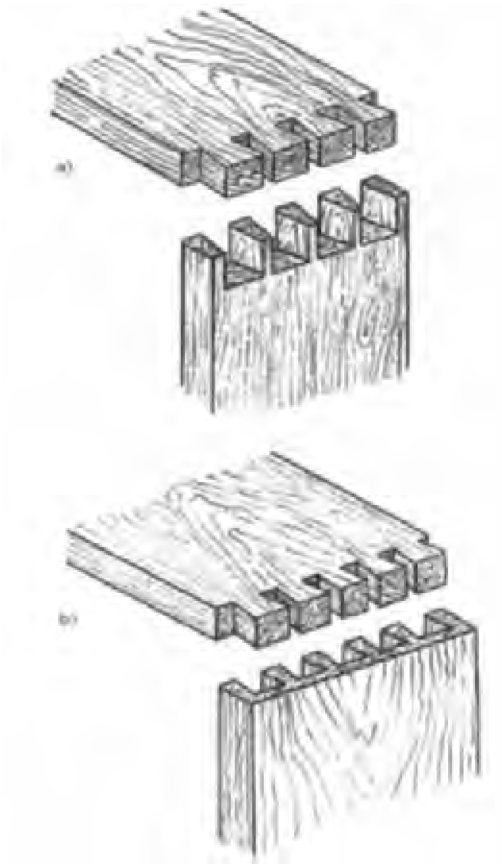

Fig. 6C6 Dovetail joints: a) through dovetail, b) half-blind dovetail

locking effect. Fig. 6C6-1 shows a dovetailing fixture with finished workpieces. A hand router with a dovetail-shaped router cutter is guided by the fixture to machine both pieces. The dovetails are the same size. and are uniformly spaced, where hand-cut dovetails may have different patterns. Fig. 6C6-2 shows dovetail pin and socket shapes produced by the fixture illustrated in Fig.6C6-1. Fig. 6C6-3 shows a machine that makes dovetail joint cuts in both pieces in each automatic cycle.

C7. ***dowelled and biscuit (joining plate) joints*** - provide reinforcement and positioning assistance in the assembly of butt joints. These kinds of joints are useful when curved or angled pieces, which are less easily clamped, are joined. Dowels are cylindrical pins normally made from hardwood or plastic. They are often made with grooves for adhesive and air

Fig. 6C6-1 Fixture for machining dovetail joints with a hand router. The dovetail cutter on the router follows the path controlled by the metal plate and machines both pieces to be joined in the same operation. Both pieces fit perfectly together with a line-to-line fit. (*8 WMH Tool Group, Inc. All rights reserved.*)

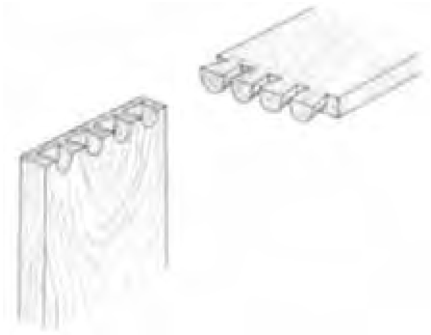

Fig. 6C6-2 Half-blind dovetail cut with a router and dovetailing jig. or with a special dovetailing machine.

Fig. 6C6-3 This semi-automatic machine makes the dovetails of Fig. 6C6-2 with computer-numerical cutter control. The operator loads the two pieces to be joined. The machine cuts all the dovetails simultaneously, using as many of its 25 spindles as necessary. (*Courtesy Dodds Co.*)

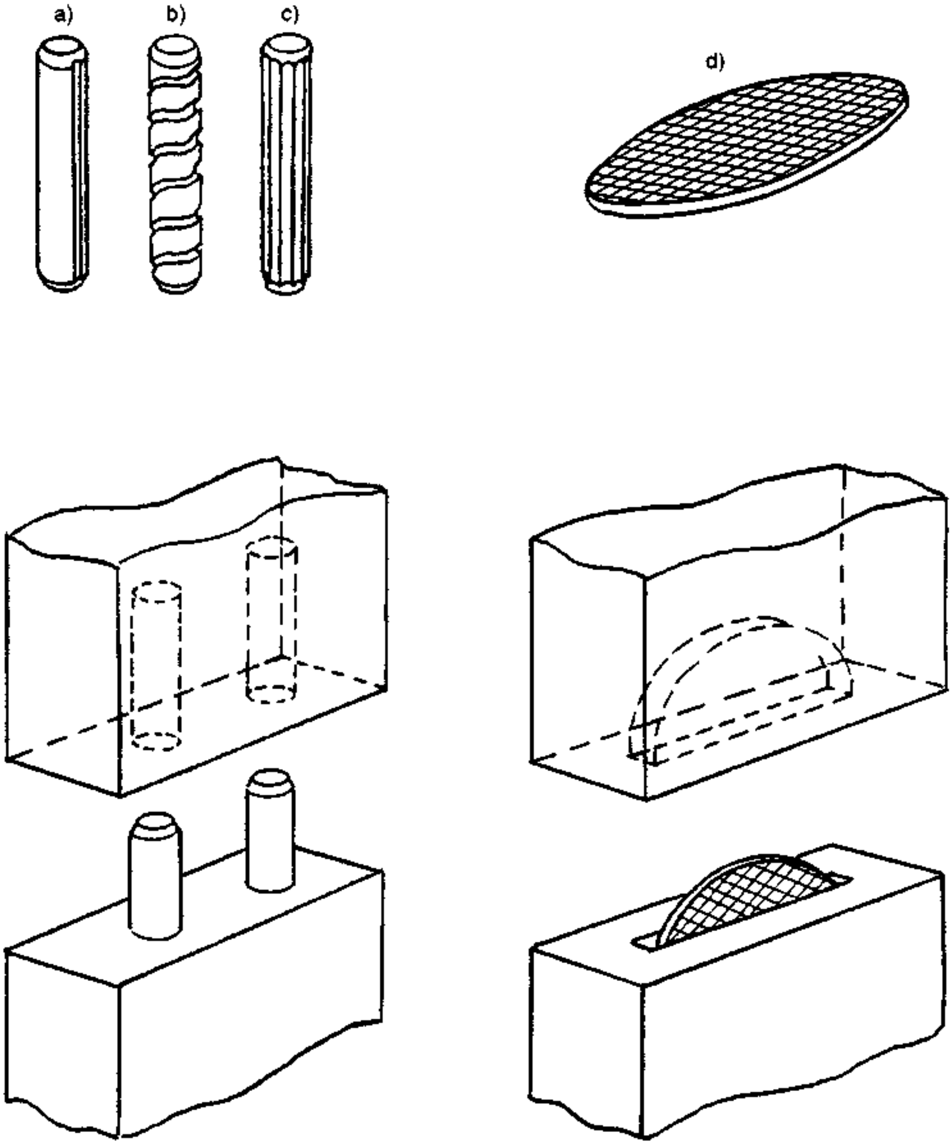

Fig. 6C7 Dowel and biscuit joints. Views a), b) and c) show three different dowel variations, each of which has grooves to contain adhesive and allow air to escape. View d) shows a typical biscuit. The biscuit is compressed but expands in the joint from the moisture in the adhesive to provide a snug fit. The lower views show typical butt joints that incorporate dowels (left view), or biscuits (right view), to provide additional reinforcement, greater glue area, and joint alignment.

flow when the joint is assembled. Biscuits (joining plates or wafers) are small, oval-shaped, compressed plates, usually of birch. Fig. 6C7 illustrates both these approaches. Dowelled joints are not common in production work but are still used in custom or hobby work and can be made with the aid of suitable drill fixtures to locate the dowel holes in the mating pieces. Dowel holes and biscuit slots must be accurately located to insure proper alignment of the parts to be assembled, but current production drilling and slotting equipment will provide the requisite precision. Biscuits are purchased items, made to standard size and thickness. Biscuit slots are made with special machines that provide the necessary alignment accuracy. When glued in place with water-bearing adhesives, the biscuits expand from their compressed state in the joint to form a tight fit. Normally two or more biscuits are used per joint.

C8. ***lap (halved and bridle), scarf and bevelled joints*** - Fig. 6C8 illustrates examples of these joints. Bevelled and scarf joints are made by angling a table, radial-arm, or miter saw, or by using angled guide blocks with a table saw. These joints may be used in assemblies having angled or curved members. Special gluing fixtures may be required for the assembly and bonding of such assemblies. Scarfed joints have greatly increased joint areas compared to butt joints, and allow the joints to be essentially along the grain. They are much stronger than butt joints.

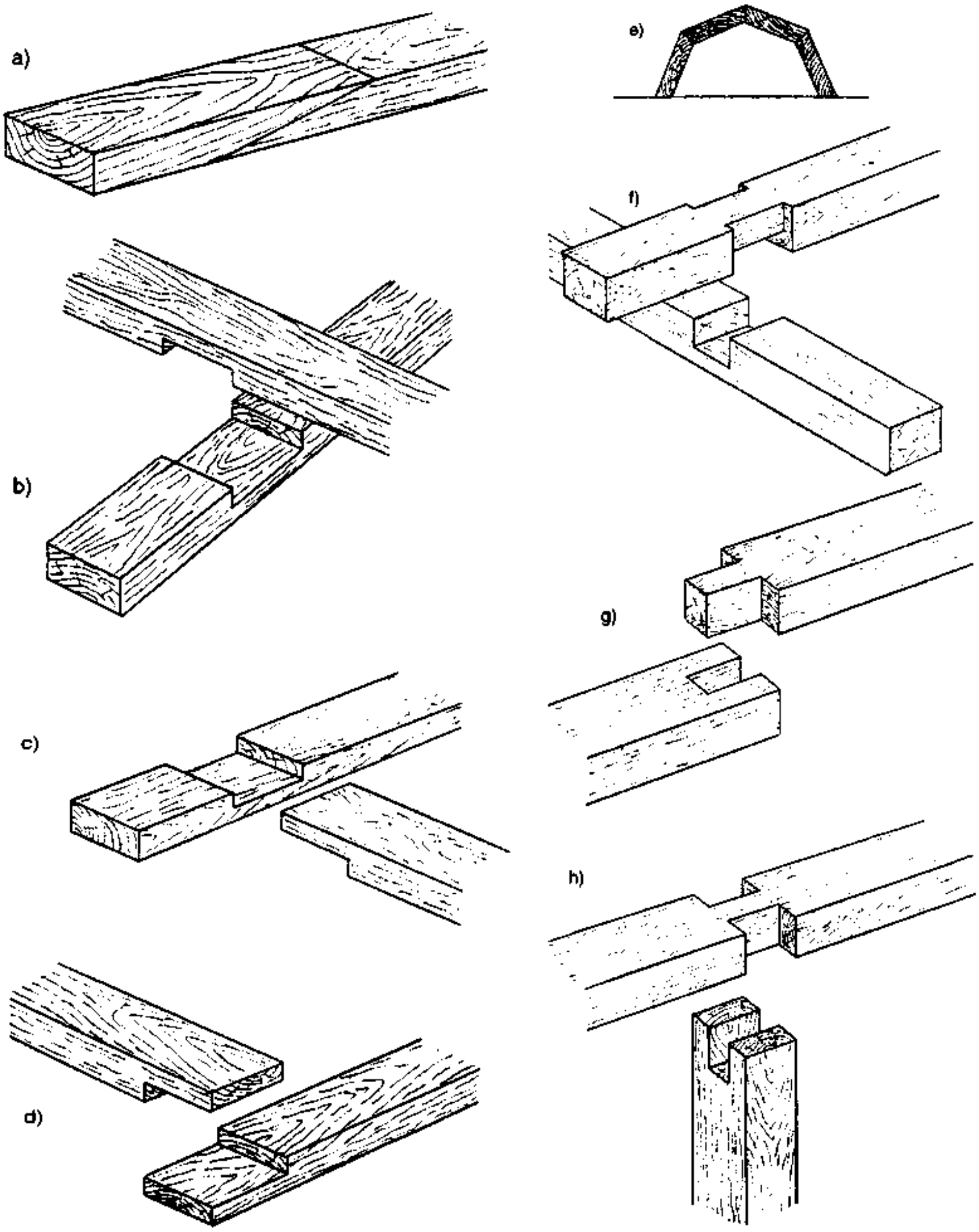

Fig. 6C8 Scarf, lap (halved), bevel, and bridle joints: a), scarf joint, b), middle lap (halved) joint, c), T-lap (halved) joint, d), end lap (halved) joint, e), bevel joint, f), g), and h), bridle joints.

Lapped (halved), joints, unlike butt joints, are normally self-fixturing. Joint cuts for them are normally made with table or radial-arm saws and dado cutters.

D. Making Bent Wooden Components

There are two common methods for making bent wood pieces: wet bending and fabrication of laminated parts. A third method, kerf bending, is less frequently used.

D1. ***wet bending*** - Wood bends much more easily if the workpiece has a high moisture content and is heated. One wet bending method involves heating the wood to 212°F (100°C) in a steam chamber for approximately 3/4 hour per inch of thickness.[1] This treatment softens the fibers so that the wood is in a semi-plastic state. Ends of the workpiece are sealed with varnish beforehand to prevent absorption of excessive moisture. The ideal moisture content is between 20 and 30 percent.[2] Bends made in the wood workpiece, if it is held until the piece cools and dries, will be retained with essentially unchanged curvature.

Another heating method involves immersion of the workpiece in boiling water, but this may increase the moisture content of the wood excessively. The workpiece is bent by hand or in a press, immediately upon removal from the steam chest, and is left in a bending fixture until cooled and dried. Drying may take several days. The fixtures may, themselves, be wooden, but a common element is a flexible spring steel strap, bearing against the outside surface of the bend. This arrangement guards against bruising the wood at pressure points in the fixture and insures a smooth curvature. More importantly, it also shifts the center of curvature so that less of the wood is in tension, which it cannot withstand well, and more of it is in compression, which the wet wood can more easily absorb. See Fig. 6D1.

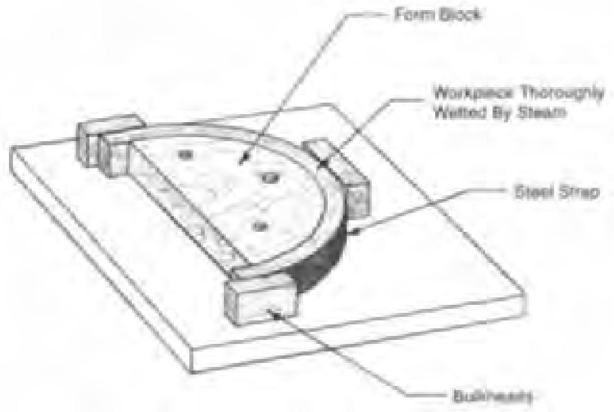

Fig. 6D1 Steam bending a solid wooden component. The steel strap applies compressive force to the outer layers of the workpiece, preventing stretching that would adversely affect the piece.

D2. ***making curved laminations*** - Curved laminations can be made by draping veneers of 1/8 in (3 mm) or less in thickness, coated with glue on mating surfaces, over a male die half. Plies all have the same grain direction. A gap-filling synthetic resin glue is used. The laminated part is kept under the pressure of the closed die until the glue has set. Dies may be heated to accelerate the setting. Sometimes only a male die is used, with a vacuum bag over it to provide the necessary pressure during curing. In other cases, a metal strip or sheet is clamped over the work in the male die. Wax paper may be used between the wood and the steel strip to prevent glue from bonding the strip to the workpiece. An example of a curved, laminated component of high quality, is the cabinet of a grand piano which has a side with an S-shaped curvature. Because of the acoustic requirements, the shape, solidity, and moisture content of these curved laminated pieces are quite critical.[1] Other common applications for curved laminations are chair backs, skis, and tennis rackets. Laminated parts are stronger than solid lumber of the same thickness and, for this reason, lamination is used for wood beams and other highly stressed components. Laminated parts are also less likely to warp than solid pieces.

D3. ***kerf bending*** - uses dry solid pieces. A series of shallow cuts is made in one surface of the workpiece to a depth about 1/16 in (1.5 mm) from the opposite surface. Then the workpiece can be bent relatively easily. Fig. 6D3 illustrates how the kerf cuts react to the bend. If the kerf-cut side of the board is the side that is visible in the final product, a layer of veneer is glued over it. The depth, width, and number of kerf cuts, are critical and usually have to be developed with trial pieces before production takes place. Grand piano bodies are also given curves with this method.

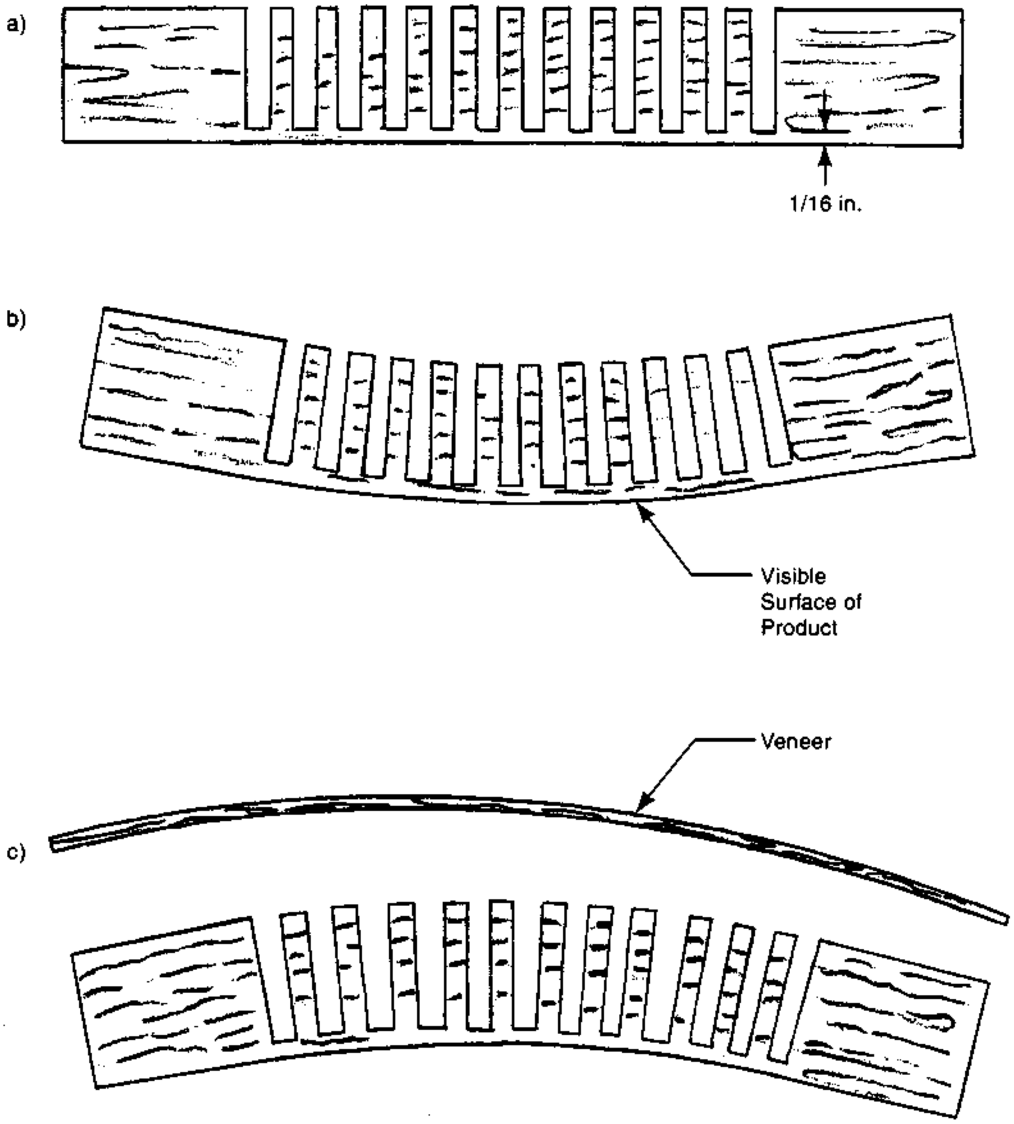

Fig. 6D3 Kerf bending. a) A series of parallel cuts are made from one side of the board to within about 1/16 in (1.5 mm) of the opposite surface. b) The uncut surface then becomes the visible surface of the product. c) If the cut surface is on the exterior of the product, veneer is added to hide the cuts.

E. Assembly and Fastening of Wood Products

Assembly and fastening may involve any of the major classes of joints described above, including simple edge-to-edge, side-to-side, end-to-end connections, or combinations of them. Sometimes these joints are made with only adhesives or metal fasteners, or they may be connections made with the aid of wooden components - dowels or biscuits - or blocks, to aid in locating and holding the separate components together. Or they may be interlocking joints, where the pieces are cut so that they locate

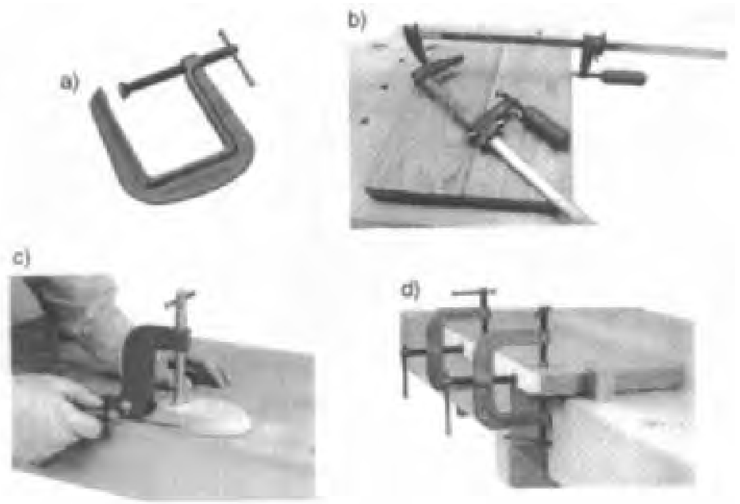

Fig. 6E1 Woodworking clamps: a) C-clamp, b) bar clamp, c) hold-fast clamp, d) edge clamp. (*© WMH Tool Group, Inc. All rights reserved.*)

with one another more positively or are held together, at least partially, by their shapes. Another type of assembly is based on the use of "knock-up" or "knock-down" fittings of metal or plastic, which hold wood parts together. Often, these fittings are used in such a way that the assembly can be taken apart by the user when necessary. A fourth type of assembly is one that permits movement between the wooden pieces. A hinged door and door jamb is a prime example of such an assembly.

Correct alignment of wooden components in an assembly is achieved with one of two methods: 1) fixturing so that the pieces being joined are held in the correct position, and 2) interlocking joints so that the parts are self-locating. Wooden locating fixtures are easily fabricated and generally have sufficient accuracy for parts placement. When interlocking parts are employed, current production woodworking equipment and processes provide the precision necessary for accurate alignment and snug fit.

Wood components are fastened by two prime methods: metal fasteners and adhesives. Sometimes, wooden (or plastic) fasteners are used. During assembly and some machining operations, a variety of holding devices, clamps, vises or fixtures may be used.

E1. ***clamps and fixtures*** - of various kinds are useful in holding wood workpieces for gluing or other fastening, and during some drilling, routing, or cutting operation. Several useful types of clamps are illustrated in Fig. 6E1. Two different fixtures used in assembly of wooden components are shown in Fig. 6E1-1, and 6E1-2. Fixtures are employed in production situations where a number of identical components are assembled. They provide assurance of accurate alignment of parts and consistent and accurate dimensions of the finished assemblies.

E2. ***mechanical fastening*** - The variety of metal fasteners used in woodworking is extremely broad, ranging from common household nails to special fas-

Fig. 6E1-1 Gluing fixture for edge-bonded panels. Individual boards have glue applied from an applicator roller on the roller conveyor. The operator positions each board on the fixture, which holds it securely under sufficient clamping pressure until the glue sets. (*Courtesy Donald Dean and Sons, Inc., Montrose PA.*)

Fig. 6E1-2 Gluing fixture for assembly of cabinet doors. Pneumatic clamps provide pressure to seat all components and to square the assembly. The fixture can hold the panel assembly together until the glue sets, but most commonly is used only temporarily. After clamping, headless pins are driven into the panel to hold it together until the glue sets. (*Courtesy Donald Dean and Sons, Inc., Montrose PA.*)

teners that draw parts together when tightened. The latter are particularly important with ready-to-assemble furniture that is sold fully disassembled. The parts of such furniture usually come with fasteners that utilize screw threads, cam surfaces and eccentrics to drive components tightly together. Tightening one screw fastener draws against the angled surface of another fastener component to push or pull the mating part into place. Ready-to-assemble furniture kits also often include plastic elements attached to the wooden components that allow two parts to be pressed together or driven together with hammer strokes. Components normally come with pre-drilled holes for screws, dowels, and other fasteners, and pre-machined pockets for hinges and special fasteners. Common metal fasteners may be hidden in woodwork with wood putty or wooden plugs.

E3. ***adhesive bonding*** - See Section 7D of this handbook for coverage of adhesive bonding in general, including wood products. Also see *adhesives*. Adhesives that have a history of use with wood products include glues made from animal and vegetable materials. Synthetic glues made from thermosetting plastics have gained ascendancy for use in commercial woodworking, however, because of their superior properties and ease of use. The most common woodworking adhesives, include the following which are available in ready-to-use liquid form: hide glue, polyvinyl acetate glue, and alphatic resin glue. Water-mixed glues for woodworking include casein glue and plastic resin glue. Resorcinol glue is a two-part woodworking adhesive. Table 6E3 summarizes properties and working arrangements for a number of glues used in wood product assembly.

The techniques used in bonding wood parts parallel those used when bonding other materials. The surfaces to be bonded should be clean, especially free of greases and oils but also of dust, moisture, and other foreign materials. The best joints for adhesive bonding result when the joint is along the grain of the wood, face to face, face to edge, or edge to edge. End grain butt joints do not hold adhesive well. The adhesive may be applied by rollers, spray guns, brushes, toothed spreaders, or spatulas. Some wood glues work best if the gluing takes place soon after the surface has been machined. Woods with moisture content of 20 percent or more can present bonding problems, especially with water-based glues.

Glue joints, especially butt joints, are normally clamped after they are assembled. This ensures that the glue is distributed in a uniform, thin film and the clamps hold the parts until the glue has set. Optimum gluing pressures are 100 to 250 psi (700 to 1700 KPa).[5]

The curing of wood glues, both the types that require evaporation of a solvent and those that cure by polymerization of plastic resins, are accelerated by application of heat. Heat is commonly used to cure glues used in wood products. Heating methods include various oven methods using forced heated air, or radiant heat sources; resistance-heated platens, or metal strips in contact with wooden joint members; and induction/microwave heating of the glue itself.

Fig. 6E3 illustrates a special machine for applying glue for the assembly of dovetail joints.

E4. ***Assembly of veneer and inlaid surfaces*** - is inherently a manual operation, requiring considerable operator skill to insure a tight bond, to get a good fit of pieces in marquetry, and to eliminate splitting of veneer and other defects. (Marquetry is

Table 6E3 Common Adhesives for Woodworking

Name or Type	Characteristics Properties	Working Arrangements	Applications
Hide glue	liquid strong no moisture resistance	indefinite pot life short assembly time clamp for 2–3 hrs	fine furniture
Casein glue	strong good moisture resistance	mix powder with water short pot life and assembly time clamp for 2–3 hrs	oily woods
polyvinyl acetate (PVA)	white liquid strong little moisture resistance	long pot life fairly short assembly time clamp for 1–2 hrs	interior cabinets and furniture
aliphatic resin	cream-colored liquid stronger and more solvent resistant than PVA	short setting time clamp for 1–2 hrs	general woodwork
epoxy	paste or viscous liquid excellent moisture resistance	mix resin and catalyst, then short pot life	metal to wood glass to wood
contact cement	viscous liquid no clamping needed	apply to both surfaces	fasten veneers or laminates to wood

the art of fitting together pieces of veneer to create a design.) The traditional hide glues have been replaced with water-based synthetic resin adhesives, which somewhat reduce the skill required. These glues have a longer tack time and allow more time for aligning the veneer. (Hide glues also penetrate the thin veneer and can interfere with later filling or staining.) Veneer pre-coated on the back with hot-melt glue is another alternative. After this veneer is positioned and aligned, the assembly is heated to melt the glue. Applied adhesive should be in a thin layer, which must be uniform in thickness.

When veneer sheets are to be joined on one surface, or when inlays are used, the veneer pieces can be fitted and taped together, and laid on the surface as one piece. The synthetic resin adhesive must be of a uniform thickness; the veneer is pressed against the surface in a hydraulic, pneumatic, or mechanical press until the adhesive has set. Veneer is usually laid to overlap all edges of a surface. After the adhesive thoroughly sets, the excess can be trimmed off with a hand trimming tool, which resembles a plane but has a sharp vertical knife that cuts the veneer both with and across the grain.

Another technique with inlays or joined sheets of veneer is to overlap them and make a cut with a sharp knife midway in the overlap area. The trimmed pieces from each sheet are then removed

Fig. 6E3 A glue applicator machine for dovetail joints. When the board with dovetails is inserted, the machine dispenses a measured amount of glue from a manifold to each dovetail. (*Courtesy Dodds Co.*)

and the edges pressed against the substrate surface. The grain of a veneer laid on a board should be in the same direction as the grain of the board; with plywood, the veneer grain should be at right angles to the grain of the top layer of plywood.

F. Manufacture of Plywood and Other Panel Materials

Plywood and other panel materials are often advantageous for use in wood products because of increased stability, strength properties, or lower cost, or a combination of these properties. Stability, or freedom from warping or splitting, is an important factor. Cost is another. They are also available in much wider dimensions than can be obtained with natural lumber. All panel products used in woodworking are made from wood or wood fibers, and utilize adhesives to bond smaller or thinner pieces of wood or wood fiber together. In cabinet work, they are more apt to be used for internal, less visible, components because of appearance factors, but they can be finished with veneer or printed laminations to provide the appearance of solid lumber. Manufactured panels, other than plywood, are sometimes known as *composite panels*.[5]

F1. ***making veneer*** - Wood veneers are thin wood sheets used primarily as structural material in plywood or as visible surface material in cabinetry and architectural panels. Veneers are almost always cut by slicing a thin sheet of wood from a log or flitch (part of a log) although saw cutting can still be used. (Saw cutting can produce very good veneers but results in a loss of about half of the wood from the log as sawdust.) There are two prime cutting methods: rotary peeling and flat slicing. In both methods, the logs are selected for their freedom from knots and other defects and for a desirable grain pattern. The logs are cut to length, debarked, trimmed as necessary to cylindrical shape, and immersed in boiling water for a prolonged period to soften and heat the wood grain. While still hot from boiling, logs for rotary peeling are mounted on a lathe that includes a fixed horizontal knife at least as long as the log. As the log rotates, the knife is fed forward slowly to slice a thin sheet of wood from the log surface. The operation proceeds, peeling the wood from the log in one thin continuous web. The web is then sheared into sheets, graded, and sorted, repaired as necessary when there are knots and other defects, dried in drying equipment, and stacked for later use. Drying may be performed on a batch basis, or by feeding the veneer through the length of a drying oven on a roller system or a belt conveyor. Rotary-cut veneers are typically from 0.013 to 0.375 in (0.33 to 9.5 mm) in thickness. 1/28 in (0.9 mm) and 1/40 in (0.6 mm) are common thicknesses. The distinctive grain pattern of rotary cut veneer is somewhat different than the grain pattern of solid lumber. This prevents its use in furniture and panel surfacing where authentic solid lumber appearance is needed. It is, however, the prime veneer type used in structural plywood.

Flat-sliced veneers are produced in special machines. Logs are first rip cut in half or in quarters to make flitches. Boiled and heated flitches are attached to a flitch table. The table moves vertically up and down against a sturdy slicing knife, which is at least as long as the flitch. With each downstroke, the knife cuts along the grain to produce a wide ribbon of wood from the length of the log. After each downstroke, the slicing knife is advanced the thickness of the desired veneer and, with the next downstroke, another sheet is produced. Each sheet is as long as the flitch and as wide as the section being cut. Typical flat-sliced face veneers are from 0.010 to 0.035 in (0.25 to 0.88 mm) thick. 1/60 inch (0.4 mm) is a common thickness. Fig. 6F1 shows rotary slicing and two approaches to flat slicing.

Veneer techniques are also used to make thin wood pieces for other applications such as coffee stirrers, ice cream sticks, and basket weaving material, and for forming with suitable adhesives into trays or other formed objects.

F2. ***making plywood*** - Plywood consists of panels of wood made from an odd number of layers of veneer glued together. The grain direction of each layer is at right angles to that of the adjacent layers. Plywood, especially that intended for construction use, is most commonly made from Douglas fir and other softwoods that can be rotary peeled with little waste (See veneers). Plywood for cabinet and furniture use normally has hardwood veneer on at least one surface and may have hardwood in the core veneers. Particle board may also be used as a core material. Fig. 6F2 illustrates some common plywood construction. The veneer is cut into convenient

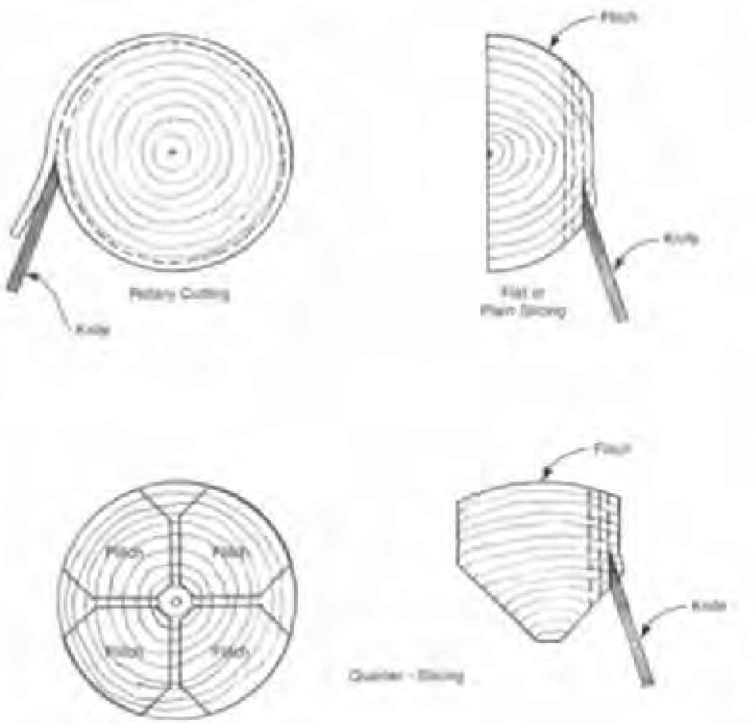

Fig. 6F1 Cutting veneer by three basic methods, each of which produces a different grain pattern in the veneer.

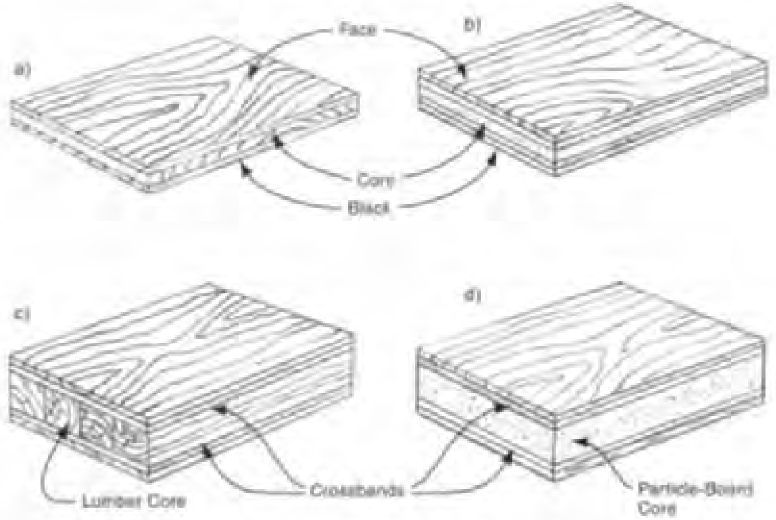

Fig. 6F2 Some common plywood constructions: a) three-ply veneer plywood, b) five-ply veneer plywood, c) five-ply lumber-core plywood, d) five-ply plywood with particle board core.

lengths and is dried to a moisture content of from 5 to 14 percent (depending on the adhesive used). Defects are repaired by cutting them out and inserting plugs of acceptable material. Splits may be taped. If necessary, narrow pieces are edge glued together. (This is especially so with face veneers, where good appearance may be necessary. Face veneers may not be rotary cut and individual pieces, therefore, will be narrow.) Glue is commmonly applied by roller applicators, but also by spraying or curtain coating, to each sheet. Some odd number of sheets, usually 5 or 7, are stacked together with each sheet having the grain direction at right angles to the direction of the adjoining sheets. However, some plywood has as little as 3 layers with a central core of solid lumber.

Lumber core plywood is more common in thicker grades or when the edges are intended to hold hardware or be exposed. The adhesive is cured with the sandwich of sheets under heat and pressure, in heated hydraulic presses. These presses typically have from 5 to 25 openings for the assembled plywood. Platen temperatures are typically 175 to 350°F (80 to 180°C). The platens are heated by hot water, steam, or hot oil. (Assemblies may be lightly cold pressed to facilitate handling and loading before they are inserted into the heated hydraulic presses.) Waterproof adhesives are used for exterior grade plywood. The plywood sheet is then trimmed to size and the surfaces are machine-sanded by belt or drum sander for smoothness and final panel thickness. The final moisture content is normally 12 percent or less.

There are two basic applications for plywood. Softwood plywood is used as panels in buildings and in other commercial construction. Hardwood plywood is used in the manufacture of furniture, for interior wall panelling, for sporting goods, for industrial fixtures, and for equipment bases and parts. The standard size for construction plywood is 4 by 8 feet (1.2 by 2.4 m) in thicknesses up to 1 in (25 mm). Hardwood plywood is produced in these and other sizes.

F3. ***making wafer board (chipboard)*** - Wood chips, approximately 1 to 2 in (25 to 50 mm) long and of various widths and thicknesses, are machined from debarked logs and scrap lumber with special machines. Sawdust and other residues are not used. The chips are inspected and selected, mixed with a plastic resin adhesive (usually phenolic) and spread in random orientation on heated press platens. The presses force the chips into a board of uniform thickness and the heat cures the adhesive. The boards are trimmed to size, normally 4 by 8 ft (1.2 by 2.4 m) and the surfaces are sanded. These boards are less expensive than plywood to produce, and find numerous applications in the building industry where sheet material is needed. An average breaking strength in bending is 2400 psi (17 MPa).[5] Common uses are as an underlayment for exterior walls and roofs.

F4. ***making oriented strand board***[2] - uses methods similar to those used for making wafer board except that the chips are oriented in specific directions in layers instead of being allowed random orientation. Typically, the outer layers are oriented in the direction of the long dimension of the panel and are separated by a central layer in the perpendicular direction. In a this sense, oriented strand board is similar to plywood. The three layers and the strands of wood are all bonded together with phenolic resin, with heat and pressure. The board has a high resin content and high strength. An average breaking strength in bending is 8000 to 10,000 psi (55 to 69 MPa).[5] Thinner board, from 1/4 in (6.3 mm) thick is used in cabinet work for cabinet backs and drawer bottoms. Sheets from 3/8 to 1/2 in (10 to 13 mm) thick are used for subfloor sheeting and roof and wall underlayment. Sheets thicker than 1/2 in (13 mm) and up to 23/32 in (18 mm) are used for single-layer flooring. Surfaces of oriented strand board may or may not be sanded smooth, depending on the intended application.

F5. ***making particle board*** - Particle board is similar to wafer board but the chips are much smaller. The manufacturing steps are very similar, but sawdust and other small particles of wood are used, as well as green logs. The grinding of wood material into particles is more extensive, a richer mixture of resin (urea, phenolic or melamine) is used on surface layers, and wax may also be added to surface layers. The increased resin adds to the strength of the boards and the wax provides water repellency[2]. The material is subjected to pressure and heat to compact the particles and cure the resin. The process is also very similar to that described in section F6 below for fiberboard. Particle board is used in furniture and in construction. It may be laminated with veneer, or finished with paint, film, or paper, and printed with a wood grain pattern.

Particle board is made in densities ranging from 30 to 70 lb/cu ft (480 to 1120 kg/cu m). Although standards differ with manufacturers, low density particle board, used for door cores, generally has a density of from 30 to 40 lb/cu ft (480 to 640 kg/cu m). Medium-density particle board, used extensively in furniture, generally has a density of 40 to 50 lb/cu ft (400 to 800 kg/cu m). High density board, used for core material in plywood, generally has a density of 50 to 70 lb/cu ft (800 to 1120 kg/cu m).

Thicknesses range from 1/4 in (6.3 mm) to 1 $^7/_8$ in (48 mm).

Medium-density particle board has the following manufacturing operation sequence: 1) Bark is removed from wood logs, both hardwood and softwood. 2) Logs and wood scrap are reduced to chips. Chippers, hammer mills, disc cutters, or knife-ring-flakers. all may be used. 3) The chips are ground into fine particles. 4) The mixture is then dried. This is a continuous process using rotating cylindrical dryers in which the particles are suspended in hot air while moving from end to end. Steam, hot water, or hot oil, circulating in tubes, supplies the heat. 5) Particles are then sieved with vibrating screens or air classifiers to remove oversize particles, that can later be reduced in size, and to remove undersize particles that would necessitate using excessive adhesive. 6) Adhesive, commonly urea (Phenolic or melamine is also used.), in liquid form, is added along with wax and other additives. Adhesive comprises 3 to 10 percent of the weight of the mixture. The wood particles and adhesive are blended in mixing vessels. 7) The mixture is spread as a mat on a belt conveyor by equipment that concentrates the finer particles at the surfaces and the larger particles in the core of the mat. 8) The resulting mat is pre-pressed between flexible metal webs to partially compress it. 9) The mat is cut into separate pieces. 10) Cut pieces are loaded and stacked in a heated platen press with steel plates separating the layers. 11) The pieces are compressed by hydraulic pressure and subjected to heat of 280 to 400°F (140 to 200°C) to cure the thermosetting adhesive, forming panels that are most often 3/4 in (19 mm) thick. 12) Panels are rough trimmed to squareness within ±1/2 inch. Scrap wood is used as a fuel to provide the heat needed by the process 13) Panels are sanded on both the top and bottom surfaces with belt or drum sanders. 14) Panels are cut to the desired size, commonly the same standard 4 × 8 ft (1.2 × 2.4 m) size of wafer board and plywood. Panels may also be cut into boards at this point. 15) Groups of panels or boards are strapped together and moved into stock.

Particle board is used in furniture and in construction. It may be laminated with veneer or finished with paint, film, or paper, and printed and impressed with a wood grain pattern. Floor underlayment is a major application for particle board.

Some particle board is made by extruding the mixture of wood particles and resin through heated dies. Surface laminations are bonded to the board as part of the same operation. Board is made by this method in the high-volume production of bathroom and kitchen counter tops, particularly when there is a curved edge.

F6. ***making fiberboard*** - Fiberboard is a heavy sheet material made from wood fibers and other organic fibers pressed together. The fibers are deposited on a conveyor in sufficient depth to form into mats. They are in random orientation, often with small amounts of synthetic resin adhesive. The mats are then cut into sheets called wetlaps. The wetlaps are subjected to pressure and heat, which bonds the fibers together. Heat may be provided by radio frequency induction. The board panels thus made are quite strong. Three different density grades are produced: *hardboard, medium density fiberboard,* and *insulation board.*

Hardboard, high density fiberboard, is produced using the highest pressure and is available in densities of 50 to 80 lb/cu ft (800 to 1280 kg/cu m) but, most commonly, 60 to 65 lb/cu ft (960 to 1040 kg/cu m). Common thicknesses are 1/8, 3/16, and 1/4 in (3.1, 4.7 and 6.3 mm). Standard widths are 4 ft (1.2 m) and lengths are 8, 12 or 16 ft (2.4, 3.6 or 4.8 m). The brand name, Masonite, has become rather generic for these hardboards, which are quite strong and abrasive resistant. They are used extensively in wall paneling, drawer bottoms, and hidden back panels of cabinets. The boards are made from long wood cellulose fibers and lignin of the wood serves as a bonding agent. The finished boards may have a smooth surface on one or both sides. They are available as peg board, panels with regularly-spaced perforations that can be used to mount metal hooks for tools, household implements, etc.

Tempered hardboard is regular hardboard given a secondary treatment with liquid resin at the surface followed by heat curing. This treatment increases hardness, wear, and moisture resistance, strength, and stiffness further, and raises the density to 60 to 80 lb/cu ft (960 to 1280 kg/cu m).[5]

Medium density fiberboard (MDF) is available in thicker panels than high density, typically from 3/8 to 1 in (10 to 44 mm) thickness and in the same lengths and widths as high-density board. Urea is typically used as an adhesive and wax may be added.

The mats are stacked in a press with steel sheets as separators. Hydraulic pressure with heat cures the thermosetting adhesive. The board has a density of 32 to 50 lb/cu ft (512 to 800 kg/cu m). Medium density fiberboard is a plywood or particle board substitute. Cabinet tops, drawer fronts, and shelving are typical applications. It is also used for moldings and other millwork. It can be stained, painted, laminated, or printed with wood grain. It is equally strong in all directions and can be cut with moderately smooth edges without finish sanding. It is not as strong but much more dimensionally stable than lumber.

Low density fiberboard, insulation board, is light in weight with densities of 10 to 30 lb/cu ft (160 to 480 kg/cu m). It is typically made in 1 in (25 mm) thick, 4 by 8 ft (1.2 x 2.4 m) panels. The manufacturing process involves the cold compression of mats of wood fibers without bonding resin, followed by drying and trimming. The natural cohesion of wood fibers provides the bonding force. It is used as a backing for exterior siding in building construction, as board material in upholstered furniture, bulletin boards with a cork or burlap surface, and in other fabrication situations where high strength is not needed.

F7. ***making engineered lumber, prefabricated wooden beams, and joists***[5] - The term, "engineered lumber" refers to composite wood components which have size, quality, or effectiveness that is superior to those of conventional one-piece lumber. Hoadley[5] recognizes four classes of such components: finger-jointed lumber, glued-laminated components, structural composite lumber, and composite I-joists.

Finger-jointed lumber incorporates joints similar to that in Fig. 6F7 to produce long lengths of knot-free material for such items as door and window parts, stair railings, strip moldings, closet poles, and trim pieces.[5] The finger joint provides a moderately high-strength scarf joint without wasting a large amount of material. The joint is made automatically in special equipment that machines the ends of the pieces to be joined to the proper mating shapes, applies adhesive, clamps the pieces together, and applies microwave heat to cure the adhesive. Joints have approximately 75 to 85 percent of the strength of knot-free wood.

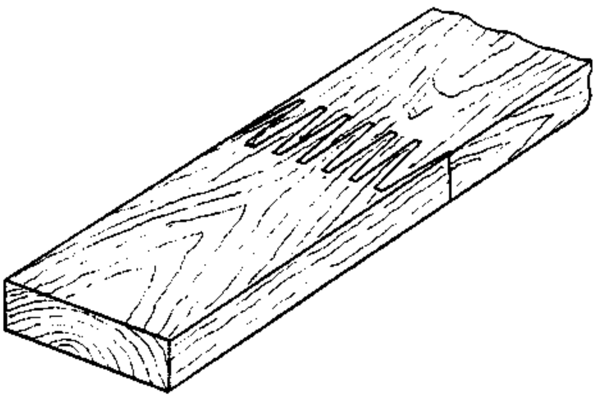

Fig. 6F7 Finger joints, like this one, provide ample glue area and mating surfaces along the grain, both of which add to the strength of the joint.

Glued-laminate components, "glulam", consist of structural members made from layers of thinner boards glued together face-to-face with their grain in the same direction. Beams and arches are common applications. Long components can be made from smaller pieces. The resulting member is stronger that an identically-sized member made from one piece of lumber and its strength is more predictable. Most such members are manufactured in one-of-a-kind or limited quantities for specific architectural applications. However, some standard beams and joists made by this method are available.

The term, *structural composite lumber (SCL),* refers to a family of products made from veneer, strands, chips, and particles glued together to form lumber or timbers. They are of the same sizes available in single, solid pieces, except that longer lengths are feasible. This lumber can then be machined and assembled with the same or similar methods used for conventional lumber, but it has superior strength and stability characteristics. Depending on its construction, this material is made with veneer, strands, and/or particles glued and pressed together and trimmed to standard sizes. It is used in applications where greater strength or length are required.

I-joists are wooden structural members with a cross-section similar to that of steel I-beams. A thin central web connects thicker and wider elements at the top and bottom. The central web can be made of plywood or oriented strand board. The top and bottom flanges are made of structural composite lumber or high-quality finger-jointed conventional lumber. See Fig. 6F7-1. Waterproof adhesives are

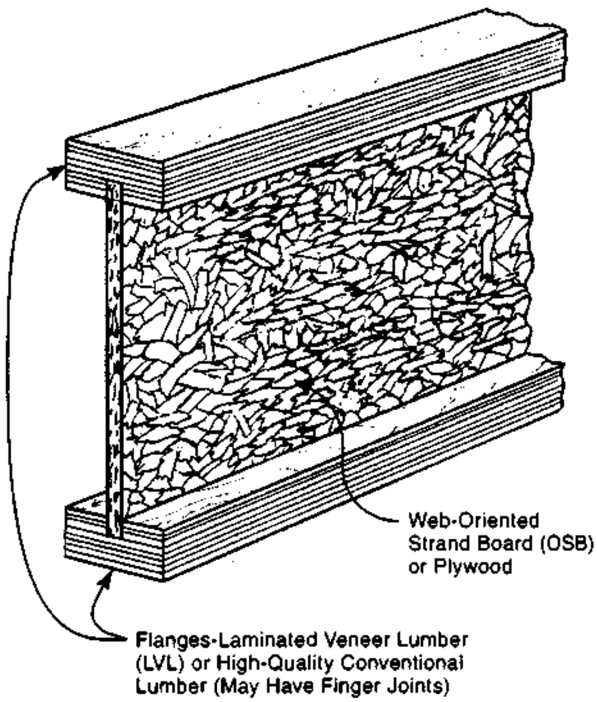

Fig. 6F7-1 An I-joist made from engineered lumber.

used in all components and in the assembly of the joists. These joists have superior stiffness compared to the solid lumber joists used in house construction and can span greater distances.

F8. ***making rigid plastic laminates (high pressure laminates)*** - Decorative surface materials such as Formica and Micarta are normally made from layers of kraft paper impregnated and bonded with phenolic resins. A cover paper is printed with whatever decorative pattern or design is wanted and is impregnated with melamine resin. The top sheet is coated with melamine resin for protection against scratches, dents, heat, and attack from moisture or chemicals. The multi-layered material is placed in a heated press with highly polished platens. Heavy pressure and heat polymerize the phenolic and melamine resins to produce a laminate of about 1/16 in (1.5 mm) in thickness.

The top melamine coating may have a glossy, satin, or other finish, including textures, depending on the intended use and nature of the decorative pattern. Wood grain laminates are textured to simulate the feel of real wood grain. Fig. 6F8 illustrates the composition of a rigid plastic laminate. The laminated board is often bonded to plywood or particle board for support. The back of the bottom sheet is kept somewhat rough to aid in the adherence of the laminate to a substrate. Several grades and thicknesses of rigid laminate are available to permit post forming to make curved surfaces and use in wall panels and cabinet interiors.

F9. ***making synthetic lumber (composite lumber) and components from plastics*** - Two fairly important synthetic wood products made from plastics are available: One consists of injection-molded polystyrene parts that are molded with a wood grain appearance. They often have shapes that replicate carved wooden parts like drawer pulls, cabinet panels with carving, and other decorative components. These moldings can be finished to have the appearance of expensive carved wooden parts. The other significant synthetic lumber products are boards that are extruded from recycled plastics, usually with a wood filler. There are numerous formulations for the synthetic boards. Most utilize high density polyethylene derived from waste bottles and jugs, with ample ground-wood fill material including sawdust and wood waste. This combination makes very good deck boards that are virtually immune to warping, rotting, or splitting. They are, however, more costly

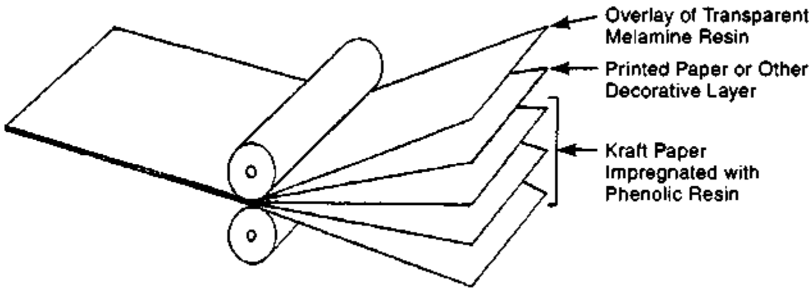

Fig. 6F8 Construction of rigid plastic laminate. Phenolic and melamine thermosetting plastics bond layers of paper-and sometimes other materials-into one rigid sheet.

than treated lumber, with which they compete for use in outdoor decks, porches, docks, boardwalks, and similar applications. Railings and posts are also made of this material. However, the materials are not usually recommended for structural applications such as joists, studs, beams, stringers, or columns. They can be nailed and cut or drilled with woodworking equipment utilizing carbide cutting tools. Boards are typically 50 percent wood fiber and 50 percent recycled plastics, though wood fiber content of 60 percent is not unusual. Boards may be made with other fill materials in addition, or in place of, wood fibers. Coal fly ash, waste glass, textile fibers, rice hulls, and sand have also been used as filler material. Some boards are extruded with foaming agents to produce a cellular structure.

G. Wood Finishing

Finishing is undertaken to protect the surfaces of wood products, to enhance the appearance, usually of the wood grain, to seal the pores of the wood, to provide a different or matching color, and to provide resistance to wear, liquids and chemicals, and to provide easier cleanability. Natural oils, dyes, and waxes, used in earlier times as finishing materials, are still in use, but production woodworking now relies primarily on synthetic materials. These materials are easier to use and have improved properties. Mass-production finishing methods are used in much of the woodworking industry, but the fact that appearance and style are important in furniture, leads to decorations, such as antiquing, stencilling, or application of decals that require manual operations.

G1. ***preparing surfaces for finishing*** - can involve any of the following steps: visual inspection to identify defects and decide which prefinishing steps are needed; sanding the surfaces for better smoothness, removing cutter marks and slivers and slightly rounding edges and corners; bleaching to remove any unwanted coloring; repairing of dents, scratches, cracks, and other defects; removal of excess adhesive, if any; and distressing the wood with marks, dents, etc., if the objective is to give an antique appearance. Sanding prior to finishing normally is done with a progression of abrasive sizes ending with the finest-grained abrasives and is performed both manually and automatically. See B8 above. Some open-grained woods such as walnut and oak are given a coating of a paste filler prior to sanding in order to fill indentations and produce a smooth surface.

Bleaching is used to remove stains or to change natural wood colors for some desired finishing effect. Bleaches are applied in liquid form by brush, rag, sponge, or spray. Some bleaches require a rinse or neutralization application, or both, after the bleach has acted. Oxalic acid, dissolved in water from powder or granules, is a common commercial wood bleach. Chlorine laundry bleach is also used for many woods and stains. Different woods and stains vary considerably in their ability to be bleached. Oak is easy to bleach; cherry is difficult. Penetrating oil stains do not always respond to water-based bleaches, which tend to work only at the surface. Application of mineral spirits or paint removers may also be needed.

G2. ***staining*** - Stains are dyes or pigments or both, carried in a liquid. The liquid may be water, "spirit" (alcohol or acetone), or oil. Stains are absorbed in the wood but do not obscure the grain pattern. They are applied to enhance or alter the grain appearance or modify the color of a wood. Sometimes their purpose is to hide an unattractive grain. One other purpose is to make a lower-priced wood appear to be a more expensive species. Stains are applied by spraying, brushing, wiping, rolling, or dipping. Excess stain is often wiped off after the wood has absorbed the color desired. Water-based stains raise the grain of the wood and light sanding usually follows the stain application. Some woods receive a wash coat before staining. This is a highly diluted coating of a sealer such as shellac or lacquer. Its purpose is to partially seal the grain of woods of different density so that the stain does not overemphasize the grain. Board ends, which absorb stain readily, may need extra wash coating.

G3. ***varnishing, lacquering, and painting*** - with woodworking, follow the same methods outlined in section 8D (painting). The term, top coating, is often used in the woodworking industry to differentiate between such a final coating and the staining, sealing, or filler coats. The major differences between woodwork finishing and other product finishing covered in section 8D, is that clear finishes are the norm with woodwork because of the desire to show the wood grain. Wood is also non-conductive, so that electrostatic methods of application require that the surface be made conductive with a preliminary treatment. In production situations, spraying is the primary finish application method. Both air-atomized and airless systems are used. Curtain and dip coating are also used in volume production. Roller, pad, and brush applications are used in one or few-of-a-kind custom shop situations.

Varnishes used include formulations based on polyurethane, urea formaldehyde, melamine, alkyds, phenolic, acrylic, polyester, and epoxy resins. All consist of the resin, a solvent and other ingredients. These include drying agents, plasticizers and, sometimes, colorants or "flatterers", which provide a satin finish. Others have catalysts in a separate container. Lacquers dry by evaporation of the solvent; varnishes dry partially by solvent evaporation but primarily by chemical reaction, often with the oxygen in the air or with an included chemical. Two-part varnishes, such as epoxies, have two separate liquids that are mixed just before application. These dry by polymerization of the mixed liquids. They provide tough top coatings with properties of chemical, heat, and abrasion resistance, including freedom from discoloration when water and alcohol are spilled on them. Natural varnishes using linseed or tung oil, or shellac, can make beautiful finishes but require more finishing labor and provide less protection to the underlying wood.

Often, multiple finishing coats are used to build up a thick top coating. When this is done, the dried coats are usually sanded with a fine abrasive or treated with a liquid de-glosser between coats to correct any irregularities and insure good bonding of subsequent coats.

G4. ***polishing*** - Wax polishing sometimes follows the varnish or lacquer coating to provide a deeper, richer finish. Carnuba wax, made from a Brazilian palm tree, provides very good hardness and gloss[1]. Polishes and waxes come in solid or liquid form and, in the liquid form, can be sprayed. Buffing follows the application. Manually-held electric buffing machines, robotically-controlled machines, and dedicated special machines may be used, depending primarily on the level of production of the product.

When eggshell, matt or semi-matt finishes are wanted, the required effect is often achieved by using varnishes with additives that provide the desired surface finish. Such finishes are also produced by buffing a gloss finish with a suitable compound. The best results with eggshell finishes is achieved with this method. Pumice is a typical abrasive.

H. Upholstery

Production of cushioned furniture, is largely by assembly operations that add cushioned or other special surfaces to wooden or metal furniture. The work is most commonly performed manually with hand tools. The prime purpose of upholstery is to provide more comfortable contact surfaces for the user of the furniture. A secondary purpose is to provide greater attractiveness from a decorative or textured surface. Upholstery elements normally include the following:

1. A frame structure of the furniture. This supports the seat or other upholstered surfaces. Frames are most often made of wood, using the methods described above. Other frames are made from metal "angle iron", other structural pieces, or tubing. Frame members are welded or bolted together. (See chapters 2, 3 and 7 of this handbook.) Sometimes, upholstery frames are molded from structural foam plastics.
2. Webbing to provide a semi-resilient support for springs and cushioning.
3. Springs or other resilient materials that support soft cushioning. (See *springs* and chapter 2.) Sometimes, some organic materials with the required resiliency are used without cushioning. Examples are chair seats made from cane, reed, or rush. These materials are obtained from palm trees and other plants, primarily from the tropics, and are made into strands that are usually machine woven into webbing of an attractive pattern. The webbing is then attached to a chair frame or other surface. Such webbing is also used as a decoration on paneling or furniture doors.

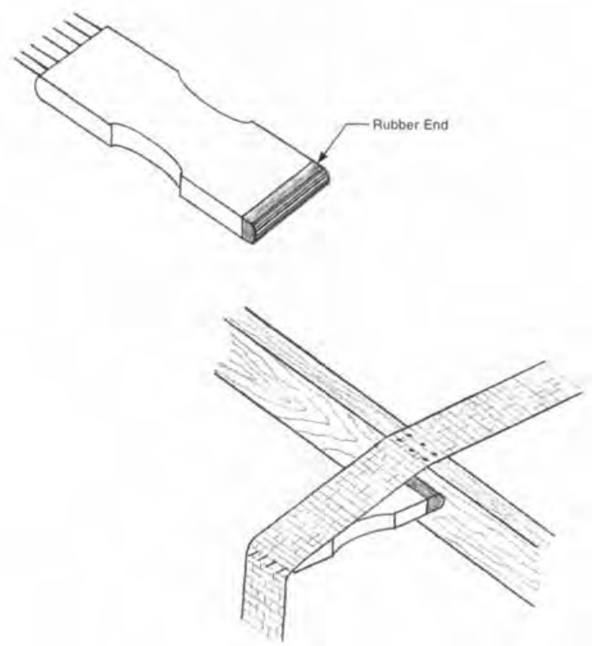

Fig. 6H1 Installing jute webbing with a webbing stretcher.

4. Padding and cushions made from a collection of organic fibers or foam rubber, or foam plastic pieces, or molded from a flexible foam plastic (See 4C3b for reaction injection molding).
5. An outer covering, sewn from an attractive woven fabric. (See chapter 10).
6. Tufting, channelling, or other shaping of the upholstery to provide a special decorative effect.

H1. ***installing webbing*** - Webbing is made from perforated or corrugated steel strip, wire mesh, or narrow strips of woven fabric. Jute is a common fiber used in woven fabric webbing. These strips are stretched tight and fastened to a wooden frame by tacking or nailing. Fig. 6H1 shows how a stretching tool is used to put tension on fabric webbing. Webbing, under the seats of upholstered furniture, is usually installed in a crisscross woven pattern as shown in Fig. 6H1-1.

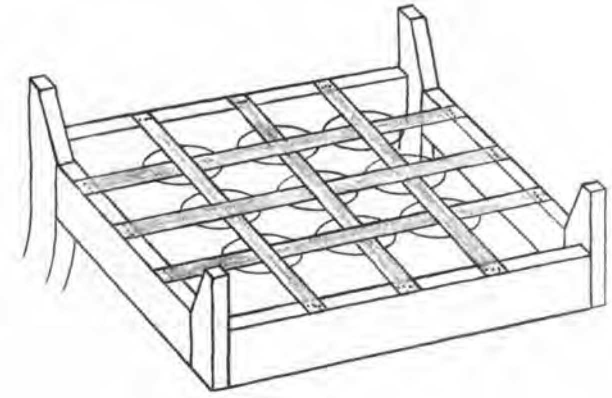

Fig. 6H1-1 The normal webbing pattern of an upholstered chair seat. Steel or fabric webbing is installed in a criss-cross weave pattern and coil springs are supported from where the webbing crosses.

H2. ***installing springs*** - Three types of springs are common in upholstered furniture: coil springs, sinuous (sagless or zig-zag) springs, and marshall units (pocket springs), which are coil springs in canvas or burlap bags. The coil springs are used for seats, seat backs, and cushions. Sinuous springs are used when a low profile is desired. Marshall units are pre-assembled as complete rows or sets, ready for installation in seats, seat backs, or cushions. Fig. 6H2 illustrates the three types of springs. Coil springs and marshall units are fastened to fabric webbing with stitching twine. Hand needles are used to stitch the twine into the webbing and to tie knots to hold the coil spring. With metal webbing, the springs are held with twisted wire or corrugations, and slots in the webbing. Coil springs are positioned at the intersection of two strips of webbing. The coil springs are tied together at their other ends with additional twine and standard knots. The tying arrangements are made to insure that the coils do not fall over and that the spring action is in the right direction. A layer of burlap may be placed over the coil springs and attached by stitching.

Sinuous springs are attached to furniture frames with metal stampings that retain the spring wire. They include holes or slots through which nails or other fasteners to the frame can be driven. Sinuous springs are placed with a slight upwardly-curved surface. Small coil extension springs connect spring strips to one another and to side rails of the furniture frame. Marshall units are attached by stitching their burlap or muslin covering to the webbing and frame. Wire hog rings are sometimes used instead of stitching twine.

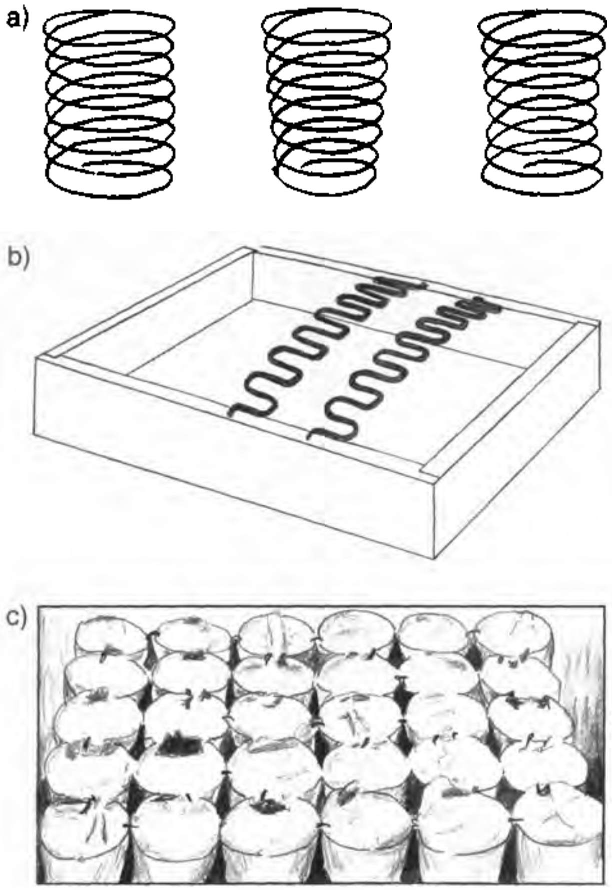

Fig. 6H2 Three types of upholstery springs: a) coil springs, of three different shapes, b) sinuous springs, being installed in a chair seat, c) marshall units, attached coil springs covered with burlap or other fabric as a subassembly.

H3. ***installing padding and cushioning*** - Padding and cushioning materials include sisal (fibers from the leaves of the hemp plant, sometimes rubberized); animal hair, curled by soaking in hot water and then rubberized; foam plastics or rubber; and cotton and polyester fibers. Fiber materials are gathered together in masses of the desired size and thickness. They are usually covered with fabric and fastened in place by tacking, stitching, or adhesive bonding.

H4. ***installing covering*** - Some furniture has two layers of covering over the padding, springs, and structure. An unbleached muslin layer provides strength to hold the cushioning materials in place and the final cover provides decoration and a durable surface. These covers are sewn with typical needle-trade techniques (as described in Chapter 10) with piping, pleats, and blind stitches suited to the styling intended. The pre-sewn cover is slipped over the furniture piece and may be tacked to the frame or stitched in place in certain areas so that it is held as needed.

H5. ***cushions, channeling, and tufting*** - The typical construction of an inner spring cushion is shown in Fig. 6H5. Channels (fluting or piping) and tufting are created by incorporating padding within two layers of the sewn final cover.

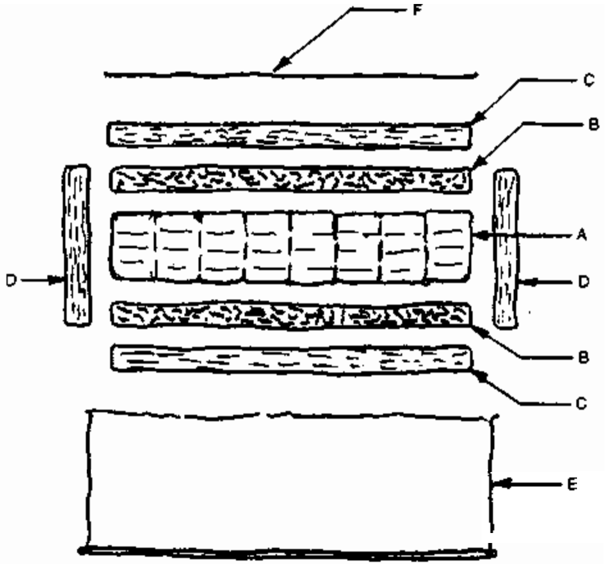

Fig. 6H5 Components of an innerspring cushion: A - marshall unit - coil springs fastened together and covered with burlap or other fabric, B - rubberized hair mat, above and below the marshall unit, C - resilient mat of polyester fibers, above and below the rubberized hair mats, D - resilient mats of polyester fibers on all four sides, E - bottom and side covers of upholstery fabric, sewn into a box shape, F - top cover of upholstery fabric to be sewn to complete the fabric cover of the cushion.1

Bibliography

1. *The Encyclopedia of Furniture Making,* Ernest Joyce, Drake Publications, London and New York, 1970.
2. *Modern Cabinetmaking,* William D. Umstattd, Goodheart-Willcox Co., Inc., South Holland, IL, 1990.
3. *The Art of Woodworking—Cabinet Making,* Time-Life Books, Alexandria, VA, 1992.
4. *Upholstering methods,* Fred W. Zimmerman, The Goodheart-Wilcox Company, Inc., South Holland, IL, 1992.
5. *Understanding Wood,* R. Bruce Hoadley, The Taunton Press, Inc., Newtown, CT, 2000.
6. *Woodworker's Handbook,* Roger Cliffe, Sterling Publishing Co., Inc., New York NY, 1990.

Chapter 7 - Assembly and Fusion (or Joining) Processes

A. Soldering and Brazing

Soldering and brazing are closely related methods for joining separate components. In both cases, a filler metal that melts at a lower temperature than the melting or maximum exposure temperature of the pieces to be joined, "wets" the surfaces to be joined and, when it solidifies, provides a solid mechanical or metallurgical bond between the pieces. In soldering, the filler metal has a liquidus (melting point) below 800°F (425°C). Common solders are alloys of tin and lead. Antimony and silver are also included in some solders in lesser percentages. Relative solderability of base metals in descending order is as follows: tin, gold, silver, copper, brass or bronze, lead, nickel, zinc, iron, steel, stainless steel, chromium, and aluminum. Solder joints are made to provide an electrical connection (the prime current application), to provide a seal, to provide a mechanical joint between parts (although the strength of soldered joints is usually inferior to those that are brazed or welded), or to aid in heat transfer between the parts being joined.

In brazing, the liquidus of the filler metal is above 800°F (425°C). Common brazing alloys utilize silver or copper as the major element. Phosphorus, silicon and aluminum are other alloying ingredients. Brazed joints are made for the same purposes as soldered joints but the prime application is to provide a strong mechanical assembly of separate pieces. Brazing may be an economical method for fabricating complex or bulky components including those composed of parts made with different processes or of dissimilar materials.

Soldering and brazing operations consist of six basic steps: 1) A cleaning operation almost always must precede soldering or brazing. The purpose is to remove oils, dirt, and other contaminants that would prevent the surfaces from being wetted by the filler alloy. (2) A flux is applied to the surfaces to be joined or an inert or reducing atmosphere is made to surround the joint to prevent oxidation, which would inhibit or prevent the surface wetting. 3) The joint members are both heated to a temperature above the melting temperature of the filler metal. 4) Filler metal is introduced to the joint where it melts and flows into the joint interstices by capillary action. 5) The joint cools and the filler metal solidifies. 6) Excess flux, if used, is cleaned from the joint area since it could otherwise cause corrosion or other adverse effects.

A1. *solder application methods*

A1a. ***wire or rod soldering*** - Solder, in wire form, provides easy application in repair, touch-up and low-quantity production operations. The end of the wire solder is touched to the heated joint at the opening between the pieces to be joined. The solder melts and capillary action draws it into the joint opening. The wire solder frequently has a hollow core containing flux. For heavier work, such as plumbing joints, the solder may be in rod rather than wire form. In these cases, flux is not contained in the rod and is applied as a separate step before the workpieces are heated.

A1b. ***preform soldering*** - Solder preforms are parts made of solder alloy in particular shapes for insertion in the joints to be soldered. For production applications, it may be advisable to make solder preforms to provide exactly the amount of solder needed and to preposition them in the ideal locations in the joints being soldered. Rings, washers, spheres, and tubes are the most common preform shapes but special shapes can be made by processing solder alloys with conventional metal forming methods. Some preforms are made with flux incorporated. The preform is placed in the joint and, when the joint is heated, it melts and flows into the space within the joint.

A1b1. ***how solder preforms are made*** - Solder preforms are made with the standard methods for formed metal parts described in chapter 2. The exact sequence depends on the shape, size, and flux coverage of the particular preform. However, the following can be considered a typical operation sequence: 1) the solder alloy required is cast into an extrusion slug. 2) the slug as extruded as a round rod or wire or with whatever cross section is needed. If the shape is round, it may be extruded with a flux core. 3) If the desired preform is small, the rod or wire may be drawn to a smaller diameter. The flux core, if any, is correspondingly reduced in size. 4) Many preforms are made from flat stock. If so, the rod or wire is passed between paired pressure rollers, which change the shape from round to flat. 5) A common shape required is that of a round washer. A punch press operation then blanks a washer shape from the flattened stock. If the wire used is flux cored, the washer will also contain the necessary flux. Blanking, then, may be the final operation. However, any shape desired may be blanked from the flat stock. 6) If the preform is not flux cored, but a flux coating is wanted, the next operation is to spray a batch of the preforms with liquid flux while the preforms tumble in a barrel. When the sprayed flux coating has dried, the preforms are ready for inspection and shipment to the customer. Other preform shapes are made with common metal forming operations.

A1c. ***solder paste soldering*** - Solder pastes are homogeneous mixtures of finely powdered solder alloy, flux, and other ingredients in paste form. Plumbers' paste is used in joining copper tubing but, by far, the most common applications for solder paste involve the attachment of electronic devices to printed circuit boards. (See 13B2, 13B2b, and 13C6 for printed circuit board use of solder paste.) In plumbing applications, the paste is applied by brush or other dispensers to the tubing or fittings in the areas where they join. When the parts are assembled and heated, usually by torch, the solder in the paste melts and wets the joint.

A1d. ***Dip soldering (DS)*** - involves immersion of the joint into a bath of molten solder. The joint is cleaned and fluxed prior to immersion. The operation is rapid; heating and solder application take place at the same time. Solder flows into the joint by capillary action but does not wet unfluxed areas. The workpieces to be joined may be held by fixtures, which insure correct final dimensions and maintain proper joint clearances. Larger workpieces may be preheated prior to the operation to provide faster soldering and to avoid overcooling the solder bath. Common applications are the soldering of electronic assemblies including printed circuit boards (wave and drag soldering described below are dip soldering methods), electrical wires twisted together, or the "tinning" of wire ends prior to their being soldered to other components. Tinning facilitates the soldering operation. Another major application is the soldering of automotive radiators. The process is also useful for assembling small parts and can be an economical method when production quantities are limited.

A1e. ***wave soldering*** - is similar to dip soldering except that the liquid solder is lifted as a standing wave that contacts the joints to be soldered. Wave soldering is used extensively in the electronics industry to make connections on printed circuit boards. It is explained and illustrated in 13C5.

A1f. ***drag soldering*** - is another method used to solder circuit board connections in the electronics industry. It is an automatic soldering method wherein the workpiece joint is pulled through a static bath of molten solder. Circuit boards are held so that just the underside contacts the molten solder. Dross is automatically skimmed from the surface of the solder periodically, or as each circuit board is processed. Section 13C4 describes and illustrates this method.

A1g. ***ultrasonic soldering*** - is primarily a variation of dip soldering. The solder bath is subjected to high frequency vibration from ultrasonic transducers. The vibration removes oxides from the surface of non-ferrous metals and promotes metallurgical bonding of the solder. Flux is not required, so cleaning after soldering is also not necessary. This approach is particularly useful with aluminum and also with stainless steel, glass and ceramics. Wire tinning is a common application. Ultrasonic energy can also be applied to a soldering iron when hand soldering aluminum, or can be applied to a surface being rubbed while solder is flowed onto it. In both these methods, the ultrasonic vibration breaks up surface oxides and allows the solder to wet the surface of the workpiece. Fig. 7A1g shows ultrasonic soldering of aluminum heat-exchanger tubing.

A2. *workpiece heating methods*

A2a. ***with soldering iron (INS)*** - Soldering irons are solid copper hand tools, nickel or iron plated, heated electrically or by immersion in a gas flame. Contact between the iron and the base materials conducts heat to the latter so that solder in contact with them will melt and flow into the joint. (Proper technique involves application of heat to the base materials rather than to the solder. The base material must be above the melting point of the solder if the solder is to flow properly into the joint and wet the surfaces.) Soldering irons are useful for prototypes and limited production, and light work such as wiring connections and printed circuit board touch up or repair. Large irons are used for sheet metal work.

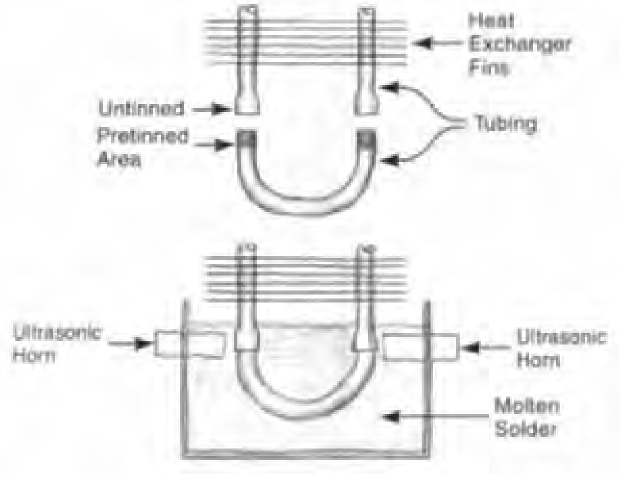

Fig. 7A1g Ultrasonic soldering of return bends of an aluminum heat-exchanger assembly. Ultrasonic vibrations from the horns, transmitted to the molten solder, break up oxide coatings on the surface of the aluminum tubing and enable the solder to wet the surface without the use of flux.

A2b. ***with gas torch*** - An oxygas torch can be used to heat the workpieces to be joined. One common application is the joining of copper tubing and fittings. The tubing and fittings are heated by torch and the solder then melts and flows into the joint spaces by capillary attraction.

A2c. ***oven or furnace heating*** - Several methods are used: circulated air, infrared lamps, electric elements. An inert or reducing atmosphere may be introduced into the oven to facilitate the operation. Conveyorized pass-through ovens can be used for high production applications. Infrared oven heating is widely used for reflow soldering of electronic printed circuit boards and is covered in section 13C6a.

A2d. ***selective infrared heating*** - Infrared light can be focused onto very small areas, so the heated area can be limited to the area of the joint. It is not necessary to place the assembly in an oven.

A2e. ***vapor-phase heating*** - is a method used to "reflow" solder paste deposits on electronic printed circuit boards. See section 13C6b for a description of the process.

A2f. ***Resistance heating (RS)*** - uses the electrical resistance of the workpieces themselves to provide the heat required for soldering. Metal or carbon electrodes, carrying a low-voltage, high amperage current, are attached or clamped to the workpieces or brought in contact with them. The workpieces are usually preassembled with a solder preform and flux or solder paste prior to heating. One common method is to have one part of the assembly clamped to a grounded fixture. The other electrode then can be manually brought in contact with the other part. The heating operation is usually quick. The manually held electrode is lifted from the workpiece by the operator when the parts become hot and the solder starts to flow. Other systems use clamped parts and a manual, timed, or automatic switch. Shut-off can be made automatic with a circuit that senses the drop in electrical resistance when the melting solder wets the parts and improves the conductivity between them. Resistance heating is suitable for higher production levels and is particularly useable when other methods of heating are less workable due to inaccessibility of the joint or the need to avoid overheating other parts of the assembly. If the dimensions of the parts to be joined and their resulting electrical resistance vary somewhat, the process will be more difficult to control. In such situations, the process is limited to less critical applications.

A2g. ***laser heating*** - provides very rapid, extremely localized heating. Its principal soldering use is in the reflow soldering of electronic printed circuit boards. The method is described in section 13C6c.

A2h. ***induction heating*** - generates heat in the joint from its electrical resistance to induced eddy currents. Eddy currents are induced in the joint by high-frequency alternating current in a coil adjacent to or surrounding the joint. The amount of heat generated depends on the amount of electrical power in the coil, the magnetic properties of the workpiece material and how well the coil and workpiece are electromagnetically "coupled". The advantages of induction heating are its speed and the fact that the heat is localized in the joint area. The joint is preassembled prior to induction heating, and solder paste or preforms and flux are included in the assembly. Fixturing, either external or by self-fixturing parts, is required to hold the joint in the desired arrangement and the induction coil must be fabricated to fit the shape of the joint. A certain amount of development may be needed to insure good coupling between the coil and the joint to insure proper energy transfer. Because of the cost of these factors, moderate or high levels of production are required for economic operation. However the operation, once established provides very good repeatability and low unit costs. Robotic and other automatic operation can be developed if quantities are sufficiently large to justify the investment required. Typical soldering applications are: fittings for tubing and hose, container seals, and complex machine components where the strength requirements are modest enough to allow use of solder as a filler metal. Induction heating is more commonly used as a heating means for brazing than for soldering. Heating for localized heat treating is another application. Fig. 7A2h shows a typical arrangement of induction coil and workpieces.

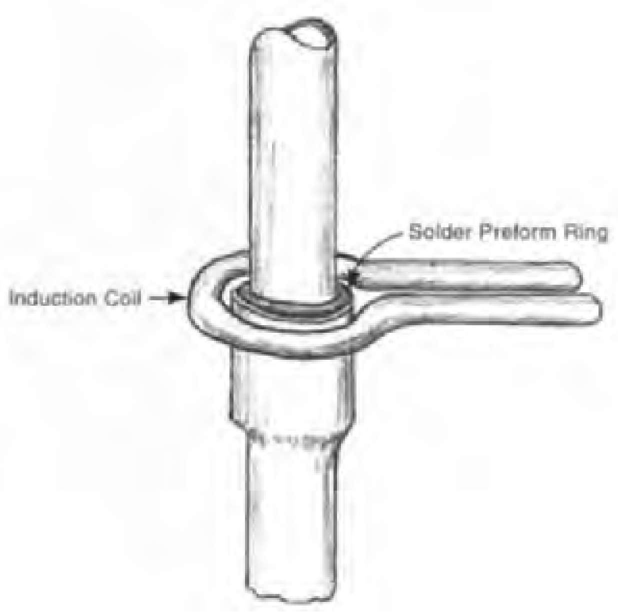

Fig. 7A2h Arrangement for induction heating to melt a solder preform in the joining of two pieces of metal tubing.

A2i. ***hot gas*** - Hot gas soldering is a technique used in the electronics industry for repair operations. It uses a stream of hot gas to provide localized heating of joints that require rework. See section 13C7.

A3. ***fluxes*** - All soldering, brazing and welding requires a clean metal-to-metal contact in order to produce a satisfactory joint. Oxides and other coatings on metal surfaces prevent this contact. Oxidation and other surface tarnishing are very likely at the elevated temperatures required in these metal joining operations. Fluxes are used to prevent and remove such surface coatings and to shield the metal surfaces so tarnishing does not reform. Fluxes also have another function; they provide greater fluidity (spreading and surface wetting) of the filler metal used. Fluxes may be in gaseous, liquid, or solid form, but solids, pastes, and liquids are the common forms.

Welding fluxes are included in the electrode coating or core of flux-bearing welding wire and include calcium carbonate, fluorspar, dolomite, and sodium silicate that produce shielding gas or shielding slag as well as fluxing action. Welding processes may use inert gases - usually argon - to shield the molten metal from formation of oxides and other unwanted compounds.

In brazing, combinations of borax, borates, boric acid, fluorides, chlorides, and fluoborates are used as fluxes. The most active soldering fluxes include inorganic acids and inorganic chlorides used in structural soldering applications, and hydrogen and hydrogen-chloride gases used in transistor manufacture[6]. Less active soldering fluxes are organic acids and halogens. Rosin, a derivative of pine sap, is a natural mild flux. It is inactive at normal temperatures but provides fluxing action when heated to above its melting temperature. Rosin is used in electronic soldering applications, though less extensively than previously. Almost all commercial fluxes are mixtures of several materials to provide the desired properties. Solvents, viscosity modifiers, combinations of active ingredients, surfactants, and other additives may be included. These ingredients are processed to a blended mixture in mixing equipment of the type described in 11G with the choice of mixing equipment dependent on whether the materials are solid or liquid and, if liquid, the viscosity involved. (See 13C1 for flux application in electronics manufacture.)

B. Brazing

B1. ***application of filler metal*** - While brazing alloy in wire or rod form can be fed into the joint by hand - and is commonly done so in repair, prototype, and limited-quantity production - in production situations, the filler metal is more often pre-placed in the assembly before heating takes place. Unless an atmosphere furnace is used for the heating phase, flux is also applied during the preassembly. The preassembled filler metal can be a preform - a ring, washer, shim, or other shape that fits the joint to be brazed - or can be in the form of a clad or electroplated coating of brazing alloy, or a paste applied to the joint. If paste is used, it contains both the brazing alloy in powdered form and the flux. Proper joint design is important so that the filler metal can fill the joint by capillary action. It is desirable to stake, press fit, or otherwise fasten the parts together before brazing, with sufficient strength so that the heat of brazing or handling prior to heating does not cause the parts to separate. If fastening is not feasible, a fixture to hold the parts during the brazing operation may be required.

B2. ***torch brazing*** - as in gas torch soldering, the flame from the combustion of a fuel gas provides the necessary heat. Either oxygen or air is mixed with the fuel gas (propane, acetylene, or natural gas). A torch, often hand-held, directs the flame and heat to the joint to be brazed. This approach is versatile, being applicable to assemblies of various sizes and to various production quantities, especially lower-volume production. The heat is directed at the joint and the entire assembly does not need to be heated. Brazing alloy is either prepositioned before heating or is fed in the form of rod or wire as the joint members reach the melting point of the brazing alloy. As in soldering, the process involves heating the joint members rather than the brazing alloy. When the joint members reach the desired temperature, the brazing alloy (filler metal) is heated by conduction. Because the operation takes place in regular atmosphere, flux must be applied to the joint area to prevent oxidation, and the flux must be cleaned from the assembly after the brazing operation is completed. Equipment costs are very low but operator skill is required for best results. Sometimes, multiple torches can be used and the torch movement and operation can be made automatic. Torch brazing is used to join copper and steel tubing in the refrigeration, air conditioning, and heating industries. Bicycle frames, furniture, carbide cutting tool inserts, and automotive components, are examples of components that are frequently torch brazed.

B3. ***furnace brazing*** - Atmosphere and vacuum furnaces can be used to supply the heat necessary for brazing. Parts are cleaned beforehand and assembled with the filler metal before entering the furnace. A fixture is often needed, but some parts are self-fixturing. The process is suitable for mass production, particularly when a conveyorized arrangement is employed. Box (batch) furnaces are also common and may incorporate the use of a retort to insure that the atmosphere is correct. The atmosphere, if not a vacuum, may be reducing or inert. Common gases are dry hydrogen, dissociated ammonia, nitrogen and argon. The furnace temperature is typically 100 to 150°F (55 to 85°C) above the melting point of the brazing alloy. The heating rate, temperature, time, and cooling rate can all be controlled closely with excellent repeatability. Little operator skill is needed once the set up is correct. A reducing or neutral atmosphere eliminates the need for flux. Other advantages are that multiple joints can be brazed simultaneously and distortion is at a minimum since the whole part is heated. There is also no flux entrapment since none is used. However the initial investment is higher and the heating cost is higher than with other processes. The process is used to braze jet engine parts, vacuum devices and automotive components.

B4. ***Induction brazing (IB)*** - is the same process described above in paragraph A2h but applied to brazing alloys rather than solders. It is used when the assembly has a shape to lend itself to placement of induction coils and when high-strength, heat-resistant joints are needed. The technique is widely used in brazing and is well adapted to brazing alloys except those that are in the high range of melting temperatures. Filler metal can be fed by the operator but is more commonly prepositioned before the induction heating operation. Flux is normally required though some induction brazing is done in a protective atmosphere. The process has the same advantages for brazed joints as for soldered joints: localized heating, fast process time, accurate control of heat, and uniform results with less need for operator skill. However, unique coils are usually needed for each assembly and development of the right coupling between the coil and workpiece may take some development. Induction brazing is used for aerospace components, appliance assemblies, industrial equipment, hand and machine tools, and hose and tubing fittings. Fig. 7A2h is also illustrative of brazing applications.

B5. ***dip brazing*** - similar to dip soldering. The assembly or the joint is immersed in molten filler metal, which is covered by a layer of molten flux. Filler metal flows into the joint but also will coat other portions of the workpieces immersed in the bath. Primarily for this reason, the process is not widely used. The method normally is restricted to small assemblies and only some brazing alloys.

B6. ***salt bath brazing*** - The parts to be brazed are immersed in a bath of molten salt that is maintained at a temperature slightly above the melting temperature of the filler metal. The method has a number of advantages: heating is rapid but overheating can be avoided; the bath provides protection against oxidation. Because of this, fluxing is often not required. However, fluxing agents may also be part of the salt bath. The salt bath also prevents decarburization of the workpiece (though it can occur after the workpiece is removed from the salt bath). Preheating is advisable to prevent the salt from freezing around the joint area of a cold workpiece. Multiple joints can be salt-bath brazed in one operation. The process is also useful for hidden joints. Carburizing and cyaniding can be performed in the same salt bath. Parts must be held in fixtures or held together by other means and the filler metal must be assembled to the joint beforehand. The brazed assembly is washed afterward to remove the salts, since trapped salts cause corrosion. Salt bath brazing is used with aluminum, copper, and ferrous alloys but is especially suited to aluminum.

B7. ***Resistance brazing (RB)*** - uses resistance to electrical current in both the workpieces and the electrodes that contact them to provide the heat necessary to melt the brazing filler alloys. The parts are pressed together between two electrodes and the current flows through both the electrodes and the parts. The parts heat up and additional heat is conducted from the electrodes to the parts. The method is best adapted for lower-melting-temperature silver brazing alloys. Carbon electrodes are often used. Regular resistance welding machines can be utilized for the operation. As with other brazing operations, a flux is needed. The method can provide very rapid brazing with precise, repeatable, high quality results. Equipment is economical. However, the process is best suited for small workpieces or small joints in larger assemblies. It is used for electrical components such as cable connectors and contacts. It is not suitable for large or complex assemblies. Fig. 7B7 illustrates the process.

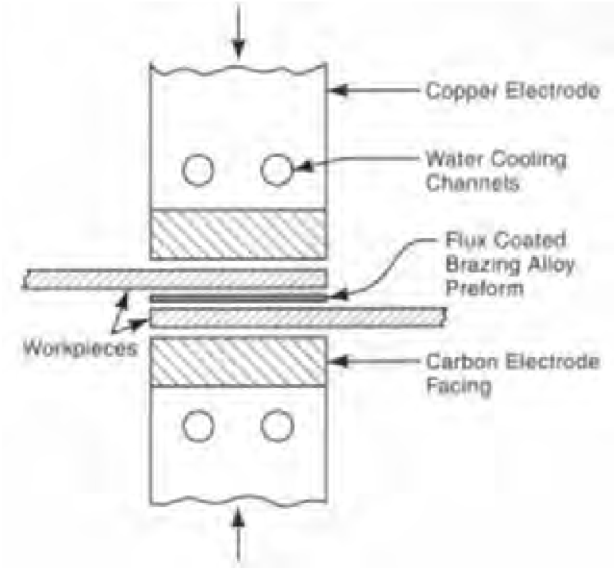

Fig. 7B7 Resistance brazing.

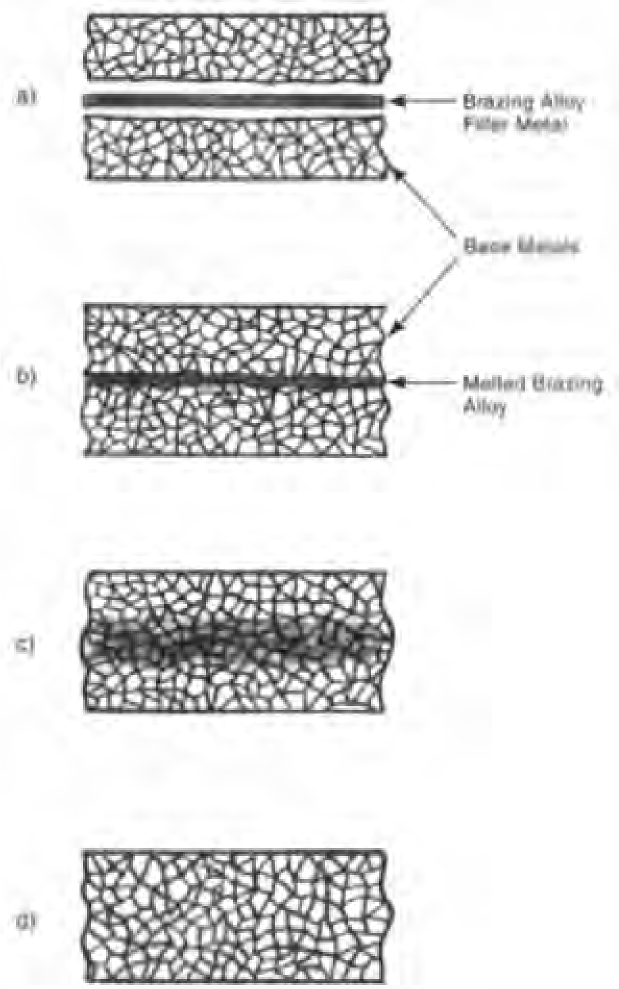

Fig. 7B8 Diffusion brazing with extensive diffusion of the brazing alloy: a) The brazing alloy is placed between two base-metal workpieces. b) Heat causes the brazing alloy to melt. c) Further heating causes the brazing alloy to diffuse into the base metals. d) After prolonged heating, the brazing alloy is fully diffused and the original junction of the two workpieces is no longer visible.

B8. ***diffusion brazing*** - is a variation of brazing in which the filler metal not only wets the surfaces to be joined but actually diffuses into them. The term *diffusion bonding* is sometimes used, although that term applies to diffusion welding also, when there is no filler metal. The process is the similar to diffusion welding as described in paragraph C13g but a foil of different material (a brazing alloy) is placed between the two surfaces of the joint. The brazing alloy melts and, under prolonged heating, diffuses extensively into the base metal. Diffusion brazing is most common when dissimilar metals are to be joined, and in the aerospace industry where it is used to bond titanium, nickel, cobalt, and aluminum alloy components. The furnace processing cycle can require from $^1/_2$ to 80 hours or more[1]. Fig. 7B8 illustrates the progression of a diffusion-brazed joint where the diffusion is extensive enough that the identity of the original joint is lost.

C. Welding

C1. *Arc welding*

C1a. ***Shielded-metal arc (SMAW)*** or ***stick welding*** - In this manual process, the electrode is in rod form and is covered with flux. The end of the electrode is drawn across the work, striking an arc, and then is held slightly above the work surface. The arc extends between the workpiece and the end of the electrode, and its heat melts both the electrode and the portion of the workpiece touched by the arc. As the electrode is consumed, its metal is added to the molten metal of the workpiece, forming the weld fillet. When the fillet cools and solidifies, the workpiece materials are joined. The process is illustrated by Fig. 7C1a.

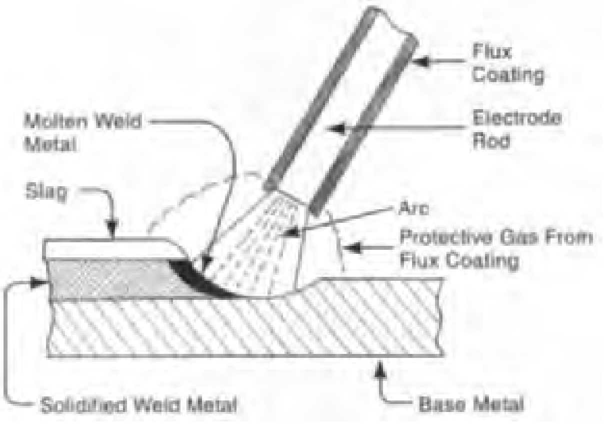

Fig. 7C1a Shielded metal arc or "stick" welding (SMAW).

C1b. ***Submerged arc welding (SAW)*** - uses granulated solid flux instead of a flux coating on the welding electrode. A thick layer of the flux covers or "submerges" the end of the electrode, the arc and the molten metal. The electrode is in wire form and is fed automatically. The dispensing of flux and movement of the welding gun are also automatic, as is the vacuum pick up of the flux granules after the weld. The process is used mainly for in-plant welding of products such as pipe or storage tanks, which have long weld seams. See Fig. 7C1b.

C1c. ***Flux-cored arc welding (FCAW)*** - In this process, the electrode is tubular and the flux is contained inside the electrode. The process thus differs from shielded-metal arc welding, which utilizes externally-coated electrodes. Otherwise, the two processes are almost the same. However, having the normally brittle flux contained inside a tubular electrode enables a coiled, continuously-fed electrode to be used, saving the time required to change welding rods.

C1d. ***Gas-metal arc welding (GMAW)*** - uses a shield of inert or non-reactive gas to prevent contamination of the workpiece and filler material. Filler material is supplied by a consumable, bare, solid wire electrode, that is fed continuously by the

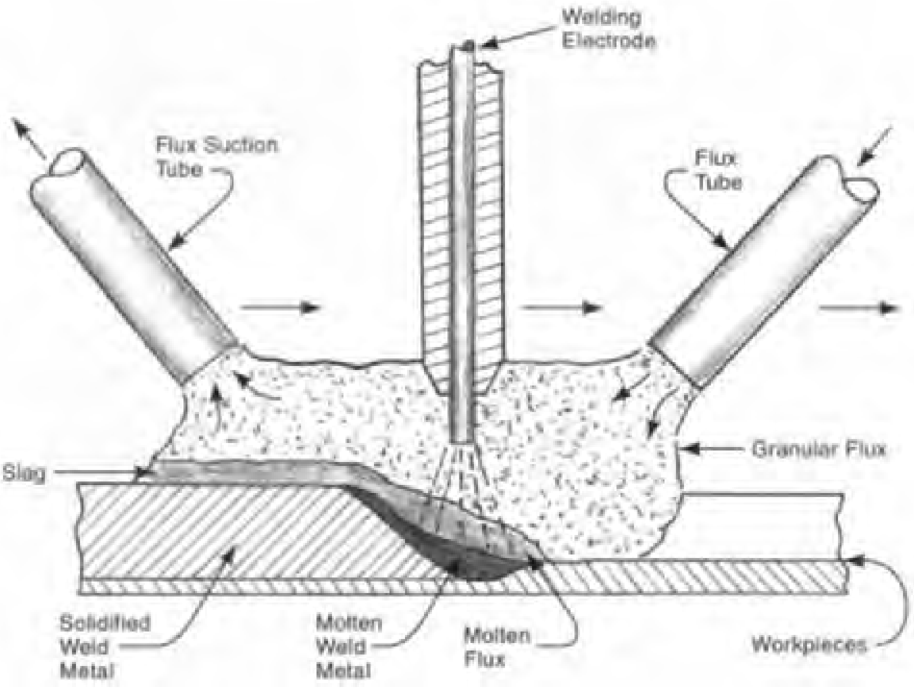

Fig. 7C1b Submerged arc welding (SAW). The weld seam is produced as the electrode and flux tubes move from left to right.

welding gun from a reel or coil as the operation proceeds. An arc between the electrode and the work provides the necessary welding heat. This method was formerly designated as metal-inert-gas (MIG) welding. Argon, helium or carbon dioxide or a mixture of them, are the most commonly used shielding gases. The shielding gas is also fed through the welding gun. The process is illustrated in Fig. 7C1d. The GMAW process is less labor intensive and faster than stick welding because welding-rod changes are not required and there is no slag to be chipped away. GMAW is used with material of 0.5 in (12 mm) or less thickness. Other processes are normally used with thicker stock. The process is widely used in production work but is less common outdoors because wind may interrupt the inert gas envelope. High quality welds on horizontal, vertical, and underside locations are feasible. Fig. 7C1d-1 shows the production GMAW welding of the mower deck for a professional riding lawn mower.

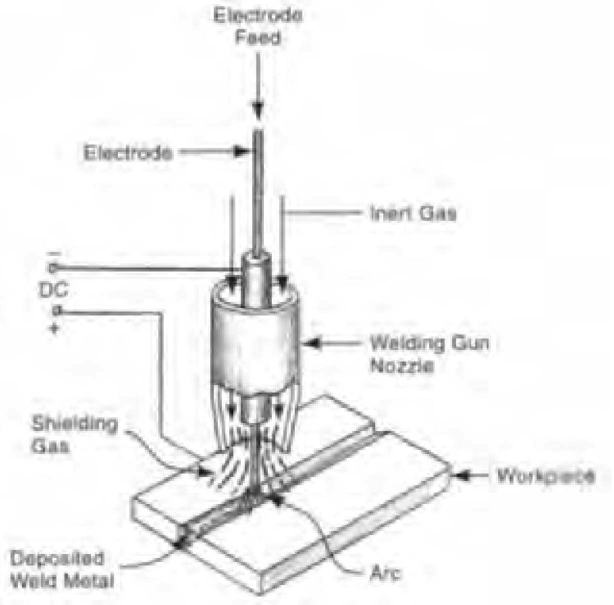

Fig. 7C1d Gas metal arc welding (GMAW).

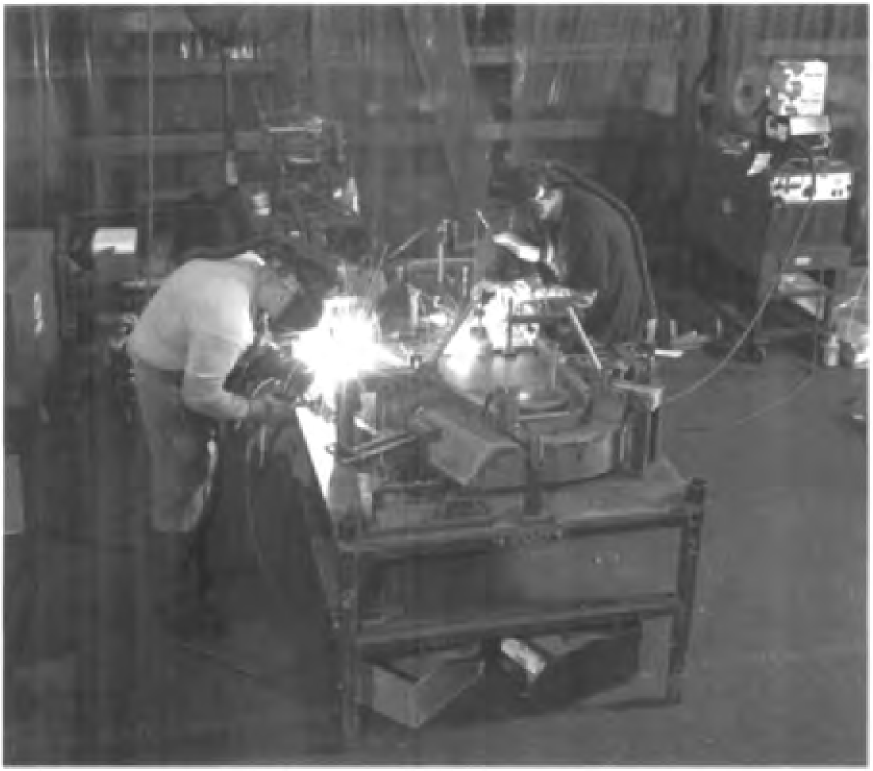

Fig. 7C1d-1 The production (GMAW) welding of the mower deck of a professional riding lawn mower. (*Courtesy the Toro Company.*)

C1e. ***Gas-tungsten arc welding (GTAW)*** - was formerly designated *tungsten-Inert gas (TIG) welding*. It is quite similar to the GMAW process. However, the tungsten electrode in the GTAW process is not consumed and does not provide filler metal. An inert gas shield (argon, helium or a mixture of the two) is used. The electrode holder is water cooled. An auxiliary rod is used if filler metal is required. High-quality, clean, slag-free welds can be produced. The process is particularly applicable to welding of closely fitting sheet metal. Sheet thicknesses down to 0.005 in (0.12 mm) can be welded. Thicknesses over 0.25 in (6 mm) usually are better welded with other methods. All metals and alloys can be welded including reactive metals and high-temperature refractory metals. See Fig. 7C1e.

C1f. ***Plasma arc welding (PAW)*** - is similar to GTAW in that a non-consumable electrode is used and there is a plasma, a zone of ionized gas. However, in plasma arc welding, the amount of ionized gas is greatly increased and the heat of welding is supplied from it more than from the arc itself. The plasma is formed by constricting the orifice of the shielding gas at the location of the arc. The plasma consists of free electrons, positive ions, and neutral particles, and has a temperature higher than that of a normal arc. The arc may exist entirely within the welding gun rather than from the electrode to the workpiece. Fig. 7C1f illustrates the process, which is used for thin-walled materials that require high-quality welds.

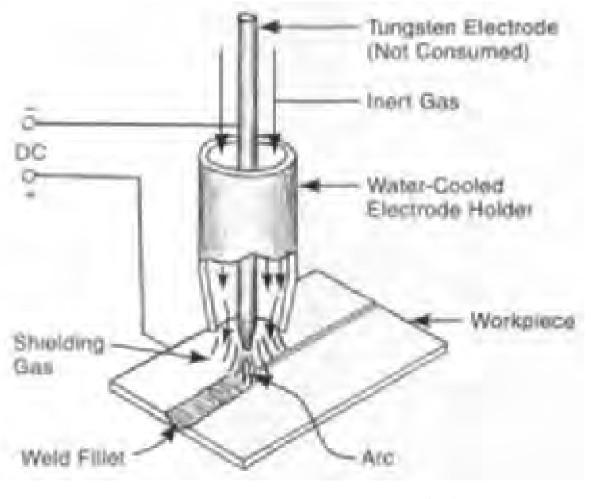

Fig. 7C1e Gas tungsten arc welding (GTAW). (Water cooling of the electrode holder is not shown.)

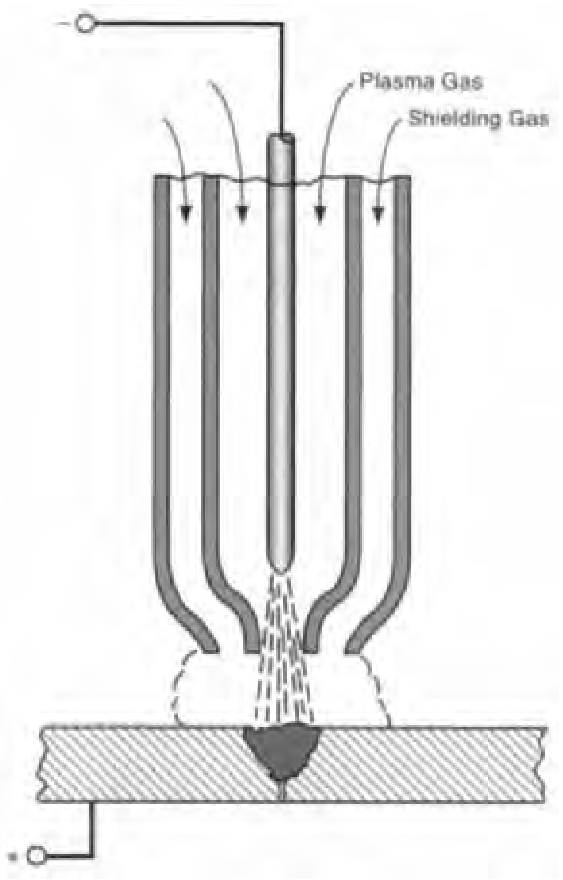

Fig. 7C1f Plasma arc welding (PAW).

C1g. ***Electroslag welding (ESW)*** - is applicable to vertical joints in thick material. After an arc is initially drawn, granular flux melts and the consumable electrode is submerged in a pool of molten flux (slag) in the space between the two parts to be joined . The resistance of the slag to the electrical current between the electrode and the workpieces heats the slag and, in-turn, the joint area. Although classified as an arc welding process, the heat for fusion really comes from the resistance of the slag to the current flow. Water-cooled copper shoes dam the molten slag and metal. The copper shoes are gradually moved upward as the welding

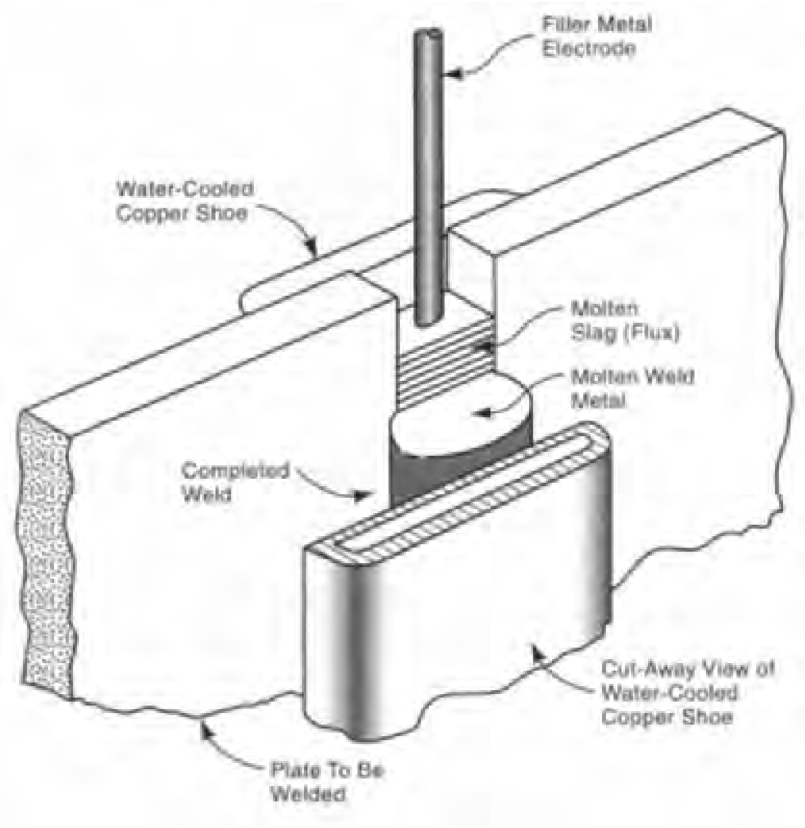

Fig. 7C1g Electroslag welding (ESW). Resistance of the molten slag (flux), to the current flowing from the electrode, melts the electrode filler metal and the plate to be welded. The operation moves upward as the metal melts and then solidifies. The copper cooling shoes move upward with the pool of molten slag.

progresses and the location of the electrode end also must be controlled. A steel tube may aid in guiding the electrode and to provide filler metal as it is consumed. Sometimes several electrodes are used to provide sufficient filler metal. The process is used extensively for welding plate 1 in (25 mm) thick and thicker, and heavy structural members. Shipbuilding, machinery, and heavy pressure vessel manufacture, and building construction are common applications. Fig. 7C1g illustrates the process.

C2. ***induction welding (electromagnetic welding)*** - Induction heating as described above (Paragraphs A2h and B4) can also be used to create sufficient heat at the joint of two workpieces to weld them together. Pressure is also often used to force the heated pieces together. Coils are designed to concentrate the heat at the edges or surfaces to be joined. Typical frequencies are 400 to 450 cps.[2] A number of ferrous and non-ferrous alloys and dissimilar metal combinations can be induction welded. Fig. 7C2 illustrates the principle when used to butt weld two sections of bar together. Other applications are the sealing of containers and the fabricating of structural sections from flat stock. Tubing and pipe, made from strip stock is also induction welded, but direct contact may be used rather than induction from a coil, to produce a high-frequency current (200,000 to 500,000 Hz) in the material. The strip is first roll formed to produce a round cross section.

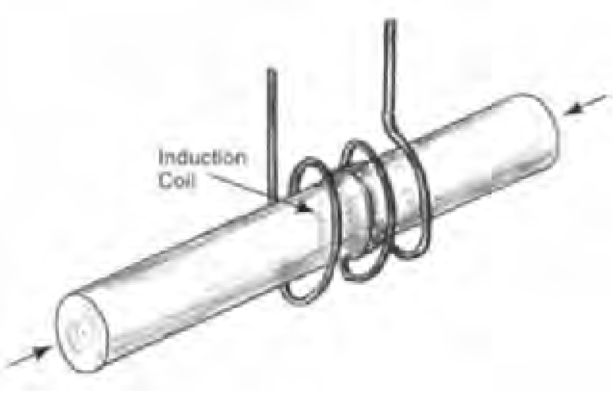

Fig. 7C2 Induction welding the ends of two metal bars together.

The edges are then heated to the high temperature to fuse the mating edges together, forming a longitudinal weld seam.

C3. ***Oxyfuel gas welding (OFW)*** - commonly known as gas welding or oxyacetylene welding, uses a stream of acetylene gas, the combustion of which, in a stream of oxygen gas, provides the heat necessary for welding. Both gases are supplied to the torch through flexible hoses. The temperature and heat concentration of OFW is less than that of arc welding processes. OFW is used for welding sheet metal parts together for such components as trays and tanks.

C4. ***Electron beam welding (EBW)*** - utilizes a narrow stream of high-velocity electrons, directed at the joint, to provide the heat of fusion. The electrons are emitted by a heated cathode and are focused and accelerated by electrostatic and magnetic elements, all in a high-vacuum chamber. The energy of the electrons striking the workpiece provides intense localized heat. The process works best when the workpiece is also in a vacuum of 10^{-4} torr, or lower. However, a less severe vacuum or even atmospheric pressure can be also used if the application permits a less focused electron beam. The process can be used for welding foils and thin sheets to heavy plates. Deep weld joint penetration is possible but the weldment must be small enough to fit into the vacuum chamber. Fig. 3N in chapter 3 illustrates an electron beam machining arrangement. When used for welding, the arrangement is very similar, differing only in that the energy is used to melt and fuse the workpiece metal rather than to remove it.

C5. ***Laser-beam welding (LBW)*** - This process uses the energy of a laser beam, an extremely concentrated beam of coherent, monochromatic (single wavelength) light, to melt the metal at a joint. A gas or solid-state laser emits pulses of coherent light that is focused to concentrate it within a very small area, providing an extreme concentration of energy (e.g., 60 kW/in^2) which melts metal in a narrow area. Penetration can be deep with a very narrow heat-affected zone and without heat distortion of the base metal. All metals can be laser-beam welded. The process is quite similar to laser-beam machining, which is discussed in chapter. 3 and illustrated in Fig. 3O. It is used for welding thin gauge parts, heat sensitive parts, and inaccessible areas. The pool of melted metal that forms the joint is very narrow. Edges to be joined must be carefully prepared to insure a narrow gap. Laser welding is extensively used to connect wire leads to small electronic devices. However, stainless steel plate up to about 3/4 in thick can be laser-beam welded.[2] The cost of laser equipment is somewhat high but much cheaper than electron beam welding equipment. A vacuum chamber is not required. Care must be taken to avoid eye injury from the scattered or reflected laser beam.

C6. ***resistance welding*** - achieves fusion from the heat generated by the resistance of the metal workpieces and the joint between them to the flow of a heavy electric current. The process is applicable when one or both of the parts to be welded is sheet metal. Electrodes supplying the current contact the work where the weld joint is to be located and apply pressure. Heat is generated in the area of contact of the workpieces; there is no external heat source. Pressure is increased when the metal softens. Fluxes and filler metals are not required. Resistance welding is rapid and the equipment required is not expensive.

C6a. ***Spot welding (RSW)*** - This resistance welding method is illustrated schematically in Fig. 7C6a. The process is widely used to join sheet metal components, usually with a series of localized "spot" welds. High electric current at low voltage is conducted by electrodes contacting and pressing on the work on opposite sides of the joint area. The current flows through the workpieces. Heat is generated by their electrical resistance, especially at the area. where they contact. The workpiece metal at the point of contact of the two pieces melts. When the current stops, the metal solidifies, forming a weld spot.

C6b. ***Seam welding (RSEW)*** - The electrodes are in the form of wheels. They press the parts together while rolling and conduct heavy current in a series of pulses. The pulses produce overlapping spot welds that provide a weld joint in the form of a seam. Vehicle gasoline tanks and other containers or ductwork where pressure tightness or fluid-carrying ability are required are a typical examples. Fig. 7C6b shows the process.

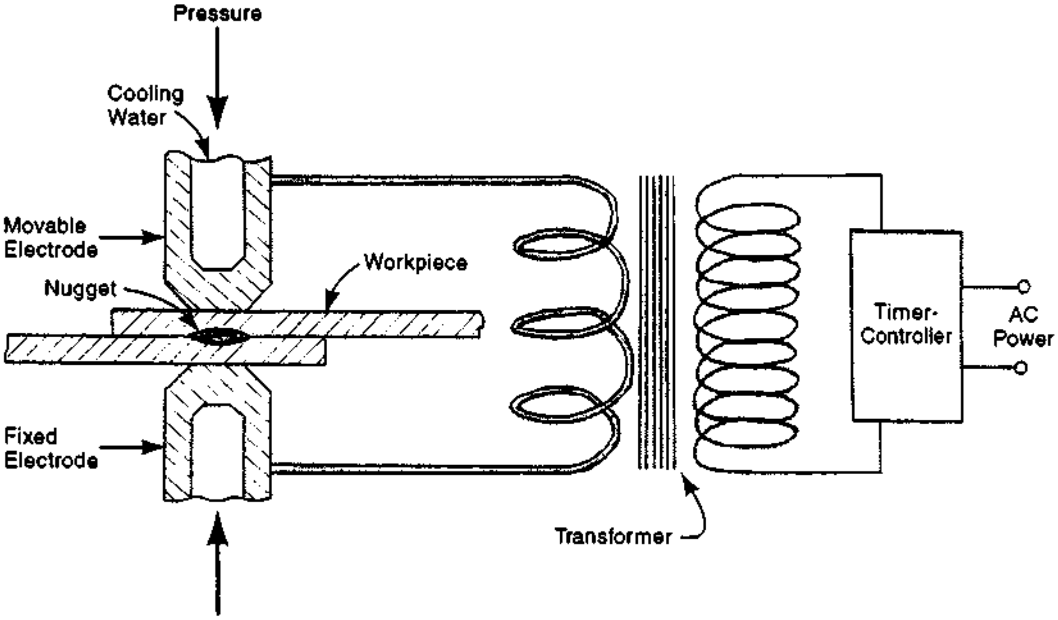

Fig. 7C6a Spot welding (RSW).

C6c. ***Projection welding (RPW)*** - uses raised elements on the workpiece surface to concentrate the electrical current and heat of resistance welding. The workpieces are pressed together by the welding equipment as in conventional resistance welding. The raised areas, projections, on one or both of the workpieces, perform the same function of concentrating the electrical current as does the localized pressure from electrodes in conventional resistance welding. Projections can consist of embossments of sheet metal parts or small raised lumps in the surfaces of castings or forgings. The projections can normally be incorporated in the tooling of the parts-making operation and thus involve little or no additional cost. They can be shaped to fit the requirements of the welded assembly and multiple projections can usually be welded at one time. An advantage of the process is that there are no surface depressions from the electrode pressure as there are in conventional spot welding. Additionally, lower current levels, less pressure, better consistency from piece to piece, and shorter welding times normally are feasible than if there were no projections and conventional spot welding were employed. Fig. 7C6c illustrates projection welding. The process is particularly applicable when production quantities are large. The process is also applicable when parts are too thick for conventional spot welding.

Fig. 7C6b Seam welding (RSEW) a vehicle fuel tank. *(Photo courtesy Acro Automation Systems, Inc.)*

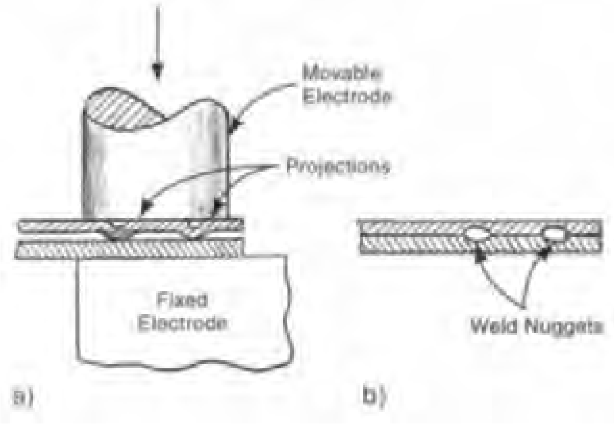

Fig. 7C6c Projection welding (RPW): a) prior to the application of pressure and electrical current. b) the completed weld.

C7. ***stitch welding*** - is seam welding with a noncontinuous seam. It is used when pressure tightness is not required and has the advantage of producing less warpage than a full seam weld. The "stitches" are produced by switching the electrical current alternately on and off as the wheel-shaped welding electrode rolls along the weld area.

C8. ***stud welding*** - is an arc welding process used to attach fasteners or studs to the surface of a metal part. The stud to be welded acts as an electrode; a direct current arc is struck between the workpiece and the end of the stud. After the arc has melted and softened sufficient metal, the parts are brought and pressed together until the weld joint has solidified. A hand gun is used to hold the stud and provide the arc and pressure required. The arc duration and current, and the pressure, are automatically controlled. The stud withdrawal to create an arc and its subsequent pressure against the mating surface are effected by mechanisms in the welding gun. The gun also includes a ceramic ferrule to confine the heat and molten metal, and to shield the operator from the arc. Shielding gas also is used for some work. Stud welding can be employed whenever some object must be fastened to a surface. Typical examples are securing fasteners for liners in boxcars, trucks and tanks, concrete anchors for structures, electrical panel covers, and fastening legs and feet to appliances and machines. Fig. 7C8 illustrates the process.

C9. ***Friction welding (FRW)*** - The frictional heat developed when one part rotates and is pressed

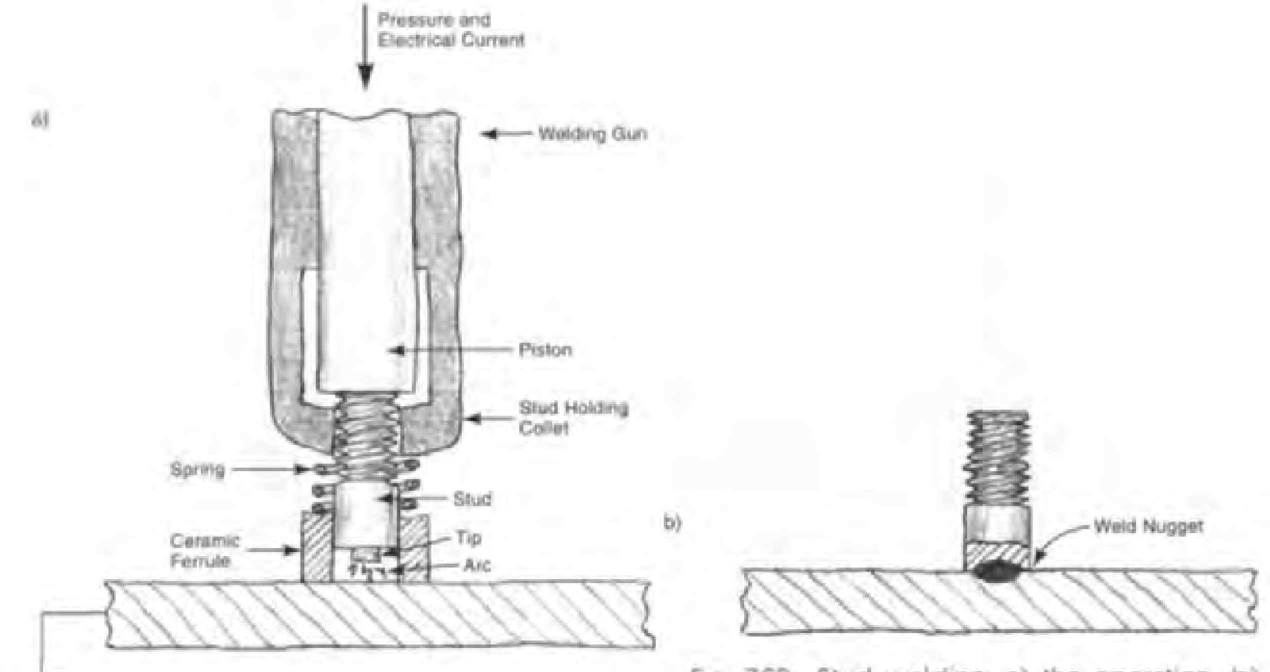

Fig. 7C8 Stud welding: a) the operation, b) section view of stud welded part.

against a stationary part can be sufficient to weld the two parts together. Typically, a lathe-like machine is used to rotate one part against a stationary part until the temperature of the interface is sufficiently high. Then the rotation is stopped and the parts are pressed more firmly together. The molten metal at the interface fuses together. When the joint has cooled, a strong weld can result. Either a strong electric motor or a flywheel is used to provide the rotational force. If a flywheel is used, the process may be called, ***inertia welding***. Rotational speed, time of rotation, and axial force must be developed for each application. The process is used to make joints between parts when at least one part can be rotated about a central axis. Pipe, bars, and other parts of circular or near-circular cross section are welded with this process.

C10. ***Flash welding (FW)*** - sometimes called ***flash butt welding*** - uses an arc between two workpieces, rather than an arc between an electrode and the workpieces, to provide the necessary heat for welding. The parts to be welded are both tightly clamped to electrical current sources. The parts are brought together with light pressure and the current is switched on. The parts are moved slightly apart so that an arc passes between them, softening and melting the metal at the interface. The parts are then pressed together with strong force. This creates the weld and upsets the metal in the joint area. Impurities are expelled in the flash. The current is shut off and the holding force is maintained until the joint metal solidifies. The process is illustrated schematically in Fig. 7C10. Preheating may be achieved in some cases by holding the parts together for a period with current flowing before the arc is struck. Extra material at the upset joint may be machined off as the application requires. The process is useful for welding tubular or solid workpieces. The process is also used in making pipe and tubing from strip stock. Non-ferrous and dissimilar metals can be flash welded. However, flash welding is not recommended for alloys containing high percentages of zinc, lead, tin, or copper.[2]

C11. ***percussive welding*** or ***percussion welding*** - is a variation of flash welding. Parts to be welded are securely held some distance apart against heavy spring pressure. When the hold is released, they move together rapidly. When the parts are about 0.060 in (1.5 mm) apart, a sudden release of electrical energy from a bank of capacitors, or from a collapsing electromagnetic field, causes a large, intensive arc to form. The arc duration is very short, only 1 to 10 milliseconds, until the parts contact one another, extinguishing the arc. The parts are then held together by the spring pressure. (In some set-ups, devices other than springs may be used to provide the movement and percussive force.) Only a small amount of metal is melted so there is little upsetting when the parts are forced together. The heat-affected zone is very small. Heat treated parts can be welded with this process without annealing.

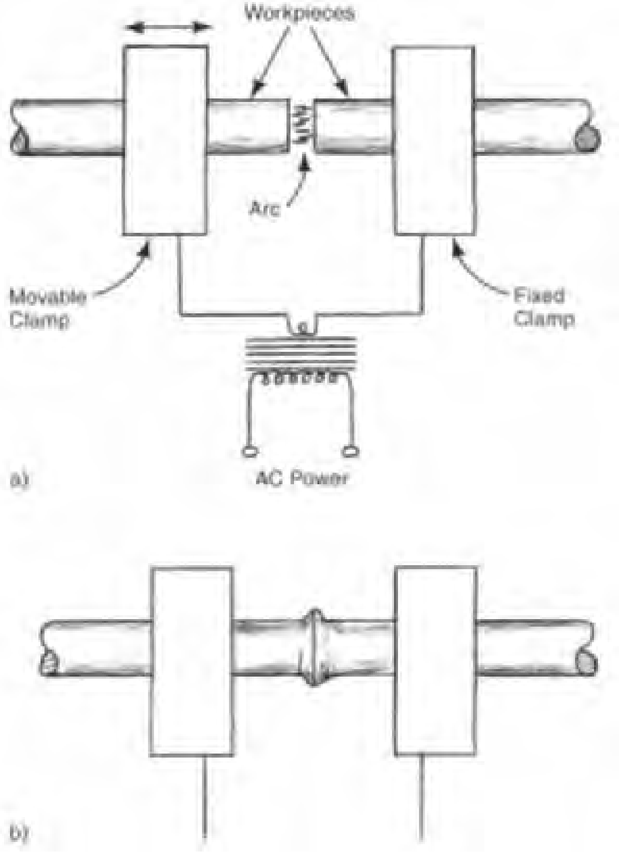

Fig. 7C10 Flash welding (FW) to join two pieces of metal rod: a) The workpieces have been moved together to touch and drawn slightly apart to create an arc which melts the metal at the ends. b) The workpieces have been pressed together; the heated metal at the joint has cooled and a finished weld results.

However, workpieces must have relatively regular joint areas of 0.5 in^2 (320 mm^2) or less. The process is used to weld electrical connections, silver contacts to copper components, carbide tool bits to tool holders and other joints of dissimilar metals. Dissimilar metals not weldable by other processes can be welded by percussive welding. Because the melting cycle is so rapid, nearby heat sensitive components are not adversely affected.

C12. ***Thermit welding (TW)*** - is an old process that can be carried out in the field without the use of conventional welding equipment on a joint up to about 10 in^2 (60 cm^2) in area. The joint is made by casting molten metal around the workpiece edges to be joined. To weld steel or iron parts, iron oxide powder is mixed with aluminum powder. The following reaction takes place after the mixture is ignited:

$$3Fe_3O_4 + 8Al \Rightarrow 4Al_2O_3 \text{ (slag)} + 9Fe$$

The iron liberated by the reaction is in liquid form and can be directed with a sand mold to act as a filler metal in a joint. Iron alloy pellets may be added to reduce the temperature of the reaction and to provide additional molten metal. The molten metal, since it is very hot, readily fuses with the workpieces. After the molten iron solidifies, the sand mold can be broken and removed. Any excess iron in the joint area can be removed by chiseling while it is still hot and soft. The process has been used to join sections of railing and reinforcing rods, and to repair large castings, in locations where conventional welding equipment is not available. However, it is no longer in widespread use, having been largely replaced by more recently developed processes. With suitable oxides, a number of nonferrous alloys can be joined by thermit welding.

C13. ***Solid-state welding (SSW)*** - There are a number of processes that metallurgically join two workpieces without creation of a liquid phase:

C13a. ***forge welding*** - is an old process, originally performed by blacksmiths who, with borax, fluxed the joint areas of the parts to be welded, heated them to forging temperature and, with a series of hammer strokes, forced them together. Hammer strokes were normally started in the center of the joint and moved outward to force any scale out of the joint. When done correctly, the metals of each part would weld together, forming a strong bond. The process is currently little used today except in the forge-seam welding of pipe.

C13b. ***forge-seam welding*** - The forge welding process is now used to make pipe from strip steel material. The material is heated, formed into a cylinder and, while the edges are at forging temperature, they are forced together under the pressure of rolls or a die. See *pipe, metal* and Fig. P2.

C13c. ***cold welding*** - is, by definition, the solid state joining of metal components through the application of pressure without the application of heat from external sources. The operation takes place at or near room temperature. Surfaces must be reasonably clean before the operation; wire brushing is one cleaning method used. The joint area is subjected to localized pressure. In sheet materials, when the joint thickness is reduced by about 50 percent from the external pressure, welding takes place. One or both of the materials being joined must be ductile for the process to work satisfactorily. The process is most frequently used for small parts and electrical connections. Copper, aluminum, lead, nickel, zinc, and Monel are suitable for the method. The process is shown schematically in Fig. 7C13c.

C13d - ***metal cladding*** - is the joining of two or more sheets of different materials to produce one sheet with improved properties. It is carried out to provide corrosion resistance, improved appearance, or other properties not achievable with only one metal. U.S. coins, previously solid silver alloy, are now made with nickel cladding on a copper substrate. They have similar properties to the silver coins they replace, particularly for coin-operated vending machines that are engineered to reject slugs, but at much lower cost than the silver coins. The surface metal is bonded metallurgically to the substrate material. The two prime methods for cladding, described below, are roll welding and explosive welding.

C13e. ***Roll welding (roll bonding) (ROW)*** - is a solid-state process used chiefly for metal cladding. Two or more sheets of metal are joined by

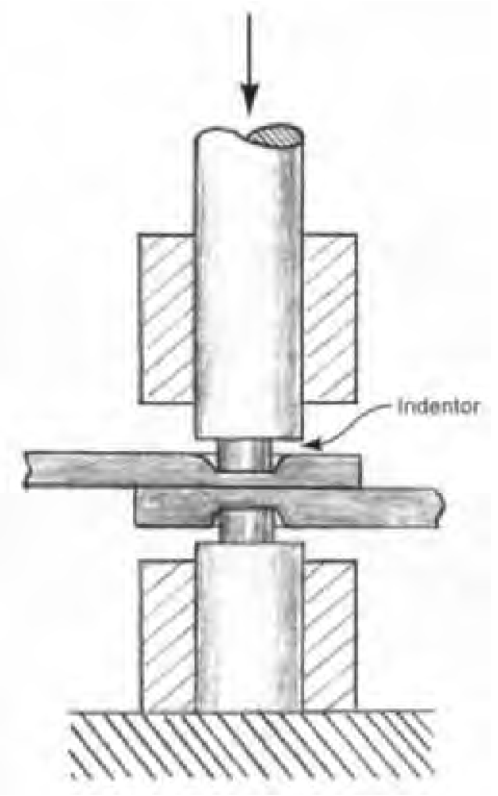

Fig. 7C13c Cold welding. Pressure from the opposing indentors deforms the workpiece metal and causes the mating surfaces to fuse together without application of heat.

passing them through pressure rollers. (Sheets must be clean before the operation.) If pressure is sufficient to reduce the thickness of the sheets, bonding between the sheets will take place. Heating may be used for some materials but is not necessary if at least one of the metals to be joined is ductile. Roll welding is applicable to sheets of the same metal and to dissimilar metals. Fig. 7C13e provides an illustration of the process. Sheets can be selectively bonded if the areas that are not to be bonded are coated with a material that prevents the bonding. Refrigerator cooling panels are made in this way. Before bonding, one sheet is coated with anti-bonding material in a pattern corresponding to the desired channels. The sheets are roll bonded together and then are heated to vaporize the anti-bonding material, The internal pressure thus generated expands the unbonded metal areas, creating channels for refrigerant to flow.

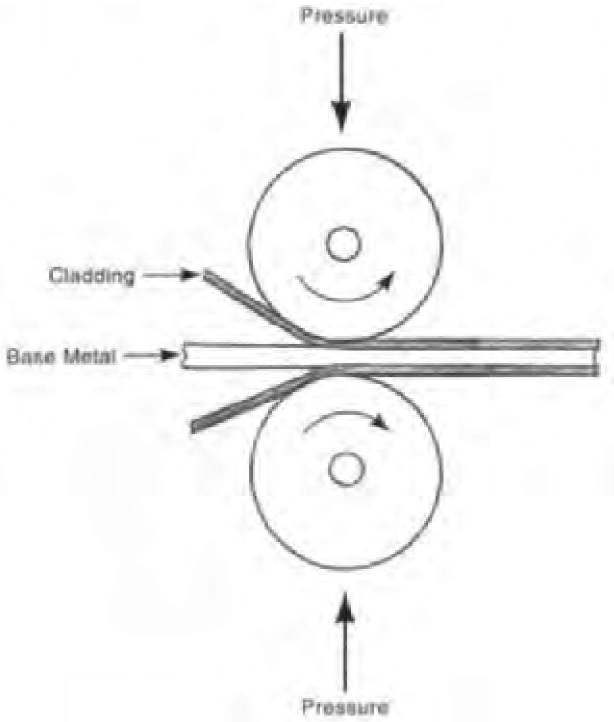

Fig. 7C13e Roll welding (roll bonding) (ROW).

C13f. ***Explosive welding (EXW)*** - is another process that relies on pressure rather than heat to join two workpieces. Explosive welding utilizes the enormous pressure resulting from the ignition of an explosive charge to cause the workpieces to bond together. There is no heat-affected zone at the joint. The process is principally used as a *metal cladding* method, to bond sheets of corrosion-resistant metal to plate material, particularly when large areas are involved. The bottom plate is placed on a solid support and the top sheet-the one to be welded to it - is placed above it at a small angle. (See Fig. 7C13f.)

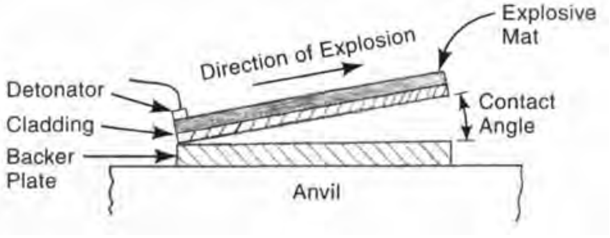

Fig. 7C13f Explosive welding (EXW). The extreme force of the explosion bonds the cladding to the plate.

Next Page

An explosive charge, in sheet form, is placed on top of the sheet material. The explosion takes place in progressively, moving across the joint from the point where the metals are in initial contact. The compressive force from the explosion amounts to several hundred thousand pounds per square inch, forcing the metals together tightly. The sweeping nature of the compressive force aids in expelling any oxides or other foreign materials on the surfaces of the joint materials. The process is well suited to the welding of dissimilar metals. The joint is normally fully as strong as the weaker of the two metals being joined. Sheets as large as 7 × 20 ft (2 × 6 m) can be welded with this method. The process is also used for the internal cladding of tubes and pressure vessels.

C13g. ***diffusion welding (diffusion bonding)*** - This process involves placing the clean, highly smooth mating surfaces of the joint in contact under moderate pressure and at elevated temperature (but below melting temperature) for a prolonged period of time. The process temperature is typically about 70% of the melting temperature - on an absolute scale - of the lower melting temperature workpiece material. The pressure causes some plastic deformation of the workpieces at the joint area, but only at a microscopic level, chiefly to ensure close metal-to-metal contact. Gas pressure is often used in the process; another method is to confine the workpieces in a container having low thermal expansion properties so that, when the workpieces are heated and expand, they are forced together. Atomic diffusion and grain migration complete the metallurgical bond. Continuous, leakproof joints can be produced without deterioration of the properties of the workpiece materials. The process is most frequently used when dissimilar metals are to be joined. Sometimes, with dissimilar metals, a thin foil of a third metal is used in between the two workpieces. When furnaces with inert or protective atmospheres are used, reactive metals - titanium, zirconium, beryllium, and high temperature refractory metals can be welded. The operation is slow, so multiple parts or joints are often welded in the same furnace batch. The operation is most applicable to low-quantity production situations. The welding of titanium airframe components is one application. Other applications are in the electronic and atomic energy industries.

C13h. ***ultrasonic welding*** (of metals) - is another solid-state process. The joint surfaces are held together under light pressure and are vibrated at a high frequency (10,000 to 200,000 Hz). The rapid vibrations, parallel to the plane of the joint surfaces, break up oxide films, bringing the metal into intimate contact. There is some heating from the friction but not enough to melt any metal. The process, which is limited to thin materials, is illustrated in Fig. 7C13h. Sheet, wire, and foil can be ultrasonically welded. Lap joints are most common. The thinner of the two sheets is limited to a thickness of about 0.125 in (3 mm) for aluminum and 0.040 in (1 mm) for steel. The process can be used to weld dissimilar metals and even metals to glass and other non-metals. Temperature-sensitive components can be welded because of the low temperatures attendant to the process. Ultrasonic welding is used to make connections to electronic microcircuits, in sealing and packaging applications, especially with foil, and in bonding refractory and reactive metals. (Note: Ultrasonic welding is also used with plastics. See 4L4 for a process description.)

C13i. ***Friction stir welding (FSW)*** - is a relatively recent development for making solid-state welds in sheet or plate material. The joint metal softens but does not melt from the operation. The method utilizes a rotating cylindrical tool that bears against the workpiece to create frictional heat. The tool incorporates both a vertical pin and a horizontal shoulder. When the tool rotates, it is pressed into the joint to be welded. The friction from the pin softens the joint metal so that the pin can penetrate. Thereafter, the tool moves horizontally as it rotates. The shoulder of the tool then generates most of the frictional heat. As the tool rotates and moves, the joint metal is deposited behind the pin where it cools to form a bond in a continuous seam. The workpieces must be securely fixtured before the operation begins so they can withstand the separation force of the tool. The process is primarily used with aluminum, but can join dissimilar alloys, some of which are not normally weldable. The heat-affected zone and workpiece distortion are less than with conventional welding because the maximum temperature is only about 80% of the

Previous Page

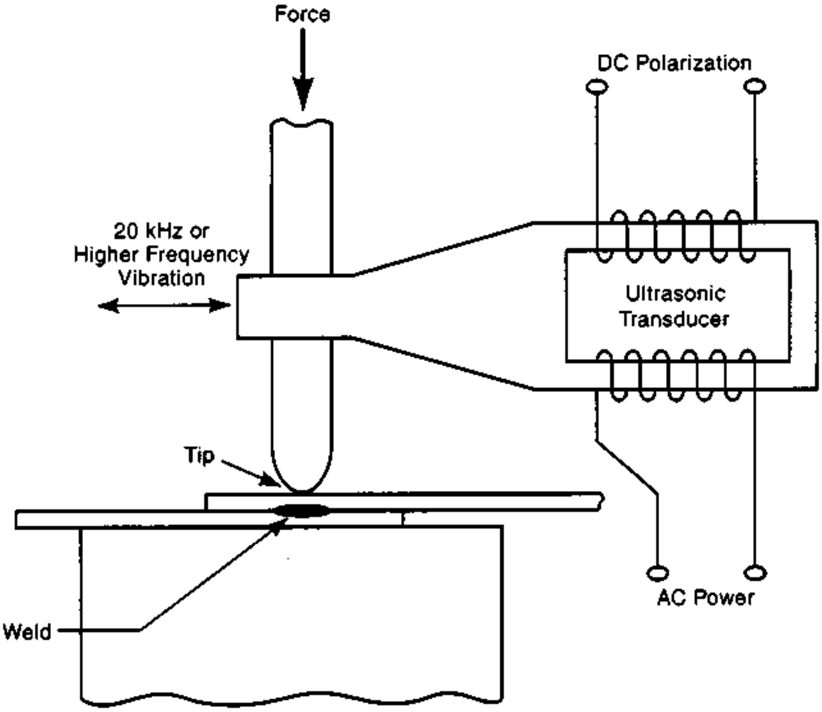

Fig. 7C13h Ultrasonic welding of sheet metal.

melting temperature of the metal. Friction stir welds are fine-grained, and superior in density (no entrapped oxides or gas), strength and fatigue resistance to arc welded joints in the same material. Normally, no filler metal or flux is consumed in the operation. Fig. 7C13i illustrates the principle and

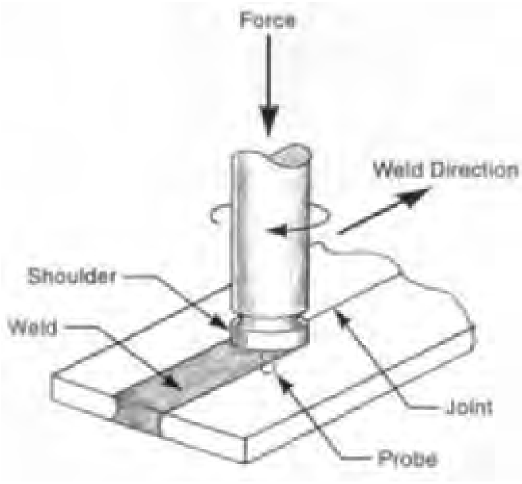

Fig. 7C13i Schematic representation of friction stir welding (FSW).

Fig. 7C13i-1 shows equipment for welding aluminum aircraft skin to frame members. Figs A4 and A5 in Chapter A show aircraft components welded by FSW. The process works best with lower-melting temperature metals and with butt joints or other simple joints. Steel can be welded by FSW with the use of shielding gas but with high tool wear.

D. Adhesive Bonding

Adhesives are materials that can hold other objects together by surface attraction between the adhesive and the workpiece material (adherend). All adhesive bonding processes have some characteristics in common, although the adhesive used and its application method may vary. Typical sequences are as follows: 1) Surface preparation: cleaning - The surfaces to be joined must be free of oils, dirt, and other contaminants. Some kind of cleaning operation is sometimes required. (See section 8 for cleaning methods.) Some surface roughening may also be advisable, and plastic adherends may require a surface ionization pretreatment. 2) Application - The adhesive is applied to one or both

Fig. 7C13i-1 Friction stir welding of aluminum aircraft skin to frame members. Note the clamping devices used to withstand the separation force of the probe of the welding tool. (*Photo courtesy Eclipse Aviation.*)

surfaces to be joined. 3) Assembly - The workpieces to be joined are assembled together and immobilized. Fixtures may be used in production situations to insure accurate placement and holding of the workpieces. Clamping may be used to hold the joined pieces together. 4) Curing - The liquid or semi-liquid adhesive becomes a solid bonding material. (Dry film or other solid adhesive first must be brought to a semi-liquid state in order to wet the joint surfaces). To be cured, the adhesive may be subjected to heat, ultraviolet, or other radiation, or may cure at room-temperature. Polymerization, some other chemical reaction, evaporation of solvent, or simple cooling may be involved in solidifying the adhesive. Clamping, if any, is then removed. 5) Excess adhesive, if any, is removed and the assembly is ready for use or further operations.

Adhesive bonding is useful when fragile or heat-sensitive materials are joined, when the weight of the assembly must be minimized, when the parts to be joined must be electrically insulated from each other, when materials dissimilar in composition, thickness, or stiffness are joined, when sealing as well as bonding are needed, and when vibration or sound dampening is desirable. However, joint strength of adhesive bonded joints may be less than with other methods, unless a large-area joint is possible. Adhesive joints are generally difficult to disassemble and operating temperatures of the joint may be limited. Some common applications are vehicle brake disc and brake band assemblies, plywood and wood furniture, helicopter blades, nameplate attachment, floor tile installation, automotive rear-view mirrors attached to windshields, skis, automotive headlight and taillight assemblies, building wall coverings and insulation, and even structural elements of aircraft. Also see *adhesives* (Chapter. A).

D1. ***surface preparation methods for adhesive bonding*** - are performed to improve or make possible the adhesion of the adhesive to the surfaces to be joined. They include various cleaning methods, and physical and chemical treatments of the surfaces.

D1a. ***cleaning*** - is performed to remove oil, grease, mold release agents, dust and other soils. Complete removal of these contaminants is necessary for best bonding results. Solvent, alkaline, and other cleaning methods described in chapter 8, section A may be used. Vapor degreasing is a preferred solvent cleaning method to avoid contamination of the solvent with oils and grease from previous operations on the workpieces.

D1b. ***surface roughening*** - Abrasive methods are used: hand or power sanding, grit blasting, grinding, or chemical etching. These convert a smooth surface to one with minute peaks and valleys and increased surface area, both of which improve the holding power of the adhesive. They also remove surface oxides that could impair bonding and are not removed by a normal cleaning process. Wire brushing may be another useful method to remove these oxides. Degreasing or other cleaning is often advisable after surface roughening to remove residual grit.

D1c. ***surface ionization pretreatment*** - Flame treatment, corona treatment, chemical etching, and plasma treatment are used to make the surface of plastic parts more adherent for bonding materials. All these processes reduce the slipperiness of plastic surfaces from their as-molded or as-extruded condition. See M1b through M1e in chapter. 4 for process descriptions. Flame treatment is used mostly with polyethylene and polypropylene materials. Corona and plasma treatments are used on plastics with low surface energy. Polyethylene and polypropylene can often be treated by applying a suitable primer instead of using flame treatment. PTFE ("Teflon"[1]), silicones and some thermoplastic elastomers also may need primer treatment to achieve satisfactory bondability.

D2. ***adhesive application methods*** - may involve any of the following: brush, spray, roller or spatula application for liquid and semi-liquid adhesives; assembly of dry film; use of hand-powered pumps or mechanical dispensing devices for application of hot-melt, other viscous adhesives and, sometimes, powdered or granulated adhesives. Dispensing devices can be integrated with assembly lines in high-production situations.

D2a. ***brush, spray, dipping, roller*** or ***spatula application*** - Liquid and semi-liquid adhesives can be applied by these methods to one or both of the cleaned adherend surfaces. *Pumps* and *dispensers* or *dispensing containers* can also be used. Applicable adhesives are epoxies, phenolics, polyesters, solvent cements, urethanes, vinyls, acrylics, and anaerobic adhesives. Roller application is common for bonding objects or materials of large surface area to other surfaces. Common applications are bonding of fabrics, fibers, elastomeric parts to steel surfaces in appliances and automobiles, and wall paper installation after the adhesive is applied to the back side of the paper, by roller or brush.

When a *contact cement* is used, it is normally applied as a liquid to the two surfaces to be joined. The adhesive is allowed to dry and then the two surfaces are brought together. The pressure sensitive adhesive "grabs" the two surfaces, once they touch, and pulls them together. For this reason, careful alignment before contact is essential. Contact cement is used to bond wood, plastic, metal, rubber, leather and cloth. A common application is the bonding of laminates to wood surfaces.

D2b. ***dry film application*** - A plastic film is placed, at room temperature, between the parts to be joined. The parts are held or pressed together while heat is applied to soften the film so that it adheres to the mating surfaces. The film can be cut beforehand to fit the joint area. The dry film approach can be less messy than bonding with liquid adhesives. Both thermoplastic and thermosetting plastic films are used. Heat is provided by ovens or other heating methods. If the part to be bonded is thin (e.g., a sheet of veneer), a contact heating source can be used. The method is used for making laminated items when the adhesive film is fed from a roll. Other applications involve the bonding of glass, leather, fabrics, and various metal parts. Aircraft structures and brake linings are bonded with this method. Epoxies, phenolics, and polyamide adhesives may be in the dry film form.

D2c. ***hot melt adhesives application*** - These adhesives are thermoplastics that are applied from either a dispenser or hand gun that melts the plastic or by spatula from a pot of melted adhesive. Beads or webs of the hot adhesive are applied to one of the joint surfaces. Parts are immediately brought together before the adhesive cools. When it does cool, a solid bond exists between the parts. This approach has the advantage of quickness, simplicity, and little need for operator skill. It is used primarily with polyolefins in household applications and with EVA (ethylene vinyl acetate) and polyamide adhesives industrially. Typical applications are: carton sealing, bookbinding, veneer and edge gluing to wood and particle board substrates, labeling, laminating, footwear manufacture, and bonding construction materials.

D2d. ***pressure sensitive and contact adhesive application*** - These kinds of adhesives are useful for commercial products that are intended to be adhered to other products, for example name tags, labels, small signs, etc. In these applications, the pressure-sensitive adhesive is sprayed on the back side of the object to be attached and a thin shield of plastic film is temporarily placed over the adhesive coating. When the device is used, the plastic film is stripped from the back and the sticky surface that is exposed will adhere to other surfaces. Urethane and silicone adhesives are utilized for this approach.

D2e. ***pump/ pressure application of solid adhesives*** - may be accomplished with powdered or granulated adhesives, which are then heated to activate them. Thermosetting adhesives, based on epoxies, silicones, and polyesters can be dispensed this way.

D3. ***joint assembly methods*** - Assembly methods for parts to be adhesively bonded parallel those for the assembly of parts to be fastened by other methods. The methods discussed below in section F are applicable. Adhesive dispensing usually is part of the assembly operation. Dispensing is facilitated by equipment that is operated manually, with a foot pedal, or with some degree of automation. For the kinds of adhesives that require some curing step such as the application of heat, radiation energy, or placement of the assembly in an oven, the operation and control of such apparatus is usually part of the assembly operation. It sometimes is necessary to hold the parts to be bonded during curing, and the fixtures to do this are manipulated as necessary by the assembly operator. When the assembly is automated to some degree, with robots or dedicated equipment, the dispensing and curing steps are similarly automated. Robots are capable of being set to spray, dispense, or otherwise apply an adhesive, and then assemble the adhesive-coated part to other parts, or to a fixture. Dedicated mechanical equipment often provides for dispensing and curing of adhesive as well as mechanical assembly operations.

D4. ***curing methods*** - All adhesives (except pressure sensitive types) require some physical or chemical change after application and assembly in order to achieve holding power. Curing normally involves a change from the liquid or semi-liquid state to the solid state. The change is brought about by one of several mechanisms: cooling, evaporation of solvents, or polymerization. Polymerization, as exemplified by epoxy and silicone adhesives, is usually brought about by heating, but with the proper catalysts, it can take place at room temperature.

In other situations, with thermosetting adhesives, polymerization is initiated by some other factor: Anaerobic adhesives polymerize at room temperature in the absence of air (oxygen). Contact with some metals yields metallic ions that act as catalysts for rapid curing. (These adhesives are used frequently by machinists to lock metal screw fasteners in place, or lock pulleys or gears to shafts).

Other adhesives, (acrylics), polymerize when exposed to ultraviolet (UV) light. One application is for dental fillings, particularly those that are visible and must match the tooth color. These can be cured in a short time at body temperature with a directed exposure to UV light. Another adhesive, a modified acrylic, cures at room temperature when an activator is applied to one of the bonding surfaces and the adhesive is applied to the other surface. No mixing is required. Other radiation sources that may be used for some adhesives are visible light, infra red light, electron-beam or microwave.

The cyanoacrylate adhesives ("super glues") are single component liquids that start to polymerize in only a few seconds from ambient humidity in the air or moisture on the adherend surface. Almost any surface has sufficient moisture to initiate polymerization. The cure takes place at room temperature. These adhesives cure more quickly if the workpiece surfaces are slightly alkaline. They are applied sparingly to only one surface of the joint. They are most useful for bonding small assemblies and are employed in adhering plastic parts.

Silicone and urethane adhesives and sealants polymerize from reaction with ambient moisture. They are used when flexibility is required in the joint. Silicone is particularly advantageous when sealing is required in wet environments subject to temperature changes.

Hot melt adhesives change from solid to liquid or semi-liquid when heated. They then flow to wet the surfaces of the joint and, when cooled, change to solids and gain sufficient holding strength.

Adhesives that harden from evaporation are often either water emulsions such as polyvinyl acetate (white glue) or hydrocarbon-solvent-based (rubber cement and household glue). Phenolics, and polyurethanes can also be solvent-based. Porous substrates such as paper or wood aid in evaporation of the solvent.

E. Welding of Plastics

(For welding of plastics, see sections L though L6 in chapter 4.)

F. Mechanical Assembly Processes

All products with more than one part require some kind of assembly operation and, if packaging is considered, even the one-piece products undergo assembly. Assembly can be defined as the act of placing and fastening two or more parts together to form a useful component. It has been, historically, a manual operation. Increasingly, however, it is being performed by automatic equipment, particularly if production volumes are large. When it is manual, the work is often assisted and augmented by a variety of tools, fixtures, and powered apparatus. Fixtures may be used to hold one part or the semi-finished assembly while other parts are being added, or to guide the added parts to a precise relationship to the base part and those assembled to it. Gages and other measuring devices help the assembler achieve the necessary precision. A wide variety of fastening methods is available to hold assembled components together. Hand tools and powered tools, including powered screw drivers, rivet setting presses, and similar machines are often used to facilitate the fastening of the parts. Sometimes, foot-operated devices provide the extra force needed for press fits, crimping, or other fastening methods. Often and increasingly, parts are designed to snap together with light manual pressure. These designs speed the assembly operation and eliminate the need for separate fasteners. Sometimes, it is advantageous to assemble only a portion of the parts comprising a product and to hold that partial assembly (*subassembly*) for later processing, often for use in a number of different products. Assembly operations commonly comprise the largest item of labor cost in the manufacture of a product.

F1. ***bench assembly*** - In lower quantity production, assembly of an entire product or subassembly may take place at one workbench and be performed by one skilled assembler. In the ideal situation, parts, fixtures, and tools are arranged in a "motion economy" arrangement on the workbench, so that the distances reached and movements made by the assembler are a minimum, and items needed are easily grasped and disposed of. Fixtures and other holding devices and gages may be fastened to the workbench, or otherwise provided, to ensure correct and accurate placement of parts. Hand and bench-mounted power tools are on hand to facilitate the operation. Some products are assembled with a bench arrangement with only one person performing the entire assembly operation, because the sensitivity or precision of the product requires assembly by an expert. Rifle assembly is one example of this approach. When large products such as machines are assembled in one workplace, it may be on the floor rather than on a bench, but with a similar arrangement for various parts and tools. These items are arranged around the work area in an organized fashion from nearby benches and racks. Fig. 7F1 illustrates a bench assembly operation and Fig. 7F2 shows some bench assembly workstations in addition to line assembly.

F2. ***assembly lines*** - are common in mass production industries. The assembly task is divided into a number of short-cycle operations, each

Fig. 7F1 Bench assembly. Note stacked bins for small parts, and devices mounted on the workbench for pressing component parts together. (*Courtesy The Toro Company.*)

Fig. 7F2 An assembly line for the production of a powered hand tool. The operation starts at the workstation to the left of the painted line on the floor (near the bottom of the photograph). The line is U-shaped. As the assembly progresses, the product is handed from station to station and is complete when it reaches the last workstation on the right side of the painted line. There, it is packed in an individual carton. The worker at the base of the "U" (with his back to the camera) operates test equipment. This operation verifies the function, speed and safety of the tool. The operators off-line in the left side of the photo are doing bench subassembly of components that are incorporated into the product on the line. (*Courtesy The Black and Decker Corporation.*)

performed by a different person, who specializes in one operation. A conveyor normally moves the assembly from workstation to workstation located according to the assembly sequence. At each workstation, only a small portion of the total assembly operation may be performed but, when the assembled workpiece reaches the end of the conveyor, the operation is complete. This approach has the advantage of allowing the individual operations to be short and simple enough so that training of operators is simplified and worker skill can be developed quickly. The materials and tools required for each operation are limited enough that they can be arranged for optimum efficiency. Additionally, the workpiece is moved automatically rather than by human labor. (Note: For smaller and lighter products, the workpiece may be moved from station to station simply by having each operator hand it to the next station. Fig. 7F2 illustrates an assembly line where this approach is used.) When conveyors are used, the type of conveyor depends on the size and shape of the product to be assembled and the degree of sophistication of the method. Belt conveyors, roller conveyors, or mechanical transfer devices may be used. Some lines utilize a pallet to hold the product being assembled and the pallet may have fixture elements to guide assembled components to the proper position. Some assembly line systems allow facilities for storage of several assemblies at each workstation so that there is a buffer between stations. This helps prevent a delay at one station from stopping the whole line. At some workstations, the assembly can be performed by robotic equipment or by special dedicated equipment. Test and inspection operations can be incorporated on the assembly line. To be effective, line operations must be balanced, i.e., the time required for the work performed at each station must be approximately equal to that of the other stations; otherwise, time will be wasted at the faster operations because the pace of the entire line is limited to that of the slowest operation. If one workstation has more work content than the others or has a less skilled, slower operator, the output of the line will be limited to the output rate of that station.

Assembly lines are used in the final assembly of almost all common products: automobiles, household appliances, power tools, electronic equipment, computers and computer accessories, clocks, watches, toys, hand tools, stereo and TV sets, furniture, production machinery, cameras, bicycles, and many other products. Fig. 7F2-1 and Fig. 7F2-2 show other typical assembly lines, one for the assembly of professional lawn mowers, the other for room air conditioners. Also see Figs. A2, A3, A9 and A10.

F3. ***automatic assembly*** - Assembly, historically, has been a high-labor-content operation and therefore a costly one. Cost-reduction activity among manufacturers has often focused on the development and use of automatic assembly equipment in order to reduce the amount of labor required. Earlier mechanization of assembly operations involved the use of specialized and dedicated equipment suitable for only one particular product configuration. Such equipment is still preferable in many situations, but the use of robotics, sensors, standardized module

Fig. 7F2-1 The assembly line for professional riding lawn mowers used for golf course putting greens. The mowers being assembled are conveyed from work station to work station by an overhead rail system. (*Courtesy The Toro Company.*)

Fig. 7F2-2 A well engineered assembly line for the production of room air conditioners. (*Courtesy Carrier Corporation.*)

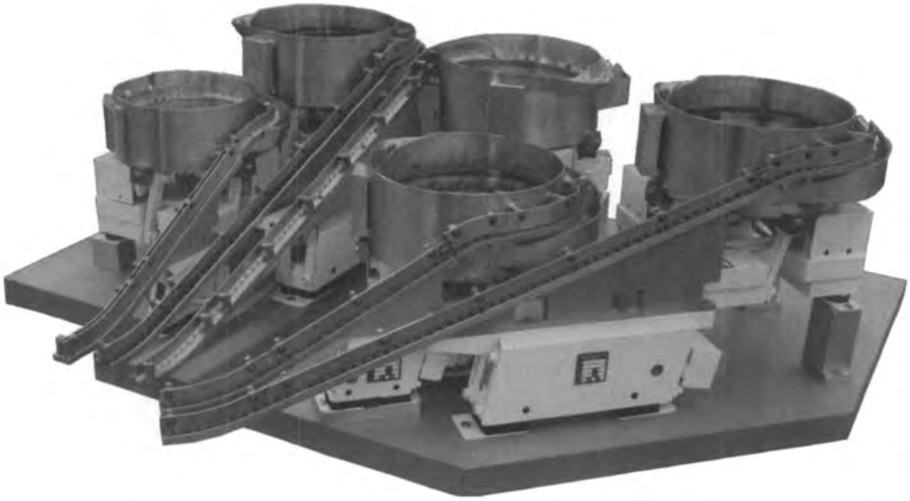

Fig. 7F3a Multiple vibratory parts feeders bring small parts to the assembly station and put them in a consistent orientation. They can then be quickly picked up with short motions by a human assembler or a robot, or a special purpose pick and place mechanism. (*Photo courtesy Service Engineering, Inc., Greenfield, Indiana.*)

mechanisms, and computer control has introduced significant flexibility of application. This makes an automatic approach increasingly justifiable for more moderate production quantities.

F3a - ***parts feeding equipment*** - Automatic devices to sort and orient small parts prior to their assembly to a product have been used for many years to simplify hand assembly and as part of mechanized assembly equipment. These devices are sometimes referred to as bowl feeders. Using rotary, reciprocating, or vibratory motion, they take jumbled small parts from a bowl-shaped container and move them onto "tracks" (chutes or slides) where they move to a point where they are easily grasped and handled. Parts are in random orientation in the tracks but the tracks are designed so that parts not oriented in the desired direction drop off, or are forced off, and fall back into the bowl. Those parts that are properly oriented do not fall off but move on to the assembly operation. Parts that are slightly misoriented are straightened in position by guides along the track. Some feeders use a reciprocating pick-up device, that is shaped so that parts that are not properly oriented fall off as they are being picked up. Bowl feeders are used for all kinds of fasteners, pins, buttons, knobs, plugs, screw machine parts, stampings, and other small parts. Fig. 7F3a illustrates a group of typical vibratory feeders for several such parts.

F3b - ***high speed assembly with dedicated equipment*** - Products such as ball point pens, marking pens, razors, flashlight batteries, toothbrushes, electrical outlets, switches and plugs, lipsticks and other cosmetics, light bulbs, hinges, keys with plastic handles, and similar mass-produced items are assembled with automatic equipment that is designed and fabricated specifically for the product being assembled. The large production quantities of such products makes it economic to undertake the considerable development that dedicated equipment may involve. Such equipment includes the following elements: 1) a means to hold the product being assembled, 2) a means to move the product from work station to work station, 3) a means to deliver the parts and fasteners to the assembly stations and to orient them so that they can be inserted or positioned on the product. 4) a means to insert or position each part on the product assembly. 5) a means to fasten the parts to the product assembly, 6) often, a means to inspect or test that the part is installed properly and that it functions or that the product functions after all parts are assembled to it,

7) Often, a means to attach a label or print nomenclature on the product, 8) some kind of packaging for the product, for example a blister pack, a box, card, or bag.

Holding the assembly: The assembly machine includes a series of fixtures or pallets to hold the base part and the product as it moves through the machine.

Moving the assembly: Since it is normally not feasible to do all the loading, assembly and discharge of a product at one machine station, there are a number of workstations and the assembly equipment includes a means to move the assembly from station to station. The workpiece in process is held in a pocket or holding fixture as it moves. The movement can be accomplished on a turntable or carrousel, or by a linear conveyor of some kind. In either case, the motion normally includes both a moving phase and a dwell phase. The assemblies move from station to station and then remain there until the assembling operations at the station are completed, whereupon they move to the next station. The movements and dwell periods are simultaneous for all stations, although some linear systems are equipped to provide a storage bank of assemblies before each workstation, and more independent timing of the movement between stations, so that a delay at one station does not shut down the entire machine. This buffering is more common if there is a combination of automatic and manual assembly on the conveyor line. Movement and equipment actuation on these machines can be mechanical, hydraulic, pneumatic, or electrical. Rotary table machines generally are limited to simple products because of space limitations.

Parts feeding: (See F3a above.) Parts not arriving in a jumbled storage may be placed in magazines and may be inserted in them in the earlier fabrication operations, often automatically. Other parts are supplied in strip, bandolier, or reel form when the strip-making or reeling can be incorporated in the automatic parts-making sequence. For such parts, the orientation of the part from a mold or die is preserved for later handling in the assembly machine.

Parts insertion: "Pick and place" mechanisms of assembly machines grasp parts at the end of the feeding track, magazine, or bandolier, move them to the insertion point or positioning location on the product and, if applicable, insert them into the assembly. Movements may be controlled by cams, linkages, powered cylinders, stepping motors, or other mechanisms, or a robot may be used.

Parts fastening: In the case of threaded fasteners, many pick and place mechanisms also rotate the fastener after it is positioned. In other arrangements, the rotation and torque is applied at a subsequent station. Press and snap fits are handled similarly. Where applicable, machines are equipped with rivet setting, welding heads (including plastics welding), soldering heads, or adhesive dispensers. Labels and some parts are precoated with a self-sticking adhesive and are pressed after positioning.

Inspection and testing: Vision systems and other sensors on the machine can verify that a part is assembled to the product and that it is properly placed. Functional testers are also incorporated in some machines to verify that the product works satisfactorily. These units also test such factors as electrical characteristics, pressure-holding capability, and freedom of movement of some component.

Marking and labeling: In addition to label attachment equipment, machines can be equipped with various kinds of printing and marking devices using various methods including laser marking.

Packaging: Packaging equipment is often incorporated as part of the assembly machine.

Fig. 7F3b shows an indexing-table arrangement suitable for the assembly of small components. Fig. 7F3b-1 illustrates a much larger machine engineered to assemble and weld rear axle assemblies for pick-up trucks.

F3c. ***robotic assembly*** - Robots are "reprogrammable multifunctional manipulators designed to move materials, parts, tools, or other specialized devices through variable programmed motions for the performance of a variety of tasks" according to the Robot Institute of America.[2] They are described and illustrated in chapter. 14 of this handbook. One common task performed by robots is the moving of parts from a source (feed magazine, tray, vibratory or other orienting device), to an assembly, and positioning or inserting the part into the assembly. However, a very wide range of operations is possible, depending on the production conditions, the product being assembled, and the type of robot available. Robots are also used to apply tools in the assembly operations. Spot and arc welding can be done robotically in some cases. Robots can apply heat from a gas torch or other heat source to carry

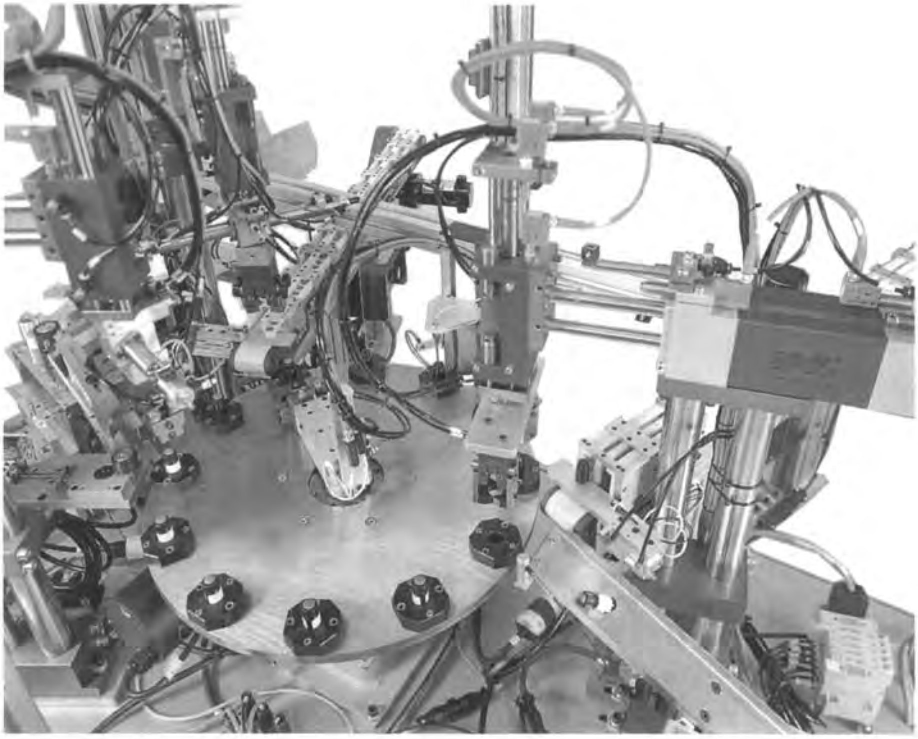

Fig. 7F3b An indexing table arrangement for small assemblies. At each stopping point for the table, as it rotates, a mechanism places a part, fastens it or performs a different operation until the assembly is completed and ejected at another station. Using standard mechanisms, such a machine can be engineered to assemble various different products. (*Courtesy Demco Automation.*)

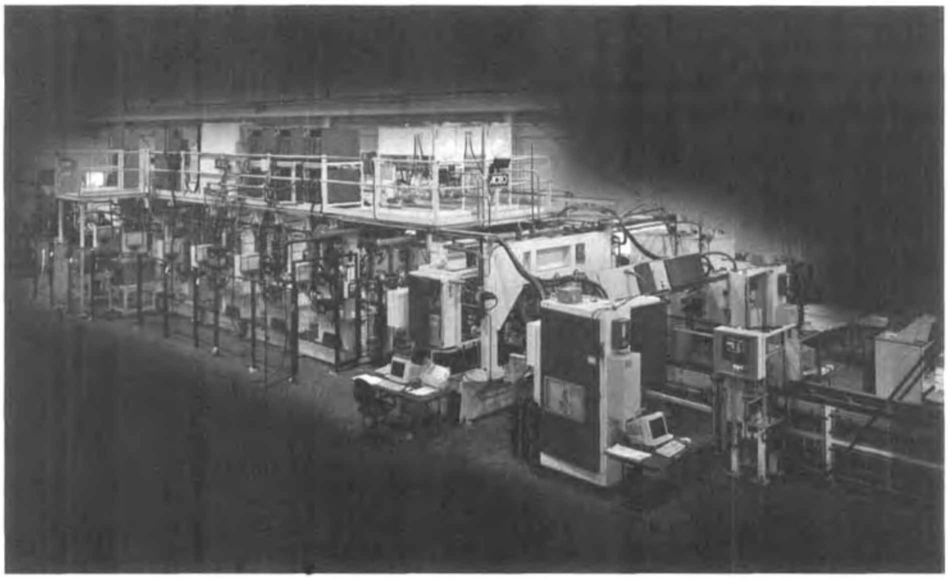

Fig. 7F3b-1 A special machine for the automatic assembly and welding of rear axle assemblies for pick-up trucks. (*Courtesy Acro Automation Systems, Inc.*)

out various kinds of joining operations. Vision systems may aid in directing the robot to the part to be grasped, to identify it, and to verify its correct position. Such systems also aid in directing the part or tool held by the robot to the exact location. Tactile, force, and sound sensors may aid in performing the operations successfully.

The fastest assembly robots are *pick and place machines*, robots with limited motion flexibility, relatively simple programmability, high speed movements, small size, and positioning accuracy to about 0.010 in (0.25 mm). One notable use is in the electronics industry to populate printed-circuit boards.

F4. *mechanical fastening methods*

F4a. ***assembly with threaded fasteners*** - Threaded fasteners (screws, bolts, nuts, machine screws, cap screws, set screws, and drive screws) are probably the most common type of fasteners. With the simplest methods, applicable to repair situations or individual or low-quantity production, they can be started manually and tightened with a hand screwdriver or wrench. In high-production situations they can be started and driven with special equipment that feeds the fastener from a magazine or a vibratory hopper, inserts it in the appropriate opening, and rotates and tightens it with automatic torque control. When production quantities are intermediate, insertion may be manual followed by the use of a powered driver, positioned either manually or automatically. Powered drivers can be electrical or pneumatic. Impact, impulse, or shutoff wrenches can be adjusted to apply the proper torque to the threaded fastener. Robotic assembly is possible with robots that obtain or contain the fastener, position it, and drive it. These more sophisticated methods require sufficient production quantities so that the cost of obtaining or developing and setting up the equipment can be amortized.

Some screw fasteners are self tapping. They either cut or form the threads in the hole. They are useful in applications where the workpiece material is soft enough to be cut or formed. Similar screws for wood are both self-drilling and self-tapping so that even a pilot hole is not necessary.

Fig. 7F4a illustrates a variety of threaded fasteners.

F4b. ***riveting*** - is a common and long-used method for permanently fastening parts together. The rivet, a fastener with a head on one end and a smooth shank, is inserted through aligned holes in the parts to be joined. The shank end is upset (a head is formed) from force against a die, to lock it in place and clamp the parts together. A steel shank may be heated to red heat to facilitate upsetting if the rivet is large and solid, particularly in field structural applications where only a limited amount of force can be applied. (In factory situations, upsetting is almost always a cold forming operation.) Upsetting is performed with press force, repeated strokes of a shaped hammer, or orbital motion of the upsetting tool. Tubular and semi-tubular rivets, split (bifurcated) rivets, and eyelets, are typically hopper-fed, inserted, and clinched in inexpensive equipment. Traditionally, such equipment has been manually operated with the clinching powered by foot force, air pressure, or electricity. For high production situations, the operations can be made fully automatic.

Self-piercing rivets are those that punch a hole and are inserted in it, all in one operation. These rivets are used with non-metals and metals to a hardness up to R_b50. The maximum metal thickness for self-piercing is about 0.15 in (4 mm).

In the aircraft industry, special machines punch the holes, insert the rivet, and upset the shank end, all in one operation.[4] Tubular and semi-tubular rivets are clinched in place by flaring the tubular shank end. Blind rivets are useful when it is not possible to have access to the back side of the riveted assembly. Although holding power is reduced compared to that of conventional rivets, blind rivets can be inserted and clinched easily with hand tools that pull a shaped center plug that expands the tubular shank. Explosive rivets are blind rivets that carry an explosive charge in the shank end. When heat is applied to the rivet, the explosive charge in the shank end is activated, expanding the tubular walls and clinching the rivet. There is no need for heavy axial force.

Fig. 7F4b illustrates the upsetting of several types of rivets.

F4c. ***stitching/stapling*** - is useful for fastening sheet materials, primarily non-metals but can be used with sheets of softer metals. The fasteners are made from either coiled wire or wire preformed into a U-shape and fed from a magazine. With both types, the wire ends are mechanically driven through the sheets to be joined without any holes

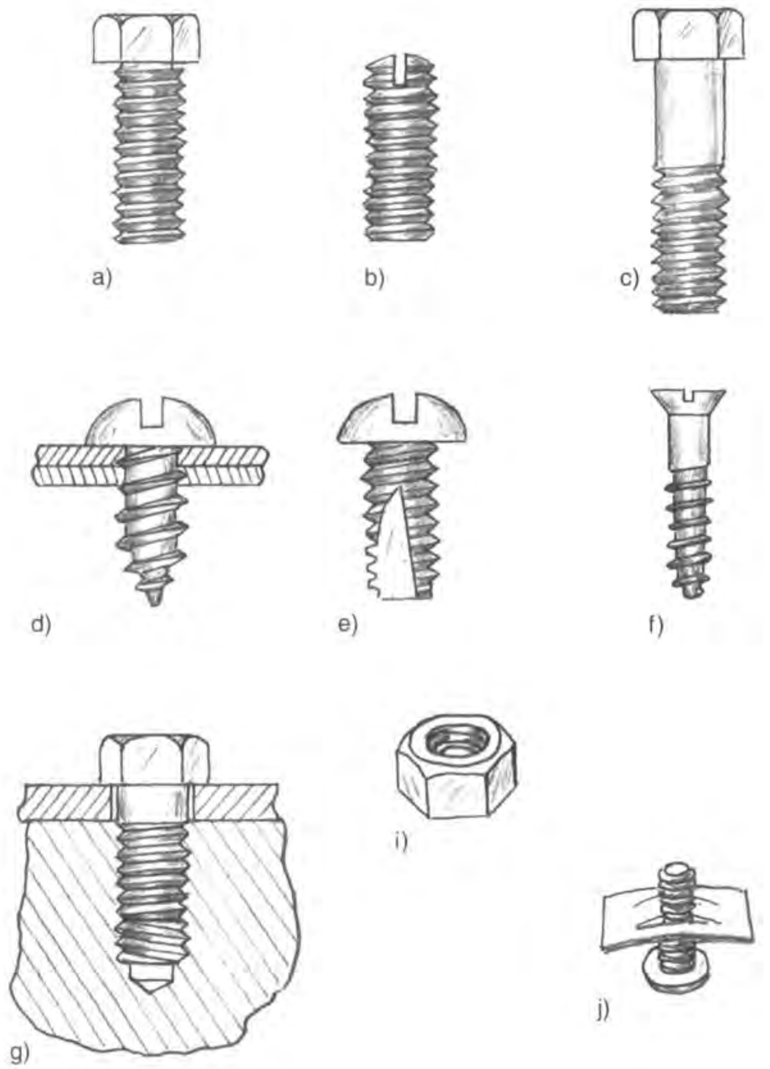

Fig. 7F4a A collection of threaded fasteners: a) hex-headed machine screw b) headless set screw, c) hex-headed bolt, d) thread-forming sheet metal screw, e) thread-cutting screw for plastics and soft metals, f) flat-head wood screw, g) cap screw assembly (in threaded hole), h) hexagonal nut, i) speed nut and screw.

being made beforehand. A forming die, held below the sheets, clinches the wire. The operation, on a semi-automatic basis, has been in existence for many years with operators using stitching or stapling machines. These machines are operated by either foot pressure ("kick press"), pneumatic, or electrical force. Fully automatic equipment is used if production quantities are sufficient. Stitching and stapling are rapid and low in materials costs. The process can be used with fiber, paper, wood, plastics, leather, fabric, and some metal parts. Stitching is commonly used to fasten a sheet to a wood backing. It can also be used to fasten wires, tubes, or rods up to about 1/4 inch (6.3 mm) in diameter to a sheet with a suitable die to clinch the wire around the item fastened. Cold rolled steel sheets to 14 gage (0.080 in)(2 mm) have been stitched together. Fig. 7F4c illustrates typical stitched or stapled joints.

F4d. ***snap fit fastening*** - Snap fits occur when the parts to be assembled are designed so that the act of assembly engages elements on the parts that cause them to be held together. These elements normally incorporate some flexibility of one or both of the parts, creating a snap or click when the parts engage. The snap fit approach is most common in plastics, which have some flexibility, and where it is relatively easy to mold catches

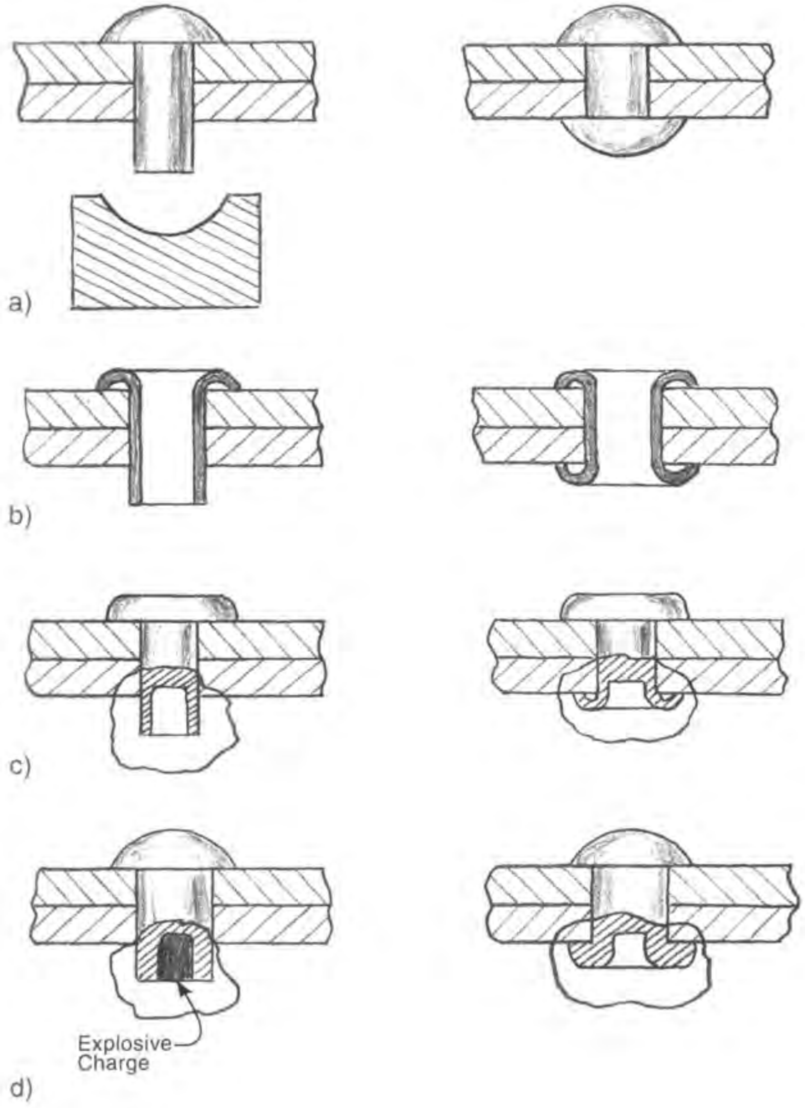

Fig. 7F4b Common rivets: a) solid, b) tubular (eyelet), c) semi-tubular, d) explosive.

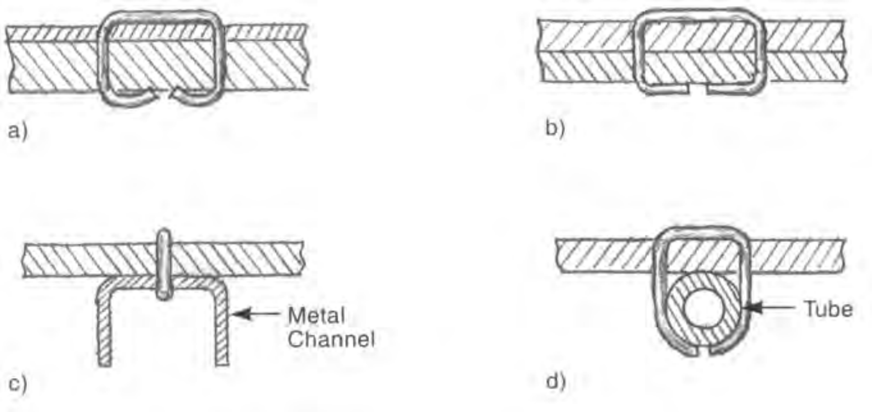

Fig. 7F4c Typical stitched or stapled joints. a) curved clinch penetrates thicker material, b) flat clinch, c) fastening metal channel to a non-metal, d) fastening tubing to a flat sheet.

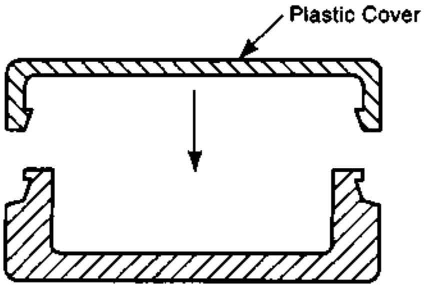

Fig. 7F4d The principle of snap-fit components illustrated with a plastic container cover. (from James G. Bralla, Design for Excellence, McGraw-Hill, New York, 1996.)

or hook-like elements in the parts. Normally, molding the part involves the inclusion in the mold of some kind of side core, an element of the mold that moves at right angles to the direction of the mold opening and closing. When this core is advanced before the mold fills, it creates an undercut in the molded part that provides the holding action. When the core retracts, the hooked or socketed part is free to be ejected from the mold when it opens. Snap fits can also be incorporated in many sheet metal parts. The forming die for such parts can have a cammed punch that pierces and bends the sheet metal to form a catch or hook. The advantage of snap fits is that they eliminate the need for screw fasteners, welds, or other means of attachment that involve additional parts and additional operations. Snap fits not only save labor and eliminate some factory operations, but reduce the need to purchase and inventory fasteners that otherwise would be needed. Usually, a simple direct engagement of the parts also engages the snap-fit elements. Fig. 7F4d illustrates the principle with a plastic container and lid.

F4e. ***press and shrink fit fastening*** - can be a low-cost method for permanently fastening parts together. The method involves the use of heavy force to drive one part, usually a pin, shaft, stud, or other round part, into a hole where the fit is tight or where there actually may be an interference fit. In such a fit, the diameter of the male part slightly exceeds the diameter of the female part. The disadvantage of press and shrink fits is that the dimensions of the mating parts must be closely controlled. Pins to be inserted are often centerless ground to provide an accurate diameter, and the holes to receive them are normally reamed or bored to insure an accurate internal diameter. Often, the end of the part to be inserted is tapered slightly or the hole is beveled slightly to permit easier initial insertion. In a typical situation, the part to be inserted is manually positioned in the hole and then driven into position with a hand, foot, or powered press. In a shrink fit, the receiving part is heated sufficiently to expand it so that the two parts can go together. When it cools, the outer part shrinks around the inserted part, holding it securely. Press and shrink fits are more common in heavier machinery. Fig. 7F4e illustrates a simple press fit of a small pin and two alternative designs that lessen the amount of precision needed to insure a satisfactory fit.

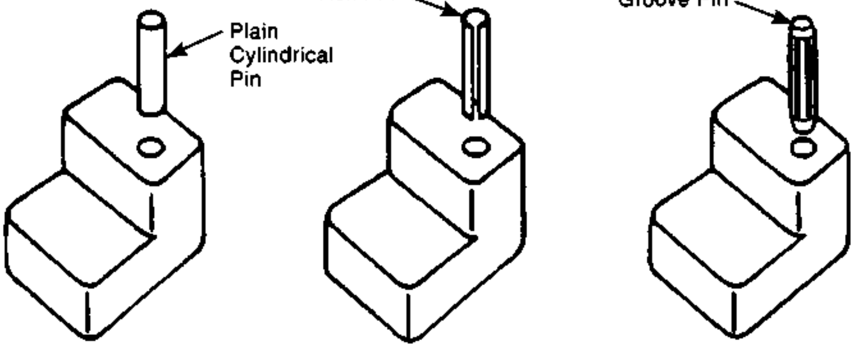

Fig. 7F4e Three varieties of pins press to fit into a metal component. The roll pin at the center and the groove pin at the right allow a lesser degree of precision in the diameters of the hole and the pin; for these pins, reaming of the hole after drilling is not normally required. (*from Design for Manufacturability Handbook, James G. Bralla, ed., McGraw-Hill, New York, 1998.*)

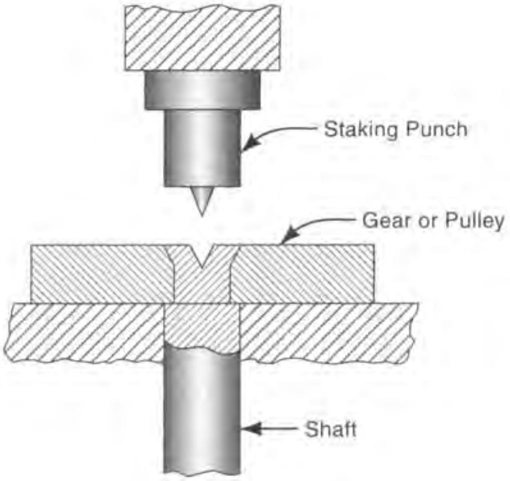

Fig. 7F4f Sectional view of a staked assembly.

F4f. ***staking, seaming and crimping*** - are other methods of fastening parts together.

Staking is similar to riveting except that, instead of using a separate rivet, one of the parts is configured to fit into a hole in the other, and is upset to hold it in place and thereby hold the parts together. Fig. 7F4f illustrates a typical staking operation.

Seaming is a means for fastening sheet metal parts together at their edges. Fig. 7F4f-1 illustrates cross sections of a group of typical seam joints. These joints can be made by a series of operations on a press brake or, in high production situations, by dedicated tooling that fits the parts involved. (See chapter 2, sections C and D for sheet metal shearing and bending processes.) Containers such as drums, cans, and pails are routinely fastened by seaming. The approach is also common on all kinds of sheet metal work including the manufacture of ducting for buildings for heating and air conditioning systems.

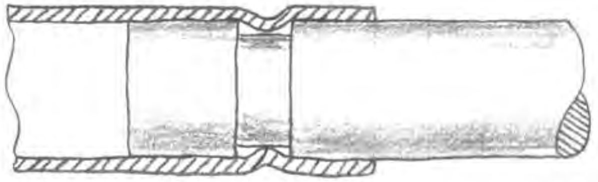

Fig. 7F4f-2 Crimping used to fasten a length of tubing to the end of a rod.

Crimping, when involved in assembly, involves the bending of sheet metal parts to lock them into place. The term usually applies to cylindrical parts like caps, which fit over smaller, more rigid, cylindrical parts. The diameter of the cap is reduced where there is a circumferential groove in the inner part. Crimping is usually a fairly simple operation, performed with a hand or foot-operated lever tool or a light punch press. Electromagnetic forming is also sometimes used. (See 2J3.) Crimping is often less costly than using fasteners to hold the parts together, because it avoids the need for holes and screw threads and eliminates the need to maintain a stock of some kind of fastener. The most common applications of crimping are for the attachment of connectors to electrical wires, fittings to the ends of mechanical wires and cables, the attachment of hose and tubing to end fittings, and shells to bullets. Fig. 7F4f-2 illustrates a typical crimped assembly.

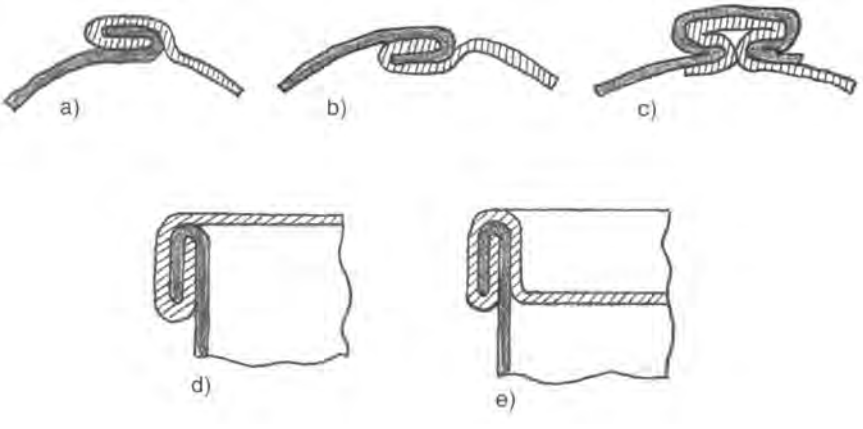

Fig. 7F4f-1 Sheet metal seam joints. a) outside seam, b) inside seam, c) compound seam, d) double seam for containers, e) double seam for containers with recessed end.

References

1. *ASM Handbook, vol. 6, Welding, Brazing and Soldering*, ASM International, 1993.
2. *Manufacturing Processes and Systems, 9th edition*, Ostwald, Munoz, John Wiley, New York, 1997.
3. *Loctite Worldwide Design Handbook, 1996/1997 edition*, Loctite Corporation, Rocky Hill CT.
4. *Materials and Processes in Manufacturing, 8th edition*, DeGarmo, Black and Kohser, Prentice Hall, Upper Saddle River, NJ, 1997.
5. *McGraw-Hill Encyclopedia of Science and Technology, 8th ed., Vol. 6*, New York, 1997.
6. *Solders and Soldering, 4th ed.*, Howard Manko, McGraw-Hill, New York, 2001.

Chapter 8 - Finishing Processes (including Heat Treating)

A. Cleaning Processes

Most industrial cleaning processes use a combination of the operations listed below. The particular cleaning process chosen depends on the nature of the soil to be removed, how heavily the workpiece is soiled, how clean it must be after the operation, and the size, shape, and material of the workpiece. Cleaning operations are performed for aesthetic reasons but most importantly are done to prepare the surface for some coating or finishing operation or assembly. Most cleaning operations are followed by rinsing and drying, particularly if a liquid cleaning agent is used.

A1. ***mechanical cleaning processes***

A1a. ***brushing*** - A fiber or wire brush, normally power driven in industrial applications, is moved against the surface of the workpiece, removing solid material such as rust, caked dirt and loose paint. The stiffness of the bristles depends on the bristle material and the bristle length and thickness. The brush configuration can be adapted to the strength and degree of adhesion of the soil. Brushing is usually only the first operation of a cleaning sequence.

A1b. ***abrasive blasting*** - Abrasive particles, at high velocity, are driven against the workpiece surface. The process is used to remove scale, rust, dry surface dirt and paint but is not effective in removing grease. Various abrasives can be used, from hard silicon carbide, aluminum oxide and steel shot, to softer materials such as plastic beads, corn cobs, nut shells and rice hulls. In addition to cleaning, abrasive blasting may be used for deburring, surface strength improvement or surface roughening.

A1b1. ***wet blast cleaning*** - is abrasive blasting when water is mixed with the abrasive. This permits finer abrasives to be used and provides better results when the workpiece has irregular surfaces. The water also minimizes dust.

A1b2. ***dry blast cleaning*** - is abrasive blasting without the use of a water carrier for the abrasive. The process can be made automatic for high production situations somewhat more easily than wet blast cleaning.

A1c. ***steam jet cleaning*** - High pressure steam is directed at the workpiece. The process can be manual or automatic. Grease, oils and dirt can be effectively removed

A1d. ***tumbling*** - can be an effective means for removing scale and rust from smaller parts as part of a cleaning sequence as well as for polishing and deburring. See B2 below for further information.

A2. *chemical cleaning processes*

A2a. ***solvent cleaning*** - utilizes liquid hydrocarbons as cleaning solvents. There are several basic methods, described below, for applying the solvent to the workpiece. Common hydrocarbons used are petroleum solvents (mineral spirits, Stoddard solvent and kerosene), chlorinated hydrocarbons (trichloroethylene and perchloroethylene) and Freon.

A2a1. ***immersion cleaning*** - is used to remove grease, oil, and oil-bearing dirt. The part is submerged and sometimes soaked in the solvent. The solvent bath may be agitated to aid in soil removal. The weakness of the process is that the solvent becomes contaminated quickly and loses its cleaning power. The process is nevertheless used as an early stage of a more lengthy cleaning process.

A2a2. ***spray degreasing*** - is sometimes used as one step in a cleaning sequence. The workpieces are sprayed with a liquid hydrocarbon to remove oils and oily contamination. As in immersion cleaning, the solvent tends to get contaminated rather quickly.

A2a3. ***vapor degreasing*** - uses a hydrocarbon vapor as a cleaning agent. The use of vapor solves the problem of solvent contamination because the solvent touching the workpiece is clean since, when it boils off from the reservoir of the equipment, it leaves the contaminants behind. In a typical vapor degreaser, illustrated in Fig. 8A2a3, cooling coils in the vapor chamber walls contain the vapors so that they do not escape. The part may be briefly immersed in the boiling or heated liquid solvent, or both in sequence, and/or sprayed with solvent before being raised to the part of the chamber that contains the vapor. The part, if not immersed, is normally cooler than the vapor; the vapor condenses on the part and drips into the reservoir below, carrying away oils and contaminants from the workpiece. As the workpiece warms, the condensation stops and the workpiece can be removed from the vapor, dry and very clean. The cleaning action of the vapor stage of the process for heavy soils is limited because the amount of flushing provided by the condensing vapor is not great. That is the reason for the preliminary immersion and spraying. Some degreasers include another tank (not shown in Fig. 8A2a3) of cooled, clean, distilled solvent. The workpiece is power-sprayed with enough of this solvent to cool it as well as further clean it. Immersion again in the vapor, until the workpiece heats up, provides further flushing and self-drying.

A2b. ***ultrasonic cleaning*** - is immersion cleaning with the addition of agitation of the cleaning solution at an ultrasonic frequency. Most systems agitate at 10 to 40 kHz. Such agitation produces small momentary cavities in the fluid. These tend to pull soils from the workpiece. The process can be

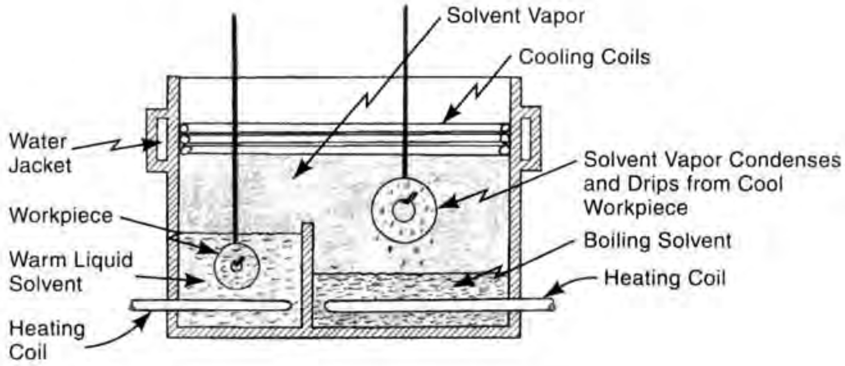

Fig. 8A2a3 A typical vapor degreaser shown in section view. Hot clean vapor condenses on room-temperature workpieces that have been lowered into the vapor, flushing off oils and dirt. More seriously soiled workpieces may first be immersed in the warm liquid solvent. Some degreasers also have a liquid solvent sprayer or a third tank of liquid solvent to aid in cleaning.

carried out with hydrocarbon solvents or water-based cleaners. It is primarily used for intricate smaller parts that can be contained in the ultrasonic tank.

A2c. ***emulsion cleaning*** - uses a mixture of a hydrocarbon solvent, water and emulsifying agents. The solvent, usually petroleum-based, comprises from 1% to 10% of the total and is dispersed in the emulsion as fine globules with the help of an emulsifying agent (soap, glycerol, polyether or polyalcohol). Workpieces are sprayed with the emulsion or are immersed in it with agitation. The emulsion typically is heated to a temperature around 60°C (140°F). The process is useful for removing heavy deposits of soils from the workpiece, for example, caked buffing compounds or mixtures of grease and solid material. It usually leaves a thin coating of oil on the workpiece. A hot-water rinse normally follows the cleaning operation.

The method is economical and safe because of the high water content. It is commonly used as an in-process operation.

A2d. ***alkaline cleaning*** - uses an aqueous solution of various alkaline salts with a wetting agent and detergents as the cleaning medium. Trisodium phosphate, caustic soda and silicates are common choices. The workpiece is immersed in the solution with agitation or the solution is pressure sprayed on the workpiece. The solution is heated to a temperature of from 140 to 200°F (50 to 90°C). This process is more economical than solvent or emulsion cleaning and is widely used, especially in mass production applications. It is effective in removing a wide variety of soils including grease, oil and shop dirt, and, at a slower rate, rust, light scale and carbon smut. Rinsing in water usually follows the alkaline cleaning operation. Safety requirements must be considered when highly alkaline solutions are used.

A2e. ***acid cleaning*** - is very similar to alkaline cleaning except that the alkaline salt is replaced by an acid or acid salt. Otherwise the method is the same; a detergent and wetting agent are also part of the solution. Acid cleaning is superior to alkaline cleaning in removing light rust or other metal oxides, scale, tarnish and similar deposits. For heavy coatings of grease and oil, acid cleaning is not the best process. The process may slightly etch the workpiece surface, but this is desirable for paint adhesion. Aluminum, steel, iron and copper are often cleaned with this approach.

A2f. ***pickling*** - is similar to acid cleaning but is a more aggressive procedure. It involves the removal of oxides - in the form of scale and other surface films - from metal by chemical etching with an acid solution. Any of a variety of acids and acid combinations may be used depending on the metal and the nature of the scale and other oxides on the surface. A stronger acid than that used for acid cleaning and a wetting agent are used. For steel, hydrochloric, sulfuric, hydrofluoric or phosphoric acids may be involved. The acid attacks the surface of the metal workpiece, destroying the bond between the scale or soil and the workpiece. Immersion of the workpiece in the acid solution is the usual method. After the operation, the part is immersed in an alkaline rinse to neutralize the pickling acid.

Pickling is an effective method for removing scale, dirt and oxides from metals. The scale that is removed results from hot forming, welding, or heat treating operations and from corrosion. The operation is performed prior to plating, painting, phosphating, or coating with vitreous enamel. Aluminum, copper, stainless steel, magnesium, and nickel alloys are cleaned by this method but steel is the most commonly processed metal.

A2g. ***salt bath cleaning*** - This is a multi-step method for removing scale, carbon and oxides from metals. The first step involves the immersion of the workpiece in a bath of molten salt which normally is at a temperature between 825 and 975°F (440 to 525°C). The salt solution partially loosens the soil and, if it is an oxide scale, tends to chemically reduce it. The workpiece is then immersed in water. Because the workpiece is now hot, it turns water that it contacts into steam. The expansion of the water as it turns to steam blasts the soil from the surface of the workpiece. The part is then dipped into a neutralizing acid solution and a water rinse. The process is useful for parts with irregular surfaces that may be difficult to clean with other methods. A wide variety of metals are suitable for the process.

A3. *electrochemical cleaning processes*

A3a. ***electrolytic cleaning*** - Alkaline cleaning, acid cleaning, pickling and salt bath cleaning can all be performed with the assistance of electric current. When alkaline cleaning is made electrolytic, the alkaline solution becomes an electrolyte, the workpiece becomes one electrode and the tank or a separate steel plate is used as the other electrode. With electric current, oxygen is released at the anode and hydrogen at the cathode. The bubbles of these gases provide a scrubbing action to the workpiece. Additionally, the electrical charges that are developed on the workpiece and on the soil cause them to separate. The net effect of these phenomena is an effective cleaning operation. However, as the operation proceeds, the soils contaminate the electrolyte, reducing the efficiency of the operation. Because of this, electrolytic cleaning is normally used only as the final operation in a sequence after mechanical and chemical processes.

A3b. ***electrolytic pickling*** - uses the acid pickling solution as an electrolyte, the workpiece as the cathode and the tank or a plate as the anode. Gas released at the workpiece aides in loosening and removing scale. The process requires close control to avoid pitting the workpiece or changing its dimensions.

B. Polishing Processes

B1. ***conventional polishing*** - is a surface smoothing operation performed through the cutting action of abrasive particles glued to or impregnated in a flexible wheel or belt. The wheel may have varying degrees of stiffness, depending on the part to be polished and the desired degree of metal removal. Coarser abrasives and harder wheels remove material more rapidly. Wheels can be made of stacked layers of fabric or leather or of wood or rubber. Wax, fatty acids and tallow are used as lubricants during the process. The work is normally held manually against a powered wheel but the operation can be automated. The workpiece is moved as necessary to apply the cutting action against the entire surface to be polished. Belt polishing can be used if the surface to be polished is relatively flat or regular. Rough polishing is sometimes referred to as "roughing", intermediate polishing as "fining" and finer polishing as "oiling" The purpose of polishing operations, in addition to improving appearance, is to aid fluid flow, to remove burrs, to provide clearance for assembly, and to remove surface indentations that could be stress raisers or sites for entrapment of corrosive substances.

B1a. ***buffing*** - is similar to polishing except that the abrasive is normally finer or milder and is not bonded to the wheel, but instead is loosely held. Charging the wheel or belt with abrasive is effected by holding a bar of abrasive against the wheel or belt. Buffing is usually a secondary operation which follows polishing to further smooth the workpiece surface.

B2. ***barrel polishing (tumbling)*** - usually used for deburring, can also be an effective polishing method. The process involves the use of a rotating barrel or vibrating hopper charged with an abrasive compound (a fine abrasive plus detergents or other cleaners), water, a medium (stones or chunks of ceramic or metal) and the parts to be polished. The rubbing of medium and trapped abrasive compound against the parts, as the barrel moves, provides a polishing operation for the parts' surfaces. The operation is automatic and can provide surfaces comparable to those produced by conventional polishing and buffing if the proper materials and conditions are used. See Fig. 3K3 (deburring by barrel tumbling) and Fig. 3K11 (vibratory deburring).

B3. ***electropolishing*** - is an electrolytic process, the reverse of electroplating. The workpiece is connected to the positive (anode) side of the power supply while a cathode is connected to the negative side. When both workpiece and cathode are immersed into a conductive solution, metal is removed from the workpiece and deposited on the cathode. The electrolytic action tends to concentrate on removal of the high spots, including those of minute imperfections. The result is a gradual leveling and smoothing of the surface and an improvement in its glossiness.

B4. ***burnishing*** - smooths the surface of a workpiece by compressive deformation, normally with pressure rollers, rather than by metal removal. See 3J4 and 3J5.

C. Plating Processes

C1. ***conventional electroplating*** - deposits a metallic coating on the surface of a workpiece. The workpiece is connected to the negative terminal of a direct current source. A piece of the metal to be deposited, is connected to the positive terminal. Both the workpiece and piece of metal are immersed in a solution (normally aqueous) containing ions of the metal to be deposited. The workpiece becomes the cathode in an electrolytic circuit and the piece of metal, the anode. When electric current flows, metal dissolves at the anode and is plated on the workpiece. The workpiece must be cleaned to a high level for the process to be successful. Electroplating is performed to improve the appearance of the workpiece, to improve its corrosion, abrasion or wear resistance, to improve electrical conductivity, to change a dimension or for a combination of reasons. Fig. 8C1 illustrates the process.

C2. ***electroless plating*** - is plating without an electric current. Instead, a chemical reducing agent in solution reduces a metallic salt. The metal then deposits on a catalytic surface of the workpiece. In nickel electroless plating, the most common application, nickel is supplied in the form of nickel chloride which is put in an aqueous solution with sodium hypophosphate as a reducing agent. The solution is heated to a temperature above 160°F (70°C). The workpiece is catalytic, as is the nickel deposit on the workpiece, so the process can continue indefinitely. The plated material is an alloy of nickel and phosphorus with from 4 to 12 percent phosphorus. The electroless process is particularly advantageous when it is necessary to plate recesses and other irregularities that do not cover well with conventional electroplating. Some plastics, when pretreated properly, can be plated with the electroless method.

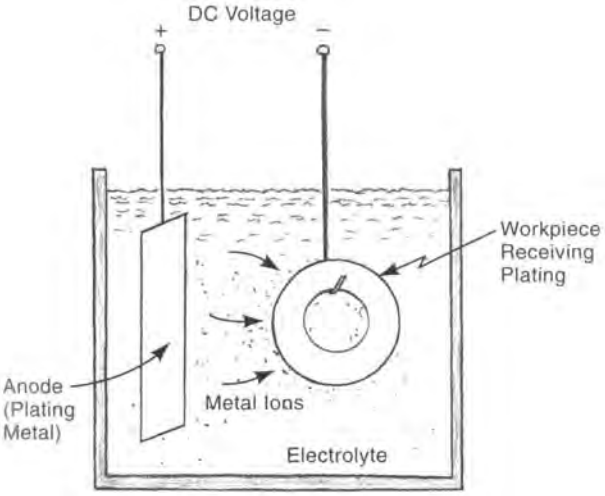

Fig. 8C1 Schematic illustration of the electroplating process.

C3. ***barrel plating*** - Small parts can often be placed in bulk in a porous metal barrel that is immersed in the plating solution. The barrel is electrically conductive and the parts connect to the electric power source from contact with the barrel and each other. Tumbling action of the rotating barrel ensures that all the parts have the opportunity, during the operation, to be in position to receive the metal deposit.

C4. ***mechanical plating*** - involves tumbling the parts to be plated in a mixture of powder or dust of the metal to be plated, glass beads, certain promoter chemicals and water. The force of the glass beads striking the parts peens or hammers the powder particles against the surfaces of the parts, causing them to "cold weld" and tightly adhere to the surface. The resulting coating does not have the sheen of electroplating but can provide galvanic protection for the plated part. The process is also known as *peen plating, impact plating,* or *mechanical galvanizing.*

C5. ***brush plating*** - is a mean for plating only a portion of the workpiece. The process is also known as *selective plating, swab plating* or *contact plating.* Instead of immersing the workpiece in a plating solution, the solution is applied to the workpiece by a tool. The tool is shaped to fit the surface to be plated and is coated with absorbent material that is saturated with the plating solution. A direct-current electrical circuit, in which the tool is the anode and the workpiece the cathode, carries metal ions to the surface of the workpiece. The electrolytic action therefore is identical to that of conventional immersion plating. The shaped tool is usually made from graphite and has an insulated handle. The process is used to plate large parts that do not require plating on their entire surface or are too large for immersion in a standard tank. It is also used for repair work. A common application is the plating of contact points on printed circuit boards, circuit breakers and other electrical or electronic devices where low electrical contact resistance is needed.

C6. ***electroplating of plastics*** - See 4M4a.

D. Painting (Organic Finishing)

D1. ***brushing*** - the common household method for applying paint. A soft bristle brush is dipped in the paint, touched to the workpiece to be painted and moved across it. The paint flows from the brush to the workpiece and, if done with care, covers it with a fair degree of uniformity. However, because of surface variations in the paint coating from the bristles, the process is most satisfactory, from an appearance standpoint, with non-glossy finishes.

D2. ***roller coating*** - is similar to brushing except that a cylindrical roller, normally with a soft, fluffy surface, is used instead of a brush to apply the paint. The finished surface can have a light texture from the surface texture of the roller.

Two other roller coating methods, primarily for continuous sheet or film, are illustrated in Fig. 4K1b (Chapter 4). They are suitable for the application of thin coatings.

D3. ***curtain coating*** - The paint is placed in a horizontal trough that has a slit of narrow but controllable width in the bottom. The trough may be pressurized. Paint flows through the slit in a "curtain". The part to be painted is moved beneath the trough at a fixed rate and passes through the curtain which coats it with the flowing paint. Excess paint is captured and recycled through the system. The process is economical for high-production situations. See Fig. 8D3 for an illustration of curtain coating equipment.

D4. ***dip painting*** - involves immersion of the workpiece in a container of paint. Excess paint is allowed to drain away after the part is lifted from the container. The process is applicable to parts with irregular configurations that may not be feasible for coverage by other painting methods. However, parts must be of such shape or must have drain holes to allow the excess paint to drain away.

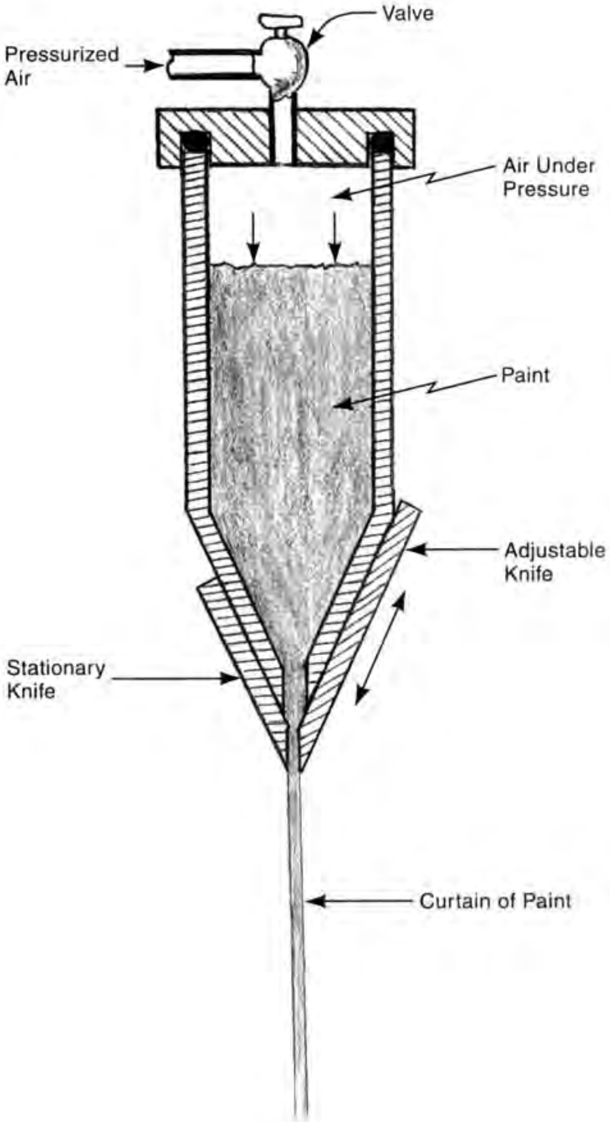

Fig. 8D3 Sectional view of curtain coating equipment. Workpieces are painted as they pass through the falling curtain of paint.

D5. ***flow coating*** - is similar to curtain coating except that the paint flows through one or more nozzles that are directed at the workpiece. Excess paint is drained from the workpiece, captured and recycled.

D6. ***spray painting*** - In this process, liquid paint is atomized and directed at the workpiece. Spray painting is widely utilized and, when properly applied, produces a smooth, uniform paint coating. Portions of the workpiece that are not to be painted are suitably masked. Different spray atomization methods in use are: air, airless and, with some electrostatic painting, centrifugal.

D6a. ***air atomized spray*** - Compressed air atomizes the liquid paint and propels it from the nozzle of the spray gun. This method allows good control of the spraying rate during the operation.

D6b. ***airless spray*** - Hydraulic pressure forces the liquid paint through a nozzle, where it breaks up into fine droplets that are propelled toward the workpiece. This approach avoids the tendency with air spray of having some of the paint carried by the air flow away from the workpiece. However, control of the spray and varying the amount sprayed is not as feasible as it is with air atomization.

D7. ***electrostatic painting*** - involves the use of an electrical charge on the droplets of atomized paint (or particles of powdered paint). The workpiece is grounded and the paint particles are then attracted to it. This greatly reduces overspray and correspondingly improves the yield per volume of paint consumed. The workpiece must have some electrical conductivity for the process to work effectively, but non-conductive parts can be dip-coated with a conductive coating as a preliminary operation.

D7a. with ***centrifugal spraying head*** - Some electrostatic painting is done with a rotating disc or bell-shaped dispenser to atomize the paint. The paint is introduced at the device's center of rotation and moves to the periphery and into the air in fine droplets by centrifugal force. The disc or bell rotates at a speed of 900 to 1800 rpm and is charged with a high negative potential. The paint droplets are thus electrostatically charged and are attracted to the grounded workpiece. Discs are normally mounted horizontally (i.e., with a vertical axis) and the workpieces to be painted are conveyed in a circular path around the disc. The disc may also be oscillated upward and downward, particularly if the workpieces are long. Bell shaped atomizers usually have the bell opening positioned to face the surface of the workpiece to be coated. These atomizers may be mounted next to a workpiece conveyor or may be hand operated.

D8. ***powdered paint coating*** - Coating parts with powdered material rather than liquid paint has a number of advantages: No solvent is required, so the pollution, venting and air make-up factors are virtually eliminated. Powder not utilized can be recovered and used, so yields are higher and the problems of clean up and disposal of dried overspray are minimized. Thicker coatings can be made in one application. However, the powdered material, when suspended in air, can constitute an explosion hazard. Paint in powdered form consists of finely ground plastic resin with coloring agents. Epoxy, nylon, acrylic, vinyl, polyester, and polyethylene are commonly used materials. They are applied to the workpiece with several methods. Normally, several cycles of workpiece cleaning and, often, a phosphating treatment precede the coating operation. After the coating application, the coated workpiece is oven heated, causing the paint particles to melt, flow and fuse together. The resulting coating is tough and well bonded to the part's surface. Typical applications are appliances, office furniture, farm equipment, industrial machinery, automotive parts, and architectural components.

D8a. ***electrostatic spray powder coating*** - Dry powdered plastic resin is pneumatically fed from a supply source to the spray gun where it is electrically charged. The charged particles from the spray gun are attracted to the electrically grounded workpiece by electrostatic attraction and adhere to it. Oversprayed powder settles to the bottom of the spray booth where it is recovered and reused. The powder coating on the workpiece adheres sufficiently so that the workpiece can be moved to the next operation. This involves oven heating the workpiece so that the plastic particles in its powder coating soften, fuse together and bond to the workpiece surface. Typical coating thicknesses are 0.001 to 0.004 in (0.025 to 0.1 mm) though thicker coatings can be applied. Because of the electrostatic attraction, the process can be automated relatively easily. See Fig. 8D8a.

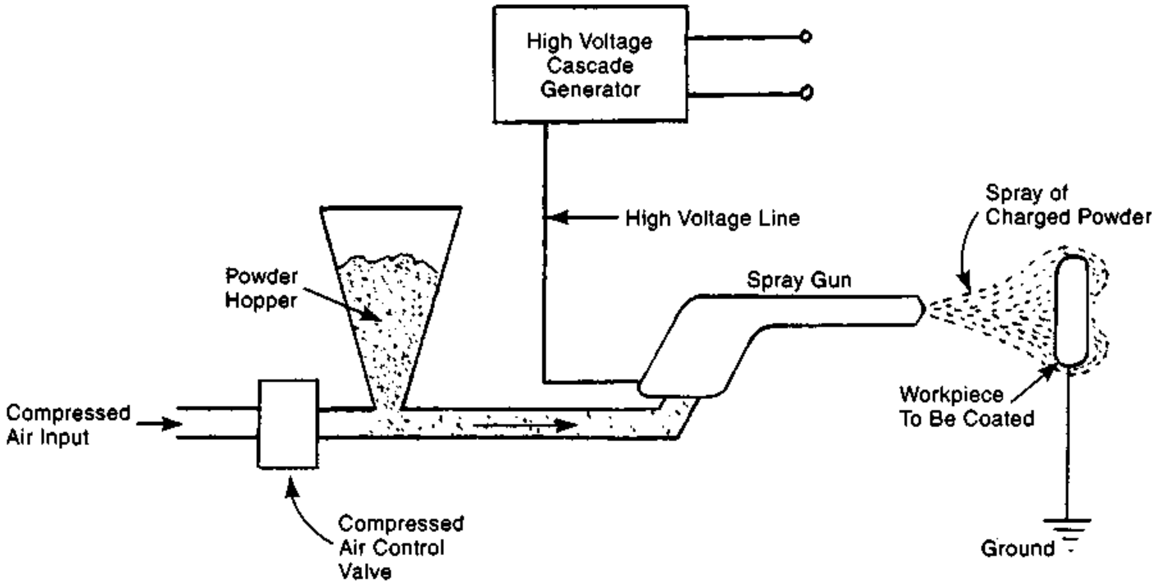

Fig. 8D8a Electrostatic powder spraying - apparatus for applying powder coating to a product with the aid of electrostatic attraction.

D8b. ***fluidized bed powder coating*** - utilizes a tank-like container containing dry plastic powder that is aerated from below with low-pressure air flow through a porous membrane. The air flow causes the particles to be suspended in a dense cloud; the mass behaves like a fluid. The workpiece, preheated to 400 to 600°F (200 to 315°C), is lowered into the tank. The plastic particles contact the workpiece, soften and melt from its heat and adhere to the workpiece surface. The workpiece then is oven heated to further fuse the particles into a uniform film. When the workpiece is removed and cooled, the powder becomes a tough, solid, adherent coating that also is decorative. Standard coating thicknesses are somewhat thicker than those from spraying liquid paint, averaging from 0.007 to 0.015 in (0.18 to 0.38 mm) in thickness. Because of the greater thickness, the process is particularly applicable to parts that require resistance to abrasion or impact. Epoxies and polyvinyl chloride are common powder materials but acrylics, polyesters, polyimides and silicones are also used. Fig. 8D8b shows a typical fluidized bed.

D8c. ***electrostatic fluidized bed powder coating*** - In this process variation, the workpiece is held just above the surface of the fluidized bed. The particles are electrically charged by a grid positioned just below the top of the fluidized bed or by a pre-charged air flow. The workpiece may be heated or not, but those particles floating just above the fluidized bed are attracted to the grounded workpiece and adhere to it. This approach provides somewhat better control over coating thickness than conventional fluidized bed coating, but is limited to parts

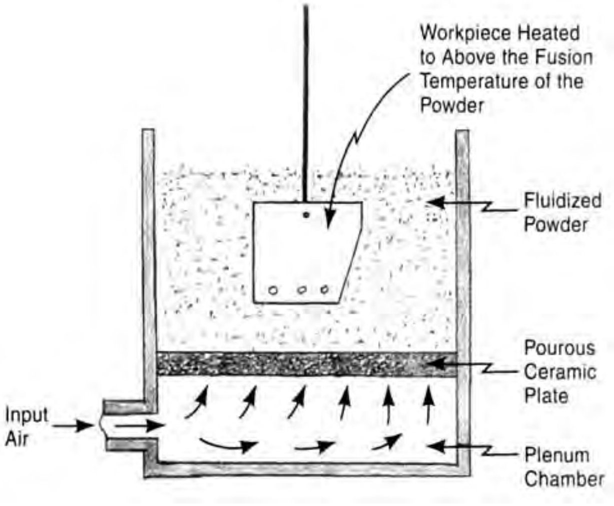

Fig. 8D8b A typical fluidized bed arrangement for powder coating workpieces.

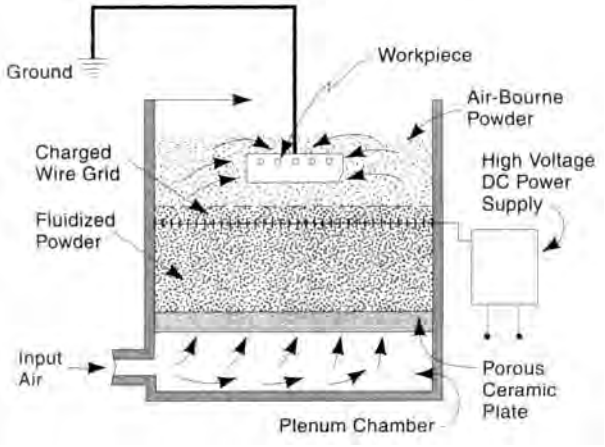

Fig. 8D8c The arrangement used for electrostatic fluidized bed powder coating. The arrangement is very similar to that shown for a regular fluidized bed except that the powder is given an electrostatic charge which causes the particles to be attracted to the grounded workpiece.

that are low enough in height to be able to be immersed in the cloud of powder particles just above the fluidized bed - approximately 2 to 4 inches (50 to 100 mm). The method has both the advantages and disadvantages of electrostatic spraying in that the attraction of the particles to the workpiece may result in less coverage in deeply recessed areas in the workpiece and there may be uneven coverage of vertical surfaces. Fusing the coating by oven heating follows the coating operation. Fig. 8D8c illustrates the process schematically.

D8d. ***friction static spraying*** - In this method, friction between the powder particles as they collide with each other and the spray apparatus generates a static electrical charge on the particles. The charge may be either positive or negative. The powder spraying apparatus removes either the positive or negative charges, leaving a powder with uniformly charged particles when it leaves the spray gun. The spray has the ability to enter narrow openings and the space between narrowly angled surfaces more easily than with conventional electrostatically-charged powder. However, powder must be sprayed at a lower rate with this technique so its use is best limited to the coating of components that are difficult to cover with conventional electrostatic methods.

D8e. ***flame spraying of powdered paint*** - The flame spraying method for applying metallic coatings from powder (See F4b below.) also can be used to apply powdered plastics. The powder is fed to a fueled spray gun where it is melted and blown against the surface of the workpiece. The heat for melting is supplied by the combustion of gases, usually propane and oxygen. The powder is fed in a stream of air through the center of the ring-shaped flame. The liquid or semi-solid plastic particles adhere strongly to the heated workpiece and fuse together. Fluidized-bed-grade powder is used. The process is not widely used because it is a manual process requiring a skilled operator and the coating is difficult to apply in a uniform thickness. Undercut areas that are too small for gun access cannot be coated. Also, the method is somewhat slow and overspray cannot be recovered since molten droplets fuse together. However, it is useful for coating objects too large for a fluidized bed or those that are in the field, since the spraying equipment can be portable.

D9. ***electrocoating*** (also referred to as ***electropainting, electrophoresis, electrophoretic coating or electrodeposition of paint***) - is a method of application of water-based paints to electrically conductive parts. The workpiece is electrically charged and immersed in a tank containing the aqueous-based paint and deionized water. The paint particles are given an opposite charge, causing them to migrate to an immersed workpiece and adhere to its surface. The workpiece is removed from the tank and flushed with water to remove excess paint. The remaining paint film on the part is level and tightly adhering. Oven baking completes the process. Epoxies and acrylic-based paints are commonly used. Polyesters, vinyl-based plastics, phenolics and alkyds are also employed. The process is fast, provides uniform film thickness, good coverage of recesses and high paint utilization. It can be fully automatic. However, color changes are more difficult, surface defects may show through the coating and process conditions must be closely controlled. The process has been used on automobile bodies.

D10. ***vinyl plastisol coatings*** - These are put on tool handles for ease of handling and electrical insulation. They are also added to woven steel wire fencing and other items for appearance and corrosion protection. The normal method of application is dipping. The part to be coated is heated and immersed into the liquid plastisol which is a suspension of vinyl plastic and plasticizer. The heated liquid that touches the workpiece "gels", forming a coating up to about 1/8 in (3 mm) in thickness, and sometimes up to about 1/4 in (6 mm). As the workpiece is withdrawn, the plastisol cools and becomes a flexible solid. (See 4K and 4K2.)

E. Chemical Surface Treatments

E1. ***anodizing*** - is an electrolytic process that produces an oxide coating on aluminum and some other metals. Aluminum forms a natural oxide surface without anodizing, but such a surface is much thinner and has much more limited properties than those that can be provided by anodizing. The workpiece, connected as the anode of a DC power circuit, is immersed in an acid solution. The current flow liberates oxygen at the surface of the workpiece and the oxygen reacts with the aluminum to form aluminum oxide. Chromic, sulfuric or oxalic acid are ones used most commonly in the electrolyte solution. Thorough cleaning and etching or treatment with a brightening solution are performed before anodizing.

The anodized coating is hard, smooth, wear and corrosion resistant, and easily colored, but somewhat porous. Colors are applied by dipping the workpiece in a liquid dye after anodizing. Coloring can also be produced by incorporating organic acids in the anodizing solution. Anodized surfaces are also usable as a base for painting. Sealing of the surface is a common subsequent operation that closes surface pores and makes the surface stain resistant.

Magnesium, titanium and zinc can be anodized but these metals represent only a small portion of the materials processed. Anodized surfaces normally range from 0.0002 to about 0.0007 in (0.005 to 0.018 mm) in thickness although hardcoat anodizing can produce thicker surfaces.

E1a. ***hardcoat anodizing*** - uses one of a number of proprietary processes to produce a thicker, harder anodized surface. In one process, a sulfuric and oxalic acid mixture is used at somewhat lower temperatures and higher current densities than with conventional anodizing. Surfaces as thick as 0.004 in (0.10 mm) are feasible. This approach provides superior wear and corrosion resistance.

E2. ***phosphating*** - Iron or steel workpieces are phosphated by immersing them in a dilute solution of phosphoric acid into which a metallic phosphate has previously been dissolved. (Iron, zinc, or manganese are the usual phosphates.) The operation is preceded by a cleaning sequence, the nature of which depends on the type of soil on the workpiece. With large workpieces, the phosphating solution may be applied by spraying instead of immersion. Small parts may be tumbled as they are immersed. The phosphating solution is normally heated to a temperature of 90 to 210°F (32 to 99°C). Immersion times vary with the thickness desired, the bath temperature and the type of phosphating, but typically range from one or two to about 39 minutes. Spraying is a somewhat faster operation. Phosphating provides a thin coating which penetrates into the base material. Phosphated surfaces provide a good base for painting or bonding by improving adhesion and helping to prevent corrosion. Wax and oil can be retained also, providing another means of corrosion resistance. Phosphate coatings also facilitate drawing and other forming operations. Galvanized steel can be phosphated as a base for painting. Phosphating of stainless steel and some alloy steels is difficult.

E3. ***chromate conversion coatings*** - The workpiece is immersed, sprayed or brushed with an acidic solution of hexavalent chromium compounds. Chromic acid, sodium or potassium chromate or dichromate, hydrofluoric acid or hydrofluoric acid salts, phosphoric acid or other mineral acids may be employed. The chemical reaction of the solution with the workpiece metal forms a protective film. The film is comprised of complex chromium compounds. It is very soft when first formed, but when dried and allowed to age, becomes more abrasion resistant. Chromate conversion coatings are applied to workpieces made or coated with zinc, cadmium, magnesium, aluminum, copper or silver. The process is used to provide a protective barrier against corrosion. It also can be used to improve the appearance of the workpiece by providing better brightness or color to the coating. Chromate conversion coatings also provide excellent bonding surfaces for painting or lacquering. Most processes are proprietary.

E4. ***black oxide coating*** - is a chemical treatment for iron and steel parts. The procedure involves the following steps: 1) Soak the parts in an alkaline cleaner at 180°F (80°C). 2) Rinse the parts in water at 150°F (65°C). 3) Place the parts in a solution of caustic soda (sodium hydroxide), sodium nitrate/sodium nitrite with wetting agents and stabilizers at 290°F (143°C) for 15 to 30 minutes. 4) Rinse the parts in cold water. 5) Immerse the parts in oil or molten wax. The treatment provides a semi-porous surface without changing dimensions. After oil or wax impregnation, a modest amount of corrosion protection is provided and the black surface has a pleasing appearance. Black oxide treatment is used for firearms parts, spark plugs, tools, gears, and sprockets. The procedure is somewhat hazardous because of the caustic solution and high temperature. Cold blackening systems with proprietary solutions are available but their results are not quite as satisfactory. Most apply a copper-selenium coating.

F. Other Coatings

F1. ***porcelain enameling*** - provides a vitreous coating on metal products. Steel, cast iron and aluminum are the metals most commonly processed. Porcelain enamel coatings provide corrosion and weather resistance, improved appearance, electrical insulation, and a more easily cleaned surface. Stove tops, cooking containers, kitchen sinks, bathtubs, architectural components, signs, reflectors and water heater tanks are products that commonly receive this treatment. Porcelain enameling requires several steps: 1) chemical cleaning of the workpiece to remove oils, scale, and dirt. 2) mechanical treatment of the surface by grit blasting or other methods to provide a better surface for enamel adherence. 3) coating of the surface with the frit material. There are several methods available: fluidized bed or spraying of dry powder, and spraying, dipping or flow coating of liquid slips. If a liquid slip is used, coating is followed by drying. 4) firing of the coated workpiece at temperatures from 900 to 1500°F (480 to 800°C) to fuse and bond the enamel coating. The process parameters vary somewhat depending on the material to be coated. Often, several coats of enamel are applied. The enamel frits are prepared beforehand in a series of operations. Up to about 15 ingredients (silicate glass, metal oxides, ceramics, pigments and other additives) are mixed and melted together, then made into thin sheets which are broken up and milled into a fine powder. The powder then is usually mixed with water to form a slip. (Also see 5A5i and *enamel, vitreous.*)

F2. ***hot dip coating (galvanizing)*** - is achieved by immersing the workpiece in a molten bath of the coating metal. The sequence of operations is as follows: 1) Thoroughly clean the part to be coated of oil, rust, scale and other contaminants. 2) Dip the part in a solution of aqueous flux. (An alternative is to have a layer of liquid flux on the bath of molten metal.) 3) Immerse the part in the bath of molten coating metal. The bath temperature for zinc coating (galvanizing) is about 840°F (450°C) and for aluminum, about 1290°F (700°C). 4) Perform whatever post-coating operations are required by the application for the coated part. Operations include slow cooling, quenching, and conversion coating.

F3. ***vacuum metalizing*** - puts a thin coating of a metal or metallic compound on a workpiece in a vacuum chamber. In the chamber, under a vacuum, metals, alloys or chemical compounds are vaporized with heat and are deposited on the surface of the workpiece. The full sequence of operations is as follows: 1) The part is thoroughly cleaned. Vapor degreasing is a common cleaning method. 2) If necessary to seal the part's surface or provide a smoother substrate, the part is coated with a precoat material. 3) Vacuum coating takes place. The parts to be coated are placed in the chamber that is evacuated to 10^{-3}–10^{-5} mbar. A source of coating material is placed in a central location in the chamber. After the vacuum is achieved, in the most common approach, the source metal is heated by electrical resistance, induction or other methods to the temperature at which the metal vaporizes. The metal vapors condense on the workpiece surfaces that face the source of metal. (The metal vapors travel only in a straight line, so the parts must be arranged and held in the proper position.) Parts may have to

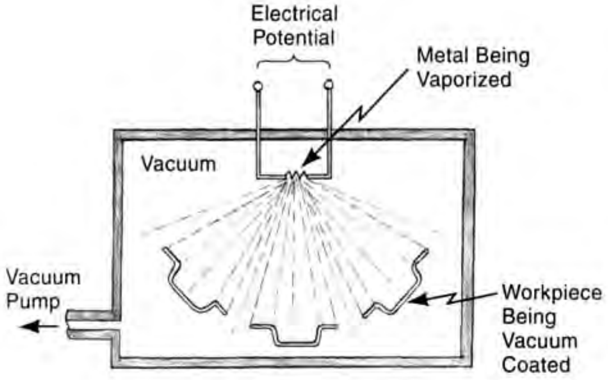

Fig. 8F3 Vacuum metalizing. In this example, electrical resistance heating vaporizes the coating metal. The metal vapors travel in a straight line and condense on the surface of the workpieces.

be rotated during the operation if more than one surface or a curved surface is to be coated. 4) After coating, a clear lacquer protective coating may be applied to the surface of the workpiece to protect the coating. Fig. 8F3 provides a schematic illustration of the process which is used for appearance improvement, reflectance or to provide greater wear or friction resistance to the workpiece. Vacuum metalizing is also an important method for applying thin films to substrates in the manufacture of integrated circuits (13K3a4).

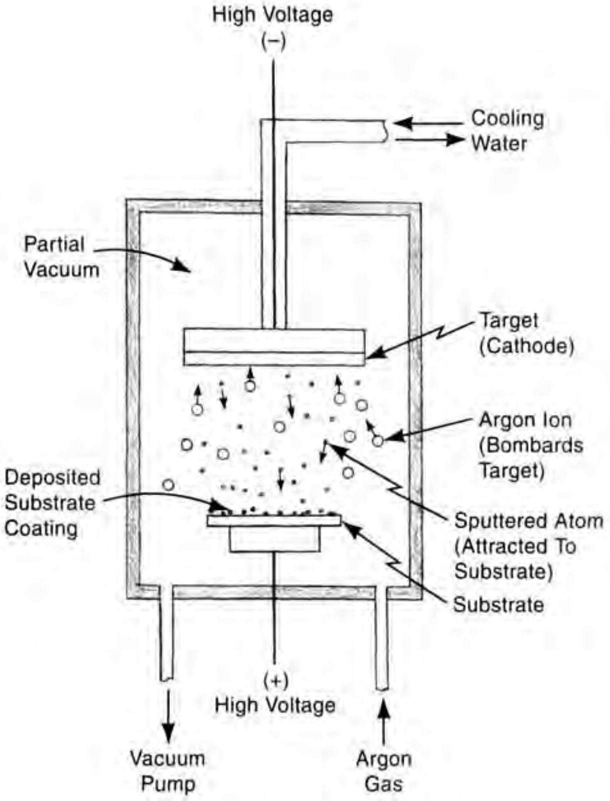

Fig. 8F3a An arrangement for sputtering to apply any of various materials to a substrate (workpiece) surface.

F3a. ***sputtering*** - can deposit any material to any substrate. The process uses ionic (plasma) bombardment rather than heating to vaporize the coating material for vacuum deposition. The source material, in a partial-vacuum atmosphere containing argon, has a negative electrical charge and is subjected to a stream of ions against its surface from either a glow discharge or ion beam. High voltage (2 to 6 kV) ionizes the argon. A magnetron may also be used as the source of ionizing energy. In any case, atoms of the source material are dislodged from the surface. They are attracted to the workpiece surface, which has a positive charge, causing the atoms to adhere to it. The process has advantages in thickness uniformity, adherence of the coating, and ability to coat the workpiece with nonmetallic as well as metallic materials. Semiconductors, metal alloys, insulators, and various compounds can be deposited with this method. Deposition rates, however, are low and the process is normally limited to sheet and tubular workpieces. Three dimensional workpieces may not be suitable because material transfer is line-of-sight. Fig. 8F3a illustrates the process. Applications of sputtering include deposition of thin films in integrated circuit manufacture, production of thin film resistors, capacitors and lasers, deposition of optical coatings on eyeglasses and lenses, and the coating of costume jewelry. The process can also be used for engraving if the target material is the workpiece rather than the source of material to be deposited on another workpiece.

F3b. ***chemical vapor deposition (CVD)*** - is a coating process that uses a reactant gas or vapor in a chamber with a heated workpiece. The gas decomposes at the heated surface of the workpiece, depositing a solid element or compound. The process has similarities to carbonitriding or gas carburization. The material is either simply deposited on the surface or absorbed into it. A second material in gaseous form also results from the reaction and is drawn off the work chamber. Sometimes, provisions are made to introduce various reacting compounds in succession. Rates of deposit are high and the coatings may be corrosion resistant and durable.

The process is used with a variety of materials and applications: One application is to provide hard cutting tool coatings of titanium carbide, titanium nitride, aluminum oxide and other materials. It is also used to provide anti-oxidation coatings of refractory metals and other alloys that are subjected to high temperatures, semiconductor coatings in the production of integrated circuits and carbon-carbon coatings for rocket and space components. (Also see paragraph 13K3a3.)

F3b1. ***plasma-enhanced (or plasma-assisted) chemical vapor deposition***[5] - is a process variation of chemical vapor deposition, (CVD). This approach, (sometimes referred to as PECVD), enables the CVD to take place at considerably lower substrate temperatures and with higher deposition rates. The reactant gas is subjected to an electrical field at a frequency of 50 kHz to 13.5 MHz or, in some cases, at microwave frequencies. The electrical field causes collisions of the gas molecules, producing ions, free radicals, excited neutrals and electrons which are more reactive. The plasma promotes the reaction of the chemical deposition. The process is used to deposit thin films in the fabrication of semiconductor wafers where the higher temperature of thermal CVD would be detrimental. It is also used in depositing optical coatings and wear-resistant coatings on cutting tools.

F3c. ***physical vapor deposition (PVD)*** - is a general term to denote coating processes whereby individual atoms or molecules of the coating material are deposited on the workpiece surface. Sputtering and vacuum metalizing (see above) are physical vapor deposition processes.

F3d. ***ion implantation*** - Ionized atoms of a material are bombarded against a workpiece surface in a high vacuum, causing the alloying of the workpiece material and the material that strikes it. The alloying occurs only at the very surface; penetration is shallow. A frequent application for cutting tools is the implanting of nitrogen to provide improved wear resistance. The process is used in the semiconductor industry to introduce dopant atoms into silicon wafers. Another important application is the bombardment of titanium or cobalt-chromium artificial joint bearing surfaces with nitrogen ions for wear resistance. There are no significant dimensional changes resulting from the process. However, the equipment is costly and a line-of-sight must exist between the source of the ions and the surface to be treated.

F4. ***thermal spray coating*** - sometimes known as ***flame spray coating***, is a process for applying a coating of a high-performance material on a workpiece. Liquid metal, or other material, in spray form, is directed at the workpiece and coats it. Metals, alloys, intermetallics, carbides, ceramics, cermets and plastics can be applied by this method. The process is used to salvage worn or undersized parts, to provide coatings for wear resistance, for corrosion or heat-oxidation protection and for electrical conductivity. It can also be used to produce parts with superior properties though they are fabricated from lower cost, more easily processed, materials. Coating thicknesses range from about 0.004 to 0.5 inches (0.1 to 12 mm). In most of these processes, substrate temperatures do not rise to very high levels so the operation can be performed with a number of non-metallic materials as the substrate. In all thermal spray coating processes, the cleaning and degreasing of the workpiece is a prerequisite. Scraping, wire brushing, grit blasting, chemical cleaning or machining can be used to remove scale and other foreign materials. Vapor degreasing and aqueous methods are used to remove grease and oils. Often it is desirable to roughen the workpiece surface before spraying to improve the bonding of the coating.

F4a. ***wire metalizing*** - is the earliest thermal spraying process. Wire (or rod) is fed through a dispensing gun through a ring of flame which melts the tip of the wire. Compressed air or gas atomizes the melted metal and propels the fine droplets at 300 to 800 ft/sec (90 to 240 m/s) to the workpiece. The droplets, 0.0004 to 0.004 inches (10 to 100 μm) in diameter, strike the workpiece surface, flatten and solidify. Oxyacetylene, propane or other fuel gases can be used to provide the heat for melting.

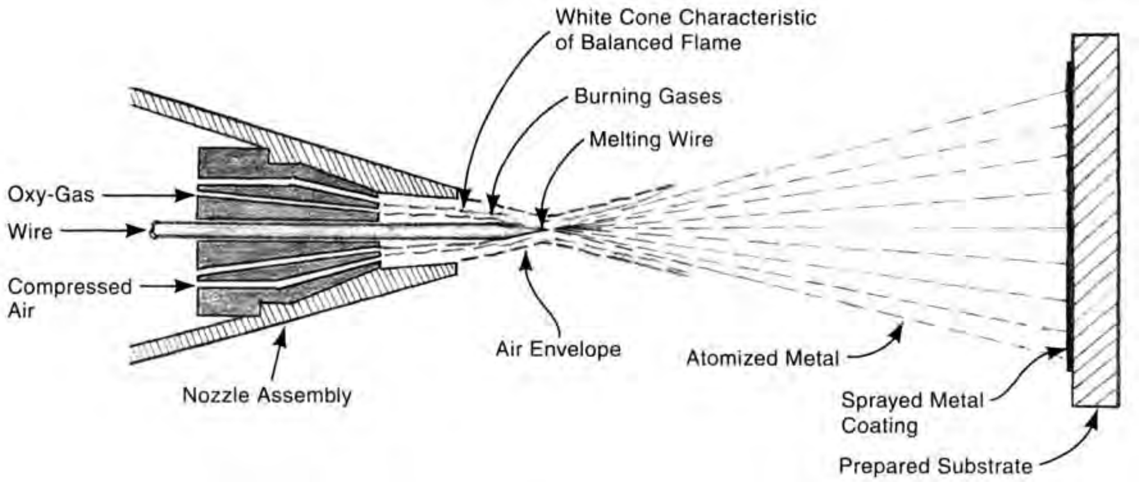

Fig. 8F4a Wire metalizing to spray liquid metal on the surface of another metal part.

The surface to be coated is often grit blasted to clean and roughen it. Occasionally, it is machined to provide a still rougher, interlocking surface. Additionally, steel workpieces are sometimes plated with nickel, chromium, nickel-aluminum or molybdenum to provide better adhesion of the sprayed-on material. There is some porosity in the coatings, usually about 6 to 13 percent. One drawback of the process is the limited bonding strength of the coating, typically about 5000 psi (35 MPa). Fig. 8F4a illustrates the workings of a wire metalizing gun. For jobs requiring greater deposition rates or large surfaces, guns are available to handle deposition materials in rod form up to about 3/8 inch (9.5 mm) in diameter.

F4a1. ***electric arc wire metalizing*** - has no external heat source. Two wires are used as shown in Fig. 8F4a1. Each wire is electrically charged and the two charges are of opposite polarity. The wires are fed so that their ends come together, creating an arc that heats and melts the wires. A central air jet propels the molten metal to the workpiece. This method provides good bond strengths with less heating of the substrate than with gas flame atomizing. There is no cost for fuel gas or inert gas. However, the method is limited to ductile materials; wires of carbides, oxides and nitrides are not sufficiently ductile. A common application is zinc coating for corrosion resistance.

F4b. ***powder spraying*** - is a variation of wire spraying. It is performed in the same way, except that the material to be applied is fed to the gun in powder rather than wire form. Gravity or pressure may be used to move the powder which is supported in a gas carrier. An advantage of using powder is that materials like ceramics, cermets, carbides and oxides, which are difficult to fabricate into wire, can be fed easily. Additionally, the size of the droplets of coating material is determined by the particle size of the powder rather than the degree of atomization provided by compressed air or gas. With some applications and coating alloys, it is necessary to postheat the workpiece after coating to fuse the coating material. See Fig. 8F4b.

F4c. ***detonation gun spraying*** - involves the repeated detonation of a mixture of fuel gas, oxygen and nitrogen to which coating material in powder form has been introduced. The powder is expelled at high velocity toward the workpiece. The gun has a long barrel to confine and direct the powder. The detonation repeats 4 to 8 times per second. The powder being expelled has an explosive velocity that causes it to be further heated when it strikes the workpiece, providing a strong metallurgical and mechanical bond. Bond strength is considerably better than with conventional powder spraying and porosity is greatly diminished. These factors enhance wear resistance. Because of

Next Page

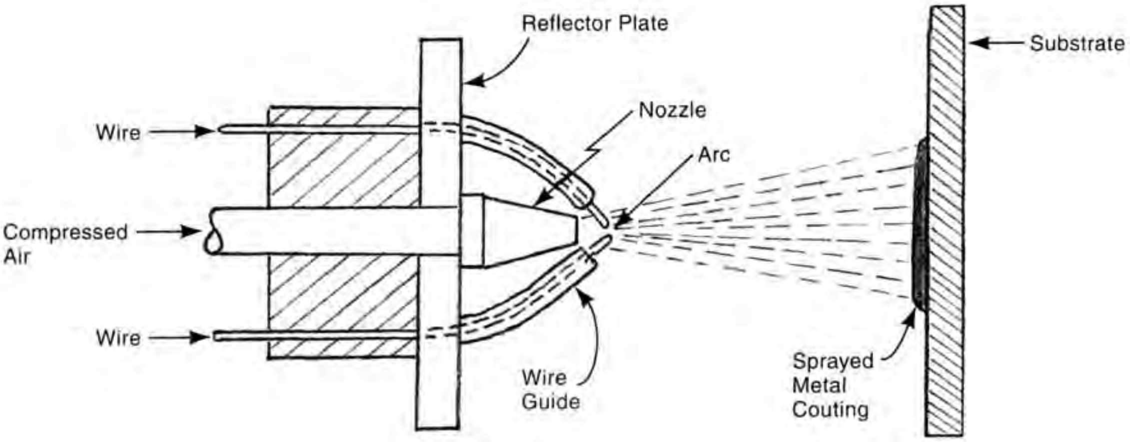

Fig. 8F4a1 Electric arc wire metalizing.

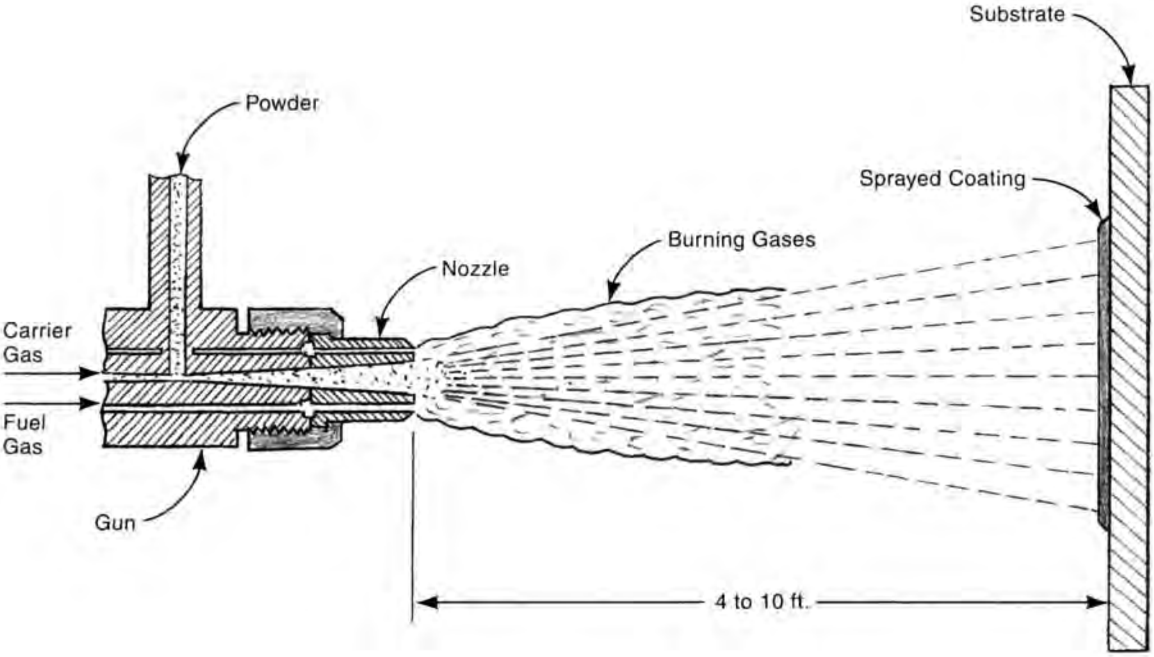

Fig. 8F4b Cross section of a typical gun for thermal spraying powdered metals, ceramics, cermets and carbides to a metal workpiece surface.

the extreme noise of the operation, it is performed within a soundproofed chamber. The operator remains outside the chamber but controls both the workpiece movement and the gun operation. Typical coating depths are 0.005 to 0.010 in (0.13 to 0.25 mm) but can be as much as 0.030 inch (0.8 mm). A cooling system may be used to avoid overheating the workpiece. Tungsten carbide, aluminum oxide and chromium carbide are sprayed with this method which is normally limited to metal substrates because of the force of the explosively driven powder. The prime applications are wear resistant coatings, particularly when conditions are severe. The method is illustrated in Fig. 8F4c.

F4d. ***plasma arc spraying*** - uses a direct current arc, similar to a welding arc, to heat a gas. The gas is constricted at the arc, further increasing its

Previous Page

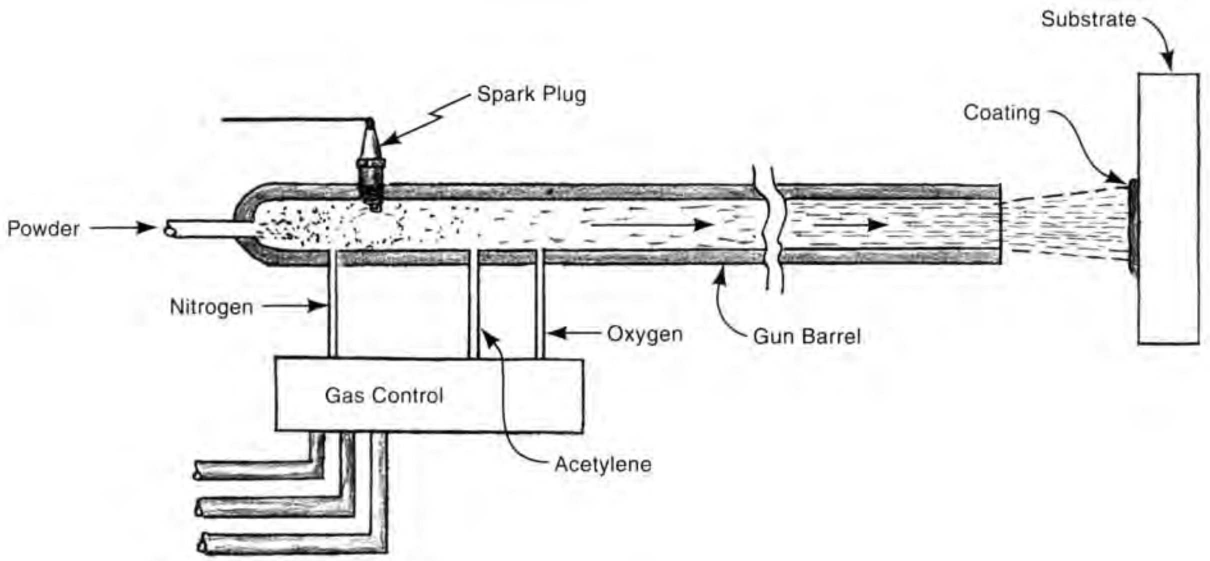

FIG. 8F4c detonation gun powder spraying. Because of extreme noise from repeating detonations, the operation is performed in a soundproof chamber.

temperature to 10,000°F (5500°C) or above. The gas becomes ionized at that temperature and streams from the nozzle of the gun as a plasma. As it exits, powder is added to the stream. The gas used is argon or nitrogen in combination with hydrogen. The powder achieves high velocity as it melts and strikes the workpiece surface, producing a coating with much less porosity than conventional wire or powder spraying. Adhesion is also very good. The process can be used to apply materials with melting points up to 6000°F (3300°C). Ceramics, intermetallics, cermets, carbides, refractory metals and plastic materials as well as other metals and alloys can be deposited. A wide variety of metallic and nonmetallic substrate materials can be coated with the process. Fig. 8F4d illustrates the operation of a typical plasma gun.

F4d1. A process variation, ***transferred plasma-arc spraying***, uses a second arc current

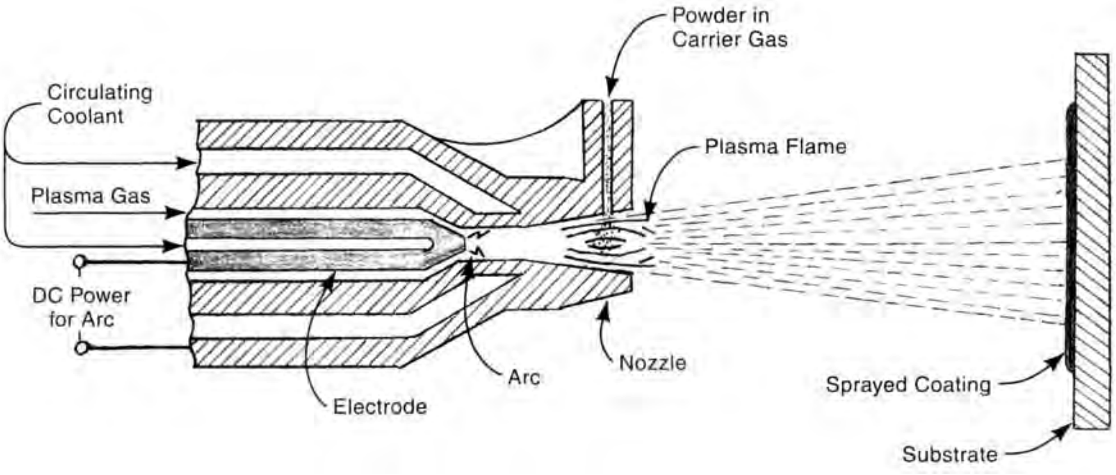

Fig. 8F4d Plasma arc metalizing.

between the spray gun and the workpiece. This arc heats the workpiece, aiding the coating process so that thicker, denser, coatings are feasible with good metallurgical bonding. Less costly powders of larger particle size and wider size distribution can be used. Electrical power requirements are also reduced. However, the workpiece must be conductive and able to withstand some melting. Coatings on plowshares, digging machinery, and valve seats are typical applications.

F4e. ***high velocity oxy-flame coating (HVOF)*** - is another process that uses coating material in powder form. The oxy-fuel mixture (oxygen plus acetylene, propane, hydrogen or MAPP) is ignited in a high pressure chamber where it attains a temperature of about 3800°F (2100°C). (In some applications a mixture of liquid kerosene and air is used.) The resulting gas stream exits through a small-diameter orifice traveling at a supersonic speed of over 1000 ft/s (300 m/s). Powder is injected, usually axially, into the stream which melts the particles and propels them against the workpiece. Dense, well-bonded coatings result; they have superior wear resistance. Metals, cermets and ceramics can be coated with the process, which is now widely used. Coatings for wear resistance are a prime application. Fig. 8F4e shows the HVOF operation.

F5. ***clad metals*** - (See 7C13d.)

G. Heat Treating of Metals

G1. ***annealing*** - is a general term for the softening of metals. It usually involves heating the workpiece to a suitable temperature, holding it at that temperature for a prescribed time and then cooling it at a particular rate. The specific temperature, holding time, cooling rate and other process details depend on the metals involved and the purpose of the annealing operation. Annealing reduces the yield strength and hardness of the workpiece material, removes or reduces internal stresses, reduces segregation, restores ductility, refines grain size and modifies electrical and magnetic properties. Subsequent forming and machining operations can then be performed more easily. With steel, the heating is to a point above the austenitizing temperature, the temperature at which the material's structure starts to change, and holding that temperature until the transformation is complete. The workpiece is then slowly cooled to room temperature. When the term, "annealing", is applied without qualifying adjectives to ferrous metals, it usually refers to full annealing as described below. For the descriptions that follow, as applicable to ferrous metals, refer to the iron-carbon phase diagram in Fig. 8G1 which shows the transition lines between different states in standard terms.

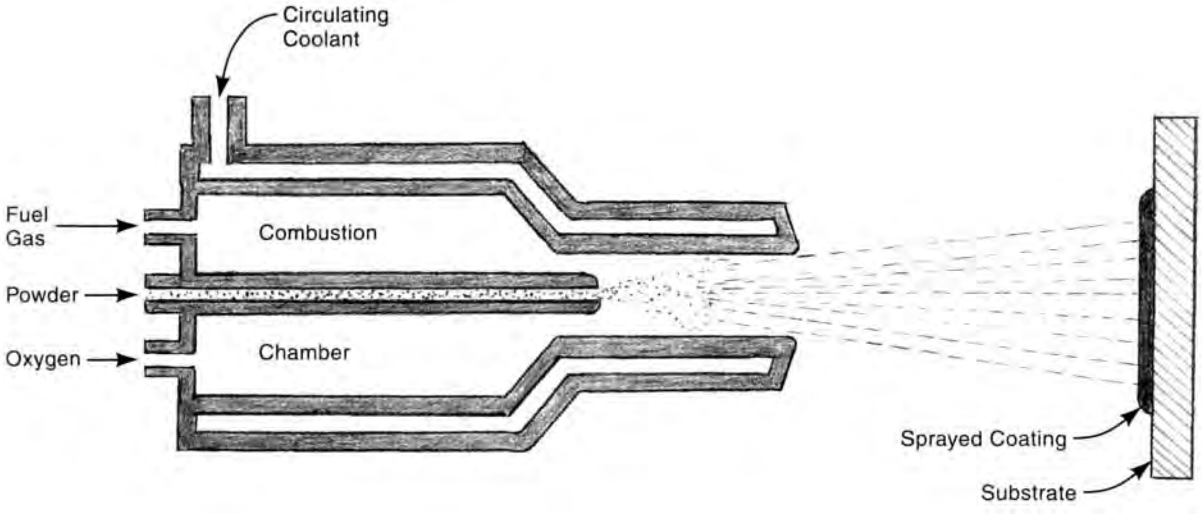

Fig. 8F4e High-velocity oxyfuel (HVOF) powder spraying.

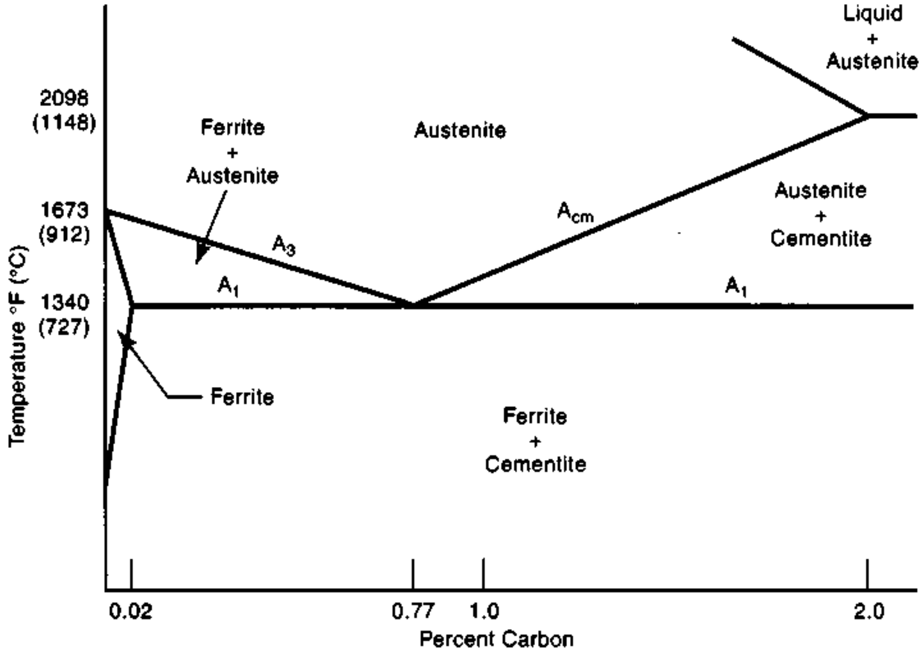

Fig. 8G1 A phase diagram for steels. The diagram, simplified, shows structures that develop in steel at different levels of carbon content and temperature. The lines show the transition temperatures from one type of structure to another.

G2. *annealing processes for steel*

G2a. ***full annealing***[1,2] - For hypoeutectoid steels, those with less than 0.77% carbon, the workpiece is heated to point 50 to 100°F (30 to 55°C) above the critical temperature (A_3 in Fig. 8G1). That temperature is maintained until it is uniform throughout, and the structure is converted to single-phase homogeneous austenite. The workpiece is then cooled slowly in the furnace. The cooling rate must be controlled and slow enough so that the declining temperature is approximately the same throughout the workpiece. The controlled cooling continues until the workpiece temperature is at least 50°F (30°C) below the A_1 line. Fig. 8G2a shows a temperature-time diagram of the process. Full annealing removes existing internal stresses in the workpiece and all traces of the previous structure, replacing it with a crystalline structure primarily of coarse pearlite, providing a softer, ductile metal.

For hypereutectoid alloys, those with greater than 0.77% carbon, the process is basically the same. However, the heating is to a slightly lower temperature, about 50 to 100°F (30 to 55°C) above the A_1 line. This, again, results in a soft, ductile primarily pearlitic structure.

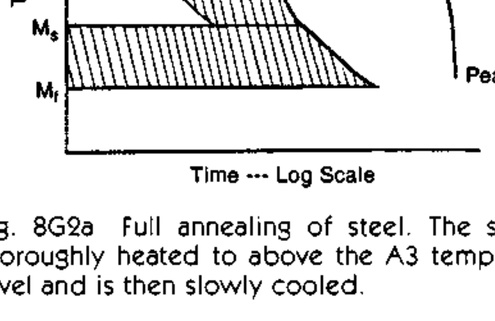

Fig. 8G2a Full annealing of steel. The steel is thoroughly heated to above the A3 temperature level and is then slowly cooled.

G2b. ***isothermal annealing***[2] - Fig. 8G2b illustrates the time-temperature curve for this process. Initial heating and temperature holding are identical to that for full annealing but, once the structure becomes fully austenitic, the metal is quenched rapidly to a temperature below that of the A1 line where the structure changes to a relatively soft ferrite carbide aggregate. The temperature is then held for a period (normally several hours) while the austenite completely transforms to pearlite. After the transformation is complete, the workpiece can be cooled further in any manner. This process shortens the time required compared to full annealing and is less costly. It provides a more uniform structure than full annealing but accurate temperature control is more critical. The fineness of the pearlitic structure depends on the transformation temperature used.

G2c. ***spherodizing*** - is an annealing process that has the purpose of producing a structure in which cementite is in the form of small spheroids dispersed in a ferritic matrix. The process is used to improve the cold formability of steels but is especially useful in providing improved machinability for hypereutectoid and tool steels. There are several ways to produce this structure. In one method, the workpiece is slowly heated to a temperature just below the critical level (A_1 in Fig. 8G1), held there for a prolonged period and then slowly cooled. In another method, the workpiece is alternatively heated and cooled to temperatures just above and just below the critical level (A_1). A third method, used for tool and high alloy steels, is to heat them to a temperature of 1400 to 1500°F (750 to 815°C) or higher, maintain them at that temperature for several hours and then slowly cool them.[1]

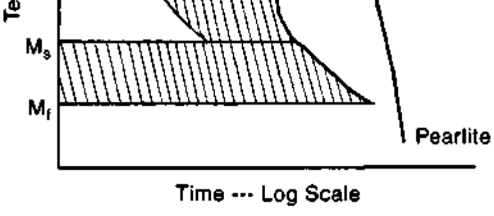

Fig. 8G2b Isothermal annealing of steel provides a more uniform structure than full annealing, but the temperature controls are more critical.

G2d. ***stress relieving*** - is accomplished by heating the workpiece uniformly to a suitable temperature below the A_1 (Fig. 8G1) critical temperature. (This is the temperature at which the material's structure changes.) This temperature is maintained for a predetermined period and the workpiece is then cooled gradually and uniformly to room temperature. The purpose of stress relieving is to relieve the stresses that are developed in the workpiece when forming, machining and other operations are performed on it, without greatly affecting other properties. Rolling, casting, forging, shearing, bending, drawing and particularly welding are sources of residual stresses that may have to be relieved. Uniform heating and cooling during stress relieving are important to avoid inducing new residual stresses.

G2e. ***normalizing*** - The workpiece is heated to a temperature 100°F (55°C) above the A_3 level (Fig. 8G1) if the material is hypoeutectoid (less than 0.77% carbon) or above the A_{cm} level if the material is hypereutectoid (0.77% or greater carbon), and maintained at this temperature until a uniform austenitic structure is formed. The workpiece is then removed from the furnace and allowed to cool in still air. The careful cooling rate of other annealing processes is not maintained. However, the resulting structure is usually fine pearlite with an excess of ferrite or cementite. The exact structure tends to vary within the workpiece and depends on the cooling rate at each point of the workpiece which, in turn, depends on the shape and size of the workpiece. Nevertheless, the process is useful when maximum softening is not required and the cost and time required for the operation need to be kept at a minimum. Normalizing is also used when the part needs to be harder and correspondingly stronger than it would be if annealed. Machining may be more easily performed on some materials when normalized instead of annealed. Air hardening tool steels are not subjected to this process.

G2f. ***tempering*** - is performed on through-hardened steel parts that may be too brittle for use after the hardening operation. The part is heated to a temperature below the critical temperature and is then air cooled. Usually, the part is held at the desired temperature only long enough to ensure that it is uniformly heated. Higher temperatures and longer times at the elevated temperature produce increased softness and ductility in the part. The operation reduces residual stresses in the part from the hardening operation and increases its toughness.

G2g. ***process annealing*** - is performed on workpieces that are to undergo further cold-working operations. Its purpose is to relieve stresses caused by cold-working and to restore ductility when workpiece material has work hardened. The workpiece is heated to a temperature just below the critical level (not as high as in full annealing or normalizing), held at that temperature for a period and then cooled slowly. The process is less costly and produces less scale than full annealing or normalizing. Process parameters may vary from case to case, depending on what is necessary to permit whatever further cold-working is required. Wire parts that require further drawing or upsetting and sheet metal parts requiring deep drawing are commonly process annealed.

G3. ***hardening processes for steel*** - require that the material to be hardened be heated above the austenitizing temperature [100 to 200°F (55 to 110°C) above the A3 line in Fig. 8G1]. The material is held at that temperature and then rapidly cooled (quenched). The length of holding time at that high temperature and the cooling rate depend on the particular steel alloy involved. Hardness is chiefly determined by the carbon content and the depth of the hard zone is affected by alloying elements and the hardening method used. Further heating and cooling may be undertaken after hardening to modify the metal structure. Various methods are used for both surface and through hardening of steel depending on the results desired and the alloy involved.

G3a. ***surface hardening*** - has the purpose of providing a wear resistant surface to a part while retaining a tougher, fracture-resistant core. Two basic methods are used to achieve this structure: 1) selective heating processes that heat only the surface material followed by quenching. The hardness of the finished workpiece surface depends on the carbon content of the workpiece and the method of quenching. With some authorities, the term "surface hardening" refers only to these processes. 2) processes that alter the chemistry of the surface material. Usually, these processes are referred to as "case hardening". Higher initial carbon content is not required in the workpiece with these methods. They may involve the use of hazardous gaseous, liquid or solid materials.

G3a1. ***flame hardening*** - uses an oxy-acetylene flame to heat the surface of the workpiece. The flame source is of high intensity and heating is rapid. It continues to the point where the surface material changes to austenite but the core material remains below the critical temperature. The workpiece is then immediately quenched in water and tempered. By carefully controlling the flame intensity and duration of heating, the depth of heating and eventual hardness can be controlled. The depth of the hardness typically ranges from about 0.030 to 0.250 in (0.75 to 6 mm). The process is often utilized with large workpieces that require wear resistance only in certain areas and where furnace treating would require extra large equipment that may not be available.

G3a2. ***induction hardening*** - uses induction heating to produce high temperatures at the surface, or in those areas requiring hardening. As with other processes requiring induction heating (See 7A2h, 7B4 and 7C2.), an electrical coil must be designed and fabricated to produce the heating effect in the desired location. The process is well suited for surface hardening because the depth and location of the treatment can be controlled by establishing the optimum heating time, current, frequency, power level and coil configuration. (Higher induction frequencies concentrate the heating effect more at the surface and produce shallower hardened cases; lower frequencies produce deeper hardening or even through-hardening.) After the heating cycle, which is quite rapid, the workpiece is immediately quenched. Round and cylindrical workpieces are most easily processed since simple coil shapes can be utilized. Shaft and crankshaft bearing surfaces are frequently surface hardened by induction heating. Vehicle and machine shafts and hydraulic piston rods are typical parts treated by induction hardening for improved wear resistance and fatigue life. When the operation is automated, the shafts pass through the induction coils in a timed cycle and are immediately spray quenched when they exit the coils.

G3a3. ***laser-beam hardening*** - is a surface hardening technique for ferrous materials that uses laser energy to provide localized surface heating. The workpiece is typically coated first with a material with a more light-absorptive surface. Manganese phosphate and zinc phosphate are two commonly used surface coating materials. Laser parameters, such as beam size, power level, and beam movement speed as the surface is scanned, can be set to provide optimum heat input and to limit heating to only the surface of the workpiece. Laser beams for heat treating are usually more broadly focused than those used for metal cutting or welding. However, heating is rapid and the process can be very selective as to surfaces treated. The surface is heated to the austenitizing temperature, and quenching then forms hard martensite. Both water and oil quenching can be used but quenching often results simply from conduction of heat from the surface to the colder interior of the workpiece. Surface hardness up to Rc65 is feasible in steel of 0.40% carbon.[1] The process is readily adaptable to computer control. It is used to improve the wear resistance and fatigue strength of highly-stressed machine components such as gear teeth, cams, and crankshaft surfaces.

G3a4. ***electron-beam hardening*** - is similar to laser-beam surface hardening. In both processes, a high-energy beam is focused accurately to rapidly heat selected surface areas of the ferrous workpiece for hardening. The surface metal is heated to the austenitizing range and is then quenched to form martensite as the heat is conducted throughout the workpiece and the surface cools. In electron-beam heating, a stream of electrons from a heated cathode forms the beam that is directed by means of electromagnetic and electrostatic elements. The process is carried out in a partial or complete vacuum. The need for a vacuum lengthens the process and limits the size of the workpiece that can be processed. Typical hardened depths range from 0.01 to 0.04 in (0.25 to 1 mm)[5]. Electron-beam equipment is costly.

G3a5. ***other surface heating methods for hardening*** - Molten salt or lead baths can be used to heat workpieces rapidly enough so that only the surface - to the desired depth - is heated to the transformation temperature. Another approach is to use an electric arc lamp for selective heating of a workpiece. Higher heat intensities can be obtained with these methods than with flame heating and the heat source can be farther away, leading to less distortion from the process and easier heating of irregular surfaces. Very high arc powers are required.

G3b. ***case hardening*** - hardens a layer (usually a thin layer) of material at the surface of the workpiece. Carbon and/or nitrogen are first diffused into the workpiece surface at an elevated temperature. Although the entire workpiece is heated, the interior of the workpiece, not having received these hardening agents, does not harden but retains its toughness; only the exterior *case* is hardened. Case hardening is suitable for parts made from low-carbon steels. This is in contrast with the surface hardening methods described above which rely on the carbon already in the steel to provide the necessary hardness. There are a number of case hardening processes, all somewhat similar, described below.

G3b1. ***carburizing*** - is the oldest case hardening method, commonly applied to low-carbon steel workpieces. They are heated to above the transformation temperature range while in contact with a carbon-containing material in gaseous, liquid, or solid form. The carbon is absorbed by the workpiece material and the outer surface thus becomes high-carbon steel. Workpieces are then either quenched or slowly cooled and further heat treated, depending on the application and the initial grade of steel. The depth of the case depends on the time and temperature of the carbon absorption operation. The three approaches are illustrated in Fig. 8G3b1.

G3b1a. ***pack carburizing*** - utilizes a solid material as a carbon source. The workpiece is placed in a closed container along with charcoal, coke or other carbonaceous material. Heating takes place over an extended period during which the hot

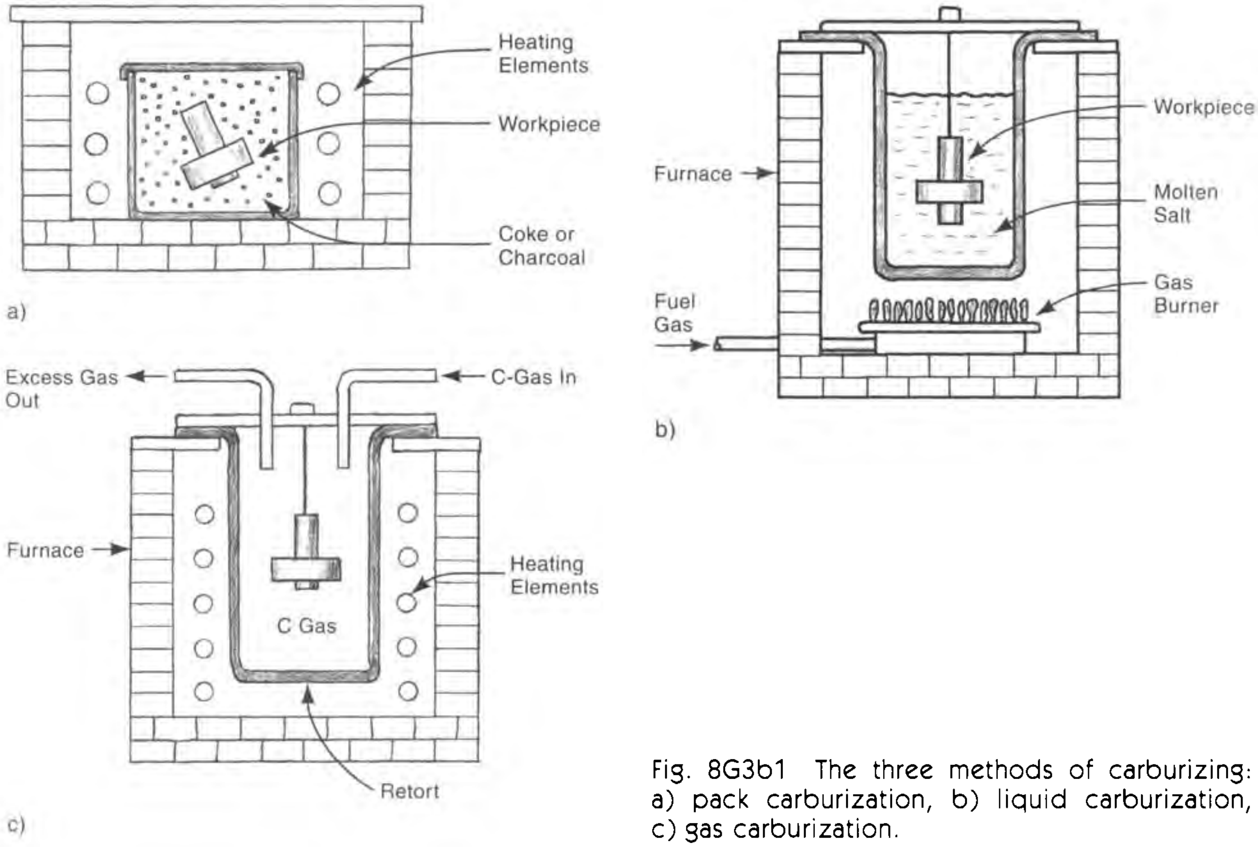

Fig. 8G3b1 The three methods of carburizing: a) pack carburization, b) liquid carburization, c) gas carburization.

carbonaceous material gives off carbon monoxide gas. This reacts with the workpiece metal, releasing carbon that is absorbed by the workpiece surface. Carbon content typically ranges from 0.7 to 1.2% and case depths from about 0.003 to 0.35 in (0.8 to 9 mm) but a depth of 0.06 in (1.5 mm) or less is most common.[1] Pack carburization requires less specialized techniques and less sophisticated equipment than the other two alternatives but is not as well suited for high-production applications.

G3b1b. ***liquid carburizing*** - utilizes a molten salt bath instead of solid material. This provides more uniform heating and easier handling of the workpiece, particularly if automatic operation is involved. Cyanide has been a common salt bath material, providing both carbon and nitrogen infusion, but safety concerns have limited its use. Some non-cyanide materials have been developed as a substitute. Case depths with liquid carburizing are usually thin and the process is used mostly for small and medium-size parts. The process is faster than pack carburizing and is adaptable to workpieces of various shapes and various case depths.

G3b1c. ***gas carburizing*** - is carried out with a carbon-carrying gas instead of liquid or solid material. Usually, natural gas, propane or a mixture of carbon monoxide, nitrogen and hydrogen is used. Gas carburization provides a more controllable process that is also faster and more easily automated since continuous furnaces can be used. However, special precautions must be taken because of the toxicity of carbon monoxide, a critical element of the gases used. Case depths up to 0.4 in (10 mm) are feasible, but shallower case depths, of 0.005 to 0.030 in (0.13 to 0.75 mm), are common. The process is usually used for small parts which can be quenched immediately upon exiting the heating furnace.

G3b2. ***carbonitriding*** - In this process, the workpiece is heated in an atmosphere containing nitrogen and carbon. Ammonia, in a mixture with a carbon-rich gas, is normally used. Heating is to a temperature above the critical range. As the workpiece is held at that temperature, it absorbs nitrogen and carbon. It is then quenched. A wear-resistant case depth of 0.003 to 0.030 in (0.08 to 0.75 mm) results. The process develops less distortion than carburizing. It is useful for less costly steels, providing properties equivalent to those obtained when carburizing more expensive alloy steels.

G3b3. ***cyaniding*** - This process is sometimes referred to as ***liquid carbonitriding***. It involves immersion of the workpiece in a bath of molten cyanide salts to heat them to a temperature at which austenite begins to form . Typical immersion periods are one half to one hour at that temperature. Nitrogen, produced as the cyanide bath decomposes, and carbon enter the surface of the workpiece. Immersion in the bath is immediately followed by oil or water quenching. The case hardened surface thus produced contains iron nitrides and carbides and has high hardness and good wear resistance. The case is typically 0.005 to 0.015 inches (0.13 to 0.38 mm) deep. The process is most commonly used to case harden small parts. Potentially serious hazards attend the use of the cyanide baths because of the poisonous nature of cyanide.

G3b4. ***nitriding*** - consists of heating the workpiece in an atmosphere of ammonia or other gas containing nitrogen. The process is limited to alloy steels that have the capability of absorbing nitrogen. Upon prolonged heating (20 to 100 hrs) at temperatures from 925 to 1050°F (500 to 565°C)(below the transformation range), the workpiece absorbs nitrogen from the gas and forms nitrides which provide the necessary hardness. Special steels have been developed to facilitate nitriding. Quenching is not required.

Hardenable steels to be nitrided are first hardened and tempered. Normalizing may also precede the nitriding operation if workpiece sections are large. Decarburized material must be removed before nitriding and thorough workpiece cleaning is also important before the operation. Nitriding produces very hard cases and little workpiece distortion. Case hardened depths typically range from 0.008 to 0.30 in (0.20 to 7.5 mm). This process also provides improved wear and corrosion resistance and lessened possibility of galling or fatigue failure.

G3b5. ***liquid nitriding*** - involves immersion of the workpiece in a bath of molten cyanide salts instead of a gas atmosphere. The operation takes place at the same temperature (below the transformation range) as when a gas atmosphere is used. It produces a thinner case than gas nitriding, with depths from 0.001 to 0.012 in (0.03 to 0.30 mm) but with results and applications that are otherwise similar. Liquid nitriding provides more nitrogen and less carbon to the workpiece than similar processes, liquid carburizing and cyaniding, which also use baths of molten cyanide salts.

G3c. ***through hardening*** - provides a hardened structure throughout the workpiece. There are a number of processes for through hardening that involve heating the workpiece to a temperature above the critical temperature, holding it at that temperature until it is uniformly heated, and then quenching it, (cooling it rapidly). The quenching medium can be water, oil, or air, depending on the alloy being treated and the size and shape of the part. Tempering normally follows the hardening operation.

G3d. ***martempering*** - is a hardening process that provides uniform hardness throughout the part and a minimum of residual stress and distortion. The heated workpiece is quenched with a hot fluid (molten salts, hot oil, fluidized particle bed, or molten metal), at a temperature above the martensite range. The workpiece is held in the quenching liquid until the temperature throughout is essentially uniform. The workpiece is then cooled at a moderate rate, usually in air, to prevent large temperature differences between its outside and internal portions. Straightening or forming, if required, can be performed while the workpiece is still hot. Conventional tempering then always follows. Fig. 8G3d shows the temperature transformation diagram for martempering.

G3e. ***austempering*** - is a means for hardening a workpiece while retaining ductility and toughness. The steps are as follows: The workpiece is heated to a temperature within the austenitizing range, normally 1450 to 1680°F (790 to 915°C). It is then quenched in a bath - usually molten salt - whose temperature is in the range of 500 to 750°F (260 to 400°C). The workpiece is left in this bath

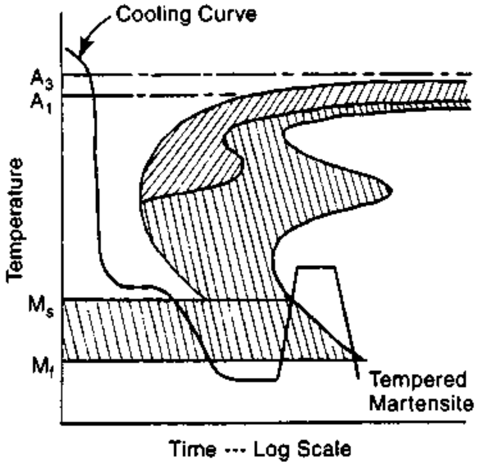

Fig. 8G3d Martempering of steel, a hardening process that provides uniform hardness throughout the part.

long enough for the structure to transform isothermally to bainite. It is then cooled to room temperature. Fig. 8G3e illustrates the time-temperature cycle for austempering[1].

G4. *solution treating/precipitation hardening (aging or age hardening)* - is normally a three-step process, most commonly performed in sequence. The operation is prominent with non-ferrous metals. The first step, *solution treatment*, involves heating the workpiece material, which contains some alloying elements, thoroughly to a temperature just below the eutectic melting temperature. At this temperature, alloying constituents become uniformly dispersed in a solid solution. The second step, *quenching*, preserves the solution in a supersaturated solid state because the alloying constituents do not have time to precipitate. In the third step, *precipitation hardening*, which often involves heating the workpiece to a lower temperature for a period of time, alloying constituents precipitate throughout the workpiece in a dispersed arrangement. They form particles at the grain boundaries and slip planes which reduce slippage, producing increased hardness and strength. With some alloys, the precipitation occurs over a period of days at room temperature. The precipitation hardening step is often referred to as aging, age hardening or artificial aging (if performed at an elevated temperature).

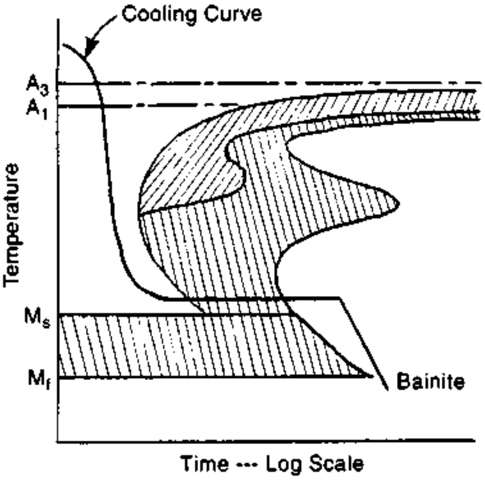

Fig. 8G3e Austempering is a means for providing hardness in a steel part while retaining ductility and toughness.

Solution treating/precipitation hardening or aging are commonly used on aluminum, copper, nickel, magnesium, titanium, zirconium, and their alloys, and on heat-resistant alloys. Fig. 8G4 illustrates a simplified diagram for aluminum-copper alloys and illustrates how temperature levels govern the operation.

Semiaustenitic stainless steels are hardened by this method and are solution treated by first heating, e.g., to 1900°F (1040°C), and then quenching in air to put the material in the solution-treated condition. Precipitation hardening is then performed by heating the workpiece to a subcritical temperature range, i.e., 900 to 1150°F (480 to 620°C). This treatment provides tensile strengths up to 190,000 lbf/in^2 (1310 MPa).

G5. *heat treating processes for non-ferrous metals*

G5a. *aluminum alloys* - are ***hardened*** by solution treating followed by quenching, and a precipitation phase of the alloying element. Several of these hardening elements (e.g., copper) are much more soluble at elevated temperatures than at room temperature so the hardening process first involves a heating and soaking phase. The temperature and duration of the heating phase vary with the alloy being treated, the size and thickness of the workpiece, and whether it is wrought, forged or cast. Typical solution treating phases involve heating to

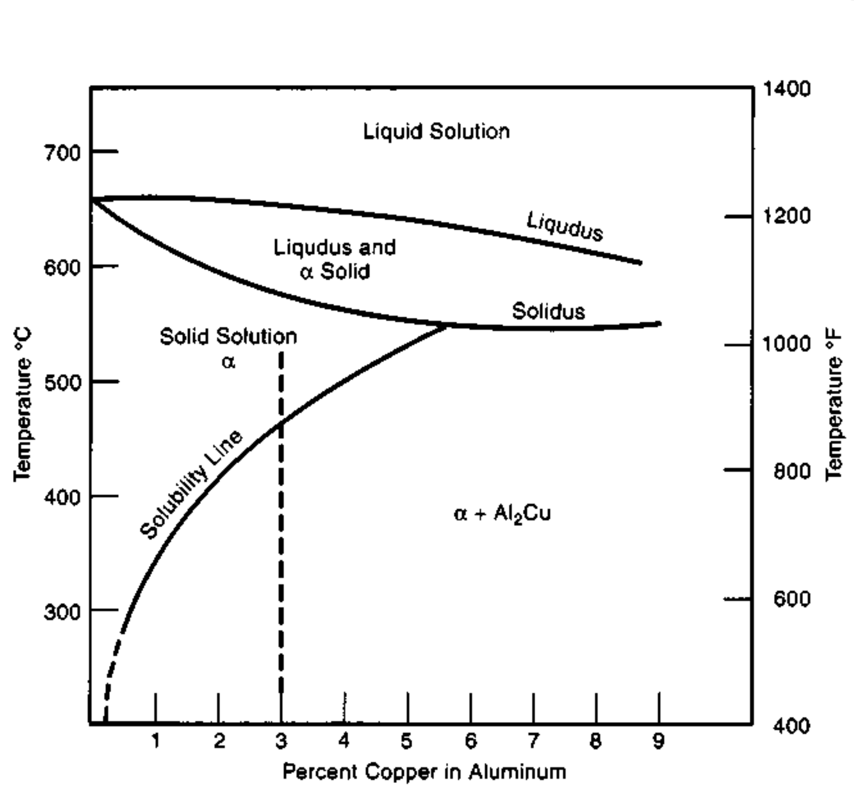

Fig. 8G4 Simplified diagram for aluminum-copper alloys. Note the alloy containing 3% copper. At a temperature above the solubility line at about 900°F, the copper goes into solution. If the workpiece is rapidly quenched to a lower temperature, the copper is held in a supersaturated solution. Then, at 400°F or lower, the copper will gradually precipitate as fine particles which enhance hardness and strength of the alloy.

a temperature between 870 and 1055°F (465 and 570°C) and soaking at that temperature for a period that may be as little as 20 minutes and as much as 75 minutes. (if in an air furnace. Salt bath soaking times are shorter.) Time is required to heat the workpiece uniformly and to allow the hardening element to go into full solution. The soaking temperature must not be so high that eutectic melting takes place at the interface of the aluminum and the alloying element. The allowable temperature range may be quite narrow, typically ±10°F (5.5°C). After soaking, the workpiece is immediately quenched, usually in water below 100°F (38°C). The quick quenching prevents the rapid precipitation of the hardening element, which is not desirable. Instead, precipitation is allowed to take place at room temperature for as much as a month or more, or at an elevated temperature of up to 400°F (200°C) over a period of several hours. This provides stability of the properties resulting from formation of finely dispersed precipitates. (Fig. 8G4 shows the diagram for aluminum-copper alloys.)

Annealing of aluminum alloys requires a heating phase at a temperature that may be as low as 500°F (260°C) or as high as 775°F (410°C) followed by slow cooling to about 500°F (260°C). Times and temperatures depend on the alloy type, temper and initial structure. Stress-relief annealing uses the lower temperatures of this range for shorter periods; full annealing utilizes the higher temperatures and some holding period at the specified temperature before slow cooling. Full annealing requires closer control over both the temperature and the heating period.

G5b. ***copper and copper alloys*** - may undergo the following treatments: annealing, stress relieving, solution treating and precipitation hardening (aging). Both furnace and salt bath methods are used to provide the necessary heating. A protective atmosphere is commonly employed to prevent tarnish of the workpiece. Normally, the atmosphere is either an exothermic (reducing) gas or dissociated ammonia.

Annealing is performed on wrought alloys to produce a desirable combination of ductility and strength for cold forming operations. It is accomplished by heating the workpiece to an elevated temperature for a period of time. Temperatures used range from 500 to 1500°F (260 to 815°C) but most alloys fall into the range of 700 to 1200°F (370 to 650°C). The temperature must be sufficient to cause recrystalization and, if desired, is brought to higher levels to cause grain growth. Heating and cooling rates tend to be relatively unimportant.

Stress relieving reduces the tendency of formed copper alloys to crack from stress corrosion. The intent is to relieve internal stresses without affecting the workpiece properties to an appreciable degree. Treatment involves heating to a particular temperature that depends on the alloy involved, the workpiece shape and the extent of existing stresses. Temperatures range from 355 to 970°F (180 to 520°C) with most alloys falling closer to the middle of that range.

Solution treating/precipitation hardening is the hardening treatment for most copper alloys, though some are hardened by quenching from a high temperature to produce a martensitic-like effect[7]. Except for those alloys, solution treating involves temperatures in the range of 1400 to 1830°F (760 to 1000°C) for 1 to 5 hr., followed by a water quench, and precipitation hardening at a temperature in the range of 575 to 1400°F (300 to 760°C). Specific values depend largely on the alloy involved. Alloys for electrical applications are commonly solution treated if spring action or other hardness is required.

G5c. ***magnesium alloys*** - may receive the following treatments: solution heat treating, precipitation hardening (artificial aging), annealing, and stress relieving. These alloys are treated to improve strength, toughness and other mechanical properties or to condition the metal for further operations.

Annealing removes strain hardening and temper resulting from previous treatments. Wrought workpieces are heated to a temperature of 550 to 850°F (290 to 450°C) for one hour or more and are then fully annealed. (The particular temperature used depends primarily on the alloy involved.) Since most forming of magnesium is performed at an elevated temperature, there is less need for annealing than is required with many other metals.

Stress relieving is carried out to reduce or remove residual stresses that result from forming operations, welding, casting, machining, extrusion or other operations. Typically the workpiece is heated to an elevated temperature somewhat below that required for annealing and holding the workpiece at that temperature for 1/2 to 2 hours. The time and temperature used depend on the alloy and the nature and strength of the residual stresses. For example, forgings have higher residual stresses than rolled sheet and require higher temperatures. Stress relieving temperatures range from 300 to 800°F (150 to 430°C).

Solution heat treating and precipitation hardening (aging) are carried out to improve strength, toughness and shock resistance. The full process involves solution treating at temperatures to a point within the range of 725 to 1060°F (385 to 570°C) for a period of 2 to 72 hours. Aging also takes place at an elevated temperature of 335 to 480°F (170 to 250°C) for from 5 to 48 hours. Time and temperature depend chiefly on the alloy and the results desired. Magnesium castings may be supported during elevated-temperature heating to prevent sagging. Flat parts may also need support and straightening after the treatment.

G5d. ***nickel and nickel alloys*** - are subjected to solution treating, age hardening, annealing, stress relieving and stress equalizing.

Solution treating is not usually required before precipitation hardening but is used in some circumstances to provide special properties such as hardness at high temperatures. When used, it takes place at temperatures of 1525 to 2260°F (830 to 1240°C) to put carbides and age hardening elements into solid solution. Solution treating, when carried out, is normally part of the age hardening treatment. However a high temperature solution treatment at 2100 to 2400°F (1150 to 1315°C) is also part of a solution annealing process.

Age (precipitation) hardening produces a precipitation of submicroscopic particles throughout the base metal, increasing both its strength and hardness. Solution treating beforehand is normally not required as it is for other alloys. Age hardening is commonly performed by heating the workpiece to a temperature of 900 to 1600°F (480 to 870°C) and holding at that temperature for a long period, followed usually by furnace or air cooling. The operation can proceed after hot or cold working, or with the workpiece in an annealed condition. The operation is sometimes performed in a dry hydrogen or ammonia atmosphere or with the workpieces in a sealed box in the furnace.[7]

Annealing requires heating to a prescribed temperature, usually one between 1300 and 2200°F (700 and 1200°C) for a period of time and then cooling at a slow or rapid rate. A recrystallized grain structure results and the workpiece material is softened. Heating and cooling parameters depend primarily on the nickel alloy involved and the degree of hardness before annealing. Annealing is common after cold forming operations that work harden the material. Sometimes, annealing is an in-process operation between successive cold forming stages. Heating may take place in the protected atmosphere of a furnace or in a salt bath.

Stress relieving is a treatment that does not result in recrystalization but it does reduce the stresses in non-age-hardenable alloys that have work hardened. Temperatures used range from 800 to 1600°F (425 to 870°C), depending on the nickel alloy involved, and the degree of work hardening. Careful temperature regulation is required. Cooling is most commonly by air but water quenching is used for Hastelloys.

Stress equalizing is a low-temperature operation. It is used to balance the residual stress after cold working without a significant loss of mechanical strength. The workpiece is heated to a specific temperature between 450 and 900°F (230 and 480°C) for one or more hours and then air cooled. The temperature used depends on the alloy involved. Coil springs and stampings with spring effect are given this treatment.

G5e. ***titanium and titanium alloys*** - are treated to relieve residual stresses developed in fabrication operations, to improve workability or machinability or to increase fatigue strength, creep strength and toughness. Stress relieving, annealing and solution treatment, and aging are the most common operations.

Stress relieving involves heating to a point in the 750 to 1500°F (400 to 815°C) range for a period of time that may be a little as 1/4 hr. and as much as 48 hr. Time and temperature vary with the alloy. Higher temperatures allow shorter holding times. The operation is performed to lessen residual stresses from previous operations without significantly reducing strength and ductility.

Annealing requires somewhat higher temperatures than stress relieving. Titanium and its alloys are heated to a temperature in the range of 1200 to 1650°F (650 to 900°C) for a period of 1/10 to 8 hours and then are cooled in air, in the furnace, or at particularly slow rates. Specific conditions for heating and cooling depend on the alloy and the purpose of the annealing. Annealing provides improved toughness, ductility, machinability, and/or dimensional and structural stability at elevated temperatures.

Solution treating and aging first require that the workpiece be heated to a point within the range, 1275 to 1940°F (690 to 1060°C) for a period of a few minutes up to 2 hrs. Quenching in water, oil, or air follows this step. The workpiece is then aged by reheating it to a temperature of 735 to 1400°F (390 to 760°C) and holding this temperature for a period that may be as short as 2 hr and as long as 100 hr. The properties wanted, the workpiece thickness and the alloy involved affect the choice of treatment parameters.

H. Shot Peening

Shot peening is a process intended to improve the fatigue strength of a workpiece. It produces a residual compressive stress at the surface, a few thousandths of an inch deep, from the effect of many small steel balls that are thrown against the workpiece. The shot balls are impelled by air pressure through a nozzle, or by centrifugal force from a spinning wheel. Sometimes, cut steel wire or glass beads are used instead of steel shot. Masking may be used if the effect is wanted on only part of the exposed portion of the workpiece. Fig. 2J7 in Chapter 2 (Metal Forming) illustrates an application of the process where the compressive stress provided by peening is used to modify the form of the workpiece.

I. Product Marking Methods

I1. ***manual marking*** - Information is often applied to a workpiece or assembly by hand printing or writing, using a pencil, crayon, pen, chalk, or brush. Graphite, paint, ink, stain, dye, or another material that has a contrasting color from the workpiece surface may be used. Such markings are normally used for raw-material grade identification, or in-process or stockroom identification of the workpiece.

I2. ***stamp indented marking*** - Letters, symbols or numbers are pressed into the surface of the workpiece with a hardened die in a punch press, arbor press or hydraulic, pneumatic or solenoid press or individually, with the impact of a hammer. Sometimes, roll dies and equipment are used. Fig. 8I2 illustrates some low-stress-inducing dies for stamp indenting several letters or symbols. A more recent method is to use a programmable stamper that impresses a series of individual dots to form recognizable lettering. Computer control enables the dot pattern to be altered as desired from part to part so that serial numbers and other variable information can be impression stamped.

I3. ***etching (chemical etching)*** - involves the chemical or electrochemical removal of workpiece surface material, usually metal, to create a marking. Typical depths of etching are 0.003 to 0.012 in (0.08 to 0.3 mm). A stencil is normally used to control the pattern of the etch. Etchant liquid is applied to the workpiece through the stencil with a manual or machine-guided pad. Instrument and ruler graduations are typical applications. When photographic techniques are used, similar to those of photochemical blanking (See 3S4), very fine, detailed etches are feasible. *Electro etching* uses electrolytic current to enhance the operation. The workpiece is connected as one electrode and a pad soaked with electrolyte liquid is the other.

Chemical etching, performed over a wide surface rather than through a stencil, is performed to prepare a surface for a further operation such as adhesive bonding or painting. The etched surface has minute irregularities, which improve adhesion by increasing the total surface area and by creating peaks and valleys that tend to lock the adhesive or paint in place.

When the etched marking is much deeper than that normally used in etching, the terms *chemical engraving* or *photochemical engraving* may be used.

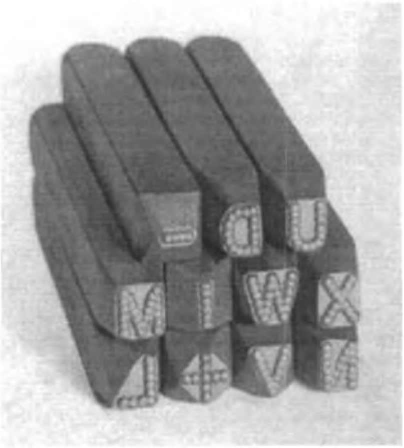

Fig. 8I2 Tools for stamp-indented markings. The dot pattern of each die reduces the stresses induced in the workpiece surface from the operation. (*Courtesy Pannier Corporation.*)

I4. ***engraving*** - produces marks that are much deeper than those from etching. Usually, engraving is a milling operation performed with small end-cutting tools that remove material to produce patterns in the surface of the workpiece. The operation also may be performed with abrasive tools. The markings are normally depressed, but surrounding material can be removed instead, to create a raised image. Nameplates, trophies, plaques and jewelry are commonly engraved. The movement of the cutter can be manually- or machine-controlled. Computer control of the movement of the cutter is now prevalent.

I4a. ***pantograph engraving*** - is engraving guided by a mechanism that allows the operator to trace a known pattern and reproduce it by milling away the surface of the workpiece. The engraved pattern can be an enlargement or reduction-in-size of the master. The operation is used extensively in the production of nameplates, jewelry, trophies and small signs.

I5. ***laser marking and engraving*** - (See section 3O for information on laser machining). Laser energy can be used to make permanent markings by removing part of the workpiece material (engraving), inducing a contrasting color in the workpiece surface or by removing a surface coating that has a color that is different from that of the workpiece material. Laser markings can be computer controlled to provide accurate markings, with flexibility for including variable information from workpiece to workpiece. Changeover from one type of mark (e.g., bar code, pictorial, numerical, or alphabetical) involves only a change of the controlling software program. The operation itself is also quick. Electronic components are frequently laser marked.

I6. ***stenciling*** - uses a sheet device with patterned openings. The sheet is held against the workpiece surface, and ink, paint, dye, stain or other liquid coloring is applied through the openings. The liquid can be applied by any of a variety of devices: brush, roller, spray, or pad, etc. The stencil can be of any sheet material that resists the coloring agent. Paper, sheet metal, fiber or plastic are all used. Stenciling is commonly used to mark shipping cartons. When abrasive blasting is used instead of a coloring agent, glass, ceramic and stone workpieces can be permanently etched.

I7. ***printing*** - A variety of methods are in use to transfer an image to a workpiece, or to a label, tag, or nameplate that will be affixed to the workpiece. In *contact* or *flexographic printing*, an inked die, usually made of rubber, is pressed against the surface to be marked. Non-contact printing utilizes a fine jet to apply an ink marking to the workpiece. Printing is used to mark shipping containers, raw materials for grade identification, labels, nameplates and tags. Chapter 9 describes a number of printing processes, all of which can be used in the printing of labels, tags, decals and nameplates. Many of them also can print directly on the workpiece.

I7a. ***pad printing*** - is a useful method for printing small areas, particularly if the workpiece surface is curved or slightly irregular, thin walled, or sensitive to deformation, since the pressures of pad printing are very low. The method involves the transfer of the image from an etched or engraved flat die to a very soft rubber pad which, in turn, transfers it to the workpiece. Ink is applied to the die plate; excess is removed with a rubber squeegee. When the soft pad contacts the die plate, it picks up the ink held in the recesses of the plate. See Fig. 8I7a. for an illustration of the method. Tooling is quite inexpensive and multiple color images can be printed without waiting for successive applications to dry. This method is used for decorating pens, medical devices, eyeglass frames, electrical devices, computer parts, spools and sporting goods.

I7b. ***screen printing (silk screening)*** - is a refinement of Stenciling. It is often used to add decorative markings such as symbols, product names and trademarks, as well as alphanumeric data to products and components. The stencil-like screen, now usually made from nylon or stainless steel fabric and tautly mounted on a rectangular frame, is coated with a solid material except in openings corresponding to the pattern to be marked. Ink or paint, in paste form, is spread on the screen and the screen is placed on the workpiece. Fixtures are usually used to insure accurate registration of the mark on the workpiece. A rubber squeegee is used to force the ink through the screen openings, manually or mechanically, and onto the surface of the workpiece. The screen printing process is widely used for printing signs, posters, nameplates and other information or decorations directly on products. Paper, paperboard, glass, fabrics, leather, and other materials can be screen printed. Fig. 9D4b in chapter 9 (paper-making and printing) illustrates the process. Successive operations on the same surface with different screens can produce multicolored markings. Photoresist techniques are used to produce the desired pattern in the screen coating.

I8. ***branding*** - involves the use of a heated tool that burns the mark into the surface of the workpiece. The method is effectively limited to nonmetallic workpiece materials such as wood, leather, fibre and composition materials. Hot stamping of plastics is similar, but the base material is not burned; instead, it is heated sufficiently so that a film-carried image adheres to it. The method is described in section 4M2.

I9. ***decal marking*** - involves two major steps: 1) the printing, metalizing or otherwise affixing of an image, often multicolored, onto a lacquer or plastic film that is coated with a special adhesive and is supported by paper. 2) the transfer of this image to a workpiece and its release from the paper or

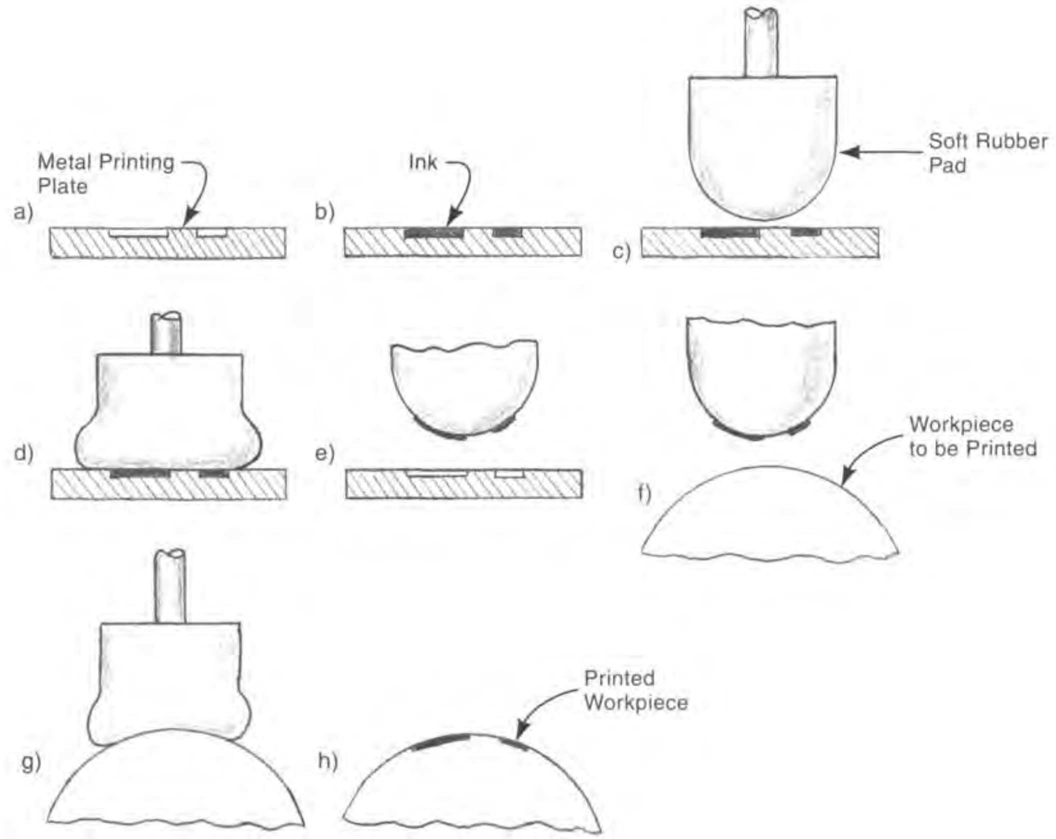

Fig. 8I7a Schematic illustration of the pad printing method of decorating: a) etched printing plate, b) recesses in printing plate filled with ink, c) soft rubber pad in position to contact the printing plate, d) pad pressed against the plate, e) ink transferred from the plate to the pad, f) pad moved to the workpiece, g) pad pressed against the workpiece, h) ink image transferred from the pad to the workpiece.

plastic backing. High-speed methods can be used to print the decal. Sometimes, the film with the image, the decal, is lifted from the backing and transferred by pressing it with a heated pad or roller against the mounting surface. In another system, the decal is first immersed in water, which loosens the film decal from the backing, whereupon it is slid onto the surface of the workpiece. It is pressed in place and dried and, upon further drying, adheres securely to the surface. Decals are used when the workpiece to be decorated cannot be easily printed directly. They are used to affix trademarks, product names and decorations to a product. Large and small appliances, dishes and other china wear, glass objects and toys are decorated with decals.

I10. ***casting and molding*** - Permanent markings can be incorporated in a cast or molded workpiece by incorporating a suitable engraving or insert in the mold or casting die. The information then becomes an integral part of the surface. The marking can be either raised or depressed. Cast automotive parts often have part numbers and other data marked with this method. The process is also common on molded plastic parts.

I11. ***embossing and coining*** - are explained and illustrated in sections 2D7 and 2D6. These methods are most commonly used for nameplates and tags.

I12. ***nameplates, labels and tags*** - may be used to receive the printed or otherwise marked material. All marking methods may be used, depending on the material involved. Nameplates are normally attached with adhesive, threaded fasteners or rivets.

I13. ***hot stamping*** - is a marking and decorating procedure for plastic parts and is described in section 4M2. The method also is used on the painted surfaces of parts made from other materials.

I14. ***dyeing*** - is accomplished when the workpiece absorbs a liquid colorant. The dye penetrates the workpiece and provides permanent coloring. Usually the workpiece is immersed in the dye, but spraying or brushing may also be used if the conditions warrant. Fabrics, leathers, anodized aluminum and a number of plastics (acrylates, cellulose acetate, nylon and thermosetting polyesters) are commonly dyed. (Also see 10G1.)

I15. ***flocking*** - This treatment is usually applied to fabrics. See 10F31.

Note: For marking and decorating plastic parts, see 4M.

References

1. *Materials and Processes in Manufacturing, 8th ed.,* Paul DeGarmo, J. T. Black and Ronald A. Kohser, Prentice Hall, Upper Saddle River, NJ, 1997
2. *Manufacturing Processes and Systems, 9th ed.,* Phillip F. Ostwald and Jairo Munoz, Wiley, New York, 1997.
3. *Processes and Materials of Manufacture, 3rd ed.,* Roy A. Lindberg, Allyn and Bacon, Newton, MA, 1083.
4. *Design for Manufacturability Handbook, 2nd ed.,* James G. Bralla, McGraw-Hill, New York, 1999.
5. *ASM Handbook, Vol. 5, Surface Engineering,* ASM International, Materials Park, OH, 1994.
6. *Plastics Engineering Handbook of the Society for the Plastics Industry, 5th ed.,* Van Nostrand Reinhold, New York, 1991, ISBN 0-442-31799-9.
7. *ASM Handbook, Vol. 4, Heat Treating,* ASM International, Metals Park, OH, 1991.

Chapter 9 - Paper, Fiber and Printing Processes

A. Definition, Paper

The term, *paper,* has traditionally referred to (and still refers to) a material composed of thin sheets of matted or felted fibers, usually of cellulose. Paper is used as a base for writing and printing, for packaging and wrapping, as a filter medium and, in heavier sheets, as a raw material for manufacturing furniture and other products and as a building material. The sheets are produced by collecting the fibers on a fine wire screen from a dilute water suspension. The water is removed, the sheet is dried and the fibers bond together. Almost all common paper is made from cellulose fibers, but some specialty papers are made from synthetic or mineral fibers, bonded together by other methods.

B. Paper-making Processes

B1. ***raw materials*** - Wood fibers make up the dominant raw material for paper. Many other fibers are also composed of cellulose and may be used in making paper. Natural fibers from plants other than wood, recycled wastepaper of various kinds and recycled paper board are also used. Fibers from linen, cotton or other scrap rags are ingredients in finer papers and, before the development of wood pulp processes, were a major ingredient in many papers. Wood fibers are obtained from the pulpwood of tree trunks, often from smaller trees not suitable for lumber uses. Scrap and sawdust from the lumber, furniture and other woodworking industries are also used. Woods used include oak, beech, birch, aspen, gum, hemlock, pine, fir and spruce. Bamboo, hemp, jute, wheat or rice straw, esparto grass, ambary and sugar cane fibers are also sometimes employed. Currently used non-cellulose fibers include those made from various polymers.

B2. ***paper making from wood (by machine)*** - involves a sequence of steps: 1) Trees are harvested and the logs are transported to a pulp or paper mill. 2) Logs are cut to a convenient length and are debarked. 3) The wood is converted to pulp by one of several methods. 4) The pulp is refined. 5) The pulp is washed and screened to remove foreign materials, and often is bleached. 6) Some pulps go through a beating process to further process the fibers. 7) Fillers, sizing agents, dyes and adhesives may be added to the pulp to improve properties for the end use of the paper. 8) A slurry of pulp and water is spread on a porous surface; excess water drains off. 9) A continuous web of pulp, supported by a wire mesh or other porous conveyor, passes a series of suction devices and rolls that remove more water from the pulpy sheet, and then press it to a smooth finish. 10) The sheet passes between a large number of steam-heated rolls that dry the sheet. 11) The paper web then may undergo "calendering", that is, pressing it between rolls to provide a smoother "machine" finish. 12) The completed paper is slit and wound onto reels or cut to length and stacked, in both cases to prepare it for further processing into useful products or material. Fig. 9B2 illustrates the operation sequence.

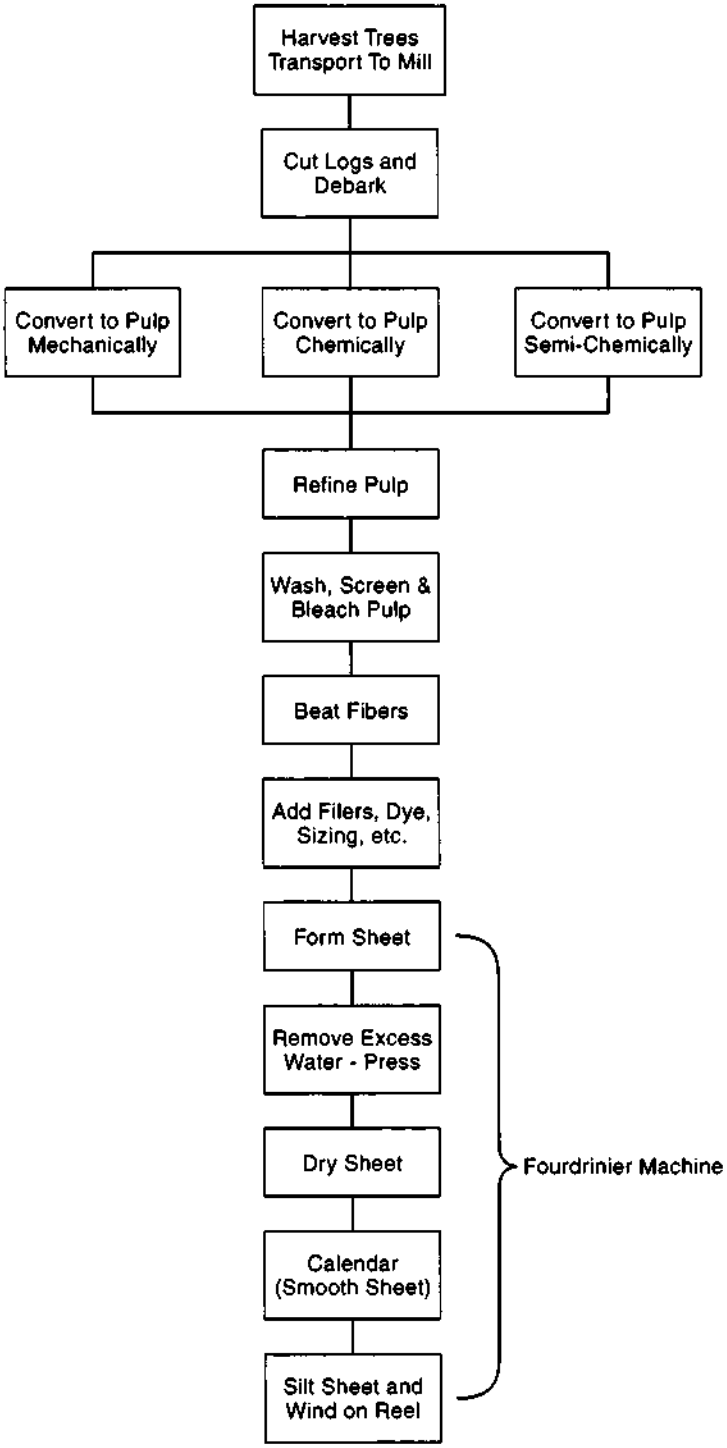

Fig. 9B2 Block diagram of the operation sequence for making paper from wood pulp.

B2a. ***debarking of wood logs*** - is described in 6A1 (Woodworking).

B2b. ***pulping of wood*** - is the separation of wood fibers from one another so that they absorb water, swell and become flexible. There are three basic approaches: mechanical, chemical and semi-chemical.

B2b1. ***mechanical pulping of wood*** - makes use of large, heavy duty, grinding wheels that reduce pulp logs to fiber. Almost the entire content of the logs is converted to pulp. The exception is a small portion of the log that is water soluble. The logs are first cut into *bolts*, having a length of either 2 or 4 feet[4] (0.6 or 1.2 m), the length depending on the size of the grinding equipment. If the moisture content is less than 30 percent, the bolts are soaked in a pond or sprayed to bring the moisture content to 45 to 50 percent. Debarking is the next step, for which the bolts are tumbled in large drums. They are then transferred automatically to the grinding machines which, with large aluminum oxide or silicon carbide grinding wheels, reduce the wood to a pulp. High horsepower (e.g., 10,000) is used along with high pressure from hydraulic cylinders that force the logs against the wheels. Friction develops heat that breaks the bonds of lignin between fibers which are then removed by the abrasive action of the wheels. The method can be used to produce up to about 6 tons of pulp per hour per grinding wheel.

In another method called *thermo-mechanical pulping*, the logs are first cut into chips that are heated and fed between the disks of a refining machine. The action of the rapidly rotating disks breaks the heated chips into wood fibers.

Paper made from mechanically-processed pulp may contain some unwanted ingredients. The pulp does not bleach to a high degree of whiteness and is usually used for lower grades of paper.

B2b2. ***chemical pulping of wood*** - uses chemical means to dissolve the lignin between the wood fibers. Both batch and continuous processes are used. The debarked logs are first cut into chips from 1/2 to one inch (13 to 25 mm) long. The chips are cooked by one of several processes for as long as 12 hours. Chemical action during the cooking dissolves the lignin, the material that holds the fibers together.

One particular method, the *sulfite process*, operates on a batch process to cook the wood chips in a steam-heated pressure vessel called a *digester*. The digesters are large with capacities of 15 or more tons of pulp. They are made of steel with a ceramic tile lining set in acid-resistant cement. Chemical action results from an acid bisulfite solution, created by dissolving sulfur dioxide gas and bisulfite in water. The vessels are first filled with wood chips; then acid is added, displacing any air. Heating is by steam. After the cooking cycle is completed, the chips are blown from the bottom of the digester. The intensity of the action helps separate the wood fibers.

In the *Kraft* or *sulfate process*, the chips are cooked in a solution of sodium sulfide (Na_2S) and caustic soda (NaOH). This method has replaced sulfite processing as the predominant chemical means of pulping wood. Sodium sulfate is used as part of the cooking solution though it is not an active ingredient. Sodium sulfide and caustic soda are the active ingredients. The digester is heated with heat exchanger coils or by direct injection of steam. Cooking temperatures are typically 320 to 460°F (160 to 235°C) at pressures of 115 psi (800 kPa) for 1/2 to 2 hours. Both batch and continuous digesters are used but most current production is from continuous equipment. The chemical solutions used in the process are reused, but the recovery process is quite complicated. The directly reused liquid is referred to as "black liquor"; the chemically-recovered sodium sulfide and caustic soda are in a solution referred to as "white liquor". A mixture of both white and black liquor are used in the cooking process. The kraft process produces paper that is particularly strong and durable. Kraft paper is used, for example, for paper grocery bags. For some time, its use was limited to applications where the characteristic brown color was acceptable, but means have been developed to bleach it for other uses.

B2b3. ***semi-chemical pulping of wood*** - consists of cooking with sulfite or alkali to soften the lignin, followed by a mechanical treatment with disk refiners that separate the fibers from one another. Preparatory operations are approximately the same as those followed when providing chips for chemical pulping. The chemical treatment phase uses a pressurized reactor but is somewhat milder than full chemical pulping. A near neutral sodium sulfite solution is common although kraft pulping solution, caustic soda or acid sulfite are also used. After the pulp is thoroughly saturated with solution, it is transferred to a disc refiner consisting of a rotating disc paired with a parallel disc that is stationary or rotating in the opposite direction. The disks have blades or bars on them. The plane of action is perpendicular to the rotating disk's shaft and the pulp passes between the two discs. The device is designed to bend the fibers rather than to break or cut them. Several stages of refining may be used to reduce the softened chips to pulp. Semi-chemical pulp is used to make low-cost printing papers, fluted interior layers of corrugated boxes, and for other applications where intermediate strength and chemical resistance properties are needed.

B2c. ***refining*** - is the disc operation described above as part of the semi-chemical pulping of wood. The same basic process is also used when baled pulp is shipped to another factory that completes the papermaking process. In this case, the pulp is unbaled and, with water, is placed in pulpers, machines with disc refiners. The operation is frequently performed at room temperature and the disc blades are smaller than those used for semi-chemical pulping. Recycled waste paper may also be added. The refiners improve the flexibility of the fibers, increase their surface area and blend the ingredients into a uniform mixture.

B2d. ***removing foreign material*** - The pulp from the chemical and semi-chemical processes listed above is first washed to remove the processing chemicals. Then, debris, "shives" (unfibered wood chips), bark, undigested knots and other foreign materials are removed from the pulp using a series of screens. With mechanically made pulp, a series of rifflers may also be used before screening to remove the heavier foreign pieces. Another method uses centrifugal force and a vacuum to draw pulp through a rotating, drum-shaped, screen in the pulping tank. A third approach is a vortex machine that spins the pulp rapidly using weight rather than particle size as a basis for separating pulp from unwanted materials. The heavy pieces separate from the pulp and fall to the bottom.

B2e. ***bleaching and washing*** - bleaching is a multistage process, especially when kraft paper is processed, since kraft is dark in color and not easily bleached. Four to eight operations are typically involved. Each operation includes a mixing step wherein the bleaching agent is pumped into the pulp mixture. This is followed by a reaction period, that may last from one-half to several hours, and washing to remove lignin and residual chemicals from the pulp. In current bleaching practice[1], the first step is chlorination of the unbleached pulp, effected by mixing chlorine gas with the pulp at a temperature of 70 to 80°F (21 to 27°C). This produces an acid that reacts with the non-carbohydrate components in the pulp. The reaction products are then dissolved by treating the mixture with dilute caustic soda (NaOH). They are then washed out of the pulp mixture. The next major treatment is with alkaline hypochlorides to neutralize the solution. Then there is a final wash. Small amounts of chlorine dioxide (ClO_2) may be used in the process to improve the brightness of the bleached pulp.

Washing occurs at several stages in the preparation of pulp for paper making. The sequence of washing operations depends on the type of pulping method used. Its prime purpose is to remove spent cooking liquor or other soluble chemicals from the pulp. In bleaching kraft paper, washing out the spent pulping liquor immediately follows cooking, before the bleaching operation begins.

B2f. ***beating*** - is an operation that compresses and works the fibers. It enables water to penetrate better, causing the fibers to swell and become more flexible. The action separates and frays the fine filaments of the fiber so that they bond together more securely. The result is paper with higher strength, greater density and stiffness, and lower porosity. Previously, this was accomplished with a class of machines known as Hollander beaters. These machines include a heavy roll that revolves against the wood pulp that lies between it and a base plate. The spacing between the roll and plate is gradually reduced, progressively squeezing the fibers and fraying the fibrils. Hollander beaters are presently used only in the production of specialty papers and in smaller-quantity production. Larger mills utilize the refining process described above to achieve the equivalent improvement of the fibers.

B2g. ***making paper from pulp*** - The first step in transforming a slurry of pulp in water into paper involves spreading the slurry evenly on a porous surface. The excess water drains away, leaving a wet mass of cellulose fibers that tend to interlock, forming both mechanical and chemical bonds, and giving strength to the sheet that will result. Further water removal, pressing and drying take place before the sheet of paper is finished. Some finishing operations may follow. The paper may then be slit and sheared into sheets. These operations have been performed for centuries on a hand basis but, except for hobby, laboratory and artwork, all current production takes place on large, complex machines which produce as many as 300 tons of paper per day.

B2g1. ***Fourdrinier and cylindrical paper-making machines*** - transform a dilute slurry of fiber and additives into a roll of paper in several steps. As a first step, the cellulose fibers, mixed liberally with water (more than 99% water), are collected on either a flat forming screen, a cylindrical screen or a suction cylindrical roll. Excess water drains off, leaving a layer of wet pulp. With cylindrical screen machines, the screen-covered cylinder rotates in a vat containing the slurry of pulp. The slurry is flowing, causing the pulp to be captured by the screen while the excess water is removed through the cylinder. The high dilution of the slurry helps insure uniform density and thickness of the sheet. Some cylinder-type machines use suction to draw the pulp to the cylinder as it rotates in the slurry. The wet pulpy sheet is pulled off the cylinder as it completes its rotation and is placed on a wire mesh conveyor.

Fourdrinier machines use a wire mesh conveyor that is in the form of a loop. The wire mesh is normally metal but may be plastic. Strands are fine, typically woven 55 to 85 per in (21 to 33 per cm).[1] The Fourdrinier method is illustrated in Fig. 9B2g1. The slurry of pulp flows from a headbox that distributes it uniformly across and along the wire mesh conveyor as the conveyor passes underneath. The conveyor is flat at that point and as much as 33 ft (10 m) wide. The slurry in the headbox is under pressure to assure proper and uniform flow. Excess water flows through the mesh screen, often aided by an air vacuum below the wire mesh. Rolls that support the wire mesh also absorb water from the pulp. The wire mesh belt may oscillate from side to side to aid in interlocking the fiber ends.

The pattern of the wire mesh is imparted on the paper's upper surface by a "dandy roll", a cylindrical roll covered with a mesh of wires in the pattern desired. Lettering or designs woven into the mesh appear as watermarks on the paper, identifying the manufacturer and the grade of the paper. The roll also flattens the upper surface and improves its finish. A mesh pattern is also imparted on the bottom surface

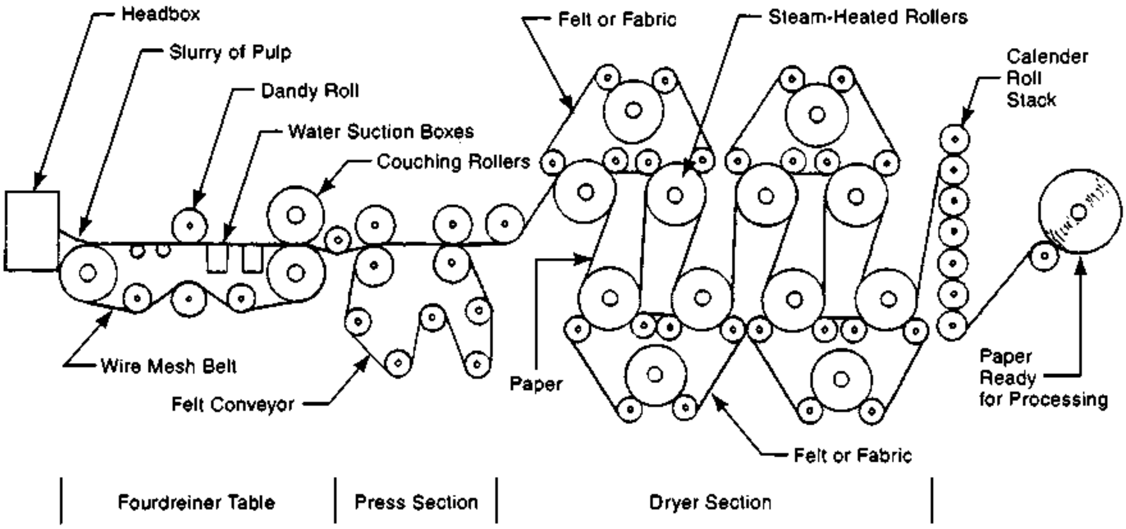

Fig. 9B2g1 Schematic diagram of the manufacture of paper on a fourdrinier machine. A slurry of pulp is spread on a wire mesh, drained and drawn of moisture, pressed and dried through several stages to produce paper.

of the paper from its contact with the mesh conveyor. At the end of the table section of the machine, the paper passes between two opposing felt-covered "couching rolls" that squeeze still more water from the web of paper and force the fibers more closely together. Suction is also used on current couching rolls to aid the water extraction.

The paper is strong enough at this point to be transferred to a felt web that carries it through the press section of the machine. In this section, the paper web passes through a series of rolls that remove additional free water. The rolls are steel with a rubber coating that, with the felt conveyor, prevents the paper from being crushed or having the markings obliterated. The felt, made from a combination of wool and plastic fibers, is porous enough to absorb water removed by the pressure of the rolls. In the press section, the moisture content is reduced but still comprises 60 to 68 percent of the weight of the paper[1].

The next machine operation is drying. The paper web is guided around a series of steam-heated cylindrical rolls and is held in contact with them by dryer felts or dryer fabric. As many as 70 rolls may be incorporated in the dryer section of a typical high-production paper machine. The drying operation removes approximately two tons of water for every ton of paper produced.

Next, the web is "calendered". It is pressed between opposing smooth, chilled rolls that impart a smooth surface finish to the sheet. Several pairs of such rollers in a vertical stack are normally employed.

After drying and calendaring, the paper may be coated with a varnish-like material to give it brightness and gloss. It is then slit and is normally wound on reels for later use, or for additional operations. Alternatively, the paper may be cut to length and stacked at the end of the machine.

Some Fourdrinier machines have two layers of wire mesh conveyor and the sheet is formed between them. This arrangement aids in removing water from the top as well as the bottom of the web. Such machines are called, "twin-wire machines".

B2h. ***finishing (converting)*** - Paper from a paper-making machine normally must undergo one or more further operations to improve its condition or change its configuration for its intended use. There are two kinds of paper converting operations:

Wet converting operations are performed on paper from rolls to improve the paper's printability and opacity or to provide gloss or greater smoothness. Coating, impregnating and laminating are typical wet converting operations. Sizing, the operation that prevents ink from penetrating and spreading in the naturally absorbent cellulosic fibers of paper, is a major finishing operation. Coating and sizing with starch, clay and glue - with additional calendering - provide an excellent surface for printing fine halftone illustrations. Colored paper is made with dyes that are absorbed by the pulp fibers.

Dry converting changes the paper from rolls into a more useful form by slitting, sheeting and stacking, or forming and glueing it into such products as envelopes, bags, boxes, paper plates and cups, tubes, corrugated cartons, writing pads and coasters.

Some specific wet converting operations are the following:

B2h1. ***extrusion coating and laminating of paper*** - is described in Chapter 4, section I4, of this handbook.

B2h2. ***water dispersion coating*** - is performed either as part of the papermaking operation between drying sections of the machine, or as a separate operation later, using previously made paper rolls as raw material. The water dispersion that is used contains some pigment or filler (calcium carbonate, clay, titanium dioxide) to provide uniform distribution of the material and an adhesive binder (latex, starch or a synthetic material) to bond the coating to the paper.[1] The paper, passing through a bath of the dispersion, picks up the desired amount of coating and then passes between drying and smoothing rolls. The coating materials provide better opacity and brightness to the sheet, permitting it to be printed on both sides without any image from the reverse side showing through.

B2h3. ***sizing*** - is material that prevents ink and other aqueous liquids from soaking into the paper. One common sizing material is rosin which is applied to the fiber as a dispersion with soap and water. The amount of rosin, after application, is from 1 to 5 percent of the weight of the fiber. Alum, or aluminum sulfate ($Al_2(SO_4)_3$), causes the rosin to precipitate from the dispersion and adhere to the surfaces of the fibers.

B2h4. ***filling*** - Fillers are incorporated in paper to increase white brightness and surface smoothness, to make the paper more opaque, and to improve its ability to accept ink. Many different compounds can be used: calcium carbonate ($CaCO_3$), kaolin (clay), titanium dioxide (TiO_2), zinc oxide, zinc sulfide, calcium sulfate, talc and barium sulfate. As with rosin sizing, alum may be used to provide an attraction of the filler to the fibers.

B3. ***paper making from rags and other textile fibers*** - Clean rags, textile mill cuttings, garment and other sewing scrap, short fibers from raw cotton processing and flax fibers are used in making finer grades of paper. Operations involved in processing baled rags are as follows: 1) Bales are opened and rags are threshed mechanically. 2) Threshed rags are manually sorted to remove rubber, synthetic fibers, metal, papers and plastic-coated rags. 3) Rags are cut into small pieces. 4) Magnetic rolls remove any extraneous pieces of iron and steel. 5) Rags are cooked in a dilute alkali solution [sodium carbonate (soda ash - Na_2CO_3), or caustic soda ($NaOH$) with lime (calcium oxide - CaO), and detergents or wetting agents]. Cooking, with steam heat, lasts for 3 to 10 hours to remove grease, wax, fillers and oils. 6) The rags are washed. 7) They are beaten mechanically, as described in paragraph B2f above, to shorten and fray the fibers and increase their tendency to swell when wet, all of which enhance the bonding of fibers to each other in the paper. 8) Fillers, sizing material and colorants are added to the mixture as desired to provide added body and weight to the paper. 9) Additional beating with a Jordan engine, a machine with a pair of concentric conical surfaces containing knives, may take place. One cone rotates inside the other and the slurry of rag fibers flows between them, producing further separation and fraying of the fibers. 10) Subsequent operations to create paper from the fibers are essentially the same as those described above when wood pulp is the raw material. Rag pulp produces "rag bond", the fine papers that are used for important documents, currency, fine writing paper, art papers and other applications where durability and long life are important. Papers are also frequently made from blends of rag and wood fibers.

B4. ***paper making from synthetic fibers*** - Synthetic fibers - nylon, polyesters, rayon, acrylics and glass - and blends of them with conventional pulp - are used to make specialty papers used in filtration and where chemical and water resistance and dimensional stability are important. Synthetic fibers are bonded with adhesives instead of by the natural cohesion of cellulose fibers. Otherwise, they could be processed on conventional paper making machines. Applications also include electrical insulation and, for flexible fabric-like blends, garment linings.

B5. ***paper making from waste paper (paper recycling)*** - Waste paper comes in several categories: corrugated cartons, newsprint, white business paper and mixed paper. Coated papers used in packaging, magazines and advertising applications are more difficult to recycle and are processed separately until the coating material is removed. Such coatings include various plastics, metallic foils, asphalt, synthetic adhesives and certain inks.

There are two basic pulp preparation processes for wastepaper: 1) those that involve ink removal and, 2) those that do not include de-inking. The former are used for papers to be printed again and the latter are used for coarse papers and box board, and account for the great bulk of recycled paper products.

Recycled fiber is also used in the manufacture of paper towels and paper napkins.

B5a. ***waste paper processed with de-inking*** - Paper from bales is inspected and fed into a pulping tank. Caustic soda ($NaOH$) or other chemicals [soda ash (Na_2CO_3), silicate of soda, phosphates and wetting agents] in hot water (150 to 190°F - 65 to 90°C) are the other contents of the tank. The tank is agitated with blades that circulate the stock and, with the aid of the chemicals, separate the fibers. After pulping, the pulp is screened to remove trash pieces and washed to remove ink and chemicals. Bleaching with hypochlorite may follow if whiteness is a requirement.

B5b. ***waste paper processed without de-inking*** - is processed similarly to that requiring de-inking except that chemicals required to dissolve and disperse the ink are not required.

C. Manufacture of Various Paper Grades

Paper-making processes vary, depending on the grade of paper produced and its application. Key factors are the type of pulp used, the paper making method and machine involved, the additives used and the amount of refining done. The following are some important paper grades with comments on any special aspects of the processes used to make them:

C1. ***bond paper*** - is high quality paper used for currency, insurance policies, legal documents, letterheads, advertising pieces and certificates. These papers are especially strong and stiff, of bright color and high cleanliness and particularly resistant to spreading and over-penetration of ink. Much bond paper is made from rag fibers though some is made from chemically-produced wood pulp.

Papers made from chemically-treated pulp are sometimes called, "wood-free papers". (The term, "wood free" really means free of mechanical pulp.). These high-grade papers are bleached and often coated. Typewriter, computer-printer, copier and envelope paper are normally uncoated. When coated, "wood free" papers are used for magazines, annual corporate reports, sales brochures, and similar application. Coatings include clay, calcium carbonate or titanium dioxide.

C2. ***newsprint*** - is made primarily from machine-ground pulp. A common practice is to use 75% mechanical (machine ground) pulp and 25% chemical pulp. The machine-ground pulp is lowest in cost and has good printing qualities; the chemical pulp is included to increase the strength of the paper. Improvements in the manufacturing process, notably better bleaching, have led to use of this grade of paper for other applications such as catalogs, magazines, and paperback books. These papers take ink well but have a tendency to turn yellow when exposed to light over a period of time.

C3. ***paperboard*** - is heavy board, 0.012 in (0.3 mm) or more in thickness and 0.66 oz/ft^2 (200 g/M^2) or more in weight. It is used for paper boxes, formed food trays, paper plates, corrugated shipping containers, boards used in electrical and building applications, and book cover stock. Paperboard is made from wood pulp, wastepaper and straw pulp or a combination of them[1]. Cylinder machines are used to layer several sheets of pulp together prior to pressing and drying to achieve the desired thickness.

The term, chipboard, is often used for paperboard made from unbleached mixed pulp and used for applications where appearance and strength are not critical. Tablet backs, posterboards, folding cartons and boxes, and backings for photos are common applications. Cereal, cigarette and other boxes are made from chipboard coated with other papers and sometimes impregnated with wax.

C4. ***sanitary papers*** - include paper towels, toilet tissue, paper handkerchiefs, and paper napkins. These products are made from recycled paper or a blend of mechanical pulp, bleached kraft and sulfite pulps. They are processed with a minimum amount of finishing additives except for plastics which are added to increase wet strength. One operation common on these papers is *creping*. This involves running the sheet against a smooth drying roll but stripping the paper from the roll, after partial or complete drying, with a stationary blade that bears against the roll. The sheet folds against itself creating the desired creping effect. Thin facial tissue is dry when removed by the blade; heavier paper toweling and napkins are usually still wet. The light grades are dried on Yankee machines. These have very large steam-heated dryers that eliminate the need for felt transfers of the thin stock. Moist sheets of napkins and toweling are sometimes embossed with textured rollers to provide a decorative pattern.

C5. ***kraft paper*** - is the brown paper used for paper bags and corrugated paper cartons. It is usually made in heavier thicknesses. Kraft is produced from softwood pulp, usually from pine trees using the kraft or sulfate chemical pulp preparation process described above in paragraph B2b2. Softwood has longer fibers than hardwood and they provide greater strength to the paper. Sizing and treatment with plastic resins, when used, decreases the paper's water absorption and increases its wet strength. A common use for kraft paper is grocery bags. Bulk materials such as animal feeds and cement are often shipped in multiwall kraft paper bags. Kraft paper can be bleached and is then used for bags or cartons where more prominent printing or colored decoration is desired. Bleached kraft is used for food packaging. When coated with wax or plastic, it is used for paper cups and milk cartons.

C6. ***vulcanized fiber*** - is a fibrous material made by treating paper pulp, derived from recycled cotton waste, with zinc chloride. The zinc chloride is later bleached out. The material has been called, "the first plastic" and has many uses. It possesses strength and resistance to heat, wear, oils and solvents. It has light weight, good electrical insulation properties, and is economical to produce. Uses include luggage and musical instrument cases, protective helmets for firemen and others, quiet gears, gaskets, knife handles and electrical insulators in transformers, electrical plugs, switches and sockets. However, vulcanized fiber has been replaced in many applications by other plastics.

D. Printing

Printing is one of a number of processes for producing identical copies of written text and images. Reproduction can take place on paper, plastics, or fabrics, or on various solid objects including product components. Images can be in black or color. There are a number of available processes including the following:

relief printing - letterpress, flexographic. (In relief printing, the printing surface is raised above the non-printing surface.)

planographic printing - offset lithography, screenless lithography, collotype, waterless printing. (In planographic printing, the printing surface and non-printing surface are at the same level.)

intaglio printing - gravure and rotogravure. (In intaglio printing, the printing surface is below the level of the non-printing surface.)

stencil and screen printing

electronic printing - includes laser, other electrostatic, magnetographic, ion or electron deposition, ink-jet, dot-matrix, thermal methods, photocopying and microcapsule methods.

D1. ***relief or letterpress printing*** - is the earliest printing process. It involves the use of type with a raised surface surrounded by a relieved surface. The raised surface is in the shape of type faces, lines and dots. The earliest forms of relief printing, in China over a thousand years ago, used wooden type with the non-printing areas carved away by hand. Gutenberg's presses, of about 1450 AD, the first Western Hemisphere printing, used the same principle. Ink is applied to the raised surface only, and when paper is pressed against the type, the ink is transferred to the paper. Fig. 9D1 illustrates the principle. There are three basic configurations of letterpress machines as shown in Fig. 9D1-1. The platen press is shown in two versions: a1) the rudimentary press as used by Gutenberg, and a2) a production platen press with an automatic inking roll. View b) shows the flatbed cylinder press where sheets are held by an impression cylinder that rolls against a flat bed of type as it moves forward. View c) shows the rotary press where a continuous web of paper is fed between an impression roll and another roll containing a curved printing plate. Rotary presses are used for mass-production situations, but for much mass production, offset printing and other processes have largely supplanted letterpress because of better quality and reduced set up costs.

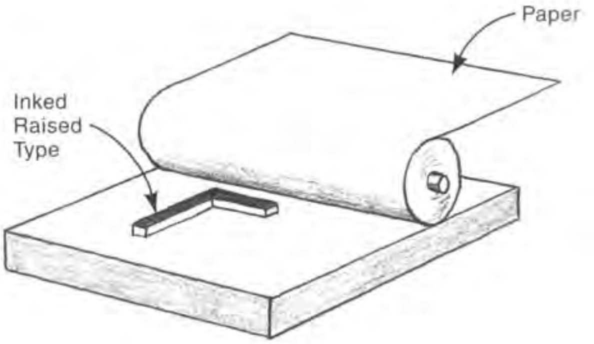

Fig. 9D1 The principle of letterpress printing. Raised type is coated on its top surface with ink that is transferred to the paper when the paper contacts the plate.

Letterpresses print from a metal or plastic plate incorporating the raised type, or from a type form, a metal frame containing individual metal type pieces locked into place.

D1a. ***typesetting for letterpress printing*** - may still be performed by hand assembly of individual pieces of movable type, but methods of making a whole page of type as one piece have prevailed for many years. Linotype machines were used to cast type, one line at a time, with justified lines (aligned margins) and the plate consisted of assemblies of lines of the cast type. Current practice uses large metal or plastic type plates made

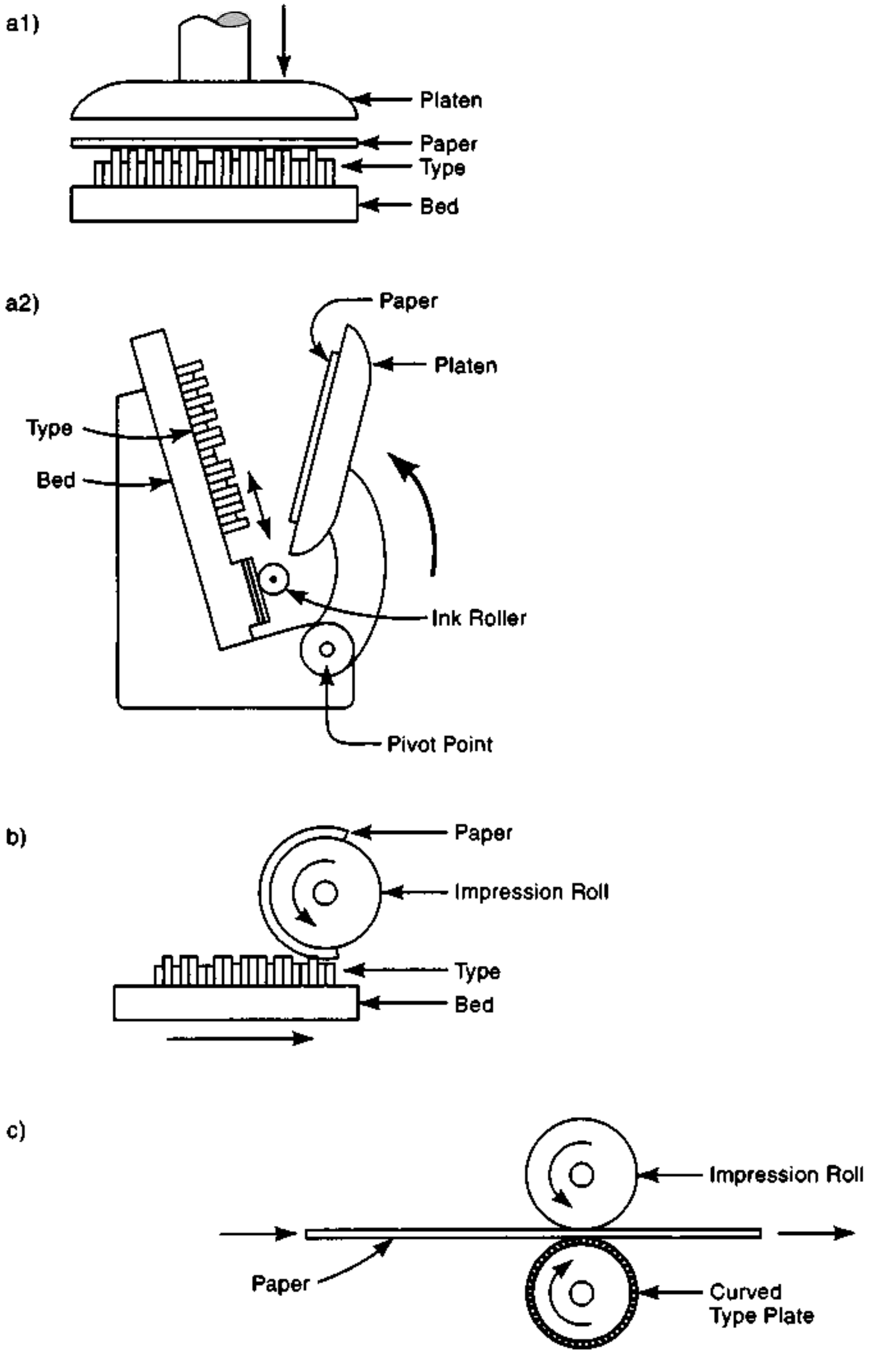

Fig. 9D1-1 Different configurations of letterpress printing presses. a1) and a2) utilize a flat type bed and flat platen to press the paper against the type. The Gutenberg press of a1) is fully manual. a2) is a much later production press with automatic inking. b) shows the principle of a flat type bed with paper pressed against the type by an impression roller; c), the principle of a rotary press, with a curved type plate mounted on a roller opposed by an impression roller that presses the paper against the type.

photochemically. Each page is first designed and composed by computer with the desired type sizes, page composition and illustrations. A film negative of each page is printed on suitable film by a laser printer, under the control of the computer. Then, ultraviolet light is shone through this negative and against a plate made from a photosensitive polymer. Light strikes those areas that are to transfer ink. Where the ultraviolet light contacts the photopolymer plates, the surface is polymerized and hardened. In other areas, the material is soft and is removed by a water or air blast. With metal plates, a similar approach is used, but the equipment applies a chemical etchant to remove metal in areas not exposed to light. The printing plate, thus produced, is mounted on the letterpress.

D1b. ***flexographic printing*** - is a variation of letterpress printing. An engraved printing plate is used and ink is carried on the raised areas. However, the plate is made from rubber or another flexible, resilient, material that enables weaker or irregular surfaces to be printed. Corrugated cartons, labels, unfinished surfaces, cardboard, plastic film, wrapping paper, newspapers and magazines, are all printed with flexographic equipment. Equipment is rotary and web-fed and the relative position of the impression roller and type plate roller is adjusted to apply just enough pressure to get a clear reproduction. Ink is fluid and is transferred from a roll that rotates in an ink container, or from a flow of ink, to a transfer roll and then to the inking roll that contacts the flexible plate. A doctor blade may be used to remove excess ink from the transfer roll.

The printing plate is fabricated by first making a conventional metal plate and using it to form a negative impression in soft plastic or soft cardboard. The soft negative plate then becomes a mold or *mat* for making the flexible rubber or plastic printing plate.

D2. ***planographic printing*** - In this basic process, the printing surfaces of the plate are on the same plane as the non-printing surfaces. Fig. 9D2 illustrates the principle. The basis for lithography, the prime planographic technique, is a printing plate that is receptive to ink in certain areas (type and image areas) and repellent to ink in other areas. The method is based on a 1798 discovery by Senefelder, in Germany, that wet limestone would repel oil-based printing ink except in areas previously marked with a grease pencil. The grease markings would retain the ink so that a damp sheet of paper pressed against the stone surface would receive the marked image. A number of copies could be made by repeating the wetting, inking and pressing steps.

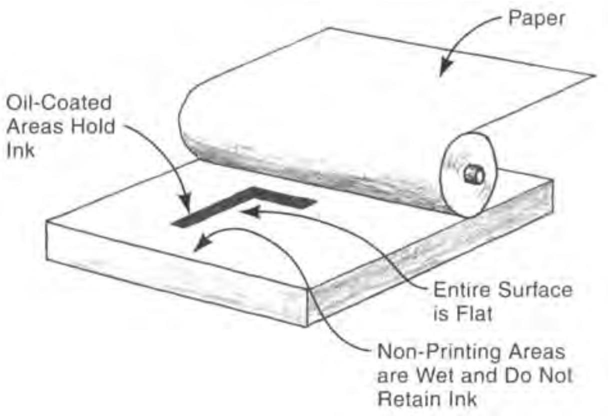

Fig. 9D2 The principle of planographic (lithographic) printing. Lettering, in grease, is applied to the flat printing plate. Ink is then applied to the plate. Ungreased areas repel the ink but the ink is held by the grease and then is transferred to paper when the paper contacts the plate.

D2a. ***lithography and offset lithography*** - are planographic processes. Current-day lithography uses a thin aluminum printing plate thinly coated with a light sensitive polymer. (Stainless steel or plastic plates are also used.) The coating undergoes a change in solubility when exposed to intense blue or ultraviolet light. The exposed areas become insoluble to water and receptive to ink. The unexposed areas are washed free of the photopolymer and, if kept wet, are repellent to ink. If the plate is kept wet and inked, paper or other substrates pressed against it will be printed.

The desired text and images can be processed onto the plate by one of several methods. Placing a photographic negative or positive on the plate before exposing the plate is the earlier method, and is still used. A computer-controlled laser beam achieves the same effect on the plate without the time and cost of preparing a film negative.

Rotary presses are used for lithography. The plate is mounted on a cylinder that rotates during printing. Rollers that contact the plate cylinder are used to provide the proper amounts of both wetting and ink to the plate as the plate cylinder rotates. Sometimes the dampening (wetting) is provided by a spray head. Dampening water is actually a mixture containing some alcohol and a small amount of either an acid or alkali. Normally about 98% water, it may contain as much as 20% alcohol, for some applications. Because the ink is highly viscous and thixotropic, and because of the tendency for some water to get into the ink, the ink delivery system may be complex and may include a series of rollers and vibrators.

Though printing directly from the plate cylinder to the paper was widespread, it was discovered that it was advantageous to use an intermediate roller to transfer the ink pattern from the lithographic plate to the paper. This intermediate metal roller, covered with a rubber, is called a *blanket cylinder*, and the process of using it is called, *offset lithography*. The use of the blanket cylinder facilitates printing on metal, plastics and other rigid, smooth surfaces, as well as on surfaces with some irregularities or texture.

The image quality from offset lithography is excellent. The process is used on small, sheet-fed equipment for printing modest quantities of brochures, flyers, labels, stationery, and newsletters. For large-quantity production, web equipment is used and magazines, catalogs, newspapers and books are printed. Color printing using multiple offset units is common. Because of the low cost of plates, the easy set up, the high press speeds and the quality of the printing, offset has replaced letterpress as the most widely used printing process. Fig. 9D2a illustrates web printing on both sides of a sheet using offset lithography.

D2b. ***collotype (collography)*** - is a planographic process, similar to lithography in that the

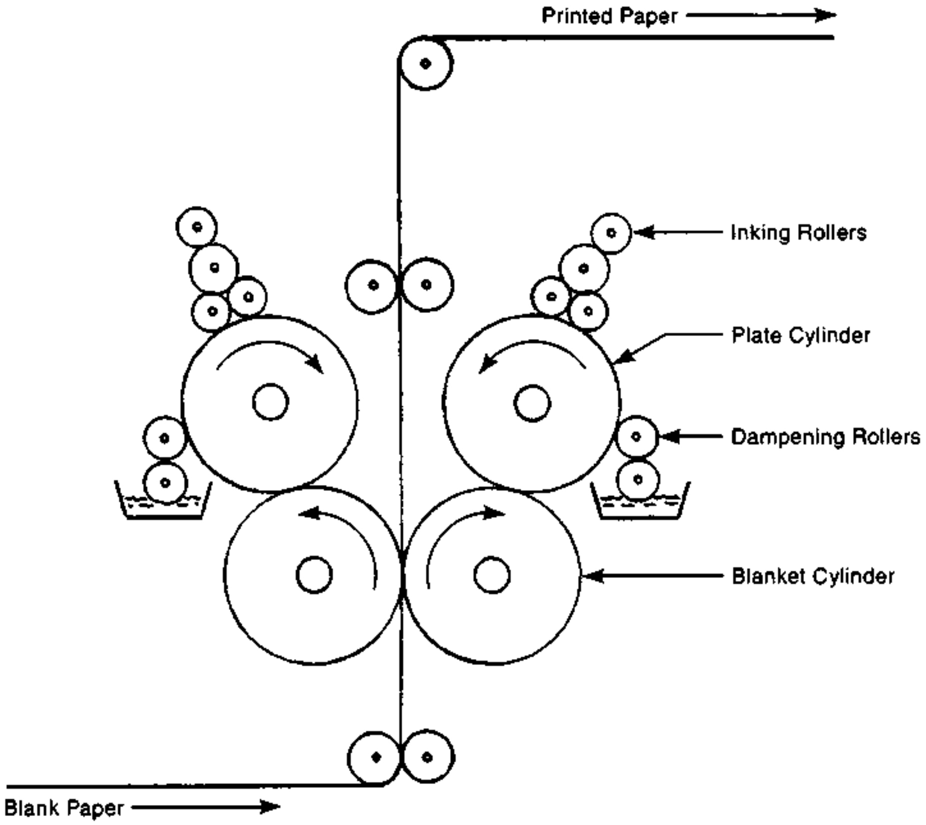

Fig. 9D2a Web printing both sides of a sheet using offset lithography.

flat printing plate accepts ink in some areas and not in others. A coating of light-sensitive gelatin on a metal or glass plate is exposed to light through a negative film of the text and images to be printed. The light, passing through the negative, hardens the gelatin to a variable amount, in proportion to the amount of light that it has received. The plate is soaked in a glycerin-water mixture. The softer parts of the gelatin coating absorb the mixture; the harder parts absorb the least amount. When the plate is mounted in a printing press, the driest parts accept the most ink; the softest, wettest areas accept the least ink. The gelatin retains moisture so no dampening is needed during printing, but humidity may have to be high in the pressroom to maintain the dampness of the nonprinting areas of the plate. The number of copies obtainable from a plate is limited normally to about 2000 but sometimes as many as 5000 can be produced. Printing speed is also low, 200 copies per hour or less. Collotype produces prints of excellent quality and prints photographs without the need for a halftone screen but with a gradation of tones that is close to that achievable with photographs.[4] It is used to make high-quality reproductions of paintings and to print greeting cards, postcards, posters and advertising material, including transparent illustrations.[1] Collotype printing is no longer a common process in the United States.[2]

D3. ***intaglio printing*** - is printing with a system wherein ink is transferred to the paper from surfaces depressed below the basic surface of the printing plate. This differs from letterpress where the inking surface is raised and planographic where there is only one surface of the plate. Fig. 9D3 illustrates the principal of intaglio. Gravure printing is the intaglio method. Rotogravure is a variation of this process that uses a rotating cylindrical printing plate.

D3a. ***gravure printing*** - uses a copper cylinder or plate engraved with the image or text to be printed. Ink is retained in the engraved recesses of varying depth on the surface of the cylinder or plate and is transferred to paper or other material pressed against it. The recesses or *cells* are produced by any of a number of methods: electromechanical or mechanical engraving, photo-chemical etching, laser or electron-beam engraving. The recesses may be very small and very numerous (over 20,000 cells per sq. in) but vary widely in both size and depth. Size variation, however, is within the borders of partitions between the cells. A typical cell is 0.0014 in (35 microns) deep and 0.005in (125 microns) square.[4]

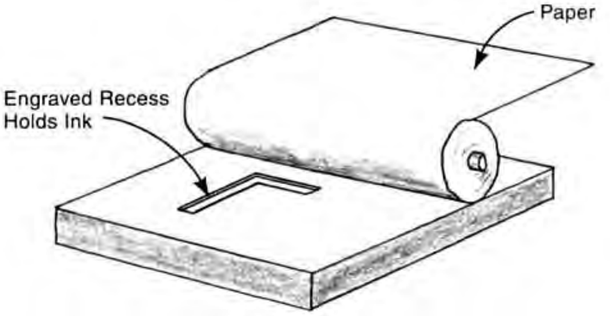

Fig. 9D3 The principle of intaglio (gravure) printing. The ink is held in a depression in the printing plate and is transferred to the paper when it comes into close contact with the plate.

Printing operation using a cylindrical plate are called *rotogravure*. The cylindrical plate rotates through a bath of liquid ink or is subjected to a spray or roller which liberally coats the cylinder's surface. A flexible metal doctor blade, that extends across the full length of the cylinder, then wipes the ink cleanly from the polished surface but not from the recesses. Walls of uniform height between the cells (recesses) support the doctor blade. The walls provide a contact and support surface for the doctor blade and ensure that the exact desired quantity of ink will remain in each cell. In the press operation, a sheet or web of paper (or other material) passes between the cylinder and a rubber covered impression roll, is pressed against the cylinder as it passes between the rolls, and is printed. The paper is given a positive electrical charge and the cylinder is grounded or given a negative charge. These opposite charges attract, aiding in drawing ink to the paper. Fig. 9D3a illustrates gravure printing.

In color printing, a separate cylinder is used for each color. After each color is printed, the paper web passes through a drying section where the solvent in the ink is evaporated. The process produces high-quality printing and color. However, the cost of the engraved cylinders necessitates that the process is limited to large-quantity printing so that these costs can be amortized. Web surface speeds

Previous Page

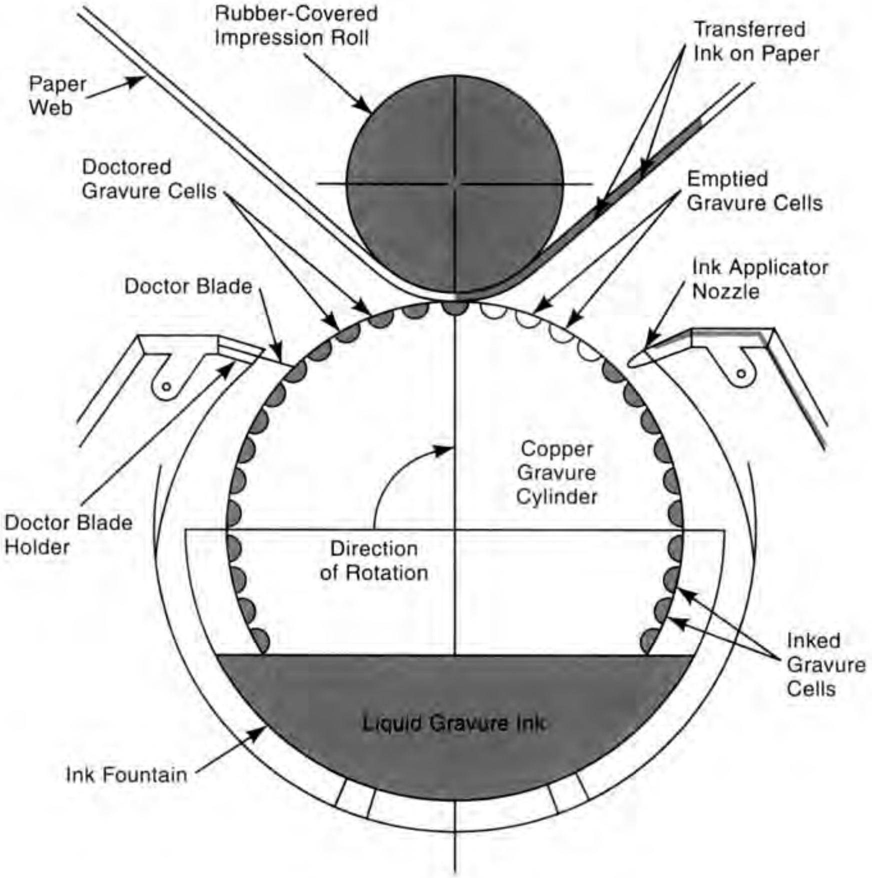

Fig. 9D3a Gravure printing *(from the McGraw-Hill Encyclopedia of Science and Technology, McGraw-Hill, New York. Used with permission.)*

can exceed 3,300 ft (1000 m) per minute. Magazines, catalogs and newspaper supplements are normally printed by rotogravure. The process is also used extensively in packaging and to print such products as shower curtains, wall coverings, table cloths, paper towels and decorative laminates.

Flat engraved plates rather than cylinders are used to print currency, bank notes, stock certificates and postage stamps.

D3b. ***making gravure plates*** - Almost all rotogravure plates for high-production applications are copper-plated steel cylinders that are engraved by computer-controlled electromechanical engraving machines. The engraving heads use cutting tools with fine diamond points. As many as eight such heads may be incorporated in one cylinder engraving machine.

One system (that was previously dominant and is no longer so, but still used) utilizes a special sensitized carbon tissue paper coated on one side with a layer of sensitized gelatin. The gelatin becomes a transfer film. The gelatin on the carbon tissue is sensitized by immersion in a solution of potassium dichromate. It is then contact printed through a gravure screen, a grid of transparent lines and opaque square dots spaced at 150 to 175 per in (60 to 70 per cm). Then the coated tissue is exposed again with a photographic film image of the material to be gravure printed. (The film image is a positive and its illustrations have not been projected through a halftone screen.) During these exposures, the gelatine is hardened by exposure to the light. It becomes hardest in the areas exposed to the most light, in white areas from the film positive and the grid lines. It is less deeply hardened in the

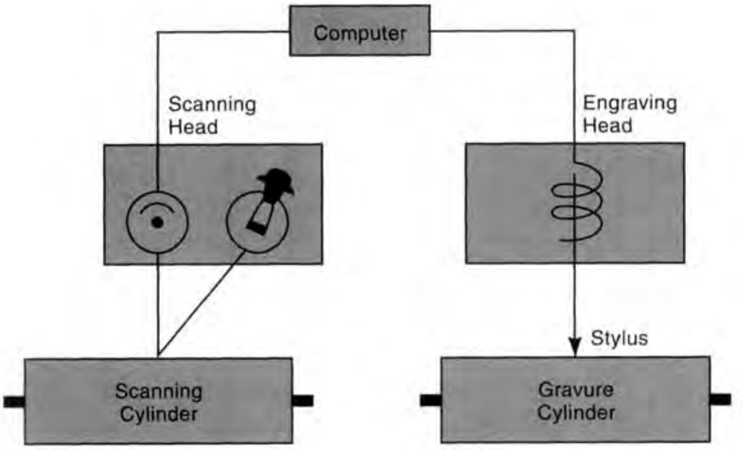

Fig. 9D3b The electromechanical system for making gravure plates. *(from the McGraw-Hill Encyclopedia of Science and Technology, McGraw-Hill, New York. Used with permission.)*

grayscale areas of any illustrations. It is not hardened in areas covered by lines and text. The twice exposed film is then moistened and pressed - with the gelatin side down - into contact with the copper surface of the cylindrical printing plate. The image is developed to produce a gelatin relief resist, and the carbon tissue is stripped off. Then the copper coating of the cylinder is etched with a ferric chloride solution. The depth of the etching corresponds to the degree of hardening of the gelatin resist. Etching is deepest where the gelatin is least hardened from the light exposure. No etching takes place where the clear lines of the screen or bright areas in the image fully expose the gelatin. Due to the exposure of the grid lines, even broad dark image areas consist of a series of separate cells. After etching, the plate may be chromium plated to improve wear resistance in printing.

A different sequence using electro-mechanical engraving is illustrated in Fig. 9D3b. The equipment has three major elements: scanner, computer and engraving head or heads. The scanner scans a photographic print of the material to be printed. The computer processes the scanning data and sends impulses to the engraving heads causing the diamond styli to move and engrave cells into a rotating cylindrical plate. The depth of the engraved cell at any one point corresponds to the intensity of the image at the corresponding point in the scanned photograph. The computer is programmed to provide unengraved grid lines between cells. The engraved cells vary in depth and area corresponding to the image tonal values they represent. Fig. 9D3b-1 illustrates how different tones in the original image are characterized in the printing plate surface.

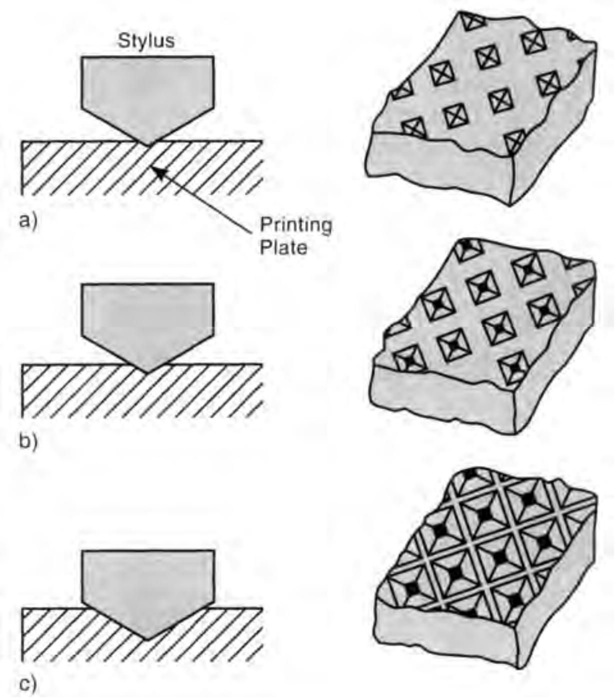

Fig. 9D3b-1 The depth of electromechanical engraved cells, their size and shape determines the different tones in gravure printing plates: a) highlights, b) middle tones, and c) shadows. *(from the McGraw-Hill Encyclopedia of Science and Technology, McGraw-Hill, New York. Used with permission.)*

There are other plate making methods. One process, called direct transfer, uses a light sensitive coating on the cylinder and exposure to light through a positive halftone film. Another method uses photosensitive polymers for the plate instead of copper-plated steel. The dark areas of the image to be printed are etched deeper in the plastic. Nylon is one material used for such plates because it has good resistance to wear from the doctor blade contact. This approach is useful for packaging and other printing runs for quantities under 100,000.[4] Another method uses laser energy instead of diamond-tip styli to engrave the plate. This method retains the scanning and computer-control aspects of the electromechanical procedure.

D4. ***stencil and screen printing (porous printing)*** - differ from the printing methods described above in that the ink (or other colorant) is not applied to a surface that transfers it to the printable substrate, but instead is applied directly to the surface to be printed through openings in a mask. The openings correspond to the image or text to be printed. The ink is applied or forced through these openings and onto the surface that receives the printing. Both methods are probably used more for printing on products or manufactured components, rather than on paper sheets, though they are used extensively for printing notices, posters and signs.

D4a. ***stencil printing*** - uses a sheet device, a stencil, with patterned openings. The stencil is held against the printable sheet (or a workpiece surface) and ink, paint, dye, stain or another paste-like colorant is applied through the openings. The ink can be applied by any of a variety of devices: brush, roller, spray, pad, or squeegee. The stencil can be of any sheet material that resists the coloring agent. Paper, sheet metal, fiber or plastic are all used to make stencils. Stenciling is commonly used to mark shipping cartons. When abrasive blasting is used instead of a coloring agent, glass, ceramic and stone workpieces can be permanently etched with the aid of stencils of suitable material.

D4b. ***screen printing (serigraphy) (silk screening)*** - is a refined method of stenciling. In addition to printing on paper, screen printing is often used to add decorative markings such as symbols, designs, product names, and trademarks as well as alphanumeric data to products and components. The stencil-like screen, now usually made from nylon, polyester or stainless steel fabric instead of silk, and tautly mounted on a rectangular frame, is coated with a solid material except in openings corresponding to the pattern to be marked. Ink or paint, in paste form, is spread on the screen and the screen is placed on the sheet or surface to be printed. Fixtures are usually used to insure accurate registration of the print. A rubber or polyurethane squeegee, operated manually or mechanically, is used to force the ink through the screen openings and onto the surface of the paper or other material to be printed. Fig. 9D4b illustrates the process.

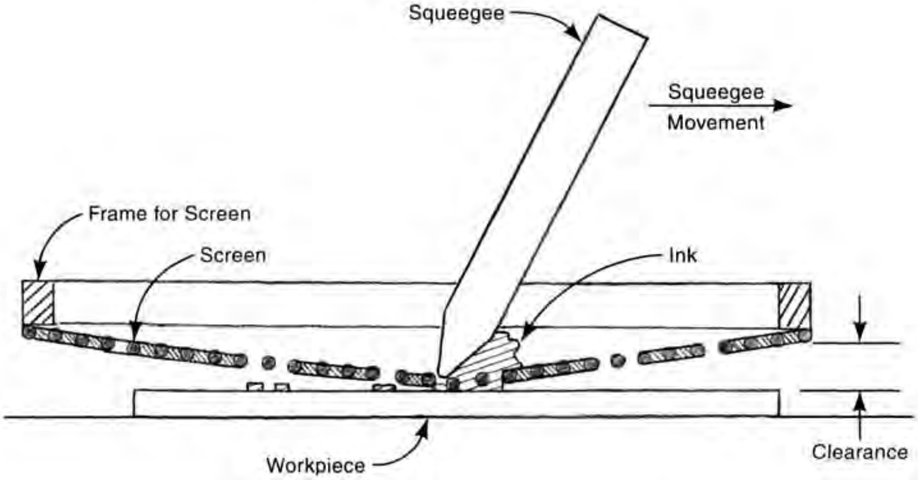

Fig. 9D4b The screen printing process. A flexible squeegee presses ink through the openings of a coated screen, leaving an image on the workpiece - a sheet of paper, other sheet material or product component that is positioned below the screen.

Successive operations on the same surface with different screens can result in multicolored markings.

Screen printing is used on paper but is also applied to fabrics, glass, plastics, leather, wood, ceramic and metal parts, painted surfaces for signs, posters and nameplates. The process is versatile enough to work well with surfaces of various shapes, as well as a variety of materials. Bottles and other glassware, barrels and other containers, t-shirts, hats, banners, appliances and commercial vehicle panels are often decorated by screen printing. The process is also used in the electronics field to deposit conductive, resistive or semiconductive patterns for circuit boards, keypads and membrane switches.

The density of the screen fabric ranges from 25 to more than 500 threads per in (10 to 200 per cm). The higher mesh counts are used when the image to be printed is highly detailed; low mesh counts are used for coarser images and for much textile printing.

There are a number of methods to provide the necessary screen openings. They range from simple manual cutting of openings in stencil material with a knife and then bonding the remaining material to the screen, to hand painting the nonprinting areas, and to several types of photoresist systems. The photoresist techniques are most common. One frequently used system employs a liquid photosensitive polymer that is coated on a screen, allowed to dry and then exposed to strong ultraviolet light that shines through a film positive of the image to be printed. The exposed areas on the screen harden and can be retained while the unexposed areas remain soft and are flushed away. What remains is a screen with openings corresponding to the image to be printed. Other photoresist methods use a polyester sheet that is wetted, applied to the screen, dried, and then processed in the same way as a screen coated with liquid polymer. Gelatin sheets are processed photographically before being adhered to the screen.

Screen printing is frequently performed manually with simple wooden fixtures to position the image correctly on the sheet or workpiece. In such cases, the operator supplies ink to the screen periodically and draws the squeegee manually across the inked screen for each printing. For large-quantity work, presses are available that hold the sheet or workpiece with vacuum or a fixture, position the screen with respect to the work, supply ink to the screen and operate the squeegee automatically. For truly high-production screen printing of web paper, textile fabric or other sheet material, cylindrically mounted screens are used with the squeegee inside the cylinder. As the material passes between the rotating screen and a backup roll, it is printed.

When screen printing involves several colors, each color is normally printed and dried separately, and fixtures or mechanisms ensure that each successive color is in proper registration. Drying may take place by evaporation or by curing with heat or ultraviolet light. Screen printing deposits a heavier coating of ink than normally results from other printing methods. This is desirable for product marking and outdoor applications where more durability is required. Heavier coatings also can add to the intensity of the color.

D5. ***electronic printing methods*** - are printing processes under the control of a computer. In contrast to the various mechanical printing processes described above, electronic printing requires no set of printing plates and no significant set up and run-in to insure proper alignment and proper coloration. Thus the one-time costs per document are low. On the other hand, electronic printing is not nearly as fast as the mechanical processes. However, image information can be changed from copy to copy, though the image recording must be repeated for each copy. Mechanical processes, then, are best suited for large quantity printing and long press runs. Electronic methods are best especially when the information printed is variable from copy to copy or for other short-run situations. Serial numbers, bar codes, product expiration dates, and invoice information are all variable but are suited to computer-controlled electronic printing.

D5a. ***laser printing*** - makes use of electrostatic attraction to make an image on paper. It utilizes a photo-receptor, which is a roller or *drum* coated with photosensitive material. The drum is initially given an overall positive charge by a nearby parallel corona wire or a charged roller. Digital data from a computer activates a laser that shines a narrow, coherent beam of light on the drum, "writing" the material to be printed as the drum revolves. A mechanism in the printer, directs the laser beam as necessary to trace the type fonts and lines of the image. The positive charge on the drum is discharged (removed) from the points contacted by the laser beam, but from only those points. The printer then subjects the drum to toner from a feeder roll or a cloud of toner. Toner is a fine powder with black or other pigments and particles of thermoplastic. The toner is positively charged so that it is attracted to the drum except for those areas that still retain the positive charge. The toner, then, sticks to the drum only at those points traced by the laser. The drum, with the powder image, then rolls across a sheet of paper that is moving on a belt below the drum. A negative charge, applied to the paper beforehand, draws the toner to the paper. The toner transfers to the paper, forming the exact image that was on the drum. The paper's charge is then neutralized by another corona wire. This prevents the paper from adhering to the drum. The paper then passes through the fuser, which is a pair of heated rollers. The heat from the rollers softens the plastic particles in the toner causing them to adhere to the paper and bond the pigment particles together. The paper then leaves the printer and the drum continues to rotate past the discharge lamp, which provides a bright light to erase any charges remaining on the drum. Then the drum surface passes the corona wire that applies the positive charge, and the process is repeated. An on-board microprocessor in the printer controls the operation of the laser, mirrors, lenses, corona wires, and other machine elements that all must work properly in sequence for the printing operation to proceed correctly. Fig. 9D5a illustrates the operation of a typical laser printer. Data fed to the printer comes from a word processor, desk-top publishing or other computer programs.

Laser printing, though quite slow compared to mechanical printing processes described above, is nonetheless very useful for small and moderate quantities. It is very widely used for business correspondence, home computing and other small and moderate quantity work.

D5b. ***copy machine printing*** - Xerox and other photocopier machines also utilize electrostatic attraction to make an image on paper with a sequence similar to that of laser printing. The key element of the copier is a drum (and, in some machines, a belt) coated with photoconductive material such as silicon, germanium or selenium. The drum or belt is given a positive static electrical charge by a nearby parallel corona wire subjected to a high voltage. Another corona wire imparts a positive charge to the copy paper. A white-light lamp inside the copier moves along the paper original, illuminating a narrow band as it passes. A mirror and lens arrangement focuses the reflected light and the image onto the rotating drum below. The reflected and focused light strikes the drum and neutralizes (discharges) the positive charge on the drum. This leaves the drum charged only at those points that correspond to printing, lines, or other dark points in the image being copied. Toner, a combination of fine powdered pigment and a thermoplastic, is a coating on very small beads that are stored in the machine's toner cartridge. The powder has been given a negative charge and the beads have a weak positive charge so that the powder adheres to them. The exposed areas of the drum pass rollers that have been coated with the beads of toner. The toner particles adhere to the drum surface but only to those points that still have a positive charge. (The exposed areas of the drum, corresponding to the background of the image copied, have no charge and do no attract the particles.) The copy paper, still strongly positively charged, then contacts the drum surface. The strong positive charge on the paper is greater than that on the drum and the toner is attracted to the paper and receives the exact pattern of toner that was on the drum. The paper is then heated with tubular quartz lamps and passes between two Teflon-coated rollers that compress the toner and bond it to the copy paper sheet.

D5b1. ***electrophotographic printing systems***4 - There are several production printing systems, similar in principle to photocopying machine printing, that are used to produce moderate-quantity work. They use liquid or solid toner, electrostatic drums and curing of the image by evaporation or heating/cooling. Some use light-emitting diodes as a light source. Most such equipment is capable of color printing, often by using separate printing units in tandem to process paper in web form, but some work by processing the print paper through the unit several times. Systems for printing on both sides of a web in color can have eight units, four for each side of the web. Web speed can range up to about 300 ft/min (90 m/min) of variable images. Sheet feed equipment can produce 4000 variable sheets per hour (1000 sheets per hour with 4-color printing from one drum.)

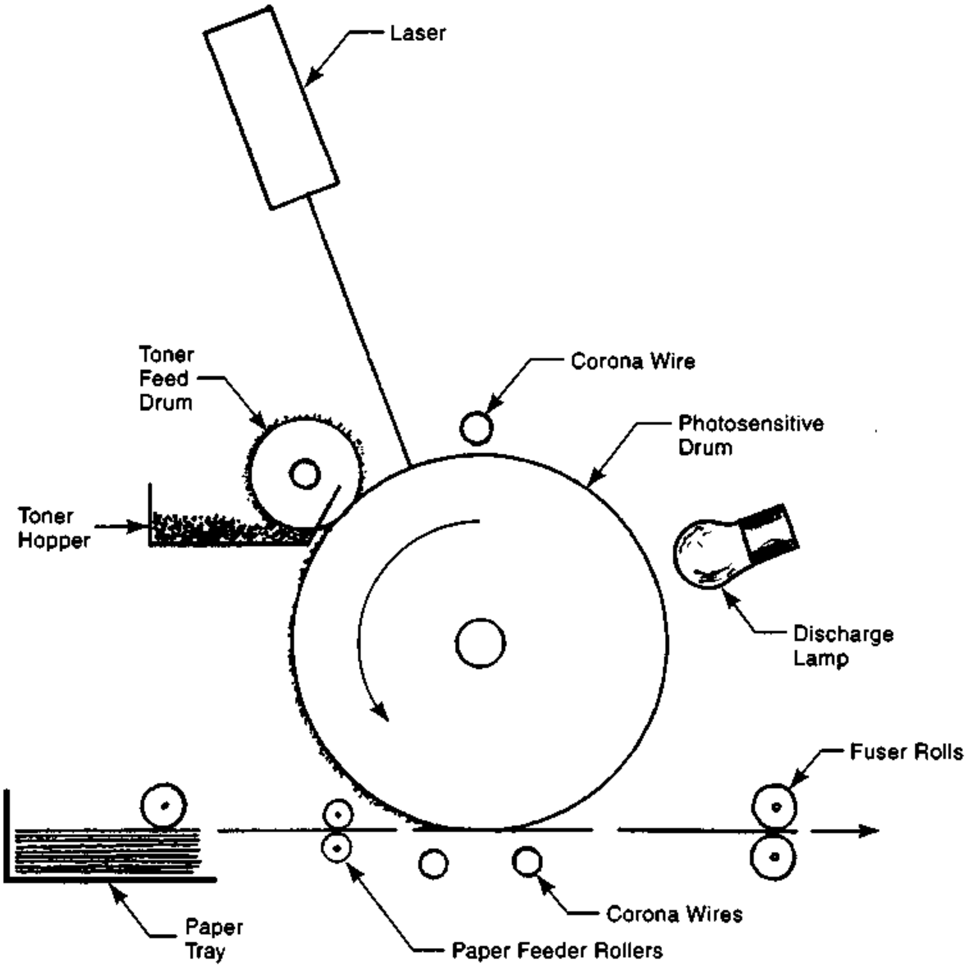

Fig. 9D5a A typical laser printer. The positively charged drum with a photosensitive coating is subjected to a laser beam that neutralizes the positive charge. Toner powder, also with a positive charge, is applied to the drum but adheres only where the positive charge on the drum has been neutralized. The toner is transferred to paper that contacts the drum and is fused to the paper by heated rollers.

D5c. ***ink-jet printing*** - Several varieties of the ink-jet process are in use, but all direct tiny droplets of ink to paper or other substrates without print head contact. There are no printing plates and the operation is computer controlled. Most systems use a bank of ink nozzles, each of which is controlled by the computer program. The computer activates the nozzles individually in quick succession and simultaneously as the nozzle moves across the paper and again as the paper is advanced underneath the nozzles. In some systems, an electric current passing below the firing chamber, heats the ink to produce a bubble of steam. The bubble expands, forcing the ink through the nozzle. When the bubble collapses, a vacuum is created in the print head. This draws more ink into the print head from the ink cartridge. This type of ink-jet printer may have as many as 600 nozzles.

In other printers, a piezo- crystal oscillates, pushing ink from the nozzle when it moves in one direction and, on the return oscillation, drawing more ink into the print head.

Another method uses solid sticks of wax-like ink. Heat melts ink from a stick and it is applied to the printing paper where it solidifies. High resolution and brilliant color can be achieved. The approach is usable on a variety of substrate materials.

The droplets in ink-jet printing are charged electrostatically and are deflected by electrostatic field plates under computer control to form images and characters. Printing in colors is fully feasible and ink-jet printers can produce picture quality equivalent to that of lithographs. Ink jet printing is most common for printing documents from personal computers. The advent of digital photography has opened the use of the ink-jet method for printing photographs. Ink jets are also used for printing address labels and expiration dates on food packages and other variable information such as serial numbers on products. Commercial ink jet equipment is used for billboards and advertising posters for buses, taxis, airports and bus terminals.[4]

D5d. ***magnetographic printing***[4] - uses a carbon-coated metal drum that is selectively magnetized by an array of computer-controlled electromagnetic writing heads. An image is generated when powdered magnetic toner is attracted to the magnetized drum. When the drum makes contact with paper, the toner image is transferred to the paper. The toner then is fused on the paper by a flash fusing device. Colors are dark and opaque except for some limited areas. The image can have infinitely-variable gray scales. After transfer of the toner, the drum is cleaned of toner and the magnetic image is erased. The drum is then ready for transfer of another image. The process can be repeated quite rapidly. The method is used for printing variable information such as that required on some business forms, direct mailings, lottery tickets, tags, labels and bar codes.

D5e. ***ion or electron deposition printing (ionography)***4 - In this process an electron cartridge produces negative electric charges on a heated dielectric aluminum oxide surface. The charges attract a special magnetic toner. The operation is computer controlled and is limited to single color printing or spot-color applications because the pressure of transferring the image and of fusing the toner can distort the printed surface. The system is used for variable printing in forms, invoices, reports, letters, proposals, tickets, tags and checks.

D5f. ***microcapsule printing***[3] - is a method for producing high-quality color reproductions in small quantities. The "printing plate" is paper impregnated with billions of microscopic-sized capsules of liquid dyes based on polymers with photosensitive properties. The plate is exposed to light reflected from the original image. This light hardens the polymer dyes in the micro capsules in proportion to the amount of light received, but capsules not receiving light still retain liquid dye. The paper to be printed and the exposed paper are placed together and run between a pair of pressure rollers. The pressure breaks the micro capsules and the varying amounts of the unhardened dye are deposited on the print paper.

D5g. ***thermal sublimation, dye sublimation, thermal wax and wax transfer printing*** - are a group of processes that use arrays of heating elements under computer control to heat sheets or ribbons of film with dye or wax-based pigments. The dyes or waxes vaporize and are transferred to the printing paper where they cool and solidify. Higher temperatures yield greater amounts of the particular dye where needed. Separate lengths of sheet or ribbon film each contain a dye of a different color: cyan, magenta, yellow and black. The process is repeated with each color on every printing sheet to produce a full color image. These processes are slow because of the repeated passes and the materials are costly. They are used only for limited quantity printing.

D5h. ***dot-matrix printing*** - involves a computer-controlled printer with a head containing an array of very small movable pins. The head moves across the paper and, as it does, one or more of the pins are driven electromagnetically to strike an inked ribbon that transfers a dot of ink to the paper at each point of impact. Enough dots are printed to form letters, numbers, punctuation marks and other characters. Because of their better quality and quiet operation, ink jet and laser printers have largely supplanted dot-matrix printers for personal computer use.

D6. ***sheet and web printing*** - All printing methods function when discrete sheets of paper are printed. In the simplest cases, sheets are manually positioned in a press and removed after the impression is made. In situations where the quantities are sufficient to justify an additional investment in equipment and set up costs for the print run, sheet feeding and removal may be automatic. Sheet methods may be required when heavy paperboard or metal are the substrate materials but otherwise are found only when quantities are small or moderate. For the highest levels of production, it is advantageous to use a continuous strip or web of paper from a roll and run the web through the press (or presses if there are several printing stages). Web printing uses cylindrical plates that roll on the paper as it passes through the press. This provides the fastest production rates. While sheet fed offset presses may print 280 sheets per minute, web presses may be capable of speeds of up to 2000 to 3000 ft/min (600 to 900 m/min). Newspaper web presses can produce more than 50,000 finished newspapers per hour[5]. No time is lost in paper handling between impressions. In addition to the labor savings and faster output rates, the use of a web aids in registering different imprints when color printing or other multiple impressions are involved and enables the paper to be printed more easily on both sides simultaneously. As many as 18 individual press units may be used in tandem on one web press line. Where it is advantageous, web printing equipment can include paper cutting, folding, stacking, stapling, glueing and bundling apparatus at the end of the printing line. Fig. 9D2a, which illustrates offset lithography, and Fig. 9D7, which illustrates multi-color printing, both also show web printing.

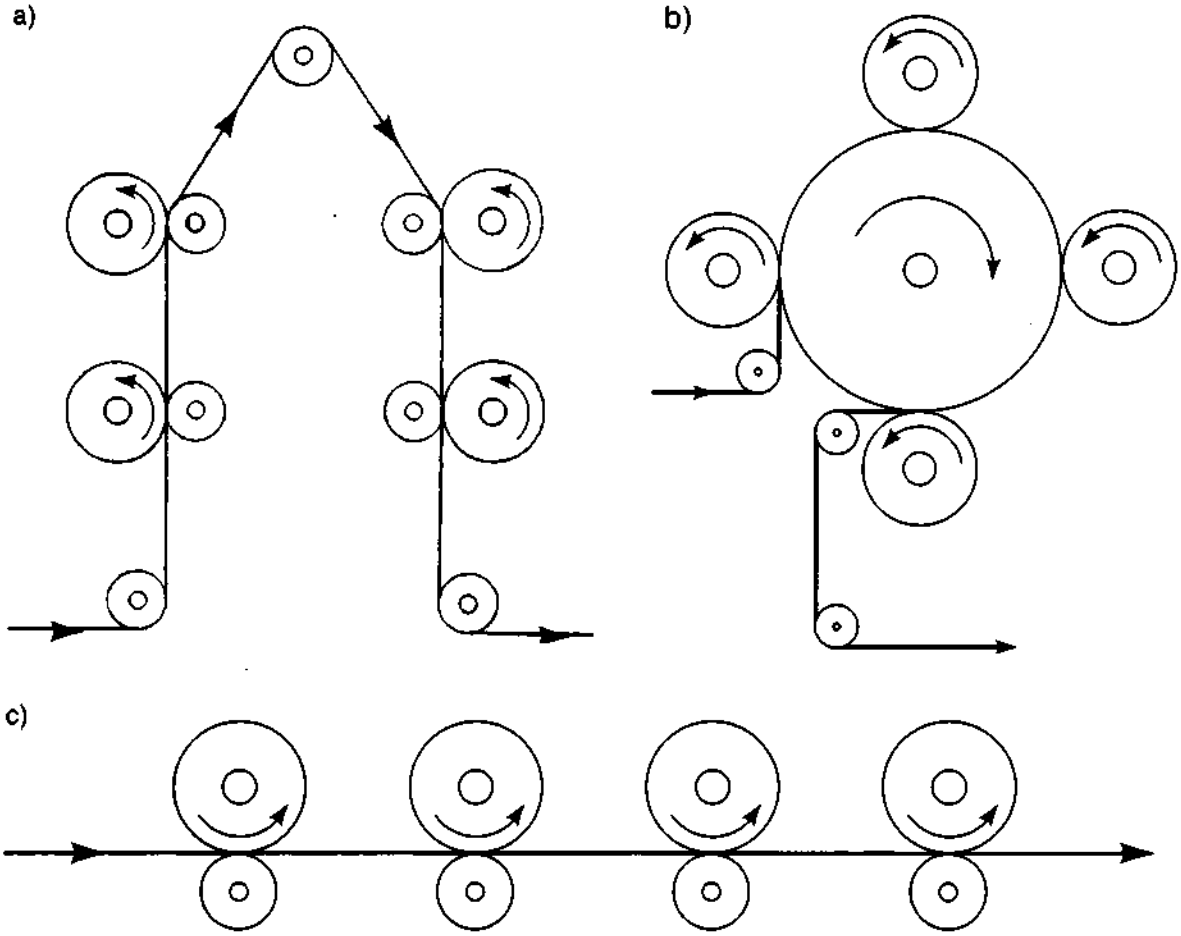

Fig. 9D7 Three arrangements for color printing shown with four printing cylinders, one for each color. Inking rollers are not shown for simplicity of presentation. In all, a web of paper passes between a separate printing cylinder for each color and an impression cylinder. a) stack arrangement of printing cylinders. b) one common large impression cylinder for all colors, c) in-line arrangement.

D7. ***color printing*** - For almost all processes (ink jet and micro-capsule printing are exceptions) color printing involves a series of successive printing operations in which different printing units each lays down only one color on the substrate. Four or more printing plates are used to provide full color. Colors are printed one on top of another in varying amounts. The colored inks are transparent when printed. All other colors are blends of the four. The plates for each color and for black are all different. The four colors are yellow, magenta (a purplish red), cyan (a blue shade) and black, which adds sharpness to the printed image. Yellow, magenta, and cyan are used instead of the three primary colors (red, green and blue) because the system that works best is a subtractive one, wherein each color on the printed sheet reflects color but also absorbs and blocks reflection of other colors. Yellow, magenta and cyan are complementary to red, green and blue.

Often, a greater number than four tandem printing units or successive operations on one press may be used, sometimes with other base colors, to provide a range of colors suitable for particular applications. Such arrangements are more likely when the material to be printed uses a large amount of certain colors, for example, in advertising and packaging printing where a particular trademarked color dominates.

To make the plates, *color separation* is performed, traditionally with color filters used to produce separate photographic images of the work to be printed. Current practice produces the color separations by scanner and computer. When multiple colors are printed, various arrangements of the plate cylinders and impression rolls are used to provide all the colors needed. Fig. 9D7 shows three common arrangements. Color printing requires precise positioning of the successive, single color impressions in order to combine the colors properly.

D8. ***halftone screens*** - Special approaches are needed when a letterpress, lithography, or other press system is used to print photographs or other images with a range of shades from light to dark. The shades may be between black and white or, with color, in various levels between brilliant and pale. A system is needed to create the intermediate tones when the printing system applies only solid colors or no colors. The method that has been used with letterpress and other printing systems for some time is to use a halftone screen to convert such images into ones that are printable. With halftone screens, the picture to be printed is projected through the screen. The screen breaks up areas of intermediate tone into a series of small, closely spaced dots. The darker the gray (or the more intense the color), the larger the dots and the smaller the spaces between them. With pale tones, the dots are smaller and have more space between them. The human eye, at a normal reading distance, is not capable of distinguishing dots spaced at 125 to the inch or closer and interprets the series of small dots as an overall area of uniform tone. The printing plate is thus made from the halftone image instead of the original picture. Fig. 9D8 illustrates how halftones represent different intensities of gray

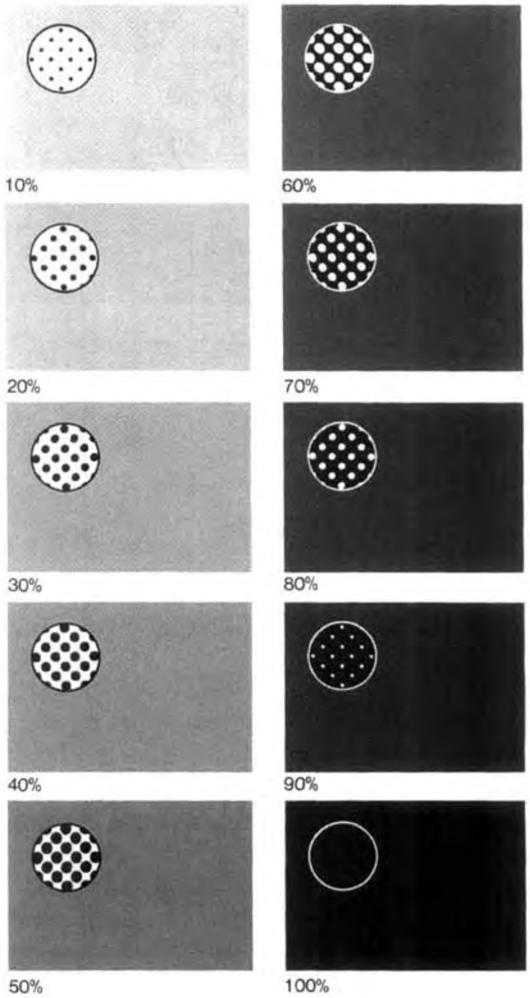

Fig. 9D8 Gradation and magnification of half tones. (*Reprinted with permission from the Pocket Pal, 18th ed., International Paper Company, 2000.*

tone. When electronic image scanning can be employed, the scanner can create the dots and no intermediate screen is required.

D9. ***pad printing*** - is a technique for printing small areas on products and parts. It is based on gravure printing and is described and illustrated in Chapter. 8, paragraph 8I7a of this handbook.

References

1. *The New Encyclopedia Britannica, Macropaedia, Vol. 21,* 1989, Chicago.
2. *The World Book Encyclopedia,* World Book, Inc., 2000, Chicago.
3. *Encarta Encyclopedia (from CD),* Microsoft Corp., 2004, Redmond, Washington.
4. *McGraw-Hill Encyclopedia of Science and Technology, Vol. 14,* 8th ed., McGraw-Hill, New York, 1997.
5. *Academic American Encyclopedia,* Arete' Publishing Co., Princeton, NJ, 1980.
6. *"What Makes Magnetography the Technology of Choice?"* - Nipson Digital Printing Systems, PLC, 2004. Internet: www.nipson.com.

Chapter 10 - Textile Processes

Textiles are fabrics (cloth) and other materials made principally from combinations of fibers. These fibers may be woven, knitted, braided, tufted, or made, by mechanical or chemical bonding, into non-woven fabrics. Yarns, sheets, films, foam materials, furs and leather may also be used in textile products. Garments, sheets, blankets, rugs and carpets, upholstery, drapes and curtains, nets, and various industrial components are important applications of textiles.

A. Textile Fibers

Fibers are long, hair-like, wire-like or thread-like materials whose lengths are 0.2 in (0.5 cm) or more and are greater than 100 times their diameters[2]. They come from plant, animal or mineral sources, or can be synthetic materials. *Textile fibers* are those that can be made into fabrics by the operations described below. Fibers occur or are made into different forms: *staple fibers* are relatively short fibers, normally under 6 in (15 cm) long, *filaments* are long or continuous fibers, *monofilament* is a continuous or long single fiber, usually a thick fiber, *tow* is a bundle of untwisted continuous fibers, *yarn* is a bundle of twisted fibers.[5]

A1. ***natural fibers*** - are those derived from plant, animal and mineral sources. The major ones are cotton, linen, wool and silk. Wool from sheep is the principal fiber produced from animal hair, but camel, llama, alpaca, guanaco, vicuna, rabbit, reindeer and goat (angora and cashmere) hair are also used.[5] Horse and cow hair are sometimes made into felt. Wool is sorted, graded, and scoured before it is processed into yarn.[5] Silk is an important fiber of natural origin, made principally from the cocoon of the silk worm. It is the only filament-length natural fiber. In the natural state, silk fibers are covered with a waxy or glue-like material that is removed by washing in warm water. The fiber is unwound from the cocoons and then spun into threads in a process called *throwing*. The other fibers from animal origin are in short lengths and are combined and spun together to form yarn before being made into fabrics. Broken fibers from silk manufacture are similarly processed.

Cotton is the most important textile fiber from plant sources and, in fact, is the most widely used textile fiber. It comes from the soft hairs that surround the cotton seed. The hairs are separated from the seeds by cotton gin machines, each of which consists primarily of a fixed comb and a rotating cylinder to which saw-like teeth are attached. Raw cotton is fed to the gin and is pulled by the saw teeth through the comb. The seeds, leaves and other debris, that cannot pass through the comb, are left behind. Fig. 10A1 illustrates the operation. (Cotton seeds from the ginning operation are made into cottonseed oil, cattle feed, and fertilizer.) Cotton is used extensively in clothing, household furnishings and industrial products.

Flax fiber, used to make linen cloth, is another important plant fiber. Flax is the designation for a family of plants. Some are grown for their seeds (from which linseed oil is made); others are grown for the fiber that comes from the stems of the plant. Several chemical and mechanical operations are performed to convert the flax into a fiber that can be spun. Hemp, jute, kenaf, ramie, abaca, and sisal

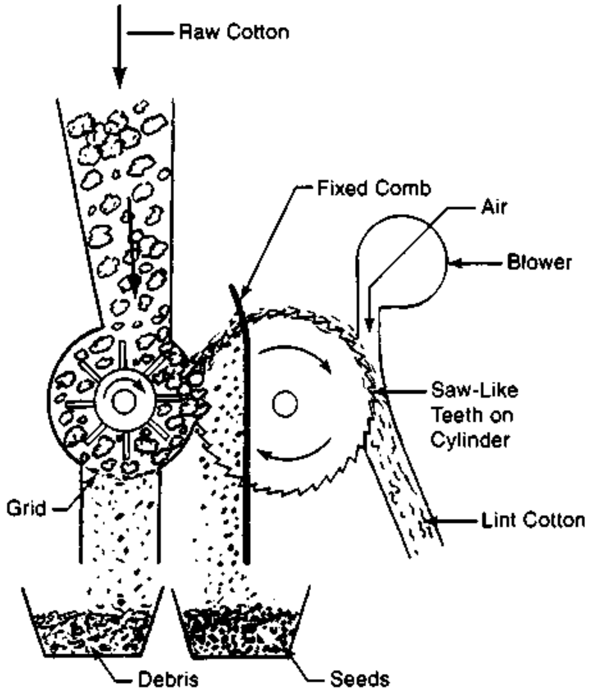

Fig. 10A1 A cotton gin. Raw cotton fed to the machine is thrown against fast-moving saw-like teeth on a cylindrical roller. Some debris in the cotton falls through a grid. The saw teeth pull cotton against the comb but cotton seeds are unable to penetrate the comb and fall from the machine. Cotton lint on the sawteeth is blown from the teeth and into a conveyor pipe.

are plant-sourced fibers that are made into coarser fabrics, rope and other cordage.

Asbestos is a general name of several natural mineral fibers. However, asbestos is no longer used in textiles because of health concerns despite its desirable properties of heat and chemical resistance.

A2. ***manufactured and synthetic fibers*** - Manufactured fibers used in textile manufacture come from both natural and man-made sources. Natural sources are either organic or inorganic. Organic materials include those from plant cellulose or rubber and those from manufactured polymers. Those from polymers, derived primarily from petroleum, coal and natural gas, include polyesters ("Dacron"), acrylics ("Orlon", "Acrylan" and "Dynel"), nylon, polyethylene, polypropylene, polyvinylchloride, polyurethane (spandex or elastane), and synthetic rubbers. Synthetic fibers made from cellulose include rayon, acetate and triacetate. Inorganic fiber materials include metal and glass.

Continuous glass fibers are made by drawing molten glass to very fine diameters. These are used in curtains and draperies and other applications where fire resistance and resistance to deterioration from sunlight and moisture are needed. Glass woven fabrics and unwoven staple fibers of glass and ceramics are also used for plastics reinforcement.

Metal fibers are made by cold drawing metal wires to fine diameters. (See 2B2.) Gold and silver fibers are sometimes used in fabrics for decoration. Conductive metal fibers may be incorporated to dissipate static electrical charges.

Synthetic fibers from thermoplastics are produced by extruding the molten plastic through extrusion dies (*spinnerets*) into a stream of cold air that cools and solidifies the plastic. (The operation is referred to as *melt spinning.*) The spinnerets have many very small die openings. The thermoplastics are similar to those of the same basic materials when they are used for making molded products, but modifications may be made for use in textile fiber applications. Nylon is an important synthetic fiber. After extrusion, fibers are drawn to approximately four times their original length, which aligns the molecules to provide much greater strength[3]. The fibers are often textured prior to use. Fabrics made from nylon are used in hosiery, undergarments, upholstery, draperies, parachutes and carpeting. Polyester is another important synthetic fiber material. Several varieties are used, but PET (polyethylene terephthalate) is the most common. Spun polyester fibers are used in clothing, usually blended with either cotton or wool. They are also used in carpeting. Acrylic fibers are made from polyacrylonitrile copolymerized with other materials. The fiber is textured to provide wool-like properties and is used with wool or nylon, or by itself, in socks, sweaters, blankets and carpets.

Viscose rayon is made from wood pulp that is treated to form a thick liquid. This liquid is extruded into a mild acid bath that converts the filaments back to pure cellulose. (The operation is referred to as *wet spinning.*) Acetate and triacetate fibers are made by treating cellulose with acetic anhydride to

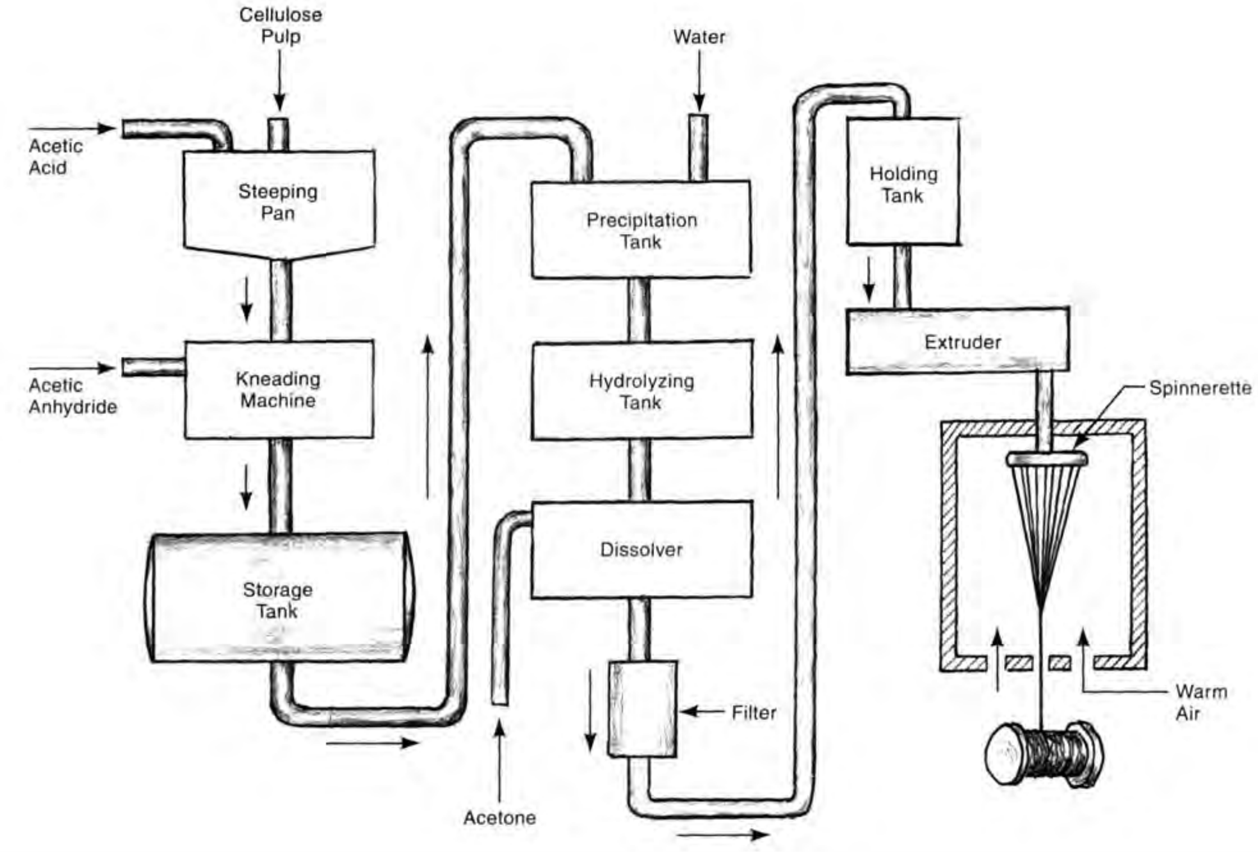

Fig. 10A2 The manufacturing process for acetate fiber.[4]

produce triacetate. To make acetate, wood pulp or cotton linters (short fibers that remain stuck to cotton seeds after ginning) are soaked in acetic acid. A small quantity of sulfuric acid is added. The mixture is then aged at a controlled temperature and mixed with acetic anhydride, producing liquid cellulose acetate. Additional water is added and the cellulose acetate precipitates. After being dried, the cellulose acetate, in the form of flakes, is dissolved in acetone and filtered repeatedly. The acetate is then in the form of a viscous liquid suitable for extruding. It is extruded through a spinneret into a chamber of warm air that evaporates the solvent[4]. (The operation is called *dry spinning.*[3]) Fig. 10A2 illustrates the process.

Carbon and graphite fibers, used as reinforcements in plastic parts, are made by heating acrylic and rayon fibers to a temperature in the range of 1800 to 4500°F (980 to 2480°C) to carbonize the material.

B. Yarn Making (Spinning)

Yarns are continuous strands of fibers that can be woven or knitted into fabrics. The term, "spinning" refers both to the final yarn-making operation that puts a twist in the yarn (B5 below), and also to the entire sequence of operations that convert raw fibers into usable yarns. Yarn making from staple fibers involves picking (opening, sorting, cleaning, blending), carding and combing (separating and aligning), drawing (re-blending), drafting (drawing into a long strand) and spinning (further drawing and twisting)[3]. Silk and synthetic filaments are produced by a less extensive procedure. Current high-production yarn-making operations are performed on integrated machines that perform this entire sequence as one combined operation.

B1. ***picking (including opening and blending)*** - includes the separation of the raw fibers from unwanted material: leaves, twigs, dirt, any remaining seeds, and other foreign items. The fibers are first blended with fibers from different lots or other sources to provide uniformity. (They also may be blended with different fibers to provide improved properties in the final fabric.) When cotton fibers are processed, the raw cotton is run through a cotton ginning operation and then undergoes a cleaning sequence before it is pressed into rectangular bales for shipment to the textile mill. There, the picking starts with a blending machine operation. Bales are opened and cotton from several lots is fed to the machine. The cotton then proceeds to an opening machine that opens tufts of cotton with spiked teeth that pull the fibers apart. Up to three stages of picking follow, after which the cotton is often in the form of a *lay*, a roll of cotton fiber about 40 in (1 m) wide, 1 in (25 mm) thick and weighing about 40 lb (18 kg)[1]. Figs. 10B1a, 10B1b and 10B1c show the blending, opening and picking operations.

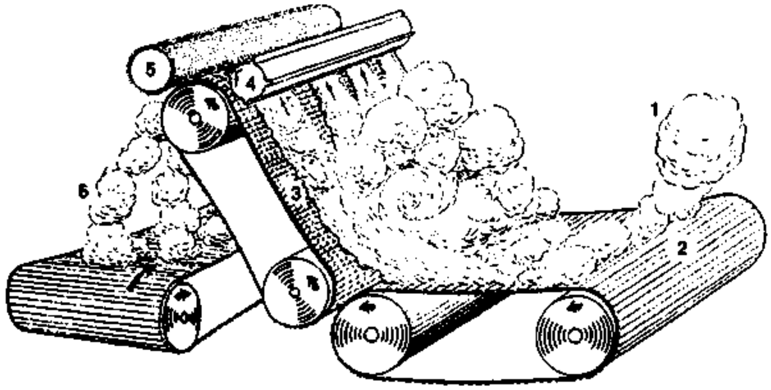

Fig. 10B1a Blending and feeding cotton fibers. Cotton from bales (1), is dropped onto an apron conveyor (2), and moves to another apron conveyor (3), whose surface is covered with spikes. The spikes carry the cotton upward where some of it is knocked off by a ribbed roller (4). The cotton knocked back mixes with cotton carried by the spiked apron. Cotton that passes the knock-back roller is stripped off by another roll (5) and falls (6) to a conveyor that carries it to the next operation. (*Illustration used with permission, Dan River Inc.*)

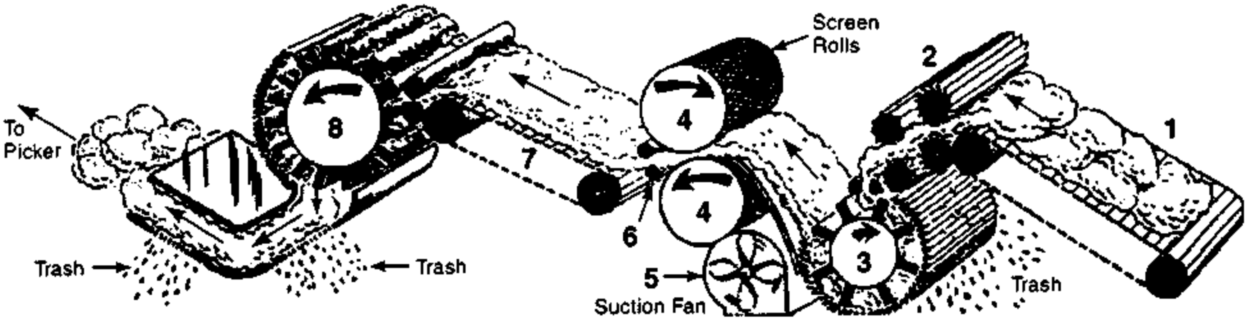

Fig. 10B1b Opening cotton fibers: Cotton from the blending operation falls on an apron conveyor (1) and passes between feeder rolls (2) to a beater cylinder (3). The beater cylinder has rapidly rotating blades that take small tufts of cotton from the feeder rolls, loosen the bunches, remove trash, and move the cotton to the pair of screen rolls (4). The surfaces of these rolls are covered with a screen material. Air is drawn through the screens by a fan (5), pulling the cotton against the screens and forming a web. Small rolls (6), pull the cotton from the screen rolls and deposit it on another conveyor (7), that carries it to another beater (8), that removes more trash. The cotton then moves to the picker operation. (*Illustration used with permission, Dan River Inc.*)

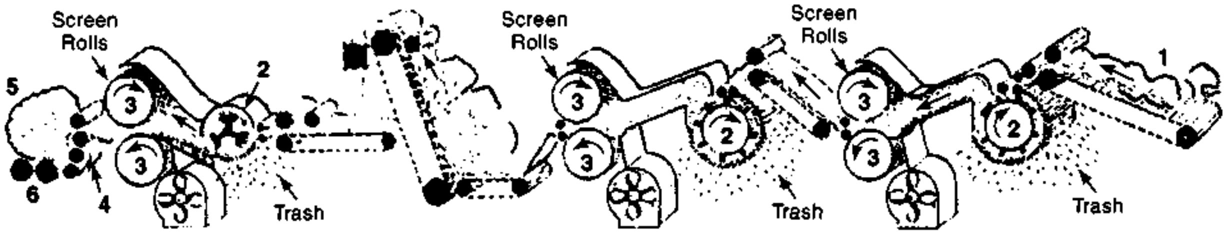

Fig. 10B1c Picking cotton fibers: Cotton from the opening operation falls on an apron conveyor (1) which moves it to the first of a series of beaters (2), and screen rolls (3). The beaters and screen rolls in the series are all similar but are progressively more refined as the cotton moves through the equipment. Each beater removes more trash from the cotton. When it reaches the output section (4), the cotton is in the form of a web or lap that is wound into a *lap roll* (5) by winding rolls (6). The lap roll in then ready to be transported to the carding equipment. (*Illustration used with permission, Dan River Inc.*)

B2. ***carding*** - is a process similar to combing and brushing. It disentangles bunches and locks of fibers and arranges them in a parallel direction. It also further eliminates burrs and other foreign materials and fibers that are too short. The operation is performed on cotton, wool, waste silk, and synthetic staple fibers by a carding machine that consists of a moving conveyor belt with fine wire brushes and a revolving cylinder, also with fine wire hooks or brushes. The fibers from the picking operation are called "picker lap", and are fed between the belt and the cylinder whose motions pull the fibers in the same direction to form a thin web. The web is fed into a funnel-like tube that forms it into a round rope-like body about 3/4 in (2 cm) in diameter. This is called a *sliver* or *card sliver*. The carding operation is illustrated in Fig. 10B2.

B3. ***combing*** - is an additional fiber alignment operation performed on very fine yarns intended for finer fabrics. (Inexpensive and coarser fabrics are made from slivers processed without this

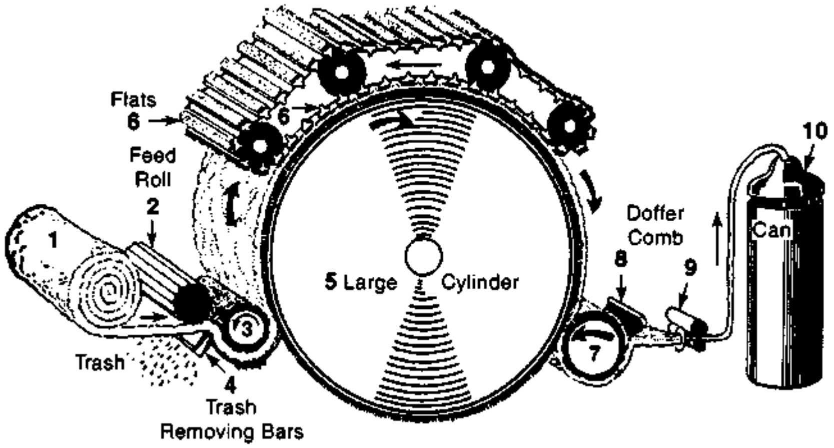

Fig. 10B2 Carding cotton fibers: The lap (1) from the picking operation is unrolled and fed by the feed roll (2), to the *lickerin roll* (3), which has wire shaped like sawteeth. The lickerin roll moves the lap against cleaner bars (4), that remove trash, and passes it to the large cylinder (5). The surface of the large cylinder holds the cotton with thousands of fine wires. The *flats* (6), with more fine wires, move in the direction opposite to that of the large cylinder. The cotton remains on the large cylinder until it reaches the *doffer cylinder* (7), which removes it from the large cylinder. A *doffer comb* (8), vibrates against the doffer cylinder and removes the cotton from it. The cotton, in a filmy web, passes through condenser rolls (9), and into a can through a coiler head (10). The subsequent operation is either combing or drawing. (*Illustration used with permission, Dan River Inc.*)

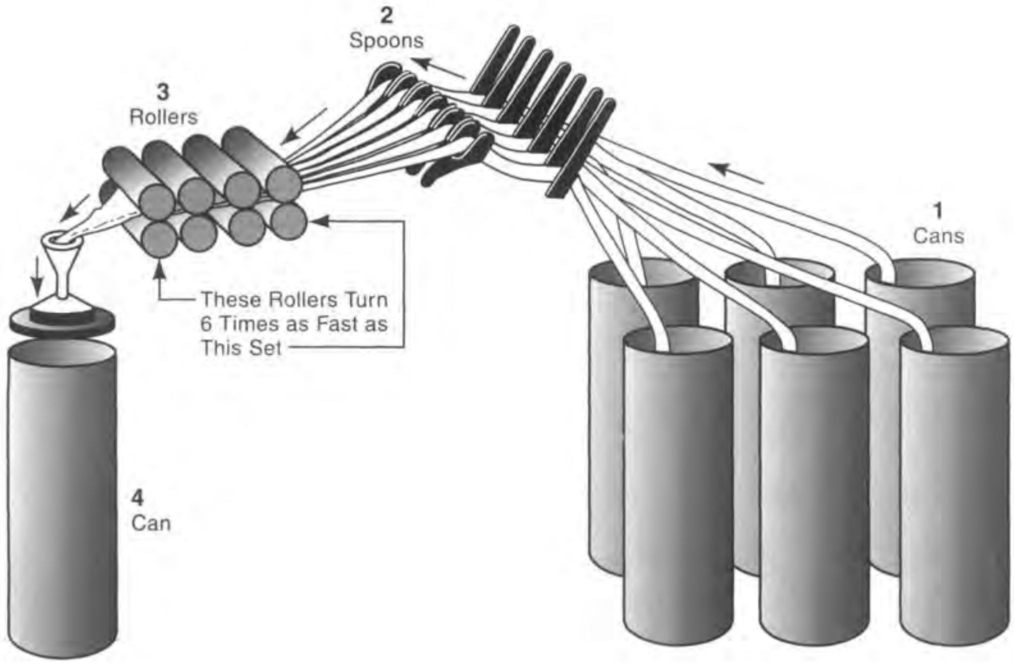

Fig. 10B4 Drawing: Cans (1), filled with slivers from the carding operation, feed the slivers to the drawing frame. The slivers pass through *spoons* (2), that guide the slivers and stop the equipment if any should break. The rollers (3), turn successively faster as the slivers move through them, reducing the size of the slivers and increasing their length approximately sixfold. At this point, the slivers are combined into one which is deposited into a can (4), by a coiler head. The sliver fibers are much more parallel, and the combined sliver is much more uniform after the operation, which is usually repeated for further improvement of the cotton slivers. (*Based on an illustration from Dan River, Inc. Used with permission.*)

further refining.) Fine-tooth combs are applied to the sliver from carding, separating out the shorter fibers, called *noils*, and aligning the longer fibers to a higher level of parallelism. The resulting strand is called a *comb sliver*. With its long fibers, the comb sliver provides a smoother, more even yarn.

B4. ***drawing (drafting), (re-blending)*** - After carding and, if performed, combing, several slivers are combined into one strand that is drawn to be longer and thinner. Drawing frames have several pairs of rollers through which the slivers pass. Each successive pair of rollers runs at a higher speed than the preceding pair so that the sliver is pulled longer and thinner as it moves through the drawing frame. The operation is repeated through several stages. The drawing operations produce a product called *roving* which has less irregularities than the original sliver. Afterward, the finer sliver is given a slight twist and is wound on bobbins. Fig. 10B4 illustrates the drawing operation.

B5. ***spinning (twisting)*** - further draws out and twists fibers to join them together in a continuous yarn or thread. The work is performed on a spinning frame after drawing. The twist is important in providing sufficient strength to the yarn because twisting causes the filaments to interlock further with one another. The roving passes first through another set of drafting rolls, resulting in lengthened yarn of the desired thickness.

There are three kinds of spinning frames: ring spinning, open-end (rotor) spinning, and air-jet spinning. With the common ring spinner, the lengthened yarn is fed onto a bobbin or spool on a rotating spindle. The winding is controlled by a traveler feed that moves on a ring around the

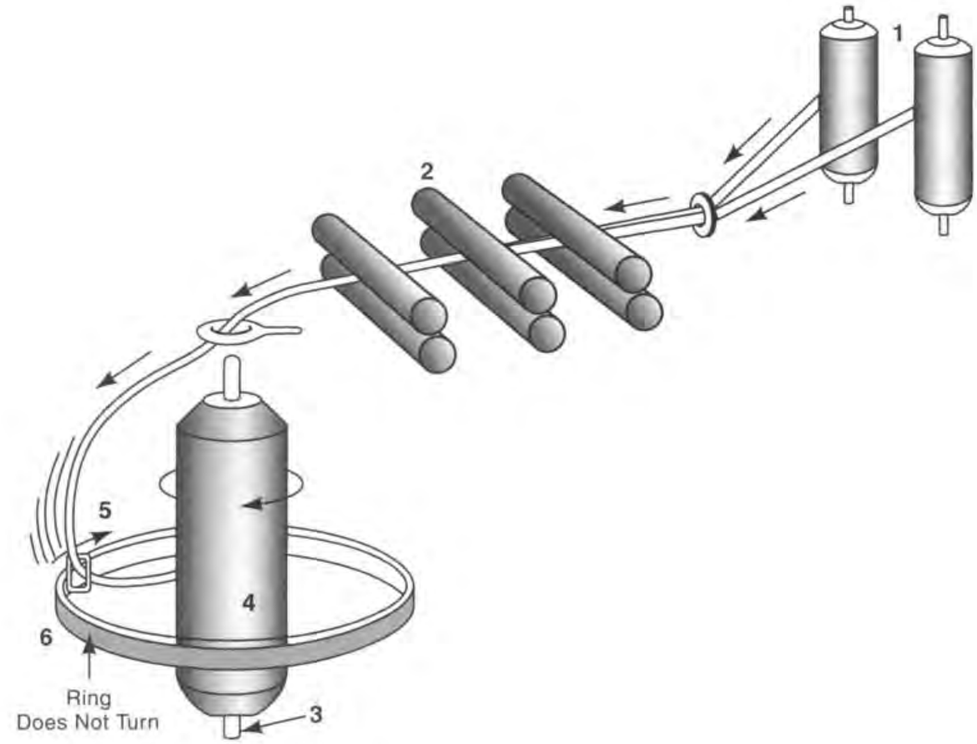

Fig. 10B5 Ring spinning. Spun sliver from the drawing operations, which is then called *roving*, and is wound on bobbins (1), and is fed through another series of drawing rollers (2), that further draw the strand to its final desired thickness. A larger bobbin (4) on a rotating spindle (3), turns at a constant speed. The speed of the final pair of drawing rollers is set a the speed that delivers the yarn so that it is twisted by the desired amount as it is wound on the bobbin. The yarn is guided by the traveler (5), which slides around the bobbin on the ring (6). Because of some drag on the traveler, the yarn winds on the bobbin at the same rate of speed as it is delivered by the final pair of rollers. (*Illustration used with permission, Dan River Inc.*)

spindle but at a slower speed than that of the spindle. The result is a twisting of the yarn. The yarn guide oscillates axially during winding to distribute the yarn neatly on the bobbin. The yarn can then be used to weave or knit textile fabrics or to make thread, cord or rope. Staple yarns, made from shorter fibers require more twist to provide a sufficiently strong yarn; filaments have less need to be tightly twisted. For any fiber, yarns with a smaller amount of twist produce fabrics with a softer surface; yarns with considerable twist, hard-twisted yarns, provide a fabric with a more wear resistant surface and better resistance to wrinkles and dirt, but with a greater tendency to shrinkage. Hosiery and crepe fabrics are made from hard-twisted yarns.[5] Fig. 10B5 illustrates ring spinning.

B6. ***spinning synthetic fibers*** - The term "spinning" is also used to refer to the extrusion process of making synthetic fibers by forcing a liquid or semi-liquid polymer (or modified polymer, e.g., rayon) through small holes in an extrusion die, called a spinneret, and then cooling, drying or coagulating the resulting filaments. The fibers are then drawn to a greater length to align the molecules. This increases their strength. The monofilament fibers may be used directly as-is, or may be cut into shorter lengths, crimped into irregular shapes and spun with methods similar to those used with natural fibers. These steps are taken to give the synthetic yarns the same feel and appearance as natural yarns when they are made into thread, garments and other textile products. (Section A2, above, describes wet and dry spinning methods of making rayon and acetate fibers.)

C. Weaving

Weaving is the interlacing of yarns in a regular order to create a fabric . The operation is performed in a machine called a *loom*. Two sets of yarns are interlaced, almost always at right angles to each other. One, called the *warp*, runs lengthwise in the loom; the other, called the *filling*, *weft* or *woof*, runs crosswise. Woven fabric is normally much longer in the warp direction than it is wide, that is, in the weft direction. Warp yarns are fed from large reels called *creels* or *beams*. Typically, these hold about 4500 separate pieces of yarn, each about 500 yards (450 m) long.[3] The filling yarns are fed from bobbins, called quills, carried in shuttles (hollow projectiles) that are moved back and forth across the warp yarns, passing over some and under others. The shuttle is designed so that the yarn it carries can unwind freely as the shuttle moves. Each length of yarn, fed from the shuttle as it moves across the loom, is called a *pick*. The yarn folds over itself at the end of each pick and forms another pick as the shuttle returns. When the yarn in a particular shuttle is exhausted, current production looms have automatic devices that exchange the empty quill with a full one.

Looms perform the following functions: 1) raising selected warp yarns, or *ends*, with suitable *harnesses*, consisting of frames of *heddles*, with taut vertical wires and eyelets, or strips with openings in the middle. There is one heddle for each end that is threaded through the eyelet. The heddles guide and separate the warp yarns, raising some of them to make room for the shuttle during the pick. This action is called, *shedding*, and the space between the warp yarns is called the *shed*. Simple weaves require only two harnesses; complex weave patterns may require as many as 40^3. 2) *picking*, laying a length of the filling or weft yarn between warp yarns from the shuttle (a hollow projectile that holds weft yarn inside) as it moves across the shed. 3) *battening* or *beating in*, forcing the filling yarn from the pick against the just-formed cloth next to the previous pick. This step is necessary because the shuttle requires some space in its movement across the loom and it is not possible to deposit the pick closely against the previous picks. Battening is done with the *reed*, which is a grating of parallel vertical wires between the warp yarns. 4) *taking up*, winding the cloth, as it is formed, onto a take up reel, the *cloth beam*. 5) As the cloth is taken up, warp yarn is released from the warp beam. This action is called *letting off*. Fig. 10C illustrates major loom operations.

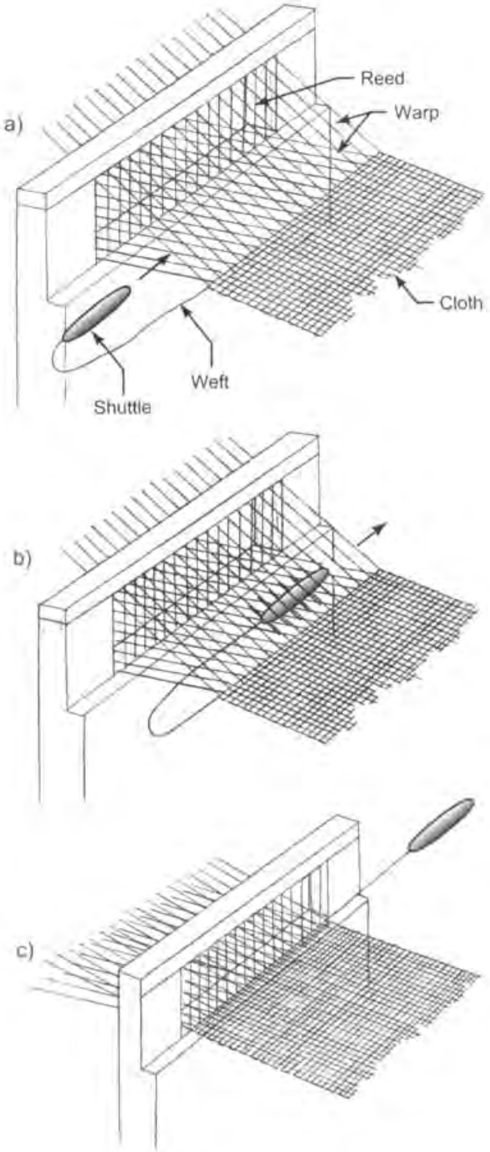

Fig. 10C A typical loom in operation (weaving): a) shedding, raising some warp yarns to make room for the shuttle, b) picking, laying the weft (filler) yarn across and between warp yarns, c) beating in, pushing the reed against the last filler yarn against the woven cloth.
]]>

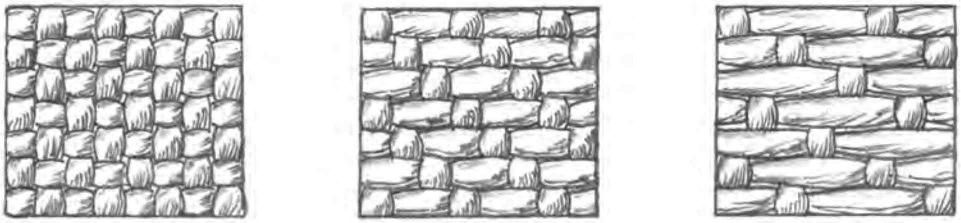

a) b) c)

Fig. 10C-1 Three basic weave patterns. a) *plain weave*, also called *taffeta*. Filling yarns pass over and under alternate warp yarns. Other plain weaves are *broadcloth, muslin, batiste, percale, seersucker, organdy, voile*, and *tweed*. b) *twill weave*. Filling yarns pass over two warp yarns and under a third, and repeat the sequence for the width of the fabric. The next filling yarn repeats the sequence but shifts one warp yarn sideways, creating a diagonal pattern. *Herringbone, serge, jersey, foulard, gabardine, worsted cheviot*, and *drill* are twill weaves. c) *satin* weave. Filler yarns pass over a number of warp yarns, four in this illustration, and under the fifth. *Damask, sateen*, and *crepe satin* are satin weaves. Exposed yarns reflect light and give the weave its sheen.

In the simplest weaving arrangement, alternate warp yarns are over or under the shuttle as it moves in one direction and the warp yarn positions are reversed for the return stroke of the shuttle. This weave can be made on a loom with only two harnesses. [See view a) of Fig. 10C-1.] In other arrangements, several warp yarns may be moved upward or downward together, or several filling picks may take place before the warp yarns change position. In still other cases, the warp yarns are raised or lowered with respect to the picks in some predetermined sequence, creating a pattern in the appearance of the weave. These patterns may affect the feel and strength of the woven fabric. Such weaves may require looms with five or more harnesses.

The warp yarns may be coated with a temporary sizing for protection against damage during the operation. The process of applying this coating by taking yarn from a large rack, called a *creel*, passing it through comb guides and through a bath of starch, and winding it on a warp beam, is called ***beaming*** or *slashing*.

Weaving is the most widely used method for making cloth. It is simple, inexpensive, suitable for high-quality fabrics, and adaptable to special effects. Garments and household and industrial fabrics are made with the method. Fig. 10C-1 illustrates three of the most basic weave patterns. Fig. 10C-2 shows the major components of a simple loom.

C1. ***Jacquard loom weaving*** - Jacquard-type looms are looms with an automatic, selective method for *shedding*, the lifting of certain warp yarns for each cycle of the loom. The mechanism permits the use of continuously varying shedding patterns, to create corresponding patterns in the woven cloth. Complex patterns, including pictures, can be woven into the cloth. The original Jacquard process used a series of perforated cards to control the operation. Needle-like components, connected to hooks that controlled the heddles, passed through holes in the cards, and raised the warp yarns. Each heddle moved independently of the others. Where there were no holes, the needles did not move through and the heddles were not raised. The cards were moved with each cycle of the loom, creating a variable weaving pattern corresponding to the hole patterns in the cards. Current Jacquard looms use sophisticated electronic means to control the pattern of shedding. Jacquard loom weaving is used in making upholstery and drapery fabrics, in table linens and in some garments. Damask, brocade, brocatelle, matelasse and tapestry fabrics are made on Jacquard looms.

C2. ***automatic bobbin changing*** - Because of space and size limitations, the amount of filling yarn that can be carried in a shuttle is also limited. Bobbins in shuttles must be replaced when the yarn is exhausted. As noted above, this operation has been automated. Automatic bobbin loaders sense when the filling yarn is exhausted, remove empty bobbins and insert full ones when the shuttle is momentarily stationary. The operation does not reduce the speed of the loom.

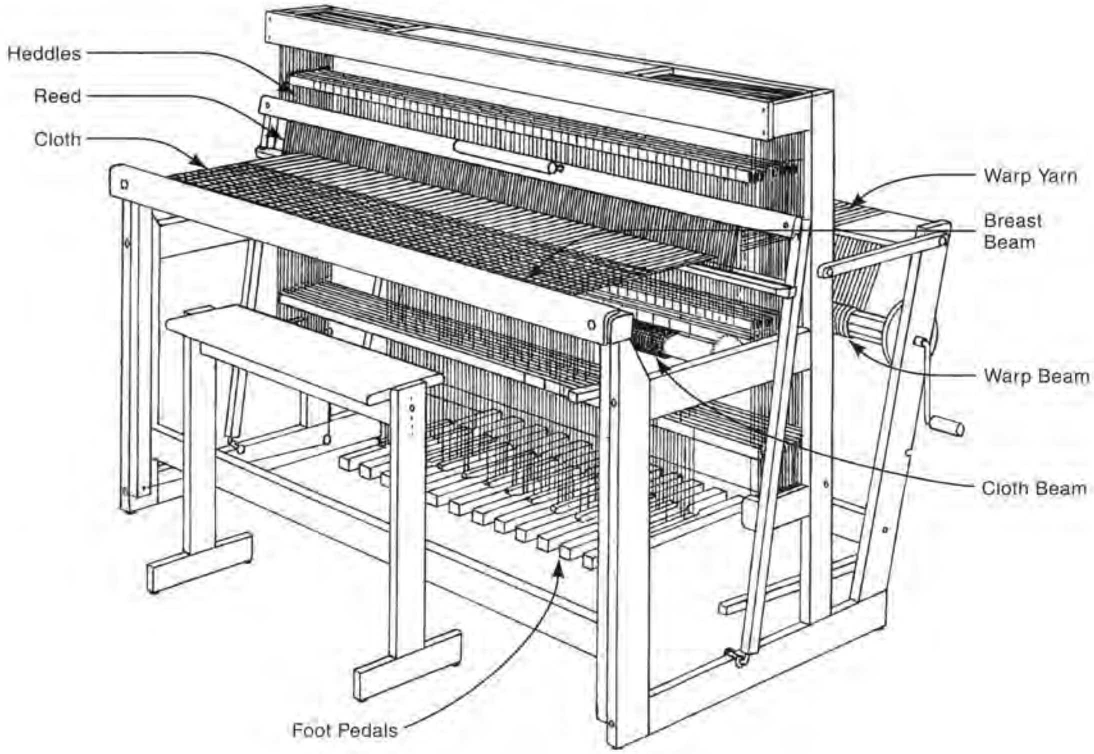

Fig. 10C-2 The major components of a loom illustrated by a hand-operated unit used for craft work. (*Courtesy Louet Sales, Prescott, Ontario, Canada.*)

C3. ***shuttle-less looms*** - Many current production looms do not use shuttles. In some looms, air or water streams propel the end of the filling yarn for each pick. In others, dummy shuttles pull the filling yarn but do not carry a bobbin. The rapier method uses an arm or tape-like machine element that grasps the filling yarn and pulls it across the web of warp yarns. One arm usually feeds the yarn halfway across the loom and an arm on the other side grasps the end of the filling yarn and pulls it the rest of the way across. Newer looms simply propel the end of the filling yarn across the loom by inertia. All these arrangements provide quieter operation, reduced wear, elimination of the need to protectively coat the warp yarn, and increased weaving production.

C4. ***pile weaving*** - is usually a plain weave in which either the filler or the warp yarn is drawn from the fabric to form loops between the intersecting yarns. The loops provide a thickness to the cloth. Turkish toweling is made from pile weaves with the loops uncut. Velvet is a pile fabric, but the loops are cut. In another method, special looms weave two fabrics face-to-face simultaneously. They are connected together by pile yarns. When the pile yarns are cut, two fabrics result, each with a pile. The process is less costly than weaving individual fabrics with a pile which must then be cut. Woven rugs and carpets are pile fabrics.

D. Knitting

Knitting is fabric- or garment-making by forming a series of interlocking loops in a continuous yarn or a set of yarns. In production situations, the work is carried out through the movement of hooked needles. (Hand knitting is normally performed with straight needles.) Each row of loops is

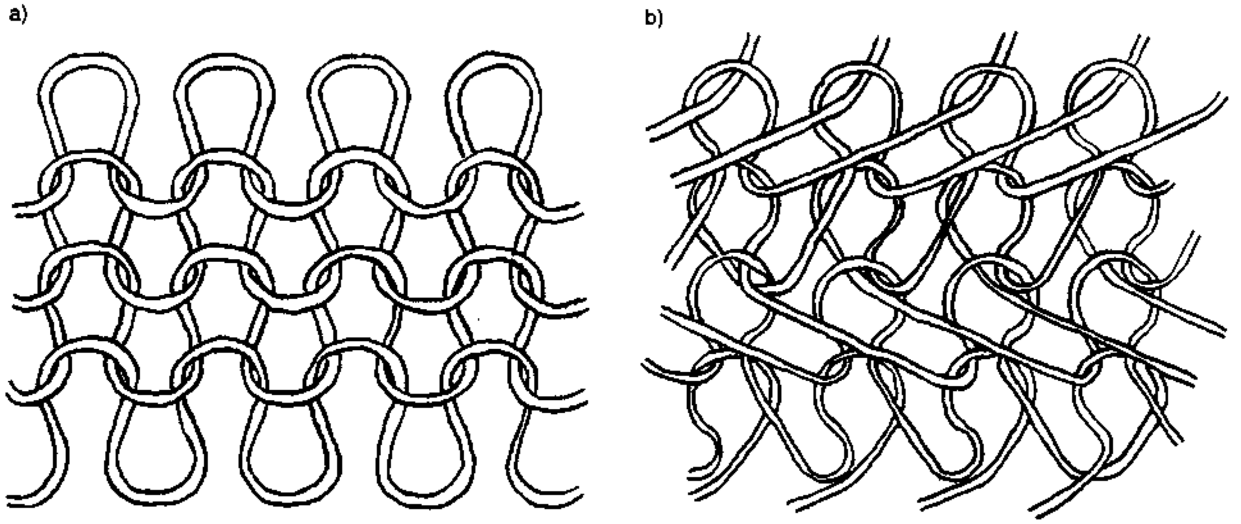

Fig. 10D Two examples of knit fabrics made by interlocking continuous strands of yarn: a) a plain knit made on a weft or filler knitting machine. The path of each crosswise yarn is called a course. b) a single-warp tricot knit.

vertically interlocked with the preceding row. With a sufficient number of loops, the yarn becomes a fabric. Knitted fabrics have the advantage of stretchability, a property not possessed by woven fabrics. Stretching can be in any direction even if the yarn used has little elasticity. Fig. 10D illustrates two types of knitted fabric. Mechanized production knitting utilizes a series of needles commonly operated by cams.

There are two basic types of knitting, weft or filler knitting and warp knitting. Weft knitting is somewhat more common. In weft knitting, the courses (crosswise rows of loops) are composed of continuous yarns. Weft knitting can be done by hand or machine but production weft knitting is a machine operation. The individual yarn is fed to one or more needles at a time. In warp knitting, the wales (predominantly vertical columns of loops) are continuous.[3] Separate yarns are fed to each needle. The warp knitting operation is always produced by machine.

Knitted fabrics can be either flat or tubular in form. Warp knits are usually flat; weft or filling knits are most often tubular.[1]

Two types of hooked needles are used in production knitting machines, the bearded or spring needle and the latch needle. They are illustrated in Fig. 10D-1. With both designs, the needles draw new loops through the previous loops that they have retained. Once the needle head and new loop have gone through the old loop, the old loop is cast off. The latch needle is most often used. It operates more automatically than the bearded needle which requires other machine elements to present the loop

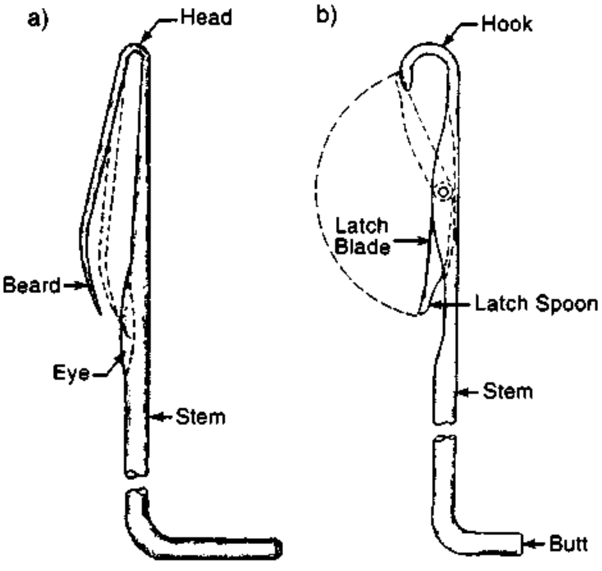

Fig. 10D-1 Production knitting needles. a) the bearded spring needle used for fine knitted fabrics and b) the more common latch needle.

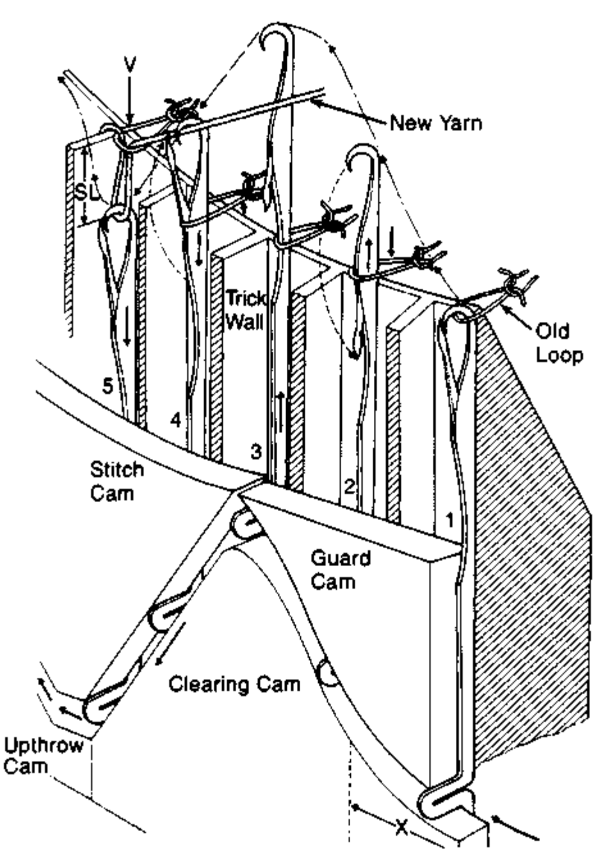

Fig. 10D1 Stitch formation in weft knitting with latch needles in a circular machine. *(from Knitting Technology by David J. Spencer. Reprinted by permission of Elsevier Science.)*

and close the hook. Fig. 10D1 illustrates stitch formation with a latched needle in a circular machine.

D1. ***weft or filling knitting*** - can be produced on either flat or circular knitting machines. In weft knitting, one continuous yarn runs crosswise in the fabric and makes up all the loops in one course. The needles either act in succession or the yarn is fed in succession, so that loop formation and interlocking is not simultaneous. Fig. 10D, view (a), illustrates a basic weft knit jersey cloth. Fig. 10D1 illustrates weft knitting with latch needles and shows that the multiple, evenly-spaced, needles have hooks with latches at the end. The needles are moved upward or downward by cams. As each needle rises, the needle hook loops over the yarn which it hooks on the down stroke, and the yarn is held in place by the needle latch. At the bottom of the needle stroke, a previous loop slips off the needle, and the new loop is held in place with the latch. On the next cycle, the loop is released from the latch as the needle rises, another loop is formed and the process is repeated.[3] Fig. 10D1-1 shows six stages of weft knitting with bearded needles.

Several different stitches can be formed in weft knitting. In the *knit* stitch, the loop is drawn from the back and passed through the front of the preceding loop to the front of the cloth. In the *purl* stitch, the loop is drawn from the front through the back of the preceding loop to the back of the cloth. In the *miss* stitch, no loop is formed. In the *tuck* stitch, two courses on one wale are looped over a third. The stitches, and various combinations of them, make all the patterns of knit and double knit cloth. Distinct patterns can be made from combinations of the knit and purl stitches since the knit tends to advance and the purl to recede.[1] Double knits are made by machine only, using two yarns and two sets of needles. These knits use a variation of the rib and interlock stitches, drawing loops from both directions.[1] Jersey is a common knitted cloth, made from only knit or only purl stitches.

Circular weft knitting machines are used to make hosiery, underwear and simulated furs. They can knit shaped garments. Jacquard effects are possible, and are now generally controlled electronically. Flat knitting machines can also produce shapes by increasing or decreasing loops. Full-fashioned garments can be made on flat knitting machines.

D2. ***warp knitting*** - is usually accomplished on flat machines but can also be tubular. Warp knitting differs from weft knitting in that each needle has its own yarn. The yarns are fed from a large reel or warp beam as in weaving with a loom. The yarns, then, generally run lengthwise in the fabric. The needles all move together and form parallel rows of loops simultaneously. The loops are interlocked on a zigzag or vertical path. The yarn section is held on one end by the previous loop and at the other end by the yarn guide. The yarn is trapped within the hook of the needle as it descends. With latch needles, the hook is closed as the needle descends. This allows the previous loop to slip off the hook while a new loop is held.[3] If bearded needles are used, a yarn guide, called a *sinker*, positions the yarn across ascending needles and then retracts as the needles descend. Fig. 10D2 illustrates warp knitting.

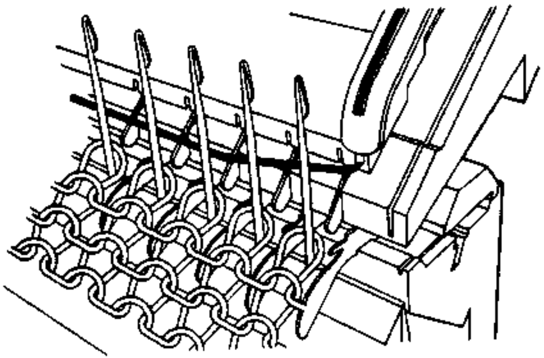

a) Laying the Thread

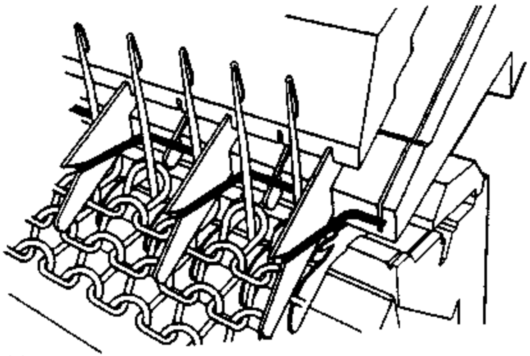

b) Sinking the Loops

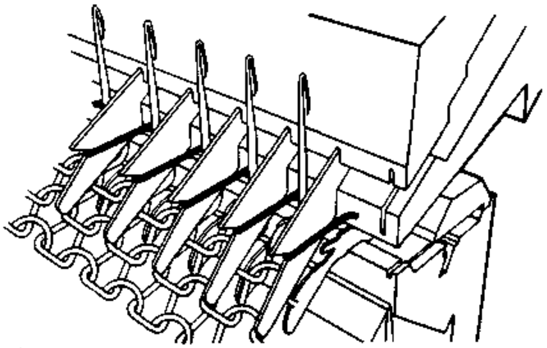

c) Dividing the Loop

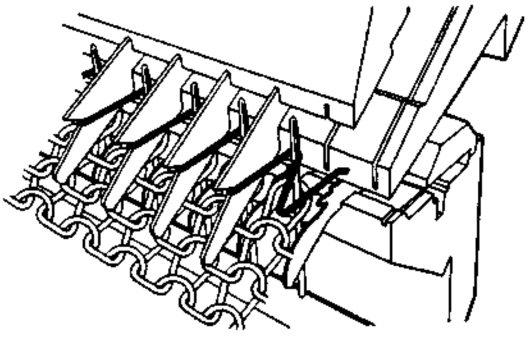

d) Pressing

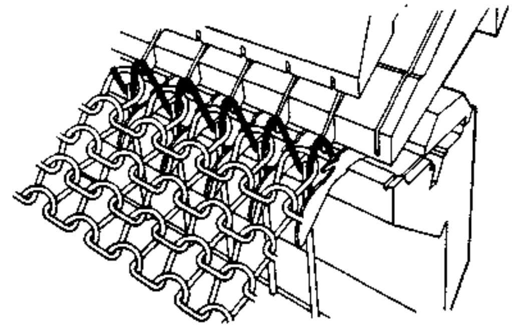

e) Landing the Loops

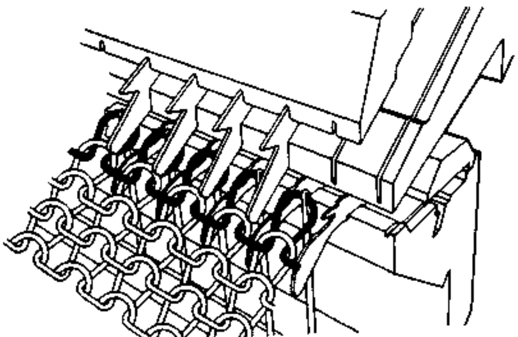

f) Knocking-Over the Loops

Fig. 10D1-1 Six stages of stitch formation in weft knitting with bearded needles. In this example, all stitches in one row are formed at the same time. *(from Knitting Technology by David J. Spencer. Reprinted by permission of Elsevier Science.)*

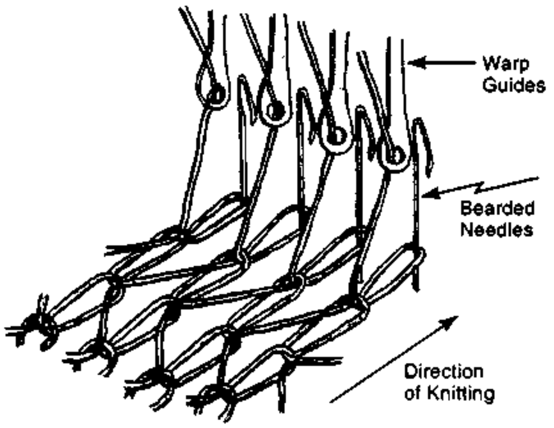

Fig. 10D2 Warp knitting with bearded needles. Loop forming is performed simultaneously with separate yarns fed through warp guides.

Warp knitting is a versatile process, but standard warp knitting machines make just three basic stitch variations: open loop, closed loop or no loop. Various fabric patterns are created from different combinations of these stitches. One simple pattern produces tricot knit, which consists of a zigzag pattern of closed loops of parallel wales. Tricot fabrics are run-resistant. Other warp-knit patterns are simplex, milanese and raschel. Milanese knitting produces run-resistant fabrics with a diagonal rib pattern. Several sets of yarn are used. The raschel knit is made with latched needles rather than the spring beard needles used for other knits. One or two sets of latch needles are used. Raschel knit fabrics are used frequently for underwear.

Warp knitting is used to produce fabric for dresses, lingerie, upholstery and draperies. among other products.

E. Non-woven Fabrics

Non-woven fabrics are fabrics made by bonding or interlocking individual, randomly oriented fibers together, rather than by interlacing continuous yarns. The fibers are held together as the result of mechanical, chemical, thermal or solvent methods or a combination of them. First, a matting of fibers is prepared, usually by taking webs of fibers after they have undergone carding and laying the webs on each other. They are laid with a parallel or crisscross pattern until a mat of sufficient thickness has accumulated. Another method uses equipment that blows loose fibers against a perforated drum. A vacuum inside the drum causes the fibers to adhere to it and the fiber deposition continues until the desired thickness is obtained. Then the mat is passed to another drum with teeth that break up the web and further randomize the direction of the fibers. The fibers are then blown onto another perforated drum. The final mat has a uniform thickness and fully random orientation of fibers. Fibers of wool have a scaley surface and have enough irregularity so that they can be compressed directly into a useful non-woven fabric. Wool felt relying on this irregularity has been made for many years. Another principal mechanical method utilizes a needle-punch machine with barbed and hooked needles that repeatedly penetrate a mat of fibers, interlocking and interlacing them. Non-woven blankets and felts of many fibers are made this way.

Chemical, thermal or solvent methods involve adhesive bonding of the fibers. In one method, thermoplastic fibers are blended with a base fiber. The melting or softening point of the thermoplastic is below that of the base fiber. The fibers are distributed to form a blanket or web that is passed through a pair of heated rollers. The heat of the rollers softens or melts the thermoplastic to the point that it flows and bonds the fibers together. Another method uses an adhesive sprayed on or applied as a foam or powder to a blanket of fibers. The adhesive can be a thermoplastic, solvent-based, or thermosetting material. Latex and acrylic-based adhesives are often used. In all these cases, heat from pressure rollers, or other sources, cures the adhesive into a solid material that holds the base fibers together.

Some non-woven fabrics are reinforced with sewing machine stitches

The wet-lay method of making non-woven fabrics utilizes modified paper-making equipment. Synthetic fibers are used alone or in combination with wood pulp. An adhesive or other binder may be included.

Non-woven fabrics are used for filters, garment lining, shoe insoles, pennants, industrial fabrics, and padding. Felt hats are made from felt made from the fur of rabbits, muskrats, beavers and nutria. Felt is used for the surface of billiard tables.

F. Finishing

Finishing processes include a variety of operations to make a textile fabric more suitable for its application. Finishing operations can be chemical, mechanical, or a combination of the two. They include treatments to improve the appearance or touch of the fabric and processes intended to improve its performance. Before finishing, woven or knit cloths are sometimes referred to as "gray goods". Companies that finish gray goods are referred to as "converters". (In the trade, dyeing and printing of fabrics are classified separately, not as finishing operations.)

F1. ***preparation***[1] - for finishing operations includes the removal of impurities from the initial fibers and irregularities, foreign matter, and defects, from the weave or knit. The objective is to produce clean and absorbent material, ready for finishing and coloring. *Burling and mending* are hand operations, primarily applicable to cloth made with natural fibers, to remove any burrs, stray yarn, knots, slubs and foreign matter. Tears, holes and broken yarns are mended.

Scouring is the removal of sizing applied to warp yarns as part of the weaving operation or any dirt, oil or lint that may have resulted from the operation. Synthetic fibers are washed with water and mild detergents. Natural fibers may require a more aggressive treatment with a strong detergent and an alkali with heat. Removal of sizing starch also requires aggressive steps. However, other special procedures are required with protein fibers (wool and silk) because of their sensitivity to alkali and strong detergents.

Mercerizing is an operation applied primarily to cotton fabrics or yarns but also to linens. It swells the fibers, shortens their length, and improves their appearance (smoothness and luster), and strength. High-quality mercerized cotton yarns have a silk-like luster. The operation also greatly improves the affinity of the fibers to dyeing. The process involves immersion of the yarn or fabric, under tension, in a cold 15 to 20 percent solution of caustic soda (NaOH) in water, followed by neutralization in an acid and thorough washing.

Drying is another preparatory operation, performed to remove excess accumulated moisture in the fabric from previous operations. Centrifuge and vacuum-chamber methods are used as an initial drying step, followed by running the fabric through a heated drying oven and then over a series of heated cylinders.

Bleaching before dyeing is also considered a preparatory operation. (See F2 below)

Singeing (gassing) - burns off any fuzz, yarn ends or projecting fibers from a yarn or fabric and makes its surface smoother. The process is performed extensively on cotton and frequently on rayon, but not on wool, silk or synthetic fibers. The yarn or fabric is passed rapidly through a gas flame or over a heated copper plate. By limiting the time of contact with the heat source, only extraneous fibers are singed. However, the operation is usually followed by a wetting step to extinguish any smoldering. If sizing precedes singeing, cotton cloth, after singeing, is run through an enzyme solution, squeezed, and allowed to stand for a period to digest and drain sizing starch.

F2. ***bleaching*** - whitens the fabric by removing the natural colors of the fibers and any stains from previous operations. The process used varies with the fibers involved but is usually a chemical process involving oxidation. Reduction using hydrogenation is the other common process. A treatment with heated hydrogen peroxide is usually used on cotton and other cellulose fibers. Cotton fabrics are often scoured and bleached in sequence in the same operation. A typical sequence for cotton involves putting the material through a steam chamber to remove sizing, washing it and impregnating it with a mild caustic soda solution, and then holding it in a "J-box" container for a period of an hour or more. The material is then washed and impregnated with a 2 percent hydrogen peroxide solution and put into another J-box for another hour. After washing, the cotton is fully bleached.[4]

Sulfur dioxide is the usual bleaching agent for wool and other animal fibers. The process involves prolonged boiling under pressure with a mild solution of caustic soda, soap and sodium silicate. The fibers are then washed with cold water, scoured and neutralized, washed again and pulled into a 2 percent sodium hypochlorite solution and into a J-box for a period. Finally, they are run through a weak sulfur dioxide solution, washed and dried.[4]

Synthetic fibers may be treated either by oxidation or reduction, depending on the material involved. They require less preparation than natural fibers but are not as easy to bleach. Sodium chlorite is used on nylons and chlorine or peroxide on polyesters and acrylics.

Sunlight has been used for many years as a bleaching agent for linens. Hydrogen peroxide treatment often follows the sunlight treatment.

F3. *finishing to improve appearance*

F3a. ***napping*** - is a brushing process that lifts the loose, short fibers, primarily from the weft yarns, into a down or nap. (The process is different from pile weaving which produces loops during weaving to provide a third dimension to the fabric. In napping, the raised fibers are only a surface effect.) Napped cloths have a warmer feel. The operation is performed by passing the fabric over rollers covered with fine wires. The wires lift the short fibers to the surface. The process is applicable to woven or knitted fabrics of spun yarns including wool, cotton, silk and rayon. Suede cloth, flannelette and wool flannel are napped fabrics.

F3b. ***shearing*** - is performed with rotary cutters, to trim a raised nap to a uniform height. It is also carried out on pile fabrics, often by a machine with spiral blades mounted on a cylinder. Automatic brushing follows shearing to remove the sheared ends of the fibers and yarns.

F3c. ***brushing***[1] - can be used to raise a nap on woven and knitted fabrics. It also is used to remove loose fibers and short fiber ends from smooth fabrics. Another use is the removal of cut fibers after shearing. The operation is carried out with bristle-covered cylindrical rollers which rotate and advance across the fabric.

F3d. ***beetling*** - involves the beating of dampened linen or cotton fabric with wooden mallets as the fabric is tightly wrapped over steel cylinders. The operation is automatic and produces a fabric with a permanently harder, flatter, highly lustrous surface and less porous weave. It makes cotton fabrics more linen-like and is used on table linens but not on linens used for garments.

F3e. ***decating*** - involves the application of heat and pressure to the surface of wool and other fabrics to set the nap, even the grain, develop luster and provide a softer hand. In the wet decating method, the material is tightly wrapped on a perforated roller and immersed in a trough of hot water. In dry decating, steam is used instead of hot water. Decating is used to improve the luster and color of rayon fabric and to make color unevenness, where it exists, more uniform.

F3f. ***calendering*** - is another process that applies heat and pressure to smooth the surface of a fabric, making it flatter and more glossy. Calendering is carried out as a final finishing step, especially when a flat, smooth surface is desired. The fabric is passed between two or more heated rollers. The degree of heat and pressure controls the amount of luster developed. Calenders may have as many a seven rollers, four of steel and three of a non-metallic material. The steel rollers are heated by steam or a gas flame. Fabric moves through the rollers at about 450 ft (135 m) per minute with a pressing force normally of 40 to 60 tons but occasionally as much as 100 tons. Sometimes, one of the steel rollers with a polished surface is geared to rotate with a higher surface speed than that of the fabric so that a burnishing action supplements the pressing. Such calenders are called *friction calenders.* The effects of calendering are normally not permanent. The process is applied to cottons, silks, rayons and synthetic fabrics. The operation is called *pressing* when applied to wool.

F3g. ***creping*** - Crepe is a fabric with a finely ridged or crinkled surface. The crepe effect is most permanently produced by weaving with hard twisted yarns but can also be produced in a fabric by causing it to shrink in certain areas but not in others. The process uses caustic soda (NaOH) applied by roller in a particular pattern. The areas treated with the caustic soda shrink; the other areas pucker. Another method uses a resist such as wax to block the contact of caustic soda in certain areas when the fabric is immersed in a caustic soda solution. Several different patterns of crepe can be produced, depending on the pattern of application of the caustic soda. When silk is creped, sulfuric acid is used instead of caustic soda. After a few minutes, the acid is rinsed off and the silk is neutralized with a weak alkali. The crepe effect can be produced temporarily by passing the fabric through a pair of rollers that have a pattern of indentations in their surfaces. Steam is applied during the rolling and the rollers are heated. After passing through the rollers, the fabric has the crepe pattern of the rollers formed in it. With synthetic fabrics made from thermoplastics (e.g., nylon, acrylics, polyethylene and polypropylene), the creping effect produced by heated, patterned rollers is permanent.

F3h. ***embossing*** - is essentially the same as the embossing operation applied to plastic or metal sheets. The fabric is run between a pair of matched, heated rollers that each have a design on their surface. Where the design is raised on one roller, it is recessed in the mating location of the opposing roller. The design is thus pressed into the fabric as a raised design. If the fabric is made with thermoplastic fibers, and the rollers are at the right temperature, the design will be permanently embossed. (The redult is the same as that with the creping operation described above, but with a different

Next Page

pattern.) If the fibers are not thermoplastic, the design can be made permanent if the fabric is treated before the operation with a thermoplastic resin. The decorative effects can be produced on plain fabrics to simulate the appearance of fabrics with woven decorations.[4]

F3i. ***optical brightening***[1] - is effected by a dyeing process. Optical brighteners (optical bleaches) are dyes that contain colorless fluorescent materials. These change the way that the dyed fabric reflects light by reflecting more blue light, giving the fabric a brighter appearance.

F3j. ***tentering*** - is a process that can be carried out at various stages of finishing but is commonly a final operation. The fabric, usually wet from some other operation, enters a frame and conveyor mechanism where it is gripped at its selvages (edges). The grippers are on moving chains and the entire fabric is eventually held in the machine. As the chain conveyor moves, the fabric is subjected to dry heat from a blast of air. At the same time, grippers gradually move outward to a specified setting. The fabric is thus brought back to its original width. Devices on the machine ensure that the weft and warp yarns of the fabric remain square to one another.[4]

F3k. ***crabbing*** - is a process for wool that has an objective similar to that of tentering. The crabbing process differs for wool in that the fabric is fed over hot rollers, then into cold water and then to a pressing station. The fabric is stretched or loosened as necessary to restore the proper width and relationship of the weft and warp yarns. The process helps prevent the development of uneven shrinkage or creases in subsequent operations.

F3l. ***flocking***[6] - is the deposition of short fibers onto an adhesive-coated surface. One method of applying flocking is to fling fiber dust mechanically onto an adhesive surface that is made to vibrate. Electrostatic charges may be applied to the fibers to align them and attract them to the electrically grounded substrate. Another method feeds the fibers into a pneumatic tube and to a nozzle from which they are sprayed onto the substrate. This method also uses electrostatic charges on the flock to aid in their alignment and attraction to the substrate. Nylon, rayon, cotton and polyester fibers are used with lengths up to about 1/8 in (3 mm). Flocking provides a soft, pleasant, fabric-like feel to solid objects and less-soft fabrics. Automobile interiors and toys are two notable applications. Carpeting is also sometimes flocked. See Fig. 10F6f.

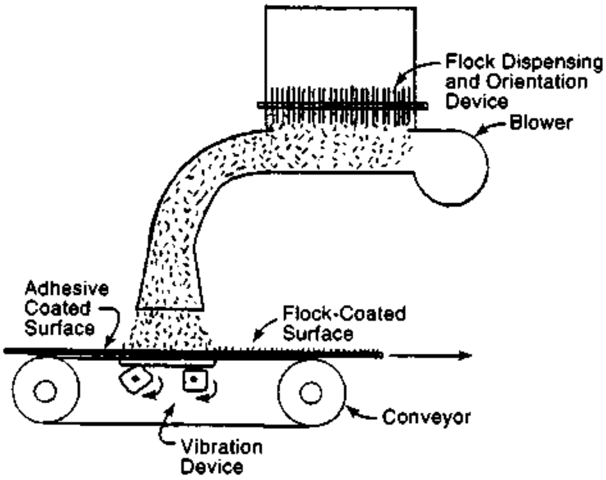

Fig. 10F6f Flocking of a sheet or fabric with a mechanical system. When three-dimensional objects are flocked, an electrostatic charge may be added to the flocking material and the workpiece may be electrically grounded to aid in the attraction and orientation of the flocking material.

F4. *finishing to improve feel (tactile properties) of the fabric*

F4a. ***sizing (stiffening)*** - Starch, gelatin, clay, glue or casein are often applied to cotton yarn and cotton cloth. The yarn or fabric is immersed in a starch solution and then dried. The starch forms a film around the yarns or individual fibers and adds weight, stiffness, smoothness and luster to the fabric. It fills the openings between yarns in the fabric. The finish is not permanent. Some cotton garments are given a starch treatment to help in keeping their appearance and feel fresh until they are sold.

F4b. ***weighting*** - is a process for adding weight and body to a fabric to improve its drape and hand. With silk, its weight can be increased by treating the fabric with tin salts. The salts permeate the yarns and become a part of the fabric, adding weight to it. The results are not permanent but the process can be repeated. Wool and napped cotton

Previous Page

can be weighted by adding flocks, extremely short fibers, to the fabric. The flocks are driven into the fabric by air pressure.

F4c. ***fulling, (felting or milling)***[1] - is a process applied to wool fabrics to increase their thickness and compactness. The wool is heated, moistened and subjected to friction under pressure until a shrinkage of 10 to 25 percent takes place. Shrinkage is in both directions and the finished fabric is smooth and resembles felt because of its tight compaction. Sometimes, chemicals are added to aid in bonding the fibers together.

F4d. ***softening***[1] - Sulfonated oils, sulfated tallow, glycerine, dextrin or sulfated alcohols are applied to fabrics to make them softer with a more desirable feel and, often, more absorbent.

F5. ***finishing to improve performance*** - includes various finishes to make the finished fabric more usable, easier to maintain and more resistant to adverse environmental conditions.

F5a. ***anti-shrinkage treatment*** - Several techniques are used, depending on the fabric involved.

Wools are stabilized with a number of methods. With the London shrinking method, the fabric is held between wet blankets for about 20 hours. The moisture in the blankets penetrates into the wool fibers and they shrink. The fabric is then slowly dried and subjected to high pressure which stabilizes it. Another method involves chlorination. The wool is treated with a dilute solution of sodium or calcium hypochlorite. This causes some fusion within the yarn which inhibits shrinkage. The process is used in woolen socks, sweaters and underwear. Another technique is to coat the yarns with a thermosetting plastic resin. When the resin is cured, it tends to prevent the fibers from shrinking.

Cotton is treated by pre-shrinking the fabric after weaving. The process is also called relaxation or compression shrinkage. The cotton is moistened by spraying with water and then pressed against heated rollers that are coated with a thick layer of felt or rubber. In sophisticated systems, the cotton cloth is first tested for its natural shrinkage; production quantities are then shrunk to that degree. The cloth is moistened with water and live steam and held firmly against a wool blanket that is under controlled tension. The tension of the blanket and of the cotton cloth is relaxed to the desired measurements. The cotton is then run over a heated drum to dry it.

Rayon fabrics are also stabilized by a resin treatment that locks the fibers together. Another rayon treatment is to induce cross linking of the rayon molecules by acetal chemical treatment. Polyester and nylon fabrics are stabilized by heat setting the finished fabric.

F5b. ***durable press (permanent press) (wash and wear)*** - The processes used involve plastic resin impregnation of the fabric either before or after it is made into a garment. Melamine or epoxy are commonly used plastics. The plastic resin, in liquid form, impregnates the fabric, which is then dried. The finished garment is pressed and then heated further to fully cure the resin. Successful treatment makes the garment crease and wrinkle resistant and provides smooth seams, shape and pleat retention even after the garment is washed and tumble dried repeatedly. Garments woven with thermoplastic yarns, in whole or in part, have heat setting characteristics from the thermoplastic (nylon, acrylic, polyester). When these yarns are pressed and heated in the desired shape, they can retain the shape through repeated launderings.

F5c. ***antistatic treatment***[1] - is applicable to fabrics made from synthetic fibers such as, nylon, acrylic or polyester. The main effect of static electricity on garments made from these fibers is a tendency to cling. The treatment involves coating the fibers with an anti-static agent that conducts away any electrostatic charges that might occur. Several commercial antistatic agents are available.

F5d. ***treatment for soil and stain release properties*** - consist of applying a coating of fluorocarbon plastic to the yarn fibers. The procedure is similar to that used to apply plastic resins to fabrics in a permanent press treatment. The fluorocarbon plastic coating is slippery and stains and soils do not adhere to nor impregnate the fibers. The treatment of upholstery fabric for protection against soiling is a common application.

F5e. ***water repelling and water proofing treatments*** - are achieved by coating the fabric with waxes, varnishes or enamels, bituminous coatings, metallic salts or silicones. Heat treatment with special quaternary ammonium compounds produces water repellency that withstands normal cleaning processes.[7] Whether the fabric is water repellent or waterproof depends on both the amount of coating applied and the nature of the coating. The heavier the coating, the more the drape and hand of the fabric will be adversely affected, but the longer the fabric will shed water. Water repellent fabrics, however, will eventually allow rain or other water to penetrate if the exposure is long and severe enough. Waterproofing involves a full coating of material so that there are no openings between the woven yarns and protection against rain or water flow will last indefinitely. Vinyl plastic and rubber (both natural and synthetic) are materials used for such coatings. Firemen's raincoats are examples of protective garments receiving this treatment. With water-repellent coatings, garments are still porous to air flow and are therefore more comfortable to wear in most conditions than waterproof garments. They also have a more normal appearance and drape. Silicone compounds are used for many water repelling applications. Another approach is to weave the fabric with 100% synthetic yarn of a material that is, itself, water repellent. Nylon and polyester are two examples.

F5f. ***other treatments*** - to provide antibacterial and antifungal properties, flame retardance, anti-moth protection, and slip resistance can all be provided. The yarn, fabric, or the completed product, is coated with or immersed in the appropriate treatment solution. The solution is usually absorbed in the fibers and gives the product the necessary property. However, some of these treatments provide only temporary protection and some may have an adverse effect on the strength or drape properties of the fabric. Fire-retardant treatments often involve immersion in a chemical or mixture containing phosphorus, nitrogen, antimony, chlorine or bromine.[3] Cellulose fibers can be given a temporary flame-retardant treatment with ammonium salts or borax and boric acid.[7] They also can be mildew-proofed with a number of compounds including acrylonitrile, salicylanilide, organic mercury compounds and chlorinated phenols.[7]

G. Coloring

The natural color of textile fibers is only infrequently acceptable as a color for the finished textile product. Coloring the fabric with one solid color or with a decorative pattern is the norm. Dyeing and printing are the basic processes used to impart desired colors to a textile product. Both dyes and pigments are used.

G1. ***dyeing*** - involves the immersion of the fiber, yarn, cloth or finished product in a solution, usually aqueous, containing the dye. (Most fabrics can be dyed at any stage, but manufacturers generally prefer to dye as late as possible in the manufacturing sequence to minimize the risk of being overstocked with the wrong color material.) The dye saturates the fibers and is fixed by heating, aging or steaming the fabric. The dyeing operation may be performed on either a batch or continuous basis. Washing of the fabric normally follows dyeing to remove loose dye materials. Some fibers receive preparatory operations before dyeing.

Not all dyes are suitable for all fabrics. Successful dyeing requires that the dye be compatible with the fiber to be colored. It also must be suitable for the particular application. Color fastness varies with the environment that the fabric will face. Fastness to light is important in some applications, for example, in draperies or curtains. Color fastness in laundering is necessary for clothing or napkins which frequently become soiled. The earliest dyes came from natural sources, plants or minerals. Present-day dyes more often are synthetic, being derived from coal tar or petrochemicals. Other chemicals in addition to the dye itself are usually part of the dying process. They promote penetration and uniformity of distribution of the dye. There are a number of dyeing methods: stock dyeing (dyeing loose fibers in a vat), top dyeing, yarn dyeing, piece dyeing (dyeing after weaving or knitting), cross dyeing and solution pigmenting or dope dyeing. The different dye types currently in use include: acid, mordant, sulfur, azoic, vat, disperse, substantive and reactive dyes. Combinations of dyes may be used to get proper color effects or if several kinds of fibers are included in the material. Heating is a common part of most dyeing processes to aid in the transfer of the dye molecules to the fiber and to make the fiber more receptive to the dye. When the dyeing equipment is built to permit pressurized dyeing, temperatures as high as 265°F (130°C) may be used.[1] The dye bath is often agitated to help ensure that all portions of the material are contacted by the dye. Sometimes, hydrocarbons rather than water are used as the carrier of the dye. They have the advantages of faster wetting of the fiber and lower dyeing and drying temperatures.

Dyeing equipment is normally fabricated from stainless steel because dye solutions are often acidic. The equipment consists of a vessel to hold the dye liquid and the material, a means for agitating or circulating the liquid or moving the material and heating and cooling capability. In batch dyeing processes, the material to be dyed is often held in perforated containers through which the dye liquid circulates.

G1a. s***tock dyeing***[4] - is the dyeing of unspun fibers in a batch operation. A large vat is filled with loose fibers and the heated liquid dye is circulated through the mass at a high rate in order to contact all the fibers as thoroughly as possible. Even though the fibers absorb the dye thoroughly there may be some fibers with only partial penetration of dye. Nevertheless, after blending and spinning, a high quality of dyeing results and the resulting yarn has a uniform color. The operation is commonly applied to wool.

G1b. ***top dyeing***[4] - is the dyeing of the rope-like gathering of wool fibers that result from the combing operation. The rope or "top" is wound on a perforated drum and the dye is circulated through the drum holes into the rope. This method produces highly uniform dyeing.

G1c. ***yarn dyeing***[4] - is dyeing done after the fiber has been spun into yarn. It is sometimes referred to as *skein dyeing* when the yarn is coiled in a skein or on a reel. The skein or reel is immersed in the dye bath. It is left there long enough for the dye to thoroughly penetrate the fibers of the yarn. When yarn is wound on a reel, the central spindle may be perforated and the dye liquid is pumped through the holes into the yarn. Yarn is dyed as a yarn instead of a fabric (*piece dyeing*) so that it can be woven with other yarns of different colors. Plaids, checks, and stripes can be woven this way.

G1d. ***piece dyeing***[4] - is the dyeing of a woven or knitted fabric. This is the most common dyeing method, because, when the dyeing is deferred to a later stage in manufacturing, there is less chance for the manufacturer to be burdened with material of the wrong color when customer preferences change. Piece dyeing is performed on either a batch or continuous basis. The continuous basis is used when the quantities are large. Rolls of cloth are fed into the dye bath and rerolled after dyeing. Smaller quantities, and particularly wool fabrics, are dyed on a batch basis on perforated rolls. The operation, when performed under pressure, allows higher temperatures to be used and this shortens the dyeing cycle.

G1e. ***cross dyeing***[4] - is a combination process. Stock or yarn dyeing first takes place for some of the yarns that are used to make a fabric. The fabric is then woven with the desired pattern using both dyed and undyed yarns. After weaving, the fabric is piece dyed. The previously gray yarn in the fabric is given a new color and the previously colored yarns may be changed somewhat in shade but will blend with those that are newly dyed.

Some fabrics, woven of two different fibers, can be cross dyed in a bath that contains two dyes, one with affinity for each fiber. Fabrics containing both viscose and acetate rayons have been dyed this way. Special color effects can be produced.

Another approach, when the fabric has yarns of different fibers, is to use two separate dye baths, each one with affinity for one of the yarns.

G1f. ***solution pigmenting (dope dyeing)***[4] - is applicable to synthetic fibers extruded from spinneret dies. The dyeing or coloring is achieved by mixing a pigment or other colorant in the fiber material before it is extruded. This is the same method used to color non-textile thermoplastic extrusions. The method is applicable to fiber made from solid thermoplastics (nylon, acrylic, polyester, polypropylene and polyethylene) and to viscose rayon and acetate. (For rayon and acetate fibers, the materials are wood fiber or cellulose solutions rather than solid thermoplastics.) The color extends throughout the fiber and color fastness is excellent.

G2. ***printing*** - is involved when a fabric is decorated with a pattern of color or colors. It differs from dyeing in that the entire fabric is not made into the same color. Printing is very common in producing decorative fabrics used for clothing, furniture, draperies, carpets, tablecloths and other applications where some kind of decoration is wanted. A variety of methods are used, depending on the amount of fabric to be printed and the pattern wanted. The principal printing methods are: 1) block or relief printing, 2) intaglio printing, sometimes called engraved, roller or gravure printing, 3) duplex printing, 4) discharge printing, 5) heat-transfer printing, 6) screen or stencil printing, 7) resist printing, 8) warp printing, and 9) pigment printing.

The printing ink is usually applied from a thickened paste of dye or pigment. After printing, the fabric is dried to retain the sharp image through further handling. The application of steam heats the ink and causes it to migrate deeper into the fabric while the thickening agent prevents it from spreading. Most important, the ink is set or fixed, usually by the heat, and excess ink may be removed by washing the fabric. The final step is drying the fabric.

G2a. ***block printing*** - is relief printing (See 9D1) applied to textiles. Traditionally, it has been done by hand with wooden blocks carved to put a design in relief. The block, coated with an ink or dye is pressed against the cloth. This step is often repeated in different places on the cloth to produce a design or pattern. Applications are made with different carved blocks and different colors, depending on the pattern and colors wanted. The method now is limited to hand-crafted products. Relief printing with equipment similar to that used with paper is the current production outgrowth of block printing. This relief printing may also be referred to as surface, block, or kiss printing.

G2b. ***engraved printing (intaglio printing)*** - The intaglio printing process, gravure or rotogravure, described in sections 9D3, 9D3a and 9D3b, is also utilized for high-production printing of fabrics and is the most common production printing method for fabrics. When fabrics are printed , the impression roller, the roller that provides backup pressure for the fabric, is covered with a thick, resilient blanket or an endless such blanket that passes against its surface. Another endless cloth, called the backing fabric or *back gray* passes between the blanket and the fabric to be printed. The purpose of the backing fabric is to absorb any excess printing ink and protect the blanket from staining. The fabric to be printed, in web form, passes between the back gray and the printing cylinder. If multiple colors are to be printed, there may be several cylinders, one for each color, all of which bear against one large impression cylinder. This approach is illustrated in Fig. 9D7, view b, and is also known as *roller printing*. After printing, the web of fabric passes through a drying and steaming oven to fix the color. In high-production printing situations, the back gray and blanket webs are automatically cleaned of any excess ink that they absorb.

G2b1. ***duplex printing*** - is roller printing performed on both sides of a fabric. Separate printing and impression rollers are used, one on each side of the fabric. Care is taken to align the printing on both sides. The fabric, then, appears the same as one in which the colors are woven-in rather than printed.

G2c. ***discharge printing*** - is a process in which the cloth is first dyed with some background color. This color is then selectively discharged or removed in some areas with a printing process that applies chemical reagents or reducing agents in paste form. The printed area then becomes white or some other color, depending on the chemical agent and other colorants in the paste. Caustic soda or sodium hydrosulfate are typical reagents. Steaming and washing follow to remove the reagents.[4]

G2d. ***heat-transfer printing*** - is very similar to transfer coating (hot transfer coating) of plastics parts described in 4M2a except that only dyes and no plastic film is transferred to the work. The method was first used with polyester fabrics. The desired pattern is first printed on paper in one or more colors with thermoplastic dyes that are compatible with the fabric. Then the fabric and paper are run together through heated rollers with the printed side of the paper facing the fabric. The heat softens the dyes and transfers them to the fabric. Detailed patterns, including halftone pictures can be printed on fabrics with this method.

G2e. ***stencil and screen printing*** - are explained in sections 8I6, 8I7b and 9D4a, 9D4b respectively, but are both used for decorating fabrics as well as for printing on paper and on other surfaces. Screen printing is the more common method. With either process, the cloth to be printed is normally laid flat on a work table and held by clamping, pinning, or some other method while the image is applied. Separate screens or stencils are used for each color. A common manual screen printing application is the decoration of T-shirts. However, for large scale printing of fabric in web form, automatic screen-printing equipment is available. This equipment advances the web of fabric, positions the screen, dispenses ink to the screen, moves the squeegee to apply the ink and lifts the screen to allow the fabric to move to the next position. Screen printing is sometimes carried out with a rotating cylindrical screen that contacts a web of fabric as the fabric passes against it. This method is sometimes referred to as rotary screen printing. The operation is economical for printing large quantities of fabric.

G2f. ***resist printing*** - The fabric is first printed with a paste material, called a resist, a resinous material that blocks the fabric from accepting dye. The fabric is then dyed but the dye is absorbed only in the resist-free areas. The resist material is then removed chemically, leaving the fabric colored in the selected pattern. A manual variation of resist printing has been used for years in Indonesia and other southeast Asian countries to make *batik fabric.* A design is hand painted on fabric with paraffin wax or beeswax. The fabric is then dyed; the dye penetrates only those areas that are not wax coated. The wax is then removed by heat or solvent, leaving dyed and un-dyed areas on the fabric. The process must be repeated for each color.

G2g. ***warp printing*** - is printing, usually by roller printing methods, on the warp yarns before they are woven into a cloth. Weft yarns that are finer than normal are then used in weaving the fabric. The effect is a soft or shadowy presentation of the pattern on the finished fabric. This approach is sometimes used on cretonnes and other upholstery and drapery fabrics.

G2h. ***pigment printing*** - uses an insoluble pigment instead of a thickened dye. The pigment is mixed with a plastic binder that holds the pigment in place on the fabric after printing. The plastic resin is cured through the application of dry heat. Washing is not required after printing. The process is widely used. However, the fabric may have a harsh feel and the printing may eventually wear away from use of the printed goods.[3]

H. Manufacture of Clothing and Other Sewn Products ("Needle Trades")

Clothing is the largest category of sewn textile products, but footwear, leather products, upholstery, curtains and draperies, towels, bedding, flags, parachutes, table linens, tents, industrial filters, and other industrial components made of fabric all require the same basic sequence of operations when produced in quantity. These products rely on stitching as the predominant means of fastening pieces together to make the finished product. Not only cloth, but leather and plastic sheeting may be used as base materials. Rug manufacture, described below, also usually involves some sewing operations. Although garments and other sewn products are still made by tailors, seamstresses and other skilled persons who each make the entire product, production processes for these products involve a division of labor. The work consists of a series of operations, each performed by a separate person, using production-type equipment. Individual workpieces or bundles of them are moved by conveyors, chutes or other means from operation to operation. The following are the operations involved for most sewn products.

H1. ***spreading/stacking*** - In production operations, the individual pieces making up the items to be sewn are not cut individually from the fabric but are cut from a stack of many layers of fabric. All layers of the stack are cut at the same time. The stack is made by spreading layers of the fabric on a work surface. Short stacks may be spread by hand, but, if production quantities are involved, the fabric is spread from a wheeled carrier, a spreading machine. The machine carries a bolt or bolts of cloth and spreads one layer after another smoothly on the stack as the machine moves back and forth along the work bench. For uniformity of the pieces that will be cut from the stack later, it is important that the layers do not have either too much or too little tension.

Spreading machines can be primarily manual in operation, semi-automatic or fully automatic. Fully automatic machines traverse under their own power. Electronic sensors are sometimes used to superimpose each layer precisely on the stack, particularly when there is a pattern to the fabric that has a relationship to the pieces to be cut. To control tension, many spreading machines are designed with devices that unroll the bolt of cloth as the carrier moves, so that the cloth is unwound at the same speed as the carrier moves.

There are several ways in which the fabric can be placed in the stack. Often, when both surfaces of the fabric are the same, or when cut pieces can be symmetrical, the machine folds the fabric face-to-face at the ends of the stack and spreads the fabric when moving in either direction. When the fabric cannot be spread face-to-face, the machine, equipped with a turntable for the bolt of cloth, rotates the turntable at the end of each layer (after the fabric is cut), and deposits the new layer with the same face up. Fabrics with decorations, patterns or nap that must always face the same direction are spread only when the machine is going one direction. Some products require the fabric to be spread face-to-face but only in one direction. In either case, the fabric is cut at the end of the stack and the carrier or machine returns to the starting point without spreading. However, some machines have a double-deck feature so that one-way, face-to-face stacking can take from separate bolts of cloth as the carrier moves in either direction. Layers are spread alternately from each bolt. Sometimes, double-deck machines are used to spread an outer fabric and a lining alternately from the same spreading machine. After cutting, the outer fabric and lining are handled together.

In most spreading, the alignment of the layers is controlled at one of the edges, but often, when there is variation in the fabric width, the layers are aligned at the center.

H2. ***marking*** - The *marker* is an arrangement of outlines of all the individual pieces of the garment or other product to be sewn. Its purpose is to provide a guide for cutting pieces of the proper size and shape from a stack of fabric. The marking operation involves the arrangement of these patterns for individual pieces in such a way as to minimize the wastage of material between pieces. The marker may be printed or traced on a sheet of paper, a layer of inexpensive fabric, or a layer of the fabric to be cut. Making a good marker manually to maximize the yield of the material is a time consuming process and requires considerable skill. Traditionally, markers have been made by tracing full-size cardboard or fiberboard patterns on a sheet of paper that is the same width and length as the spread fabric for a production lot of the product. The marker is fastened to the stack of fabric by staples, double sided sticky tape, or by an adhesive. It then serves as a guide for the manual cutting of the individual pieces from the stack. The marker may also be developed first in miniature with accurately scaled-down patterns and then printed enlarged on the marker sheet. Perforation of the pattern outlines on the paper is sometimes used instead of ink printing. Then the perforated sheet serves as a stencil for marking the top layer of fabric. Chalk or other powder is dusted through the stencil perforations. The stencil thus produced can be used on subsequent lots of the same product.

Fig. 10H2 illustrates a typical marker, this one for several sizes of overcoat.

In well-equipped production facilities, marker preparation is now done by computer. This saves time and optimizes utilization of the fabric. The computer equipment then prints a full-scale copy of the marker on paper. When computer-controlled cutting equipment is used, a separate marker sheet is not required. The marker pattern is contained in the computer's memory instead of on a sheet of paper.

H3. ***cutting (chopping or knifing)*** - Two basic approaches are used in cutting the stack of fabric into pieces of suitable size and shape to be sewn into finished products. *Pattern chopping* is the cutting of the fabric into the exact shape required for sewing. *Block chopping* is a kind of rough cut that produces pieces close to the final shape, but which require some trimming cuts to bring them to the exact shape needed. Several methods are available to cut the stack of spread fabric into pieces. The methods available include several with manually-controlled cutters (rotary blade machines, reciprocating blade machines, and continuous band knives, similar to band saws in principle). Whether circular or straight, the knife blades may have straight, wave-like, or saw-tooth edges, depending

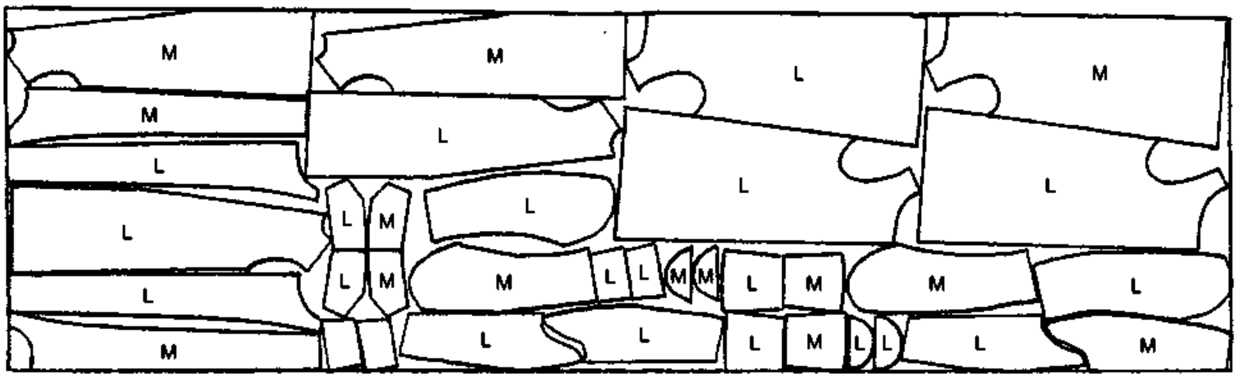

Fig. 10H2 A marker for production of overcoats of two different sizes, medium (M) and large (L).

on the material to be cut. More automatic methods include clicker die press systems and computer-controlled laser cutting equipment.

Round knife (rotary blade) and *oscillating knife* (reciprocating blade) machines are manually operated but have electric power to provide the blade motion. The cutter operator guides the knife by hand through the stack of cloth as it cuts, following the pattern lines on the marker. The result is a stack of cut pieces all the same shape and size, often with a paper piece from the marker at the top of the stack.

When a *continuous blade* (band knife) machine is used, it follows block chopping by a manual cutting machine. The block-chopped stack of pieces is brought to a nearby, more-or-less stationary, continuous blade machine to be trimmed to the precise dimensions and shape required. The stack is manually guided against the blade. (The band knife can be made narrower than a reciprocating blade and thus can cut sharper corners. When the shape of the pieces to be cut includes intricate curves and sharp corners, band knife cutting is most suitable.)

Press cutting uses metal dies (clicker or steel-rule dies) made to the shape of the pieces to be cut. The stack of material to be cut is moved to the press bed, the die is positioned on the stack and the press ram descends, forcing the die through the stack. The sharp edge of the die cuts the pieces from each layer of the stack in one press stroke. A special die is used for each piece to be cut. Steel rule die cutting is described in paragraph 2C4a of this handbook. The cost of making, handling and storing the dies limits this method to large-scale production of pieces of a certain shape and size. Parts for footwear, purses and similar items are cut with this method.

Computer controlled cutting - Three computer-controlled cutting methods are available for cutting fabric pieces. They are the vertical-blade, water-jet and laser-beam machine methods. All three methods provide cutting without the need for a paper or other separate marker sheet. The pattern of cutting is controlled by data in the computer's memory. Vertical-blade computerized cutting uses a cutting head that contains a reciprocating knife blade. The head is positioned by an X-Y mechanism and the blade penetrates the stack and cuts along the perimeter of each piece to be cut. The machine uses a vacuum table to hold the stack for cutting. A plastic film at the top of the fabric stack maintains the vacuum. The water jet method also cuts a stack of fabric, using an extremely fine, extremely high-speed jet of water. The method, which is used for other machining and cut out work, is described in paragraph M, Chapter. 3, of this handbook. Computer-controlled laser cutters operate in the same manner as laser cutting in the metalworking industries. (See Chapter. 3, paragraph O.) The laser beam traces the outline of the pieces to be cut and burns or vaporizes the fabric to separate the pieces wanted.

These computer-controlled cutting processes are fast and accurate, eliminating variations inherent in manual methods. Another advantage is that no investment is required in physical patterns or cutting dies. All the information needed to cut the pieces for a particular product, is contained in the computer data storage system. Laser cutting is particularly useful for lower quantity production including one-of-a-kind products.

Stacks of cut sections of the product may be drilled or notched to guide the subsequent sewing operations. There are two drilling methods: awl needle drilling and hypodermic drilling. *Awl drilling* (needle drilling) uses a solid tool that rotates as it is pressed into the stack of fabric. The awl may have elements that cut a hole in the fabric stack or may simply penetrate the stack spreading or severing the yarn. The purpose of *hypodermic drilling* is to leave a mark on the fabric rather than a small hole. The needle is hollow and, as it is withdrawn after penetrating the stack of fabric, it leaves a dye mark on the fabric. The dye is either a fluorescent type that is not visible in normal light but is detectable under ultraviolet light or an ink that is visible in normal light but disappears when the sewn fabric is pressed.

Tickets are affixed to each stack to identify lay and lot numbers and ensure that each final product is made from correctly matching material.

H4. ***sewing*** - The basic sewing operation in the production of garments and other textile products is the manually controlled sewing machine. "Its function is to form a chain of interlocking loops (or links) of thread around small sections of fabric." [10] The sewing machine makes each stitch and moves the fabric into position for the next stitch in the series. Industrial machines are all powered by electric motors and some reach speeds as high as 8000 stitches per minute. World-wide, there are thousands of different models of machine, many made for special purposes, such as overedging, embroidery, chain stitching, continuous seaming, and blind-stitching, as well as for certain operations such as pocket sewing, button and button-hole sewing. However, almost all have the common characteristic of relying on a human operator to obtain and position the fabric pieces, direct their movement through the sewing head, control the starting, the speed and stopping of the stitching, the movement aside of the sewn component, and the replenishment of thread. From this highly manual system, there has been an evolutionary movement towards more and more automatic operation of portions of sewing operations and also of complete operations. Most progress has been made with those operations that are more highly repetitive. The simplest automation is in machines that perform an automatic sewing cycle on fabric pieces that are manually placed in position and manually set aside after the operation. Examples are button or buttonhole sewing, bar tacking, dart sewing and pocket sewing. These machines are sometimes referred to as *stop motion machines.*[10] Next on the degree of sophistication are semiautomatic machines that perform such operations and move the sewn assembly aside afterwards. The most sophisticated machines are those that take fabric pieces from a hopper or magazine, place them in the sewing machine, perform the operations automatically, and set the assembly aside. The operator's duties are to load the hoppers and monitor the machine operation. More recently-developed machines perform these operations under computer control and can sew with variations of size and shape as dictated by the program.

Attachments for sewing machines improve the quality and add to the productivity of certain operations. The attachments usually consist of fixtures and guides to direct the fabric to the correct position and mechanisms to perform certain other tasks. They are frequently used in production sewing. Examples include hemming fixtures, seam guides, needle positioners (which control the height of the needle when the machine stops), stitching templates, thread trimmers, knives, positioners, pipers, gatherers, binders, rufflers and shirrers and devices called stackers that remove and set aside the sewn pieces. They may do this by sliding, lifting, or inverting the piece.[1] Other devices move the fabric automatically to the correct position for sewing and to a new position after the first sewing operation is completed.

Some of the operations performed by semiautomatic and more fully automatic machines are the following: buttonholing, button sewing with or without automatic feeding of the buttons, tacking, welting, dart stitching, contour or profile sewing in which curved seams are sewn automatically, and pocket setting. Backtracking and angular profiles can be sewn automatically on some machines. Sometimes, two or more sewing machines are arranged in series so that the first machine performs a sewing operation and the material is moved automatically to the second machine for another sewing operation. For products such as sheets, pillowcases and table cloths, hemming may be performed on both edges of fabric fed to two machines from rolls, and it passes through the machines for continuous sewing and cutting off. Buttonholing and button sewing machines may be made to repeat these operations at prescribed spacing on a garment. These machines are programmable so that the number of buttons and their spacing. can be changed when different garments or different sizes are sewn.

The sewing machine is a complex mechanical device that performs many functions with respect to the thread and the fabric, each at a precise instant in the sewing cycle. Each machine includes devices to maintain tension in the thread most of the time and other devices to put slack in the thread when it is needed, machine components to move the fabric between stitches and other elements to hold the fabric motionless when necessary. The sewing machine needle is precisely shaped with a hole near the point to carry the thread and a groove to contain the thread when the needle passes through the fabric. The shuttle used in some stitches must oscillate or rotate but is not solidly connected to any shafts because the thread must pass around it. Surfaces of all thread handling elements of the machine must be very smooth so as not to catch the thread during its movement.

There are two basic sewing machine stitches: *chain stitches*, which are made with one thread, fed from the top, that interlocks with itself and *lock stitches*, which use one thread fed from the top and another in a bobbin in the machine to interlace with the top thread.

Chain stitches are made by a hook-like element called a looper that is beneath the bed of the sewing machine. When a sewing needle and thread penetrate the fabric and start an upward return stroke, there is a small amount of slack in the thread. The looper catches the slack loop and moves it to a position where the next needle stroke passes through it. As this operation continues, a series or chain of stitches is formed, all with the same thread. Chain stitches are simpler and faster to sew than lock stitches and have more stretchability but have the possibility of unraveling if the thread breaks and one of the thread ends is pulled in a certain way. Fig. 10H4(a) shows a simple chain stitch.

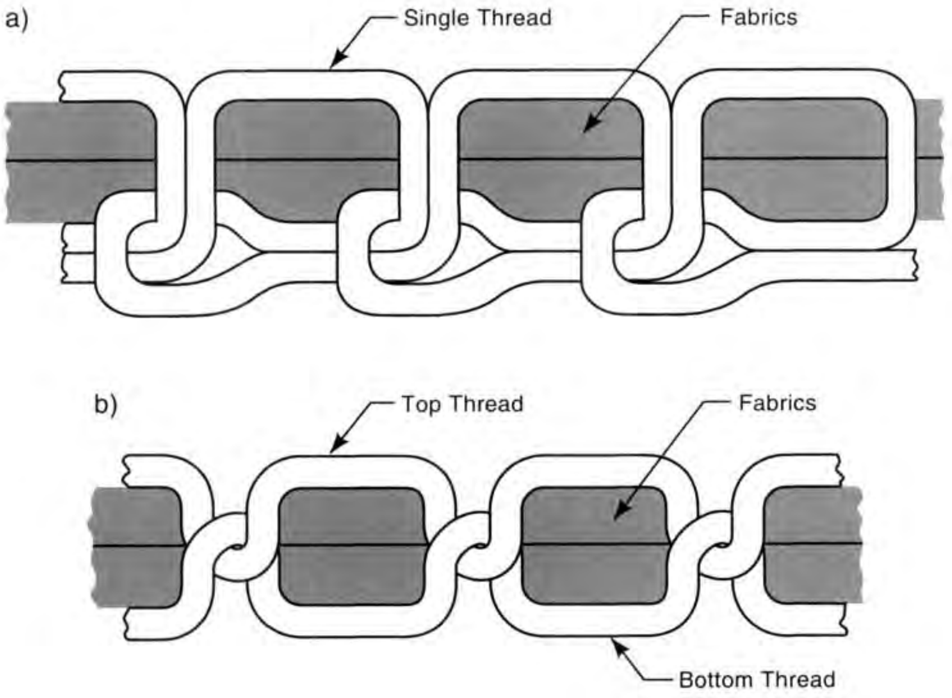

Fig. 10H4 Two common simple stitches: a) Chain stitch. One thread interlocks itself at the bottom of the fabrics being sewn. b) Lock stitch. The top thread interlocks the bottom thread. (Note: Stitches are shown very open to clearly illustrate how the threads interlock.)

With lock stitches, a moving hook in the machine bed catches the slack in the needle thread, just as a looper does, but moves it so that the shuttle, which carries a bobbin of thread, passes through the thread loop. This produces a bottom thread, below the surface of the fabric, that interlocks with the needle thread from the top of the fabric. Fig. 10H4(b) shows a simple lock stitch. Lock stitches essentially remain in place even if the thread should break.

H4a. ***stitch-less joining (seam bonding) (heat sealing)*** - Some fabrics are joined without using sewn stitches. Instead, the separate pieces are bonded together along a seam. Two basic methods are used: fabrics are either fused together, or held by an adhesive that is added. In fusing, the fabric itself is made wholly or partly from thermoplastic synthetic yarn or is coated, at least in the seam area, with a thermoplastic. Heat and pressure are applied sufficiently along the seam from a wheel or die so that the fibers soften and the fabrics fuse together. Heating for stitch-less joining can be by direct contact, infra red radiation, or high-frequency induction. Most machines used for this operation are equipped with a pair of rotating wheels that apply pressure and usually heat to the fabric as it passes between them. The machines operate like sewing machines in that the joining is along a narrow seam.

When an adhesive is added to the fabric for the joining operation, if it is a hot melt adhesive, heat and pressure are applied to soften the adhesive and cause the fabric layers to bond. Other adhesives may be cured with ultraviolet energy, evaporation, or polymerization, often with less intensive heating.

These stitch-less seams are used in garments, footwear and other products, particularly when plastic film is used instead of, or is laminated with, a woven or knitted fabric.

H5. ***pressing*** - provides smooth surfaces, pleats, creases, and other effects with a combination of heat and pressure on the sewn product. Contoured shapes may also be made by pressing, often in areas of garments and footwear. Manual ironing is one method of pressing, using irons like household irons, sometimes supplemented with devices to aid in handling the iron. *Mangles* are also often used. (Mangles are machines with a pair of heated rollers. The cloth or garment is pressed by passing it between the rollers.) For higher levels of production, presses are used. With all these methods, there is normally a timed cycle during which the pressure and heat penetrate and act on the fabric. A *buck press* is a machine with matched, somewhat contoured sections, between which the fabric product is placed. Steam provides both heat and moisture to the fabric being pressed. *Blocking* is forming on a one-piece die with pressure applied to the fabric with hand tools or steam. Heat is applied by steam, gas, or electrical resistance. Moisture may also be added and a vacuums may be used to hold the fabric against the contours of the die. The contoured sections are made for a specific portion of the garment or other product. Surface texture as well as shape can be changed by pressing operations. Hats, collars, and cuffs can be formed on presses with matched dies. *Curing* consists of heating a sewn component or product in an oven. The prime application is the setting of previously pressed creases in durable press, permanent press or wash and wear garments.[1] Steam chambers are sometimes used to remove wrinkles or creases from fabrics.

H6. ***folding, labeling, wrapping/packing*** - The completion of garments and other sewn textile products includes, in the final phases, these operations that allow the products to be labeled, inventoried and protected, so they can be handled, shipped and presented to customers with proper identification and attractive appearance. Folding prior to packaging is normally a manual operation but, in quantity production, is facilitated by equipment that holds the product and simplifies folding. A variety of boxes and cartons are available, depending on the product. Most of the boxes are shipped to the sewing factory in folded, flat form. Plastic bags, sealed, stapled or taped, are increasingly common to protect finished products until they are sold. Vacuum packaging is increasingly common and is often highly mechanized in machines that reduce moisture in each product by passing it through a heated chamber, encase it in plastic bags, apply a vacuum to remove air from the bag, make a compact package and then seal the bag. Product labels are included inside the bag or adhered to its outer surface.

I. Rug and Carpet Making

(The terms rug and carpet will be used interchangeably in this book. However, rugs often mean floor coverings that do not cover the whole floor and are usually not fastened to the floor; carpets are usually coverings of the entire floor of rooms and may be fastened to the floor.) Handmade rugs are still produced in many parts of the world. There are two prime classifications of handmade rugs: flat-woven and knotted-pile. Knotted-pile rugs are made by fastening pile tufts to an open-weave backing fabric. Short pieces of yarn are wrapped or tied around tight warp threads. The loose ends of the knots form the pile of the rug. Manufactured rugs may be woven, tufted, or knitted. Weaving is the slowest and most expensive production method of rug making; tufting and needlepunching are the least expensive and quickest. The pile of pile rugs may be in loop form or cut or there may be a combination of cut and uncut pile. The yarn of cut pile may be twisted or not-twisted; not-twisted pile provides a softer plush texture. Cut pile of varying heights give a "carved" or sculptured effect. Flat rugs have no pile and can often be used with either side up.

Wool is the major traditional carpet material but nylon, acrylics, polyester, and polypropylene are now widely used. Cotton and rayon are also used, especially for scatter rugs, bath mats and automobile carpets.[5] Backing fabrics are woven from cotton, jute, and hemp, among other fibers. Many rugs are coated on the bottom surface with a non-slip plastic or latex binder or a layer of foam rubber or plastic.

I1. ***weaving rugs and carpets*** - Notable machine-woven carpets are the Axminster, Wilton, Brussels, chenille and velvet.

Axminster carpets have a pile yarn that is inserted mechanically during weaving and bound but not knotted. The looms used require great skill and extensive time for setting up, but production is quick once the set up is complete. Colored yarns for weft strands are fitted into spools and put in an overhead storage unit. Axminster weaving is very versatile and a wide variety of patterns and colors is produced. The pile is normally made from loosely twisted yarn because the weave is not tight, simulating hand-knotted carpet The pile in Axminster carpets is almost always cut.

Wilton carpets are made on special Jacquard looms. A series of perforated cards controls the feeding of yarns which are incorporated as piles into the carpet surface. The surface yarns are held in reels referred to as *frames*. The yarn in each frame is wound on spools and is all of the same color. Piles are made by looping the desired yarn (color) for a particular location on the carpet over a wire. With single-frame Wilton, pile yarns run lengthwise, in the direction of the warp yarns and the wires run crosswise. Each wire has a very sharp knife at its end. After the yarn is looped over the wire, the wire is withdrawn and the knife cuts the loop, creating a cut pile. However, pile loops of Wilton carpets are not necessarily cut. Colors not wanted on the surface of the carpet are woven so as to be below the surface. The yarns not on the surface add resiliency and body to the carpet. The Jacquard equipment enables accurate production of intricate color patterns. Wilton carpets can be of high quality. The best Wilton carpets are those made with more frames (more colors) and a high density of tufts per unit of area.

Brussels carpets are similar to Wilton except that the wire used to make the surface loops are not equipped for cutting. The loops are left as the wires are withdrawn. Jacquard looms are used.

Chenille carpets are woven in two separate loom operations. In the first operation, cotton warp threads are used and the weft yarn is the kind wanted for the carpet surface. It may be either hard- or soft-twisted. The woven fabric is fed to a machine that cuts it into strips. The strips are held together by the cotton warp yarn and are pressed into a V-shaped cross section. The ends are fastened together, forming a long fuzzy yarn with an appearance similar to that of a caterpillar's body. This fuzzy yarn is then used as the filler yarn in a second weaving operation, producing a carpet with a pile that can be quite deep and soft, if desired, when the fuzzy strips are made wide with a soft yarn. Chenille carpets may be expensive but can be of high quality.

Velvet carpet uses the simplest weaving method. The pile for velvet carpets is made by looping the yarn that forms the pile over wire strips. These are removed as each row of loops is completed, and a sharp blade at the end of each wire cuts the loops into piles as the wire is withdrawn. Only one yarn is used and, if a pattern or design is wanted in the carpet, it is achieved by printing after weaving. Velvet carpets are inexpensive. They can be made on ordinary looms.[4] Many different surface sculptured effects can be achieved by varying the cutting of the pile.

Much carpeting with cut pile is now woven in the same manner as other pile fabrics. Two carpets are woven at the same time, face to face with a small spacing, and the pile comes from yarns that extend into, and are woven into, both fabrics. When these yarns are cut, two cut pile carpets result.

Broadloom rugs are woven on looms that are wide enough to weave the rugs to the desired width in one piece.[4]

I2. ***tufting rugs*** - is a very common manufacturing method for pile rugs. 90% of American-made carpeting is tufted. The first step is the weaving of a fabric backing or the use of a non-woven fabric as a backing. Traditionally, backings have been woven of jute, kraft-paper cord, or cotton. More recently, woven or non-woven polypropylene has been used. Polyurethane foam may be bonded to the backing. The backing fabric is passed through a tufting machine that inserts the tufting yarns into the fabric by punching it with thousands of tufting needles. The needles are similar to sewing machine needles in that each has an eye to carry the yarn through the fabric. Each needle has its own yarn supply. Pulling the yarn through the fabric and withdrawing slightly creates a small loop of yarn on the opposite side of the backing fabric. (which will become the upper, visible surface of the carpet). A looper (hook) engages this yarn loop to hold the yarn when the needle withdraws. There is a looper for each needle. As the needles repeat the punching they leave loops (tufts) of pile yarn on what will be the top side of the backing fabric, and a stitch of yarn on the underside. The tufts are then fixed in place by coating the backing fabric and the stitch with latex. Often, another layer of fabric (usually jute) is also added, along with more latex, and a foam rubber or vinyl backing. This layer adds stiffness, dimensional stability, and, with the foam backing, some cushioning to the carpet. The tufts may be cut during tufting for some styles of carpet, but shearing after tufting and backing gives a very smooth surface to the carpet. Fig. 10I2a illustrates the tufting of loop pile. Fig. 10I2b illustrates tufting of cut pile.

Tufted rugs and carpets are customarily made in 12 ft (3.6m) or 15 ft (4.5 m) widths. The patterns of tufts can take many forms of both color and texture. Bas relief patterns are commonly incorporated. The tufted loops can be left as loops, partially cut ("cut and loop") or fully sheared (plush). Shearing is common with fully-cut carpets; otherwise, cut piles from opposite sides of the loopers will have slightly different heights.

I3. ***making knitted rugs*** - Knitted rugs are made with special machines that have three sets of knitting needles. The face, backing and pile yarns are all knitted together at one time, with a method similar to that of hand knitting. The backing is then given additional body with a coating of latex. Frequently, a second backing is added for additional stiffness and dimensional stability. The pile loops may be cut but uncut loops are more common. Multiple color patterns can be knitted with these machines.

I4. ***making needlepunch carpets*** - These carpets are unwoven except for a pre-woven fabric core. A face of unwoven fibers is fastened to that core. The face is formed by punching many barbed needles through the core and a blanket or web of unwoven fibers. The needle punching permanently fastens the blanket fibers and woven core together. The surface has no pile, but the carpet is dense, thick and heavy. It can be printed with different designs and colors. A rubber cushion backing may also be fastened. When needlepunch carpet is made from polypropylene fiber, it can be used for outdoor applications. Major uses are in the kitchen, the bathroom and on patios.

I5. ***making hooked rugs*** - Hooked rugs are hand made by cutting and twisting outworn woolen or cotton cloth or other rags into thin strips and pulling them, with metal hooks, through a woven backing cloth. The backing cloth is woven from burlap, cotton or linen. The strips are pulled to form slightly raised loops and they may then be sewn together. The method permits the inclusion of colorful patterns and pictorial decorations in the rugs. Hooked rugs are used as throw mats in smaller areas of houses.

I6. ***making braided rugs*** - Colorful strips of outworn piece goods are braided together and wound

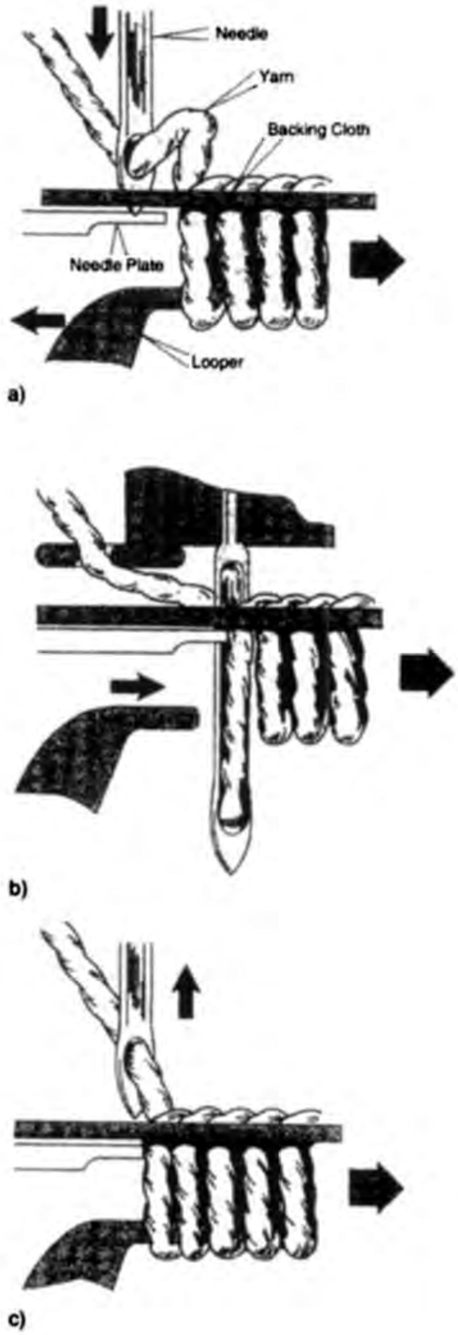

Fig. 1012a Tufting rugs with loop pile. Note that the operation is done with the carpet upside down. In view a), the needle descends through the backing cloth as the looper moves out of the way. When the needle has fully penetrated the yarn, the looper advances (view b) and catches the yarn, forming a loop as the needle withdraws out of the cloth (view c). (*Courtesy Cobble Tufting Machine Co.*)

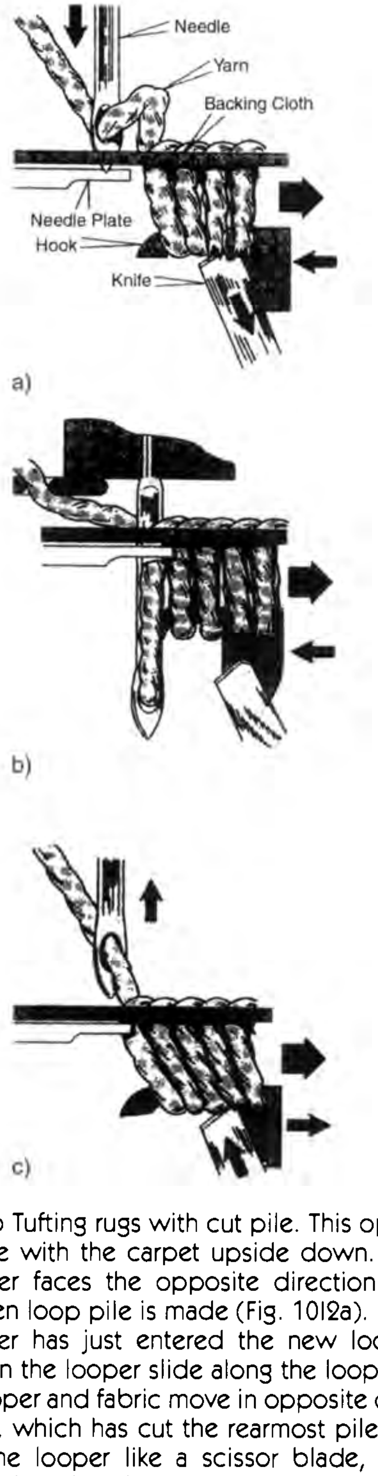

Fig. 1012b Tufting rugs with cut pile. This operation is also done with the carpet upside down. Note that the looper faces the opposite direction than that used when loop pile is made (Fig. 1012a). In view a), the looper has just entered the new loop. Loops already on the looper slide along the looper's length as the looper and fabric move in opposite directions. The knife, which has cut the rearmost pile by acting against the looper like a scissor blade, is moving downward. In b), the looper is picking up a new loop and the needle is about to withdraw upward. In c), the needle is moving upward, the looper is moving backward and the knife is moving upward to cut another loop. (*Courtesy Cobble Tufting Machine Co.*)

in concentric flat spiral ovals or circles. The ovals are stitched together.

I7. ***making oriental rugs***[9] - Traditional oriental rugs are made by hand, usually on vertical looms. Working from the bottom up, the worker weaves a backing cloth and inserts short yarns, loops them over the warp yarns, and ties them to create piles. The starting pile yarns are 2 to 3 inches (5 to 7.5 cm) in length. Special Persian or Turkish knots are used. Pile densities range from 50 to 400 per square inch (8 to 62 per sq cm). The more dense arrangements are more valuable. After the piles are completely inserted, they are sheared, and the warp threads at the ends are tied into fringes. Wool yarns are the principal pile material, although goat or camel hair and some silk may also be used. The backing is woven from cotton or sometimes from wool yarns. Pile yarns are dyed with dyes made from natural sources—flowers, roots and insects.

I8. ***making needlepoint rugs*** - is another hand-made approach. Each intersection of a woven canvas backing cloth is covered with individual stitches of wool yarn.

References

1. *The New Encyclopedia Britannica,* 15th edition, 1989, vol. 21 - Industries, Textile.
2. *Materials Handbook,* 14th edition, G.S. Brady, H.R. Clauser, J.A. Vaccari, McGraw-Hill, New York, 1997, ISBN 0-07-007084-9.
3. *McGraw-Hill Encyclopedia of Science and Technology,* 8th ed., McGraw-Hill, New York, 1997.
4. *Textiles: Fiber to Fabric,* B.P. Corbman, D. Potter, McGraw-Hill, New York, 1967.
5. *Encarta Encyclopedia,* Microsoft, 2003.
6. *Plastics Engineering Handbook of the Society for the Plastics Industry,* 5th edition, Van Nostrand Reinhold, New York, 1991, ISBN 0-442-31799-9.
7. *Shreve's Chemical Process Industries,* 5th ed., G.T.Austin, McGraw-Hill, New York, 1984
8. *Knitting Technology,* David J. Spencer, Pergamon Press, Oxford, England, 1983, ISBN 0-08-024762-8.
9. *Grolier Encyclopedia,* Grolier Electronic Publishing, Inc., 2002, Danbury CT.
10. *Apparel Manufacturing Handbook,* Jacob Solinger, Van Nostrand Reinhold Co, New York, 1980, ISBN : 0-442-21904-0.

Chapter 11 - Chemical Processes

A. Batch Processes in General

In batch processing, a fixed quantity of the materials to be processed is placed in the process equipment (the reactor, still, mixer, crystallizer, or other processing device) and the operation proceeds to completion with no material being removed until all the material in the equipment (the batch) is completed. There may be a number of sequential operations, performed in several pieces of equipment, but all material in the batch is processed together and kept together until all operations are completed. Batch processing is used in research, development, and experimental work, since batches can be small and variations in conditions can be tried easily on different batches. Batch processing is also used in production when quantities are not very large or, at least, not large enough to justify the cost of developing and building continuous process equipment. Batch production is most common when specialty chemicals, pharmaceuticals, or foods are produced. In the production of many products, both the materials and the processing steps and the product made are the same from batch to batch. These batches are designated *cyclical batches*. In other cases, with *multi-grade batches*, there may be minor changes in the materials from batch to batch, but the processing conditions are identical. With still another variation, *flexible batches*, both the materials and the processing steps may vary somewhat from batch to batch[5]. For high-quantity production, as exists for commodity products, however, and compared to continuous processing, batch processing may require larger equipment and correspondingly larger amounts of work-in-process. Labor costs are usually higher, due to the handling of material and the need to set, adjust, and monitor operating parameters for each batch.

B. Continuous Processes in General

In continuous processes, raw materials are fed steadily into the processing equipment and the finished product or material continuously exits the equipment. Automatic equipment monitors and adjusts flow rates, pressures, temperatures, and other process parameters. For high-quantity production, continuous processing is far more economical, per unit of production, than batch processing. Equipment size and work-in-process quantities are both smaller for a given level of production. However, there is a development cost involved in establishing a continuous process, and an investment is required for the necessary equipment and controls. These factors demand high quantity production; otherwise, the capital costs of the process cannot be amortized. Process control of conditions must be exacting, but computer control can make this feasible.

When a process is primarily continuous, but there are some elements that occur periodically rather than continually, such as the renewal of a catalyst, or removal of some material, the process is considered to be *semibatch*.

C. Separation Processes

Separation precesses are those that change the proportions of materials in a mixture. The starting material is a solution or other homogeneous mixture, or a heterogeneous mixture such as a suspension of solids in a liquid, or a mixture of various solids. Separation processes include one or more of the following operations: distillation (various methods), absorption-stripping, extraction and leaching, expression, crystallization, precipitation, fluid-particle separation methods, various solids separation methods, adsorption and ion exchange, electrolytic processes, electro thermal processes, and drying.

C1. ***distillation*** - is a means of separating the constituents of a mixed liquid by taking advantage of their different boiling points. It is also used to separate liquids from non-volatile solids. Distillation is the most common industrial method for separating liquid mixtures. The mixture is heated to the temperature at which the most volatile component vaporizes. However, that temperature is not high enough to cause all the other liquids in the mixture to vaporize. The vapor is conducted away from the heating chamber and cooled to a low enough temperature to cause it to condense. The vapor that condenses becomes a single-liquid material provided its boiling point is sufficiently different from that of the other materials in the liquid mixture.

If the liquids to be separated have boiling temperatures that are close together, the removal procedure may require two or more stages. With such a procedure, the condensate from the first stage is heated again to the boiling point of the liquid to be removed and the process is repeated. In some cases, many stages of repeat distillation may be needed. One example is the distillation of whiskey and brandy, where the initial fermented mixture may contain only 5 or 10 percent alcohol and the final liquor is perhaps 90 proof (45% alcohol). Several stages of distillation are needed for such a separation because the boiling point of alcohol, 173°F (78°C), is quite close to the 212°F (100°C) boiling temperature of water. If the mixture contains several different components, the distillation process can be repeated at different temperatures until all desired liquids are removed. Another common application is the distillation of fresh water from sea water. This is normally a multiple stage operation. Petroleum processing involves distillation to separate various fractions including naphtha, kerosene and lubricating oil from crude oil. Petrochemicals and natural gas are commonly processed or purified by distillation.

Distillation is also used when a gas is cooled enough to assume a liquid form and then is heated or allowed to warm, to boil off constituent gases. The distillation of air is one example of this approach. It is used to separate air into nitrogen, oxygen, carbon dioxide, argon, and other minor constituents.

Batch distillation is applicable when quantities are limited, in laboratory work and in larger-quantity production when solid materials, that are difficult to handle or clean from the apparatus, are processed. Materials that yield tars, resins, and other materials that clog the equipment, also lead to batch operation. With batch distillation, a particular amount of feed liquid is charged into a distillation vessel, and sufficient heat is applied to vaporize the desired fraction from the liquid. A still may be connected into the system and reflux may be used. (Reflux is recycled distillate. See fractional distillation below.)

The more-volatile fraction removed from the original liquid is called the *distillate*. The less-volatile fraction from the bottom of the distillation column is referred to as *residue or bottoms*. Distillation equipment consists of a still (retort), the container in which the liquid is heated, a condenser to cool the vapor, causing it to become liquid, and a receiver to hold the distilled liquid (distillate). Fig. 11C1 illustrates a simple distillation arrangement.

Variations in the basic distillation process include fractional, vacuum, multiple effect, and steam distillation.

C1a. ***fractional distillation (rectification, fractionation, or enrichment)*** - is a method that gives the effect of several stages of distillation in one continuous operation. It is useful when the liquids have boiling temperatures close to each other, so that simple distillation does not produce products of satisfactory purity. The process uses a high, insulated, distillation column with a series of horizontal or almost horizontal plates or trays. There is a heat source at the bottom of the column and a cooled distillation chamber is fed from the top of the column. Hot vapor from the bottom of the column rises up the column and either passes through

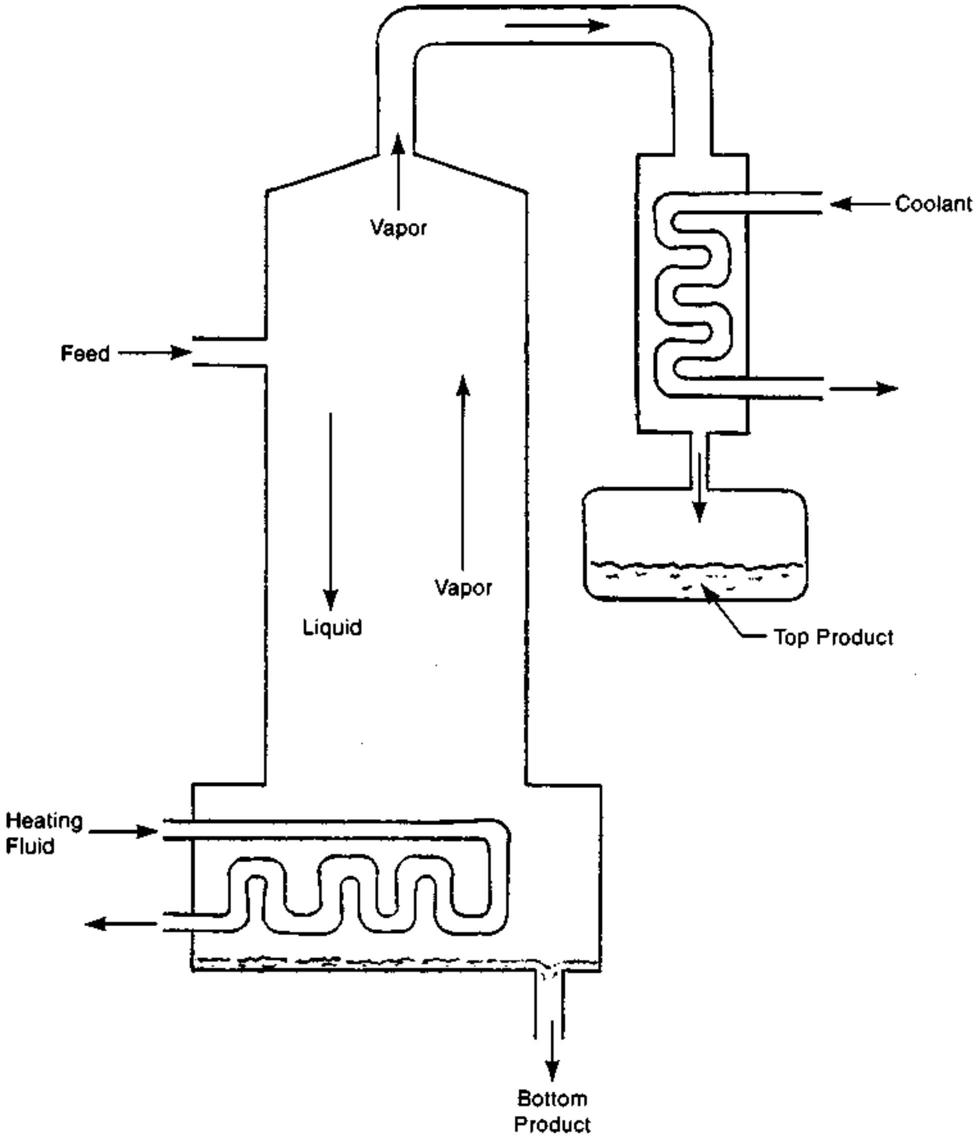

Fig. 11C1 Schematic representation of simple distillation.

perforations in the plates or zig zags past the plates, which are fastened alternatively to opposite sides of the column walls. The hot vapors partially condense on the plate surfaces. A portion of the distillate, referred to as a *reflux*, is also piped from the condenser to the top of the column. As it drips down the column from plate to plate, and as condensate on the plates drips down, it contacts the vapor which is rising in the column. There is an interaction between the liquid and the vapor. Some of the vapor condenses and some of the liquid vaporizes. As the distillate and reflux move down the column, they lose more and more of their more volatile fractions, and as the vapor rises, the cooler liquid dripping down absorbs more and more of the less volatile fractions. In the bubble tower, the most common arrangement, the plates are angled successively at opposite angles rather than being mounted horizontally so that both the liquid and the vapor pass over the full length of plate. The purified distillate, ("top product"), is collected from the condenser in a reflux accumulator and the remaining liquid ("bottom product") is collected from the reboiler at the bottom of the column. Fractional distillation can produce 95 percent alcohol (industrial grade alcohol) in one operation. The process is used for both simple and complex mixtures. Petroleum processing uses fractional distillation, and several different fractions are drawn off at different levels of the column. In the separation of isotopes, as many as 500 plates may be in the column.[1] The process is used to obtain oxygen from liquid air. Columns range from a few inches to 40 ft (12 m) in diameter and heights from 10 to 200 ft (3 to 60 m). Pressures range from a few millimeters of mercury to 3000 psi (21 MPa) and temperatures from −300 to +700°F (−180 to +370°C)[4]. In complex multiple-product columns, some feed material may enter the column at various levels and vapor of different products may be removed at several levels. Fig. 11C1a illustrates fractional distillation. Some authorities use the term *fractional distillation* to refer to any

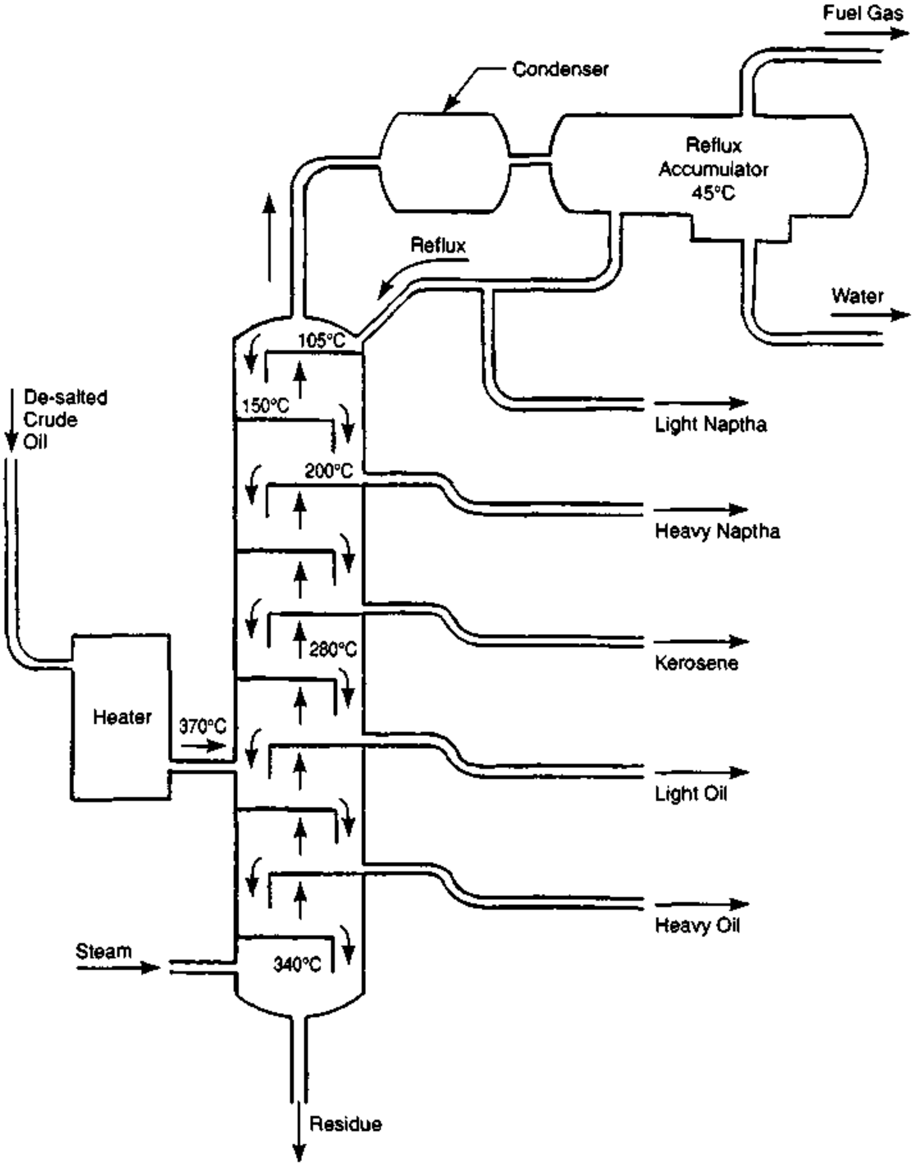

Fig. 11C1a Fractional distillation of crude oil.

process that performs the separation of several components, and *rectification* to the process with the counterflow described above.

An equivalent process is the packed column, which uses a packing of small, complex-shaped metal, glass or ceramic objects, instead of horizontal plates, to provide ample surfaces for the vapor and reflux to interact.

C1b. ***vacuum distillation*** - allows distillation to take place at temperatures below the normal boiling points of the liquids involved. A partial vacuum in the distillation chamber causes the liquid to boil at a temperature lower than it would at atmospheric pressure. The greater the vacuum, the lower the boiling point. When there is a full vacuum, the process is called *molecular distillation*. Vacuum distillation is used to purify substances that would be adversely affected by normal distillation heat, and for other substances when the distillation temperature at normal atmospheric pressure would be inconveniently high. Vitamin purification is one application. In one arrangement, the process is performed in a chamber with the material to be processed in one container that is heated. Another container is the receptacle for the vapor and is chilled. The vapor leaves the heated container and condenses in the chilled one with little loss. Vacuum distillation is common in making lubricants from petroleum.

C1c. ***flash distillation (equilibrium distillation)*** - uses relatively simple equipment illustrated schematically in Fig. 11C1c. The feed liquid, a mixture of two or more liquids, is heated and put under pressure. Then it is fed through a pressure reducing valve and into a vessel (*flash drum*) where, because of the reduced pressure, much of

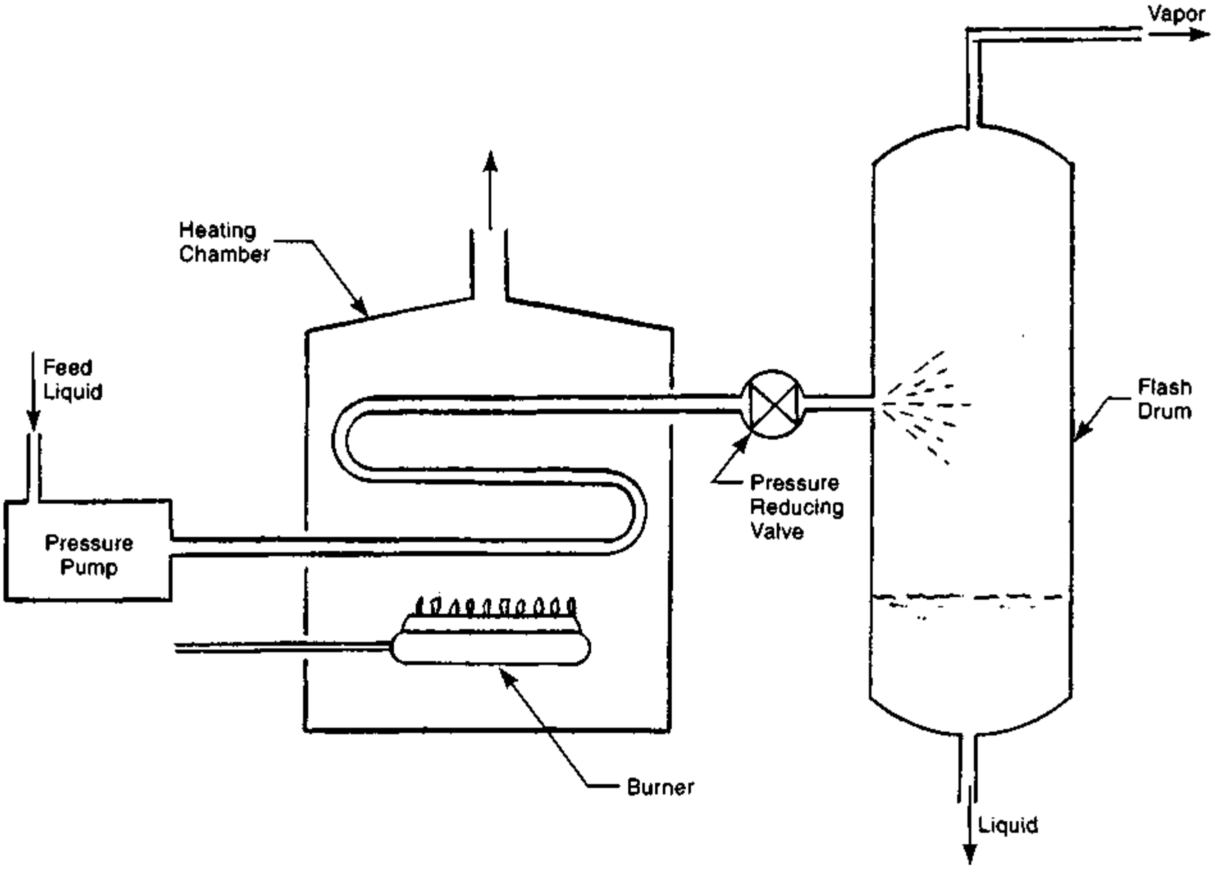

Fig. 11C1c Schematic representation of flash distillation.

the volatile fraction becomes vapor. The flash drum is large enough so that the vapor and liquid separate. The vapor and the residual liquid are then in equilibrium. Vapor is piped from the drum, usually into a condenser. Flash distillation is a common operation, used in cracking petroleum to produce gasoline, kerosene, lubricating oils and asphalt. The method is also used in the production of alcohol, the desalinization of water, and the manufacture of perfume spray.

C1d. ***multiple-effect distillation (multistage flash evaporation)*** - uses a series of vacuum chambers, each with a lower pressure than the one that precedes it. The method does not require heating, though it is used to facilitate the operation. The feed liquid passes from chamber to chamber, and vaporizes further in each. This method is used extensively for desalting water. When salt water is processed, the cooling for condensing the fresh water vapor is supplied by sea water that is thereby preheated by the process. A desalting plant for sea water may have as many as 40 stages of evaporation.

C1e. ***steam distillation*** - is another method for separating materials at a temperature below the normal boiling point of the liquid to be distilled. Steam reduces the partial vapor pressure of the liquid, enabling distillation to take place at a lower temperature. The method is used to remove essential oils from plants. The plant being processed is crushed and/or chopped to open the oil-bearing plant cells. The resulting material is mixed with water or suspended from a grid above the water. Steam is introduced to the water, causing the water to boil and the essential oils to volatilize. The water prevents the plant oils from being overheated, and aids in heat transfer. The oils are carried away by the steam vapor to a condensing chamber. The condensate is a mixture of oil and water and the two are separated easily by gravity. The method is also used to separate high-boiling-point substances from nonvolatile impurities or to remove volatile impurities from substances with still higher boiling points. The steam distillation process is limited to substances that are immiscible with water. However, it is not necessary that the diluting vapor be steam. Theoretically, any liquid that is immiscible with the product to be recovered can be used.

Cinnamon, camphor, anise, clove and peppermint oils are produced with steam distillation. Perfumes and fine organic chemicals are purified by this method.

C1f. ***sublimation*** - In sublimation, a solid material passes directly to a vapor without going through a liquid phase. Upon cooling at the same or low enough pressure, the vapor becomes a solid again without going through a liquid phase. Sublimation is favored if the pressure is low and the temperature is high. Heat must be added to the material to be sublimated to cause the phase change to take place. Sublimation is used to purify a substance or, with condensation of the vapor, to separate and save a fraction of the original material. The process is the same as distillation of a liquid except that special steps are taken to avoid clogging the equipment with solid material. Iodine, naphthalene, and sulfur are purified by sublimation. Freeze drying of food is a sublimation process. The frozen moisture in the food is removed in a high vacuum without becoming liquid.

C1g. ***destructive distillation*** - is decomposition of a material due to heat in the absence of air. In the process, the products of the decomposition are separated and collected as in regular distillation. The material to be distilled is heated, in an inert atmosphere, to a temperature high enough to cause chemical decomposition. Destructive distillation is used to make coal gas, benzene, naphthalene, phenol, coke, and various hydrocarbon materials from coal, in the cracking of crude oil to make gasoline, and for making alcohol, acetone, acetic acid, pine oil, wood tar and charcoal from wood. Oil shale is another material processed by this method to reduce the viscosity and increase the hydrogen content of the oil contained in the shale[4]. In the destructive distillation of coal, temperatures range from 930 to 1830°F (500 to 1000°C), the range depending on what products are wanted. Higher temperatures produce more gaseous products and lower temperatures more liquids. Wood is no longer destructively distilled for liquid chemicals but charcoal for metallurgical processes is made by this method[4].

C2. ***absorption-stripping*** - is a two-step process for removing a minor constituent (and sometimes more than one minor constituent) dissolved in a feed gas stream and then for recovering that constituent in a concentrated form. The purpose is either to purify the gas or to recover the minor constituent for other use. Absorption is generally used to separate materials with high boiling temperatures from gases. Two separate towers are used, as illustrated in Fig. 11C2.

The first step, *gas absorption*, is the operation that dissolves soluble components of a gas mixture in a liquid when the gas and liquid come into contact. The operation utilizes an absorption tower. The feed gas is most frequently fed into the tower from the bottom. As it ascends in the tower, the gas encounters a liquid solvent that absorbs the unwanted constituent. The liquid solvent is fed from the top

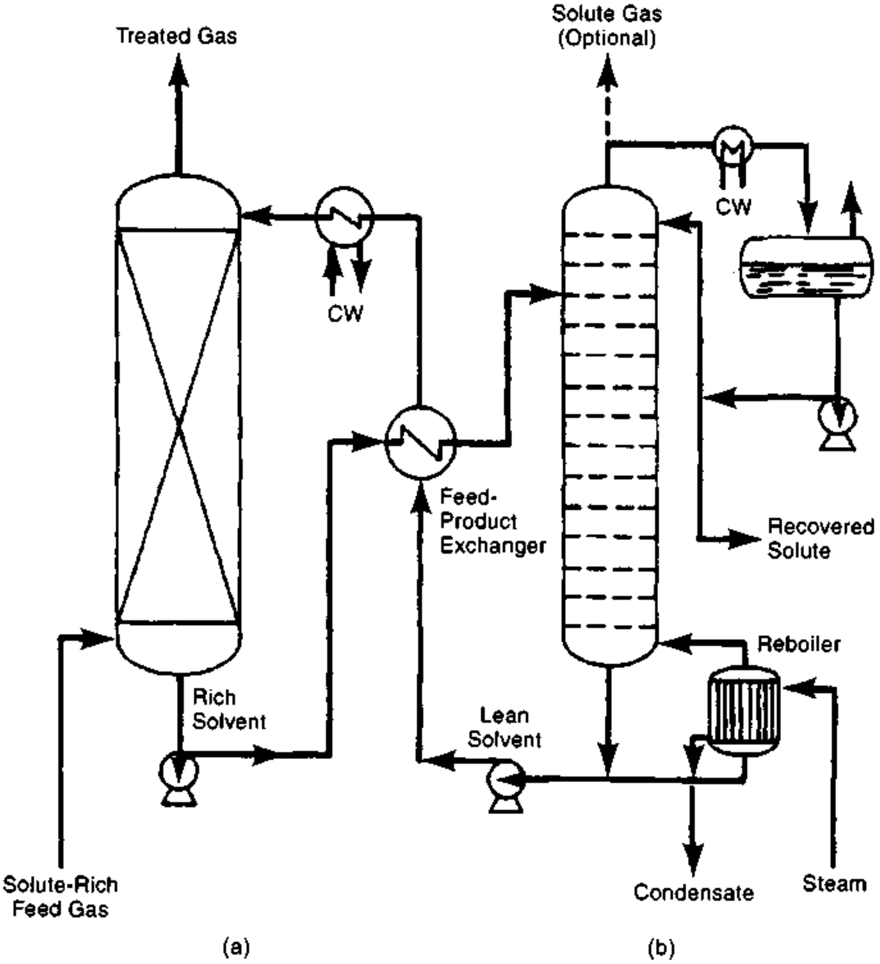

Fig. 11C2 The illustration shows the operation of an absorber-stripper. The feed gas, rich in a solute, enters the absorption tower, (a). There it contacts the solvent, which is flowing downward in the tower. Solute is transferred from the gas phase in the feed gas to the liquid phase in the solvent. This purifies the feed gas. The solvent, containing the solute, is pumped to the top of the stripping tower, (b), where it flows downward over shelves and trays attached to the walls of the tower. There, the solvent contacts a second gas that preferentially absorbs the liquid that was a solute in the feed gas, stripping the solvent of that liquid. The solvent is then recycled back to the absorption column. The solvent gas with its new gaseous solute is condensed or otherwise processed to separate it from the solute vapor. (*Reproduced with permission from Perry's Chemical Engineering Handbook, R.H. Perry and D.W. Green, McGraw-Hill, 1997.*)

and flows downward into and over a series of devices that put the feed gas and solvent in contact. (The devices may consist of a packing of irregularly shaped small plastic, ceramic or metal pieces, sprayers, or cross-flow plates or trays. They all have the function of increasing the surface area of the liquid in contact with the gas.) Contact between the gas and the liquid causes the gaseous solute to be absorbed into the solvent in liquid phase, leaving the feed gas free of solute. The treated gas leaves the absorption tower at the top; the liquid solvent, containing absorbed gas, exits from the bottom of the tower. Absorption towers are sometimes operated at pressures higher than atmospheric to increase the transfer rate and capacity of the tower. For the same reason, the operation is often carried out at a lower temperature, just above the freezing temperature of the solvent. Absorption is a common separation method in chemical manufacture, but is second in usage to fractional distillation. However, fractional distillation requires considerably more energy than gas absorption. One major application of gas absorption is the removal of carbon dioxide and hydrogen sulfide from natural gas. Another is the separation of ammonia from an air-ammonia mixture, using water as the solvent. A third is the removal of benzene, toluene, and xylenes from coke-oven by-product gases[4]. Gas absorption is also used to remove valuable components from the vapors that result from crude oil processing. The ideal solvent for absorption use has a high solubility for the gas to be absorbed and a low solubility for basic gas of the feed stream and other gases that are to be retained.

The second step, *stripping* or *desorption* or *sparging*, is the inverse of absorption. Volatile components in a liquid mixture are absorbed into a gas when the gas and liquid come into contact. The operation utilizes the second tower. The liquid solvent from the first step, containing the unwanted constituent, is pumped to a stripping tower where it flows downward over or through a series of devices that ensure contact between the liquid and another gas that has an affinity for the unwanted component and that is flowing upward in the tower. Conditions in the tower are maintained to facilitate absorption, so that the unwanted solute becomes a component of the solvent gas mixture. In many cases, the stripped solvent then is pumped to the first tower for reuse and this re-processing is one of the purposes of the operation. Some solvent may be vaporized to provide the stripping gas in the second tower. The other purpose of stripping may be to recover the minor constituent gas in a more concentrated state.

Absorption is also used for the removal of trace quantities of impurities such as xylenes from air or other gases. The operation then is called *scrubbing*. Stripping also removes volatile organic substances from water[2]. Nitrogen, steam or air are among the stripping gases used, depending on the materials involved in the process. Some systems remove multiple constituents from a gas, for example, several hydrocarbons from air. Other systems may involve chemical reactions during the gas absorption, after the solute has changed to the liquid phase, to remove the solute from the gas mixture more completely. Applications of this sequence are the removal of hydrogen sulfide from natural gas with aqueous ethanolamine, the scrubbing of gas discharges from coke ovens with dilute sulfuric acid to recover ammonia and the scrubbing of flue gases from coal-fired electrical generating stations to remove sulfur dioxide by reacting it with a solution of sodium carbonate[6].

C3. ***extraction and leaching*** - Extraction is an indirect separation process for mixed liquids that is sometimes used when distillation or evaporation is not feasible due to a narrow difference of boiling points, or if one of the materials would be degraded by the temperature required for distillation. The method utilizes a solvent that preferentially dissolves one or more components of a solid or liquid mixture. The targeted constituent material (*solute*) is transferred from the feed liquid to a solvent that is immiscible with the feed liquid (or, if the feed material is a solid, is not a solvent for its basic material). In some operations, notably the recovery of metals from ores, there is a chemical interaction between the solvent and the solute.

With liquid-liquid extraction, using *tower extractors* without agitation, the heavier liquid - either the feed liquid or the solvent - is fed from the top of a column or tower and the lighter liquid from the bottom. The heavier liquid flows downward over a series of baffles or sieve plates, or through packing designed to ensure the maximum contact between the liquids, and maximum transfer to the solvent of the constituent material. The lighter liquid may be sprayed into the heavier liquid to promote contact. Sometimes mechanical mixing is used to ensure thorough contact. If the feed liquid and solvent are not separated by the column or tower, they can be decanted, and separated by settling, into two liquids. After the solvent has dissolved the material to be separated from the feed material, it is removed from the solvent, usually by distillation. The extraction process is used only when the solute is easier to separate from the solvent than from the feed liquid, when the solvent can be recovered and when the loss of solvent is minimal. Distillation is usually simpler and less costly than extraction and is preferred if it can be used. Fig. 11C3 shows a schematic representation of extraction and distillation.

There are other extraction approaches. Some towers are equipped with reciprocating trays or rotary agitators. Others use valves that promote pulsing action. In the *mixer-settler* method, the feed liquid and solvent are agitated by turbine or propeller mixers. Then the liquids are allowed to separate into layers by gravity. Extraction can be carried out on either a batch or continuous basis, depending on the production quantity involved. Exctraction is used in separating caffeine from coffee, and some aromas and flavors from foods using supercritical carbon dioxide as a solvent. It is also used to remove waxes, sulfur compounds, and other unwanted materials, from high quality lubricating oil and in the production of penicillin and other antibiotics, acetic acid, and caprolactam (monomer for nylon-6). Extraction is also used in the production of copper, uranium, cobalt, nickel and vanadium, and in the recovery of tar acids from crude coal tar oil[4]. A further application is the removal of organic pollutants such as phenol, resorcinol, and cresol, from industrial waste water using a hydrocarbon solvent.

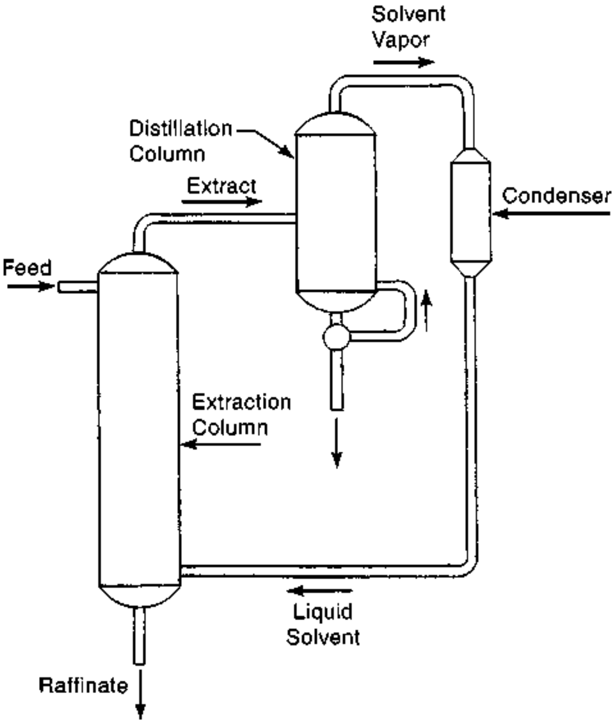

Fig. 11C3 The extraction process. A mixed liquid or solid is fed to the extraction column where one or more of its constituents are dissolved in a solvent. The solvent is piped to a distillation column and condenser where the dissolved constituent is separated from the solvent and discharged. The solvent is then reused.

Sometimes, several stages of extraction are used to ensure maximum separation. The modified feed material exiting from the extraction equipment is known as *raffinate* and may undergo stripping (See C2 above) to remove any solvent it contains. The solvent, after it has dissolved the desired material is called the *extract*. The extract from one stage of extraction may be used as feed material for a subsequent stage. This method is called *crosscurrent extraction* and can have two or more stages. Sometimes, in *fractional extraction*, different solvents are used in two stages.

When the feed material is solid, the terms *leaching* or *solid extraction* may be used to designate the removal of a soluble constituent by selectively dissolving it in a solvent[5]. The balance of the treated material is not dissolved. The feed material may undergo particle size reduction to provide more area of contact between the feed material and the solvent. One of two basic methods is used to apply the solvent to the solid material. Either the solvent is allowed to percolate through the feed material, or the material is dispersed into the liquid. With percolation methods, the feed material is contained in a chamber with a porous or screened bottom. Solvent sprayed into the chamber flows through the solid material, dissolving the wanted fraction, and exits through the porous bottom. In continuous operations, this operation may be carried out by conveying the feed material past a series of solvent spray heads. At the end of the series, the spent solids are discharged from the end of the conveyor. The flow of the solvent is counter to that of the solid material. The freshest solvent is applied to the nearly spent solid material, and is recycled to spray more solid material closer to the head of the conveyor. The richest solvent is sprayed on the material just entering the system. This approach makes the most efficient use of the solvent. Counterflow of solvent is also used in processes in which the feed solid is immersed in the solvent. Fig. 11C3-1 shows such an arrangement.

The second principal method, *dispersed-solid leaching*, involves thorough agitation of the feed material and solvent mixture. The agitation scatters and circulates the solid material and insures thorough contact between solid material and solvent. Then the mixture is allowed to settle to allow the immiscible materials to separate. Centrifuges may be used to hasten the settling.

Leaching is used in the processing of copper and other ores, the extraction of oil from soybeans, the extraction of sugar from sugar beets by using water as the solvent, the production of tannins from tree bark, and in processing Chilean nitrate. A long-standing example of leaching in hydro metallurgy is the dissolution of alumina from bauxite ore with a caustic pressure method[4]. Copper and uranium are leached with a microbiological leaching liquid containing the bacterium thiobacillus ferrooxidans[4].

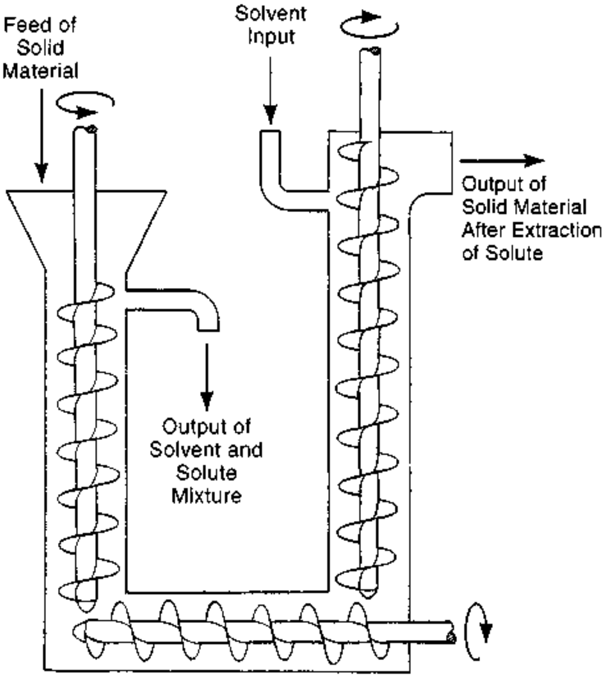

Fig. 11C3-1 Counterflow of solvent and solid material in one method of solid extraction.

In all extraction and leaching processes, the final step is the separation of the solvent from the dissolved material, the *solute*. They are separated by distillation, evaporation, precipitation, membrane separation or crystallization. The solvent, then, normally is reused.

C4. ***expression*** - consists of pressing out, by various methods, liquids contained in a solid material. Expression is frequently used to obtain fragrances or flavors from fruit or other plant material. Its purpose may be to dry the solid material, but most often it is to remove the liquid for other uses. Expression is much more energy-efficient than liquid removal by evaporation or solvent extraction or leaching. Both batch and continuous process methods are in use, depending on production volumes. Batch methods may be manual or machine-based and, if machine-based, may be automatic. Continuous process methods produce a constant stream of the desired liquid. One manual method for removing oil from fruit involves cutting the fruit, trimming off the peel, soaking the peel in water for several hours and then pressing the peel against a sponge. The sponge absorbs the oil. When sufficiently filled, the sponge is squeezed to remove the oil. This method is used for obtaining lemon oil. Machine-based batch methods utilize a container with a porous or perforated bottom or wall. Pressure from a ram, or from compressed air, exerted through a rubber bladder, compresses the feed material so that liquids are expelled.

Continuous process methods, currently in use, utilize one of several available press types[5]. Screw presses use a helical screw, somewhat similar to those used in plastics extrusion and injection molding machines. The feed material is forced into a confined space as the screw rotates. Screened or perforated walls around the screw allow passage of the expressed liquid. Disc presses uses two opposed rotating discs with perforated surfaces. The discs are tilted, so that there is less space between them at the bottom. Feed material, between the discs, is compressed as it works its way to the bottom where the discs are closer together. Perforations in the discs allow the liquid to flow. Roll presses use perforated or screened rollers. Feed material is compressed between the rollers, releasing the contained liquids. Belt presses use screens or perforated belts. As the feed material is transported between two belts, it passes through narrower zones and is compressed, so that the liquid it holds is released to pass through the belts.

Olive, castor, sesame and other seed oils are all obtained by expression, but this approach has many other applications. They include: processing of sugar cane and sugar beets, manufacture of perfume, extraction of pectin and oil from citrus peel, processing of starch and corn silage, dewatering of paper mill or sewage sludge, manufacture of calcium chemical compounds, and processing of magnesium hydroxide, fillers for paper and plastic, and concentrates of metal ores[5].

C5. ***crystallization*** - A dissolved material in solution can often be separated from the solvent by crystallization, the formation of solid, homogeneous particles. If a saturated solution is cooled, the solvent's ability to retain the dissolved material in solution is usually diminished. When the solution is progressively cooled, the solution will become supersaturated and, if nuclei or seed particles are present, the solute will start to deposit on them and form crystals. (Seed particles may have to be added.) If enough material forms a crystal, the solution will no longer be saturated, but further cooling causes it to be supersaturated again and the crystals will increase in size. The crystals can be removed from the mixture when they become large enough. The process must proceed slowly if the crystallized material is to be free of the solvent and other materials that may be present. If the solution contains more than one dissolved material, careful control of the temperature may make it possible to form crystals of one material while the other or others remain in solution. Then, afterward, one or more of the other solutes is crystallized. This process is called *fractional crystallization*. In other cases, supersaturation for crystallization is brought about by evaporation of the solvent rather than by cooling the solution, by both cooling and evaporation, or by adding a substance to the solvent that reduces its solvent property for the material to be crystallized. This third method is used frequently in the pharmaceutical industry when the solute is dissolved in water and alcohol is added to the solution to cause it to become supersaturated. Some crystallizers use a partial vacuum to produce evaporation of the solvent and coincidentally, adiabatic cooling of the feed solution. Crystallization is an economical way to purify some materials because only one step is required, and energy requirements are low compared with distillation and other methods of purification[5]. Typical purities for many crystallized materials range between 99.5 and 99.8 percent[5]. Higher purities can be obtained if the feed material is partially purified before crystallization. Crystallization is also used to put many specialty chemicals, that are to be sold, in an attractive and practical form.

Both batch and continuous crystallizing equipment are employed. Batch processes are used for smaller quantities, and when the crystals need to be within a very narrow size range. All equipment has some means of creating and maintaining a supersaturated solution. Depending on the nature of the solution materials, this may involve cooling the solution, evaporation of the solvent, or a combination of both. Vacuum crystallizers are common. They use a vacuum to produce evaporation and take advantage of evaporative cooling to supersaturate the feed solution. Mixers provide agitation, which equalizes the temperature and concentration of the solution and keeps crystals in suspension. Fig. 11C5 illustrates a Brodie countercurrent, continuous crystallizer in which cooling of a hot concentrated solution is used to create crystals. The feed solution enters near the bottom of the system and flows upward through a system of joined tubes that are jacketed with cooling channels. As the feed solution moves through the system, it is cooled and crystals form. The crystals are conveyed in the opposite direction, and eventually spill into a purification column. As the crystals move through the system toward the column, they continually make contact with a more concentrated feed liquid. Fig. 11C5-1 shows a batch crystallizer.

Crystallization also takes place when a melted material solidifies, when solid material forms from a vapor, or when an existing solid changes to a

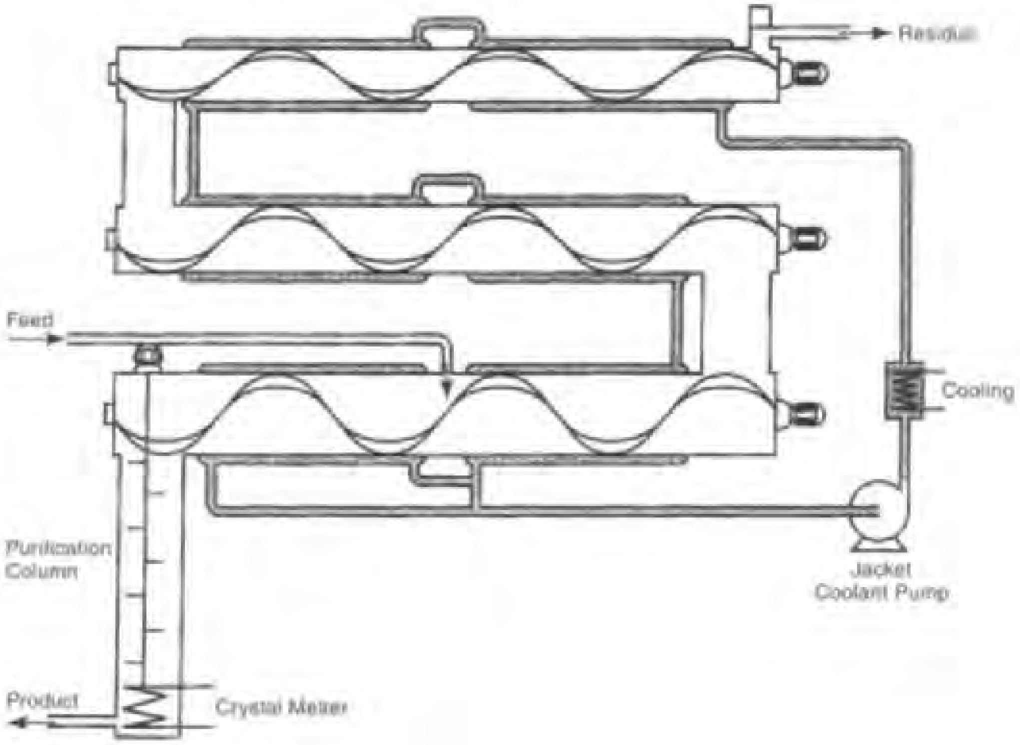

Fig. 11C5 The Brodie countercurrent cooling crystallizer. (*Courtesy Burns and McDonnell Engineering, Kansas City, MO.*)

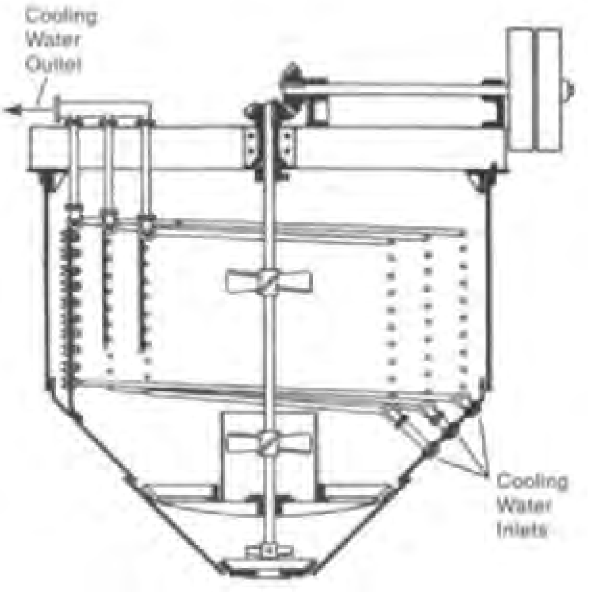

Fig. 11C5-1 A batch crystallizer with cooling coils and agitation. (*by permission, from Introduction to Chemical Engineering, W. L. Badger and J. T. Banchero, McGraw-Hill.*)

different phase. Crystallization from these phases is also used to provide purer material. Crystallization from the melt is used in *zone melting* to purify metals, and in petroleum processing to remove waxes from lubricants[6].

C6. ***precipitation*** - is the formation of a more visible or recoverable state of material from solution within another material. The formation can take place as a result of either a physical or chemical change, which reduces the solubility of the dissolved material or the dissolving power of the solvent. A common industrial application is the formation of a solid material that settles out, and is centrifuged or filtered from a liquid. This result is often achieved by adding a compound which causes a reaction in the solution that converts the material to be separated to an insoluble state. An example in nature is the formation of rain or fog in the atmosphere, when the air is cooled below its dew point. In chemical industries, a liquid material can be similarly precipitated as a condensate from a gas.

Sometimes, with metal alloys, a precipitate of a solid phase of one metal occurs within the solid phase of another metal. The hardness or tensile strength of the metal may be thus increased[1].

Crystallization, described above, meets the above criteria but the distinction with crystallization is that the solid substance yielded by the process has an organized structure.

Precipitation has been used as an important means of separating metals from aqueous solutions. (See K1a1 below.) It is also carried out as part of a chemical analysis (gravimetric analysis) of the starting solution, but instrument methods have generally replaced the precipitation techniques for such analyses.[3] In biochemical applications, salts, solvents or polymers may be added to the feed solution to induce precipitation of wanted materials, or impurities and contaminants[5].

C7. ***fluid-particle separation*** - There are a number of methods for separating solid particles from gaseous or liquid streams. They include: sieving or screening, filtration, sedimentation, centrifugation and cycloning, flotation, evaporation, magnetic and electrostatic separation, membrane separation, the use of scrubbers and the drying of solid materials. (Note: Some of these methods are more applicable to separating fractions of solid materials from other solid materials and are described in C8 below.) Fig. 11C7 charts the applicability of particle separation methods with respect to the usual range of particle sizes.

C7a. ***filtration*** - is the separation of solid particles from a fluid-solids suspension by passing the mixture through a porous barrier. The objective of the operation is either to capture the solid material

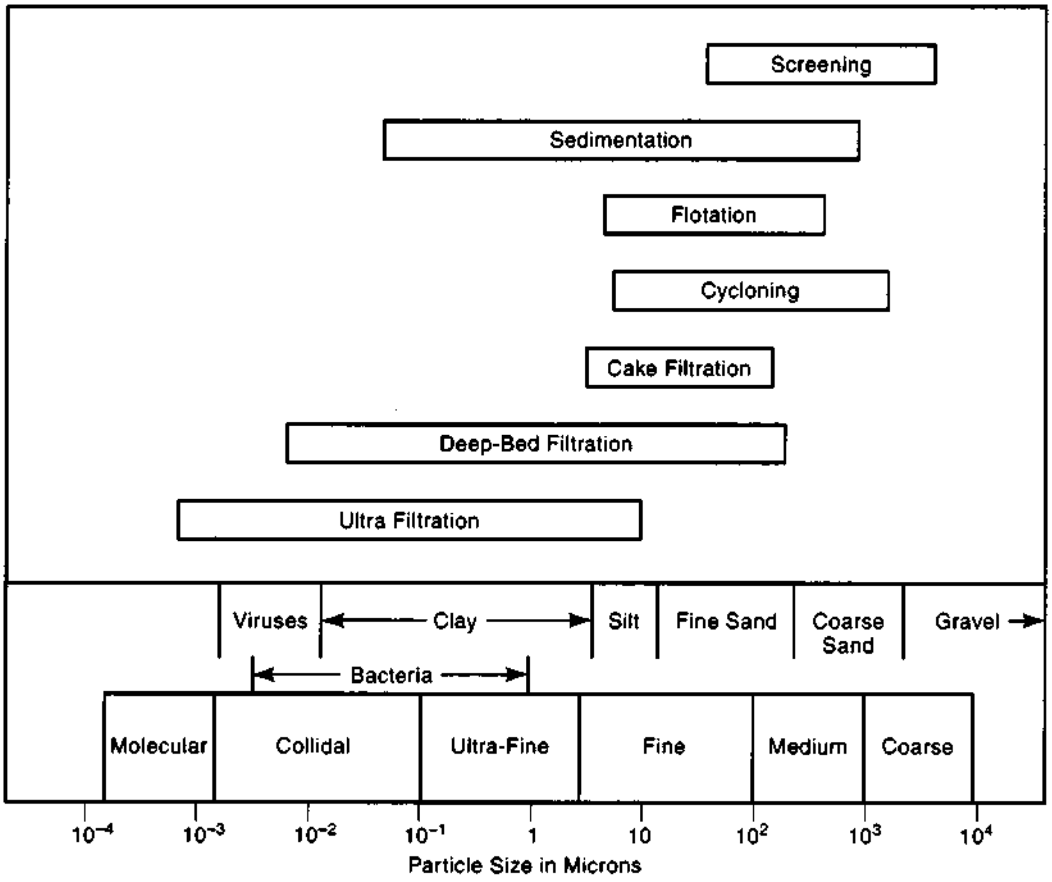

Fig. 11C7 The usual range of particle sizes applicable to several common fluid-particle separation methods. (*Based on data from Dorf*[9].)

from the fluid or to clarify the fluid, or both. The barrier retains most of the solid particles that were part of the mixture. Both gaseous and liquid mixtures are filtered. The fluid flows through the filtering medium because of a pressure differential created across the medium. The differential is supplied by gravity, by pressure applied on the feed side of the filter or by vacuum on the discharge side, or both, or by centrifugal force. The fluid that passes through the filter is called *filtrate*. Normally, the separation of the particles from the fluid is not perfect; filtering cost is higher as the degree of separation becomes higher.

C7b. ***types of filters*** - When the solid particles are blocked at the surface of the filter material, and form a layer or cake of filtered material that increases in thickness as the filtration proceeds, the process is called *cake filtration*. The cake, itself, becomes the prime filter medium. (If the purpose is to capture the solid material, *cake filtration* is always the process.)

When the solids are blocked within the filter medium instead of at its surface, the process is called *deep-bed filtration, depth filtration, filter-medium filtration* or *clarifying filtration*.

Crossflow filters are configured so that the feed slurry moves across the face of the filter, preventing a build-up of solid material on the filter, but allowing some of the feed liquid to pass through the filter.

Filtration can be either a batch or continuous process. When continuous, means must be included to periodically remove the cake, if any, or otherwise remove solid material that clogs the filter. Backwashing is one common method of unclogging deep-bed filters. A clear liquid is pumped through the filter in a reverse direction.

Many materials are used as filter media. They include woven and non-woven textile fabrics, metal fabrics and screens, pressed felt, and cotton batting, filter papers, rigid but porous fabrications of metals, graphite or ceramics sintered from a powdered form of the material, animal and plastic membranes, and granular beds of various solid materials. Sand, for example, is widely used as a filter medium in water supply systems. Woven canvas cloth is a common industrial filter medium. Cloths made from synthetic fibers are used when high chemical resistance is needed[8]. Diatomaceous earth (DE) is often used as a filter aid. When mixed with a slurry, DE provides increased porosity to inhibit clogging of cake[8].

Except for bag filtration, described below, cake filtration is used almost solely for separating solids from liquids. It may be operated with an added pressure differential. The cake must be removed or the filter base back-washed periodically. Because of this, most cake filters operate on a batch basis. Cake filters are normally used when the feed liquid contains 1% or more of solids[4].

Clarifying filters have openings that may be larger than the particles filtered, but have means of trapping, within the filter, the particles to be removed from the feed fluid. These filters are generally used when the portion of solid material in the feed fluid is small, less than 1% but, often, 1/10 percent or less. They are used to clean gases, to clarify beverage liquids and to remove unwanted solids from lubricating oils, pharmaceuticals, beverages, foods, electroplating solutions, and fuel oil[8]. Clarifying filters may include pads of cotton, felt, cellulose pulp, and glass fiber, all used in filtering gases. Beds of sand are used for filtering water. Beds of various other granular materials may also be used.

Fig 11C7b illustrates the principles of three kinds of filtration.

Gas filtration is used to remove dust and other particles from a gas, either because of the contamination or inconvenience they cause or to recover the particles for some useful purpose. Paragraph 11C7f describes the bag filter method. Two other methods are granular-bed filtration which uses beds of carbon particles, sand or other materials as a filter medium and air filters that use a mesh of loosely compacted fibers, often coated with a viscous material. These filters trap particles of dust and other solids which are suspended in air or another gas. They are usually used with dust concentrations of 5 grains per 1000 cu ft (5 grains per 28 cu m) or less. (Also see cyclone separation in paragraph C7e1 and electrostatic separation in paragraph C8e below.)

Filter presses are machines with sets of plates stacked together. The plates are concave or separated by spacers to provide cavities for the feed liquid. Each cavity contains a cloth or other filter medium, an inlet for feed liquid and an outlet for the filtrate. The inlet and outlet openings are joined so that there is one feed inlet and one filtration outlet from the stack. Use of multiple plates provides a large filtration area.

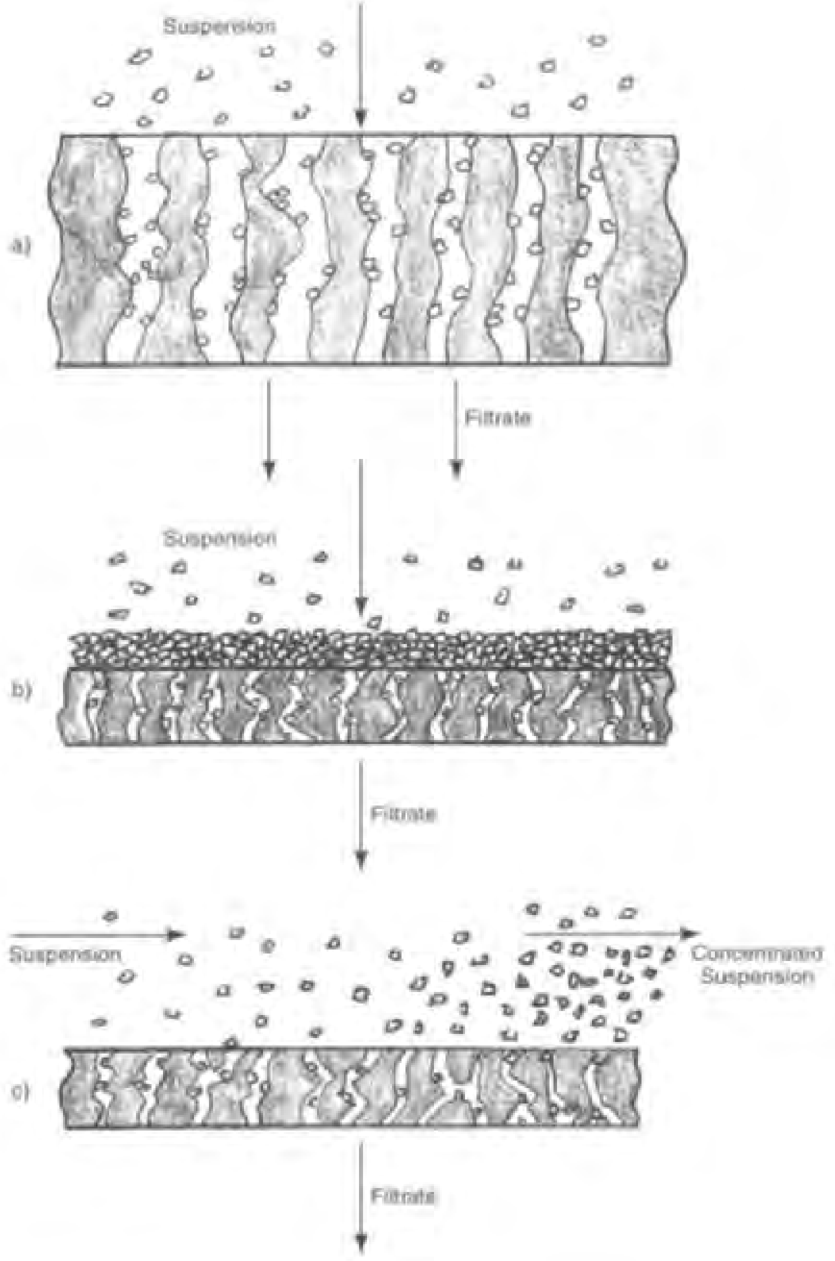

Fig. 11C7b Schematic representation of three kinds of filtration: a) deep-bed filtration, b) cake filtration, c) crossflow filtration.

Pressure is usually applied to the feed slurry. Most filter presses are equipped for back-flow washing, but may have to be opened for removal of dense filter cakes. Many presses are equipped to do these operations automatically[8]. Fig. 11C7b-1 shows a typical horizontal filter press.

Centrifugal filtering makes use of the tremendously higher forces that centrifugation provides, and can be used for materials that form a porous cake. (Centrifugal processing for other operations, as well as filtering, is discussed below in 11C7e.) One major centrifugal filter application is in sugar

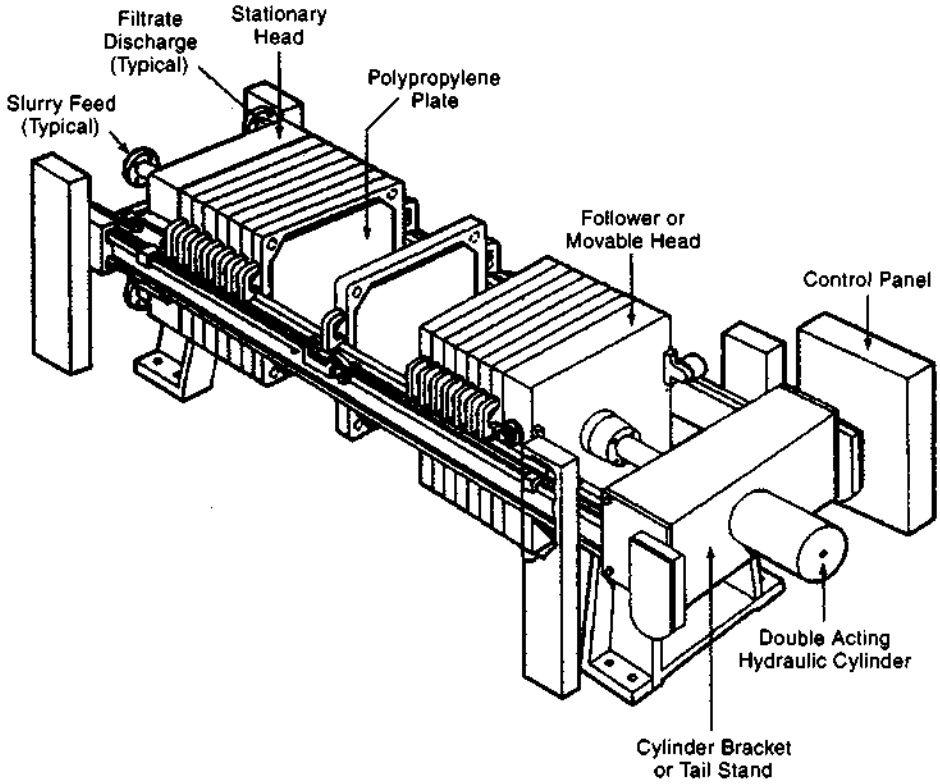

Fig. 11C7b-1 A filter press equipped for automatic operation, with a horizontal stack of filters that act in parallel. (*Courtesy Shriver Filters, Dorr-Oliver USA Inc.*)

processing where the method is used to separate sugar crystals from a slurry of crystals and a sugar solution.

Filtering is extensively used in chemical, food, beverage, and pharmaceutical processing, both in laboratory and production work. Mineral processing, water processing, and sewage disposal are other applications. The manufacture of phosphoric acid includes filtration. It is also used to remove waxes from other products during petroleum refining. Fig. 11C7b-2 illustrates a typical continuous filtration machine that uses a belt filter cloth to support a cake filter. Fig. 11C7b-3 shows the principle of operation of a vacuum rotary-drum filter, a commonly used continuous method.

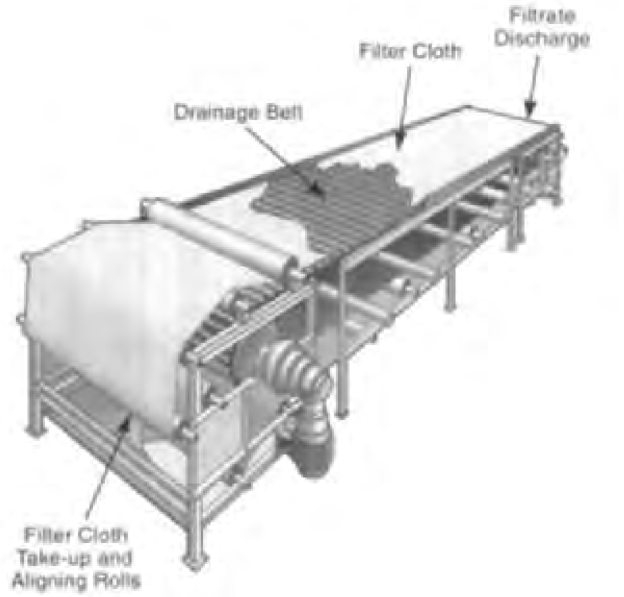

Fig. 11C7b-2 A horizontal continuous belt filtration machine. (*Courtesy Door-Oliver Eimco USA, Inc.*)

C7c. ***membrane separation (including ultra filtration)*** - uses a thin semi-permeable barrier, most commonly a plastic sheet, to separate a mixture of miscible fluids. The feed stream is

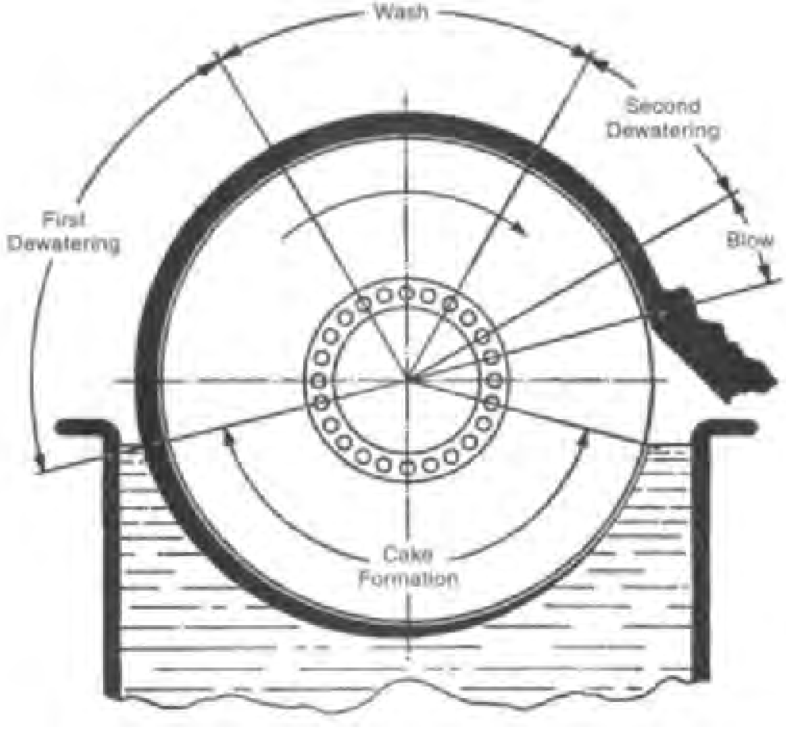

Fig. 11C7b-3 The principle of operation of a typical rotary drum filter. The drum rotates on a horizontal axis and is partially immersed in a container of feed liquid. The drum rotates slowly, clockwise in this view. The drum surface is porous and is covered with a filter medium. Segments of the drum, which would appear pie shaped in this section view, are isolated from one another so that a vacuum or pressure may be applied. Filtrate flows into the portion of the drum that is immersed in the feed liquid, sometimes aided by a vacuum, and filter cake forms on the surface. Filtrate is pumped away. As the drum rotates, each segment moves out of the liquid. Sprays wash the cake that has formed. The segment is still under vacuum and the wash water is diverted from the feed liquid. As the drum rotates, the vacuum is replaced by positive pressure which blows against the filter cake to loosen it so that it can be removed from the drum by a doctor knife. The segment is then ready to reenter the feed liquid and receive more filtrate. (*by permission, from Introduction to Chemical Engineering, W. L. Badger and J. T. Banchero, McGraw-Hill.*)

introduced to one side of the membrane, usually under pressure, and the permeate (filtrate) collects on the other side. Although their non-porosity is in some dispute[5], membranes, said to be non-porous, are used for separation of gases and other ultra fine materials. Membranes can be very selective in allowing passage of one or more materials in a feed stream but not the other components. Fig. 11C7c shows membrane separation schematically. In practice, membrane separation equipment uses stacked arrays of membranes, with feed and filtrate channels to increase the membrane area. Fig. 11C7c-1 shows several arrangements.

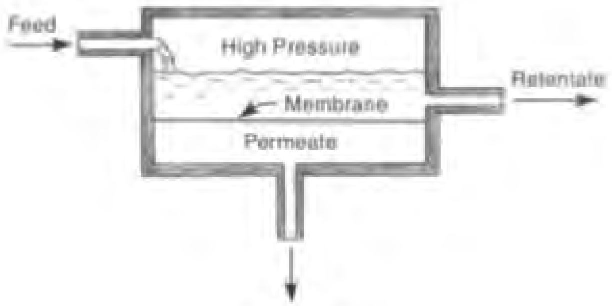

Fig. 11C7c Schematic representation of membrane separation.

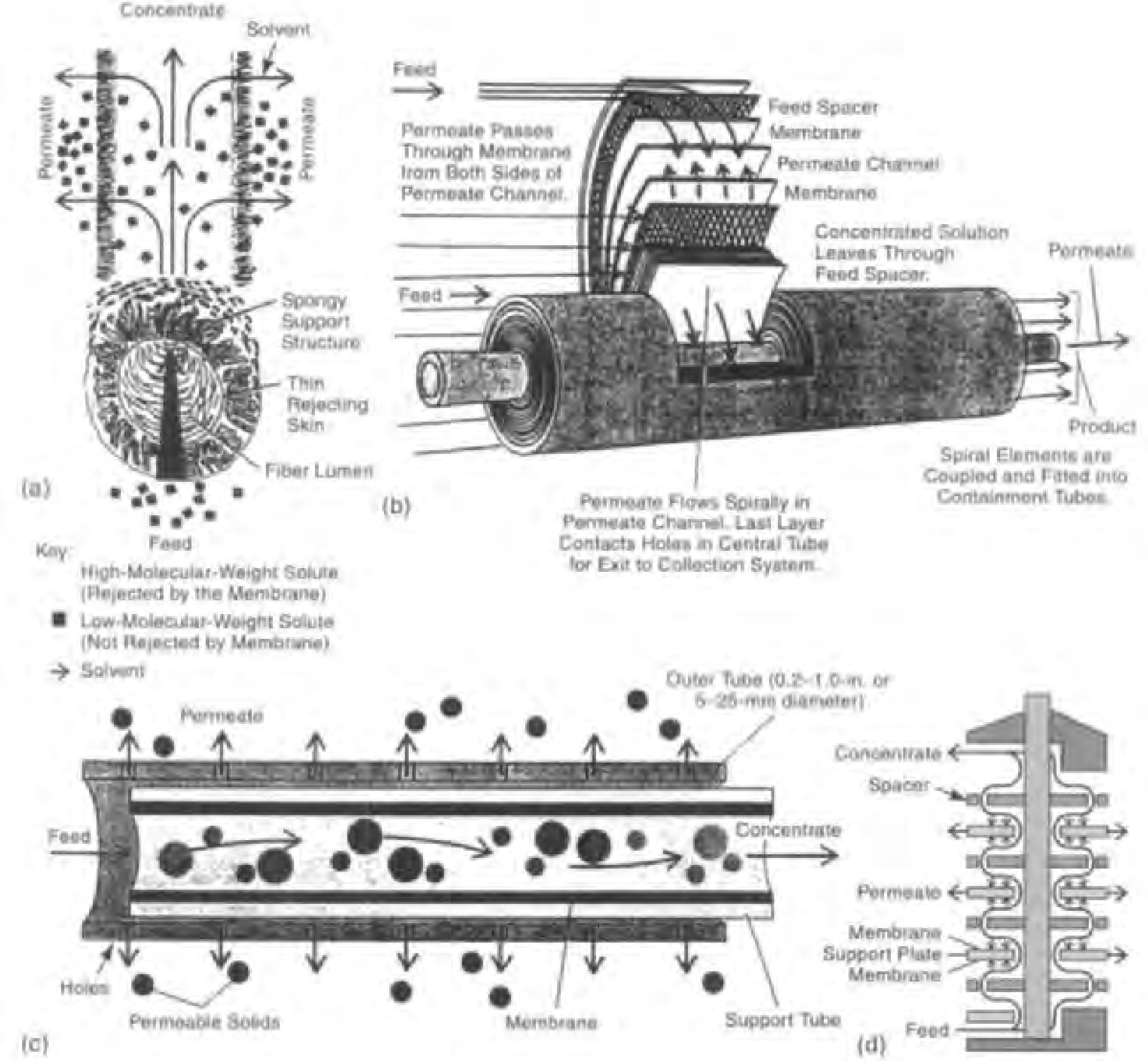

Fig. 11C7c-1 Several arrangements for membrane separation: a) hollow fibers, b) spiral-wound, c) tubular, d) plate system showing internal flow. (*Reproduced with permission from the McGraw-Hill Encyclopedia of Science and Technology, 8th Ed., McGraw-Hill, New York, 1997.*)

Ultra filtration is the separation of very fine particles (macromolecules and colloidal suspensions) from a liquid containing dissolved low molecular weight species. Filtration is with a membrane filter having extremely small openings. Pressure differences of 10 to 200 psi (70 to 1400 KPa) provide the force to move the liquid through the membrane[4]. The feed liquid normally contacts the filter by cross flow. (See view c, of Fig. 11C7b above.)

Dialysis is another membrane separation technique that prevents passage of higher molecular weight solutes and particles (molecular weights over 1000) through the membrane while allowing lower molecular weight solutes and ions to pass. Regenerated cellulose is the most common membrane material. A concentration difference across the membrane provides the driving force[4]. Dialysis is used in removing waste products from the blood of medical patients with kidney disease, in the food industry to desalt cheese whey solids and in microbiology to recover enzymes from cultures[2].

In *reverse osmosis*, the pressure differences across the membrane are as much as 800 psi (5500 kPa) and the permeate is water or another liquid. Almost all solutes and suspended particles are retained in the concentrated feed liquid.[4] (Also see reverse osmosis and ultra-filtration of foods in 12F3.)

Membrane separation is widely used in desalting sea water, purifying water, separating nitrogen from air, production of chlorine, and for separating many organic vapors and gases. In the process, which uses a non-porous membrane, molecules dissolve and diffuse through the membrane, although transient gaps may open within the membrane. In addition to plastics, metals, ceramics, polymer solutions and liquids may be used as membranes. (Liquid membranes are contained in porous media or are immiscible in the fluid being processed.) The shape of the membrane may be tubular or spiral wound from sheet as well as flat.

C7d. ***sedimentation*** - is a means of effecting partial separation of suspended solid particles in a gas or liquid by utilizing gravity to settle the particles. With liquids, the purpose may be to clarify the liquid for its later use (*clarification*) or to separate or concentrate the particles for later use (*thickening*). Several factors affect how the operation is carried out. They include: the degree of concentration of the particles, the viscosity of the liquid, the degree of sedimentation needed, the desired throughput rate, the density of the particles, their size, and their cohesiveness.

Sedimentation using liquids is normally performed in a shallow, round tank of large area, with a bottom that slopes slightly toward the center. Feed piping delivers the liquid or slurry of input material to the tank. Solid material is drained from a central discharge gate that can be opened or closed. The tank includes a raking mechanism on a large arm that slowly traverses the entire area of the tank. Blades on the arm sweep the solid material toward the central discharge gate. Clear liquid spills over the edges of the tank. Large scale equipment may employ tanks as large as 500 feet (150 m) in diameter. With tanks of that size, the raking mechanism may make only two rotations per hour. Fig. 11C7d illustrates one of these devices, which are called *thickeners*. Flocculants are often added to the input material to facilitate the sedimentation. They cause fine particles to agglomerate after which they settle much more quickly.

Thickeners are commonly employed in mining operations. Other applications are cement manufacture, sewage treatment, water purification and the production of magnesium from sea water[8].

Clarification usually involves dilute suspensions. One common application is municipal water or waste processing. Clarifiers and thickeners are very similar but clarifiers often can be built with a lighter structure.

C7e. ***centrifugation*** - applies centrifugal force to separate solids from liquids or gases, and immiscible liquids from each other, as well as to aid filtration as discussed above. Centrifugation tremendously increases the separative force of gravity, greatly speeding up the separation process. Large amounts of material can be processed in little space. The material to be processed is put into a centrifuge, a device incorporating a round container which rapidly rotates. Centrifugal force drives the heavier, denser component of the mixture outward to the container walls. The strongest centrifugal forces, over 100,000 times gravity, are obtained in very small centrifuges rotating very rapidly. Sedimentation of a liquid slurry can be performed with a centrifuge using a solid bowl; perforated bowls are used for filtration. The porous or perforated wall allows liquids to escape while solid material remains in the rotating container. Centrifugation is used in many chemical processes, in removing water from jet engine and diesel fuel, in sugar refining, in separating cream from milk, in rendering oil from animal and vegetable sources, in clarifying liquids, and in the treatment of municipal sewage. Isotopes are separated with centrifuges, and blood cells are separated from whole blood. Centrifuges are of several types, some of which are designed for continuous operation. Others are semi-continuous, providing for continuous removal of liquid but with periodic stops for removal of solids. Because centrifugal forces are much stronger than gravity, some machines can be arranged with a horizontal axis of rotation. Flocculants and coagulants may be added to the feed slurry. Fig. 11C7e illustrates the principle of centrifugation.

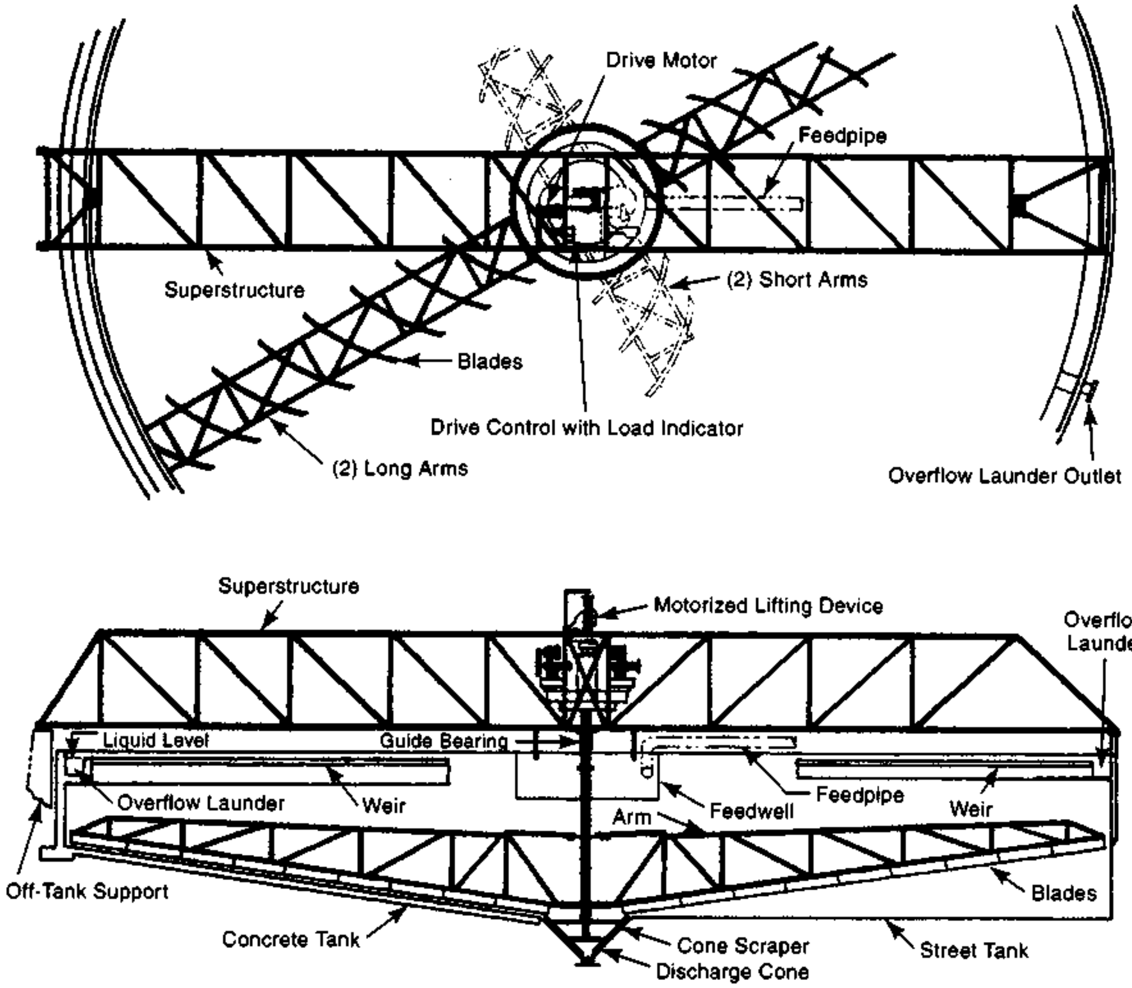

Fig. 11C7d Large thickener with mechanism supported by a bridge. (*Courtesy Dorr-Oliver Eimco USA Inc.*)

Tubular-bowl centrifuges employ long, narrow, cylindrical bowls which rotate very rapidly inside a steel container. Typical bowls are 3 to 6 in (7.5 to 15 cm) in diameter and 30 in (75 cm) in length, rotating at 15,000 RPM[10]. Feed liquid enters at the center of the bowl bottom. Suitably located discharge ports at the top of the bowl, one for light material near the center of rotation, another for heavier material near the bowl walls, carry the processed material to separate discharge spouts. Fig. 11C7e-1 illustrates a tubular-bowl centrifuge for separating two immiscible liquids.

Disc-bowl centrifuges are wider and squatter than the tubular bowl type. They include a series of conical surfaces, called discs, that are stacked with fixed spacing around a central axis of the centrifuge. The discs rotate with the bowl and also have holes in alignment with holes in the discs above and below. Feed liquid enters the centrifuge at the top of the central axis. The holes in the discs allow the feed material to flow between the discs. The heavier liquid collects and flows outward on the underside of the discs from centrifugal force. The lighter liquid flows toward the center on the upper surfaces of the discs. There is shearing at the interface of the two liquid fractions and the distance each drop of liquid must flow to enter the applicable outgoing flow is very small. This improves the effectiveness of the centrifuge in separating the two fractions including those with emulsions. Typical

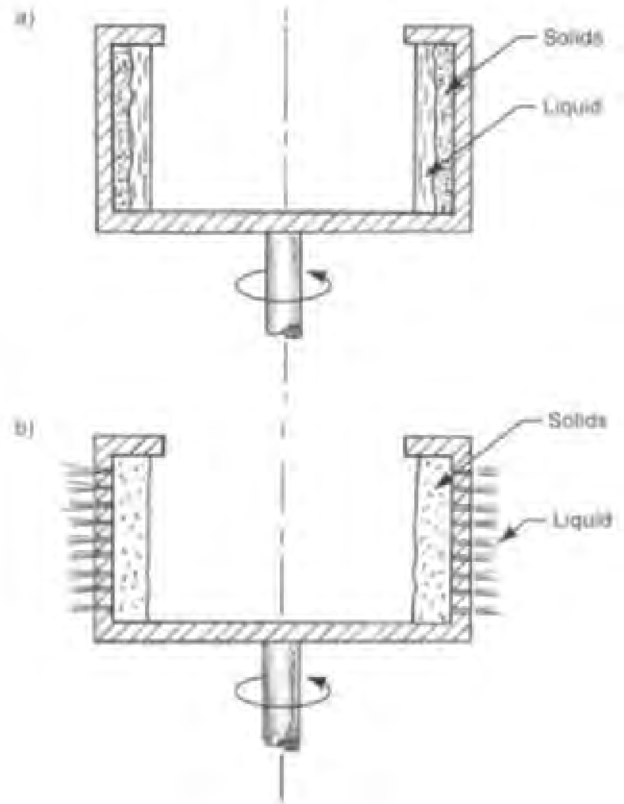

Fig. 11C7e The principle of centrifuging showing the effect of centrifugal force when the device is in operation. In view a), sedimentation takes place in the impervious bowl, creating separate layers of solid and liquid material which can be removed separately. In view b), centrifugal force drives the solid material to the bowl wall where it is retained and forms a cake filter. The bowl is porous, allowing the filtered liquid from the slurry to escape.

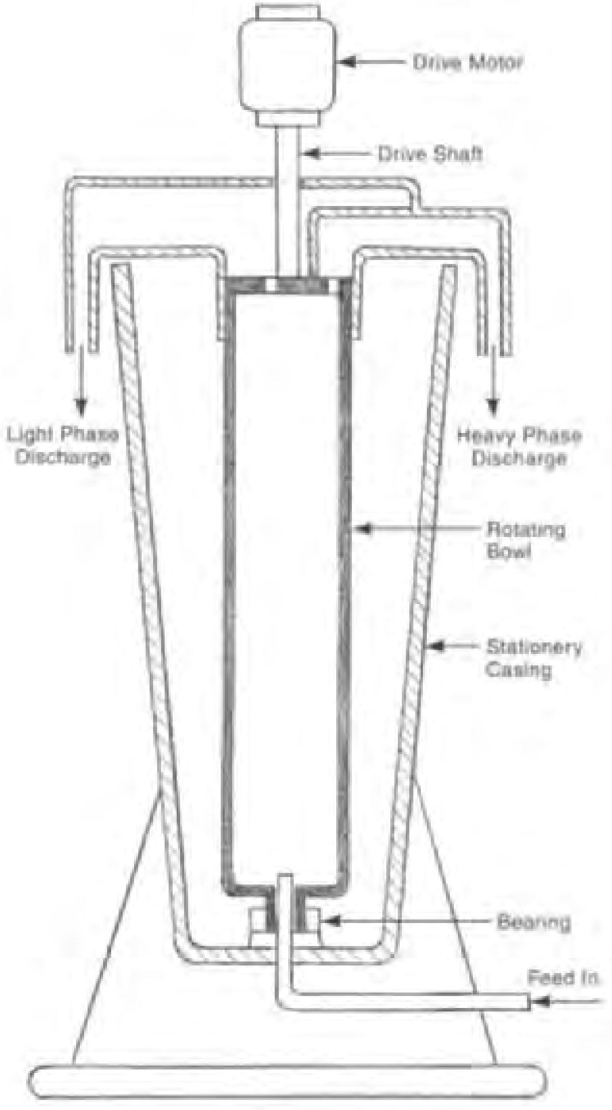

Fig. 11C7e-1 Tubular-bowl centrifuge for separating two immiscible liquids. The heavier liquid gravitates to the walls of the rapidly rotating bowl and leaves the centrifuge from the spout on the right-hand side. The lighter liquid remains closer to the center of rotation and leaves the centrifuge on the left-hand side. Feed liquid enters the centrifuge from the bottom.

bowl diameters are 8 to 40 in (20 to 100 cm). Spacing between discs ranges from about 0.020 to 0.050 in (0.5 to 1.3 mm). A disc-bowl centrifuge is illustrated in Fig. 11C7e-2.

Fig. 11C7e-3 illustrates a typical horizontal industrial centrifuge that separates liquids into two different products in a continuous operation.

Small-diameter, high-speed centrifuges are used in the filtration of varnishes and vegetable oils, the removal of wax from lubricating oils, and the filtration of crude-oil emulsions. Centrifuges are used to remove small amounts of solids from beverages, inks, lubricating oil and other liquids, particularly slimy solids that would clog a filter[8].

The term, *centrifugal molecular distillation* is often used when centrifugal force is applied to separate two gases. An instrument called a vortex is

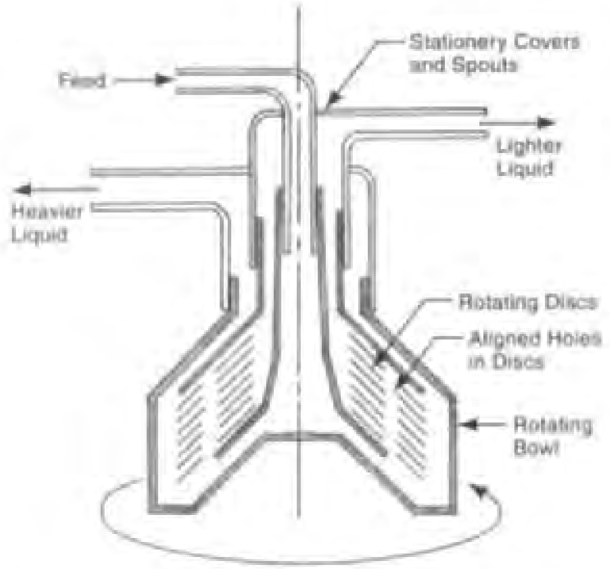

Fig. 11C7e-2 The disc-bowl centrifuge incorporates closely spaced, cone-shaped, rapidly rotating "discs" which effectively separate emulsions and other immiscible liquids. The dense liquid flows outward on the underside surfaces of the disc; the lighter phase flows inward on the top disc surfaces.

used. It consists of a centrifuge that spins rapidly, causing the heavier gas to migrate to the outer portion and the lighter gas to remain in the center. The two gases are withdrawn through suitably placed outlets. The method is used in uranium enrichment processing to separate the U-235 isotope from U-238 by centrifugal molecular distillation of uranium hexafluoride gas. The products of the first separation may be cycled through several additional vortex stages to achieve the desired degree of purity in the final products. Many stages are required for uranium enrichment.

C7e1. ***cyclone separation, cycloning*** - Another centrifugal device, the cyclone separator or *hydrochlone*, does not use a rotating container. Instead, the fluid to be processed is released in a high-velocity stream tangentially to the walls of a round stationary container. The container may also be conical. Centrifugal forces are not as large as with a centrifuge but cyclones are widely used to remove liquids and solid particles from gases and, with smaller units, solid particles from liquids. Separation can be effected from differences in particle size or from differences in particle density, or both. (In popular usage, the terms cyclone and hydrochlone are interchangeable; in strict usage, hydrochlone applies to those devices used with liquid/solid mixtures.) Fig. 11C7e1 illustrates a typical cyclone separator. Cyclone separation applications include separation of heavy and coarse materials from fine dust, classification of pigments and other powdered solids, removal of carbon from gypsum, in the production of alumina, and removal of wood chips and sawdust from woodworking operations. The approach does not always provide

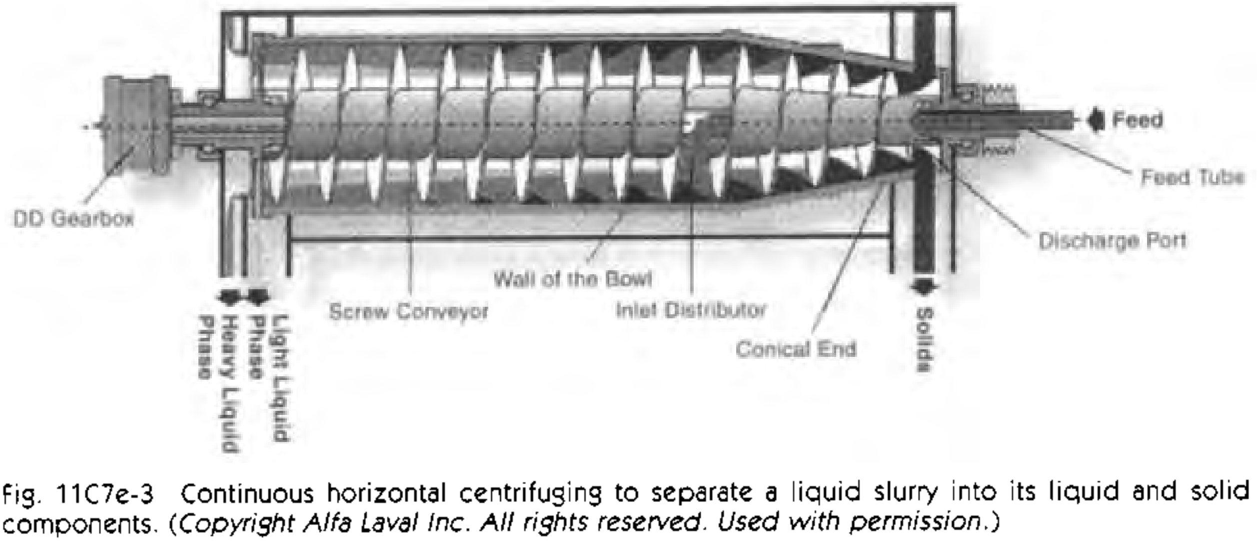

Fig. 11C7e-3 Continuous horizontal centrifuging to separate a liquid slurry into its liquid and solid components. (*Copyright Alfa Laval Inc. All rights reserved. Used with permission.*)

Next Page

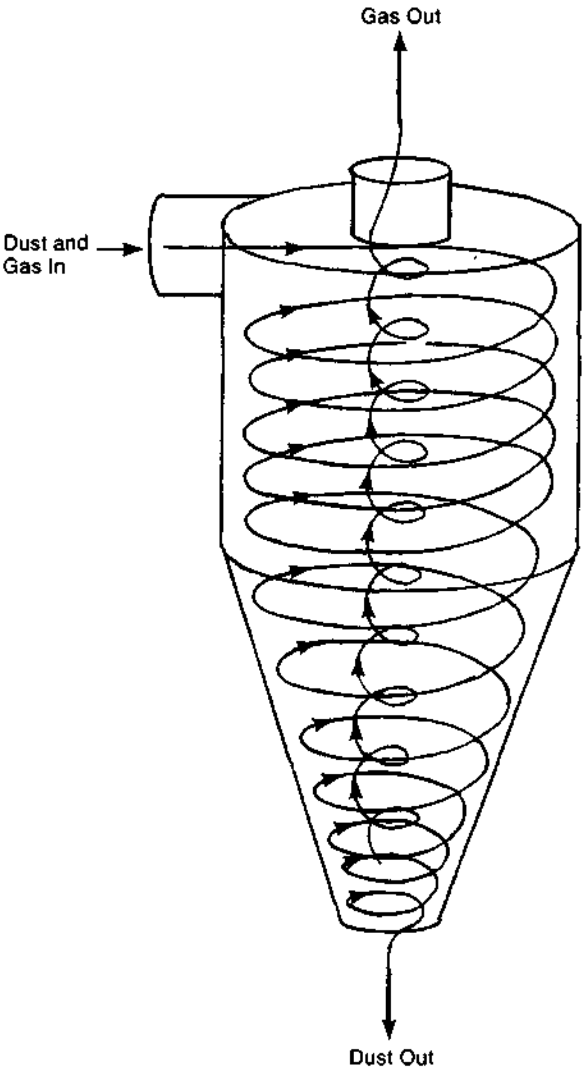

Fig. 11C7e1 A cyclone separator. The gas-particle material enters the device at high velocity and continues on a circular path inside the container. Solid particles tend to remain closer to the walls of the container and fall to the bottom while the lighter gas exits from the central vent.

extremely high separation efficiencies and works best for heavier and coarser dust. Fine dust is better removed with the similar *air separators* which combine centrifugal force with a flow of additional air. This air picks up the finer dust particles but the machine is designed so that the speed of flow of the air containing fine dust is then slowed. The dust then falls from the slow moving air into a discharge chute.

C7f. ***bag filtering*** - An array of bag filters in an enclosure, commonly referred to as a *baghouse*, is often used to separate fine dust from air or other gases, after cyclone separators have been used to separate coarser dust. Bag filters may also be used in conjunction with air separators. A baghouse is illustrated in Fig. 11C7f. Long, narrow filter bags, made from woven cloth, felt or a membrane, are drawn taut in a sealed chamber. Suction fans feed the dust-bearing air into the chamber and through the bags which hang upside down with their bottoms open to the intake gas. The dust laden gas is blown upward through the bags. The dust collects in the bags while the gas passes through the bags and exits from the top of the baghouse. The layer of dust, as well as the filter fabric, acts as the filter. In most equipment with a filter cloth, the openings in the cloth are larger than the dust particles so the filter allows some dust to escape until the dust layer is formed. Thereafter, the filtering action is very efficient except for particles smaller than 0.01 micron (0.0000004 in) in diameter. At regular intervals, the suction fan stops, the exhaust manifold is closed and outside air is allowed into the chamber from outside the bags. This reverse air flow loosens the dust inside the bags. The bags are then agitated and the dust falls into a hopper below. Then, suction and collection of the dust in the bags resume. In this way, the dust collection is intermittent but the operation of the equipment is continuous and automatic. Some installations use several bag compartments side by side, so that bags in some units can be emptied while other units continue in operation. This equipment is a common part of dust collection apparatus in industry, when the operations are smokey or dusty. The maximum operating temperature of the filter medium limits the temperature of the gas that can be filtered, but glass and polymer filter materials raise allowable temperature to the 450 to 550°F (230 to 290°C) range[5]. In some installations, the air or gas to be processed is passed through cooling coils before entering the baghouse.

C7g. ***evaporation*** - is the conversion of a substance from a liquid to a gas. The change is effected by the application of heat. In some instances a vacuum may also be applied. Evaporation is commonly

Previous Page

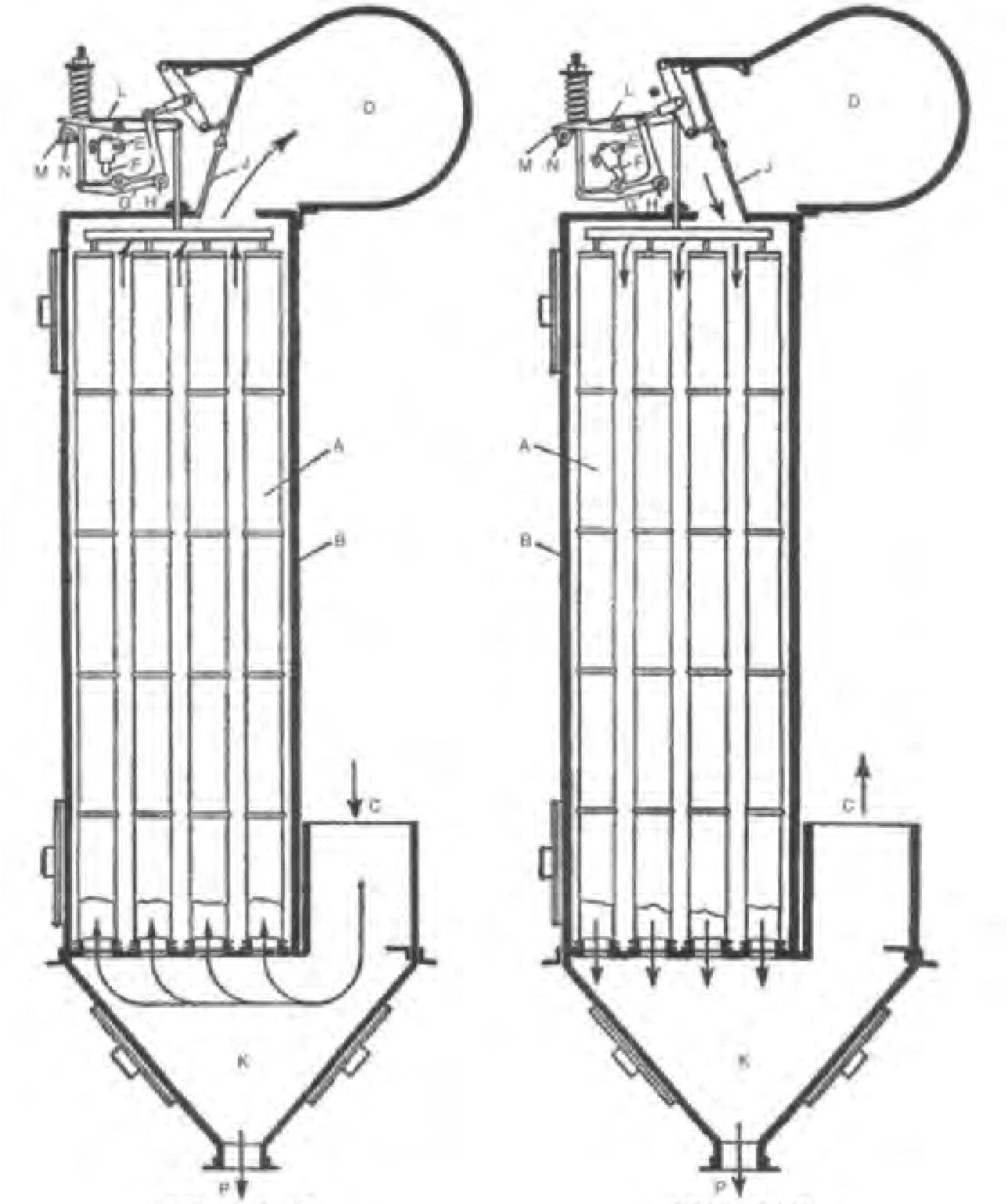

Filtering Period

Shaking Period

Fig. 11C7f A bag filter for removing dust and other particles from a gas. The left-hand view shows the filter in operation; the right-hand view shows the changed baffle position during the shaking period. A, filter bags; B, casing; C, inlet connection; D, discharge manifold; E, slow-speed shaft; F, cam; G, bell-crank lever; H, bell-crank-lever pivot; J, damper; K, dust hopper; L, shaking lever; M, shaking cams; N, cam shaft; P, product discharge. *(by permission, from Introduction to Chemical Engineering, W. L. Badger and J. T. Banchero, McGraw-Hill.)*

used to make a solution more concentrated for later distillation, or for another operation. The production of orange juice concentrate is an example of a process that includes evaporation. The other common goal of evaporation is to separate a solid material from a solvent liquid, for example, the recovery of salt from brine. In common usage, the term, *distillation*, is used when there are one or more liquid constituents to be removed from a solution by selectively vaporizing and condensing it, whereas *evaporation* is used to separate a solid or, as indicated, to concentrate a solution. Evaporation may be part of a crystallization operation. Distillation includes condensation; evaporation does not necessarily involve that step. In the majority of evaporations, the solvent to be evaporated is water. Sodium sulfate ($NaHSO_4$) and caustic soda ($NaOH$) are two materials produced from evaporated brine[6]. Evaporation is frequent in the food industry, to reduce the volume of a product for easier shipment and storage. Concentration of the juice from sugar cane, prior to crystallization of the sugar, is a common evaporation operation.

Evaporators provide heat by one of a number of methods, further discussed in paragraph N below. Usually the heating medium is separated from the feed liquid by tubular elements, double walls, jackets, or flat plates. Steam or hot gas is the normal heating medium. The heating medium is sometimes brought into direct contact with the feed liquid. Heating by solar radiation is another method. Forced circulation of the feed liquid past heating surfaces is common. *Multiple-effect evaporators* use several stages of heating from one original heat source. In a triple-stage ("triple-effect") evaporator, the vapor from the first stage ("first effect") supplies heat for the second effect and then the vapor from the second effect heats the third effect. This sequence provides better energy efficiency than a single-effect unit. The flow of the feed liquid may be either forward or reversed in the system. Fig. 11C7g shows a simple batch kettle evaporator with a steam jacket. Fig. 11C7g-1 illustrates several alternative approaches in evaporator design.

C7h. ***scrubbers*** - or ***wet collectors,*** remove solids or liquids from gases using water or another liquid to capture the particles of the unwanted material. There are many varieties of scrubbers. With some types, a common method is to spray the liquid into the gas so that many tiny droplets of the liquid capture the particles of solid material that it carries. A common arrangement is to provide an upward stream of air or gas containing unwanted material, and a downward spray of water or other capturing liquid from a series of nozzles. Fig. 11C7h illustrates another scrubbing method, a *multi-washer scrubber*. The gas to be scrubbed enters the device near the bottom and moves in an upward spiral inside the walls of the device. The gas passes through curtains of liquid that have come from the top of the device and over deflector cones. Dust or other solid particles contact and are captured by the liquid, which exits the device at the conical bottom along with the trapped particles. The gas is diverted to pass a series of vanes and then through an entrainment separator and out of the top of the scrubbing device.

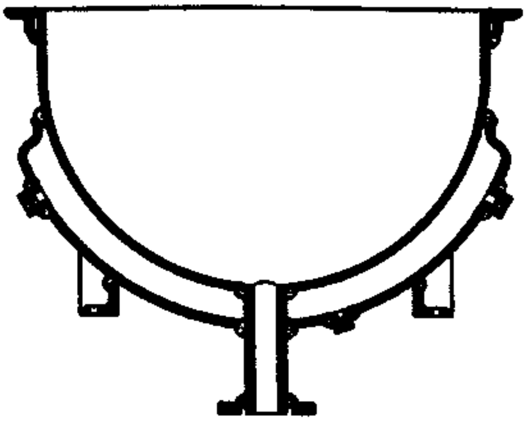
Fig. 11C7g A simple kettle evaporator with a steam jacket used for batch evaporation operations. (*by permission, from Introduction to Chemical Engineering, W. L. Badger and J. T. Banchero, McGraw-Hill.*)

The venturi scrubber is another common type. The gas is introduced downward into a funnel-shaped container, the liquid distributor. Liquid is introduced tangentially at the top of the same container .and coats its walls, where it is contacted by the gas. Both gas and liquid flow downward in the funnel-like container to the bottom where there is a venturi throat that has an adjustable opening. Both liquid and gas flow through the venturi and are squeezed together, thoroughly mixing them. The adjustment at the venturi throat (usually not really a venturi)

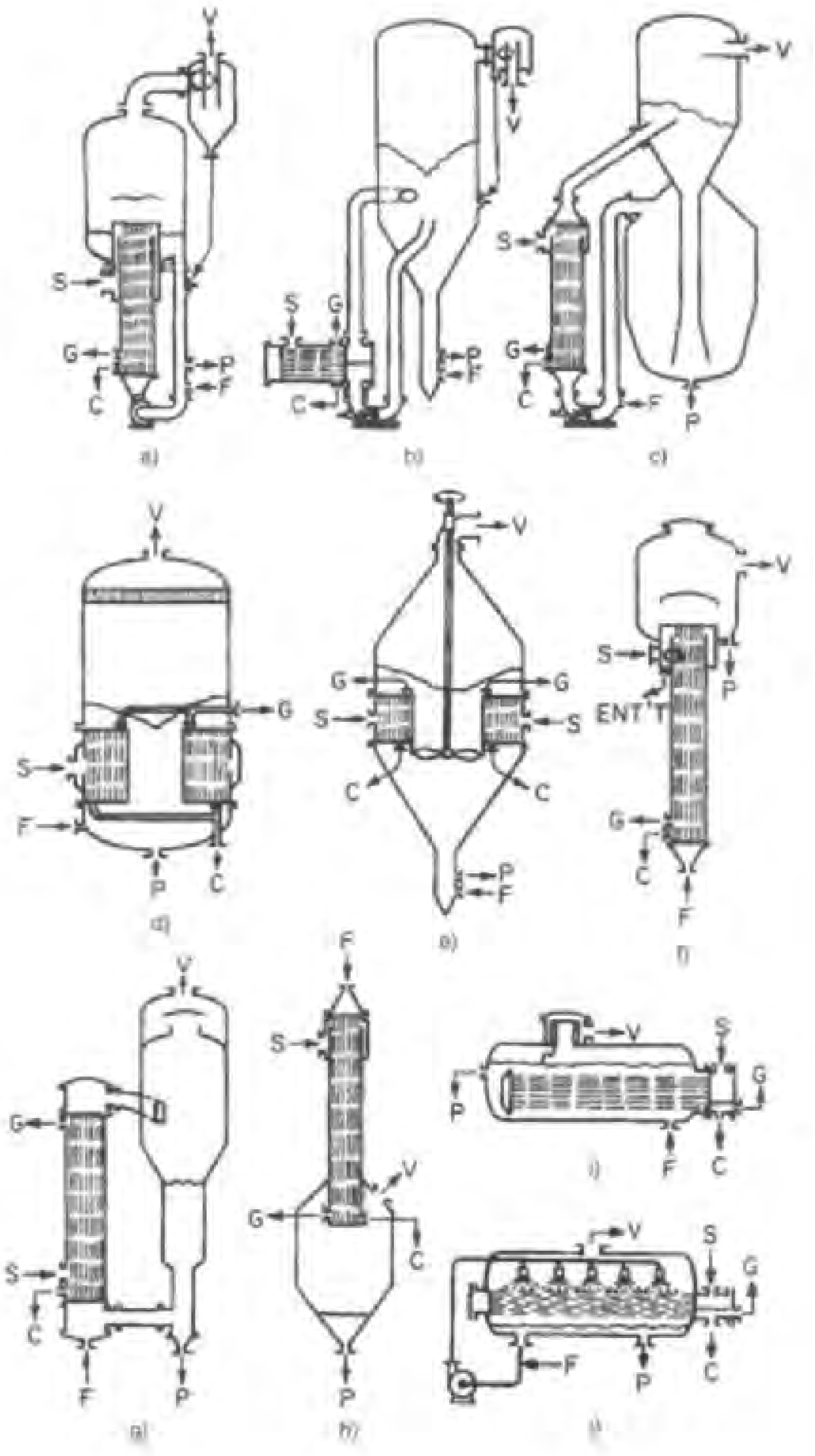

Fig. 11C7g-1 Various evaporator types. a) is a forced circulation evaporator. b) is the much more common submerged tube forced circulation type frequently used for production of salt. c), Oslo-type forced circulation evaporator used in crystallization. Pumps in a), b) and c) ensure circulation of the liquid to be processed in the equipment. d) is a short-tube vertical unit commonly used to evaporate cane sugar juice. (e) is a propeller evaporator. The propeller increases capacity. f), g), and h) are long-tube vertical evaporators that provide the lowest cost evaporation capacity. g) is the recirculating type evaporator with rising film, used for condensed milk. h) is a falling-film type of evaporator. Both g) and h) are used extensively for fruit juices and other heat-sensitive liquids. i) and j) are horizontal-tube evaporators, used for sea water evaporation. C=condensate, F=feed, G=vent, P=product, S=steam, V=vapor, ENTT=separated entrainment outlet. (*Reproduced with permission from Perry's Chemical Engineering Handbook, R.H. Perry and D.W. Green, McGraw-Hill, 1997.*)

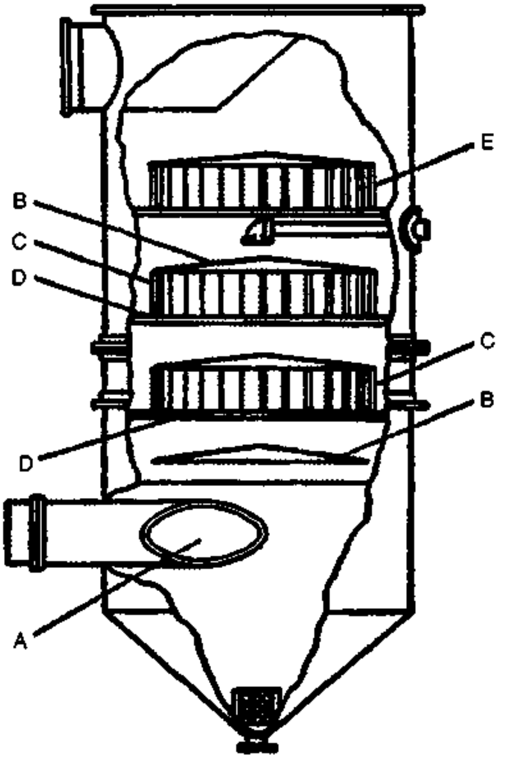

Fig. 11C7h A multi-washer scrubber (dust collector). Gas or air containing dust enters the gas inlet at the bottom of the device and moves upward confronting several stages of liquid curtain. The liquid captures the dust and carries it to the outlet at the bottom. A, gas inlet, B, deflector cones, C, vanes, D, shelves, E, entrainment separator (*Courtesy CMI-Schneible.*)

controls the pressure drop in the device. The liquid and gas are then directed to an entrainment separator, which is usually of the cyclone type. If a cyclone separator is used, the liquid with entrapped particles is discharged at the bottom of the cyclone and the gas at the top. Other scrubbers are similar to gas absorption towers. Still others, called mechanical scrubbers, use blowers or fans to provide the liquid spray that contacts the feeder gas.

Scrubbers are used frequently to remove dust and smoke from the exhaust air of various industrial processes. They have the advantage of fire prevention that bag filters and other types of dust collection do not have. They are used in paper mills, sugar mills and asphalt plants.

C8. ***separation of solids*** - Various methods are in use for separating particles of solid materials with methods that make a separation based on differences in size, density and other properties. Common methods include screening, flotation, dense media separation and magnetic and electrostatic methods.

Another method, air classification, is described in section E5 of Chapter 13.

C8a. ***screening (sieving)*** - is a common method for separating material into the size ranges wanted. Woven wire screens, perforated sheet steel or welded meshes of metal rods or wire are used. The screen openings are of uniform size and act as "go" gages, permitting the passage of gases, liquids and smaller pieces and preventing the passage of larger pieces. Material, in particulate form, is dropped or dumped on the screen, the screen is agitated, and the force of gravity normally drives the particles, if small enough, through the screen. The undersize pieces that pass through the screen are called *fines*, the oversize pieces that do not are call *tails*. The method is applicable for both small and large particles. Small pieces, below 2 in in size, are normally separated by flat screens which oscillate or vibrate to move the particles to screen openings. Most screening, however, takes place with particles ranging from 0.004 to 0.4 in (100 microns to 10 millimeters). Screen movement is produced by electric vibrators, eccentric drives or unbalanced rotating weights. Screens are often stacked so that particulate materials of several size ranges can be removed from the feed at different levels. To dislodge jammed particles in the screen, some equipment includes rubber balls below each screen. The balls bounce from the screen's movement and strike the underside of the screen. If pieces are 2 in or larger in size, the most common screening method utilizes a cylindrically shaped screen, open at both ends. The cylinder is tilted from the horizontal and rotated about its axis. Material, fed at the upper end, works its way through the cylinder and out at the lower end, if pieces are larger than the screen openings. If they are smaller, the pieces pass through the screen. The cylinder may have zones of different mesh openings; usually the finer meshes are first followed by progressively larger openings. Fig. 11C8a shows the cylindrical screen arrangement.

Screening may be performed for many reasons: removal of solid particles from a gas mixture,

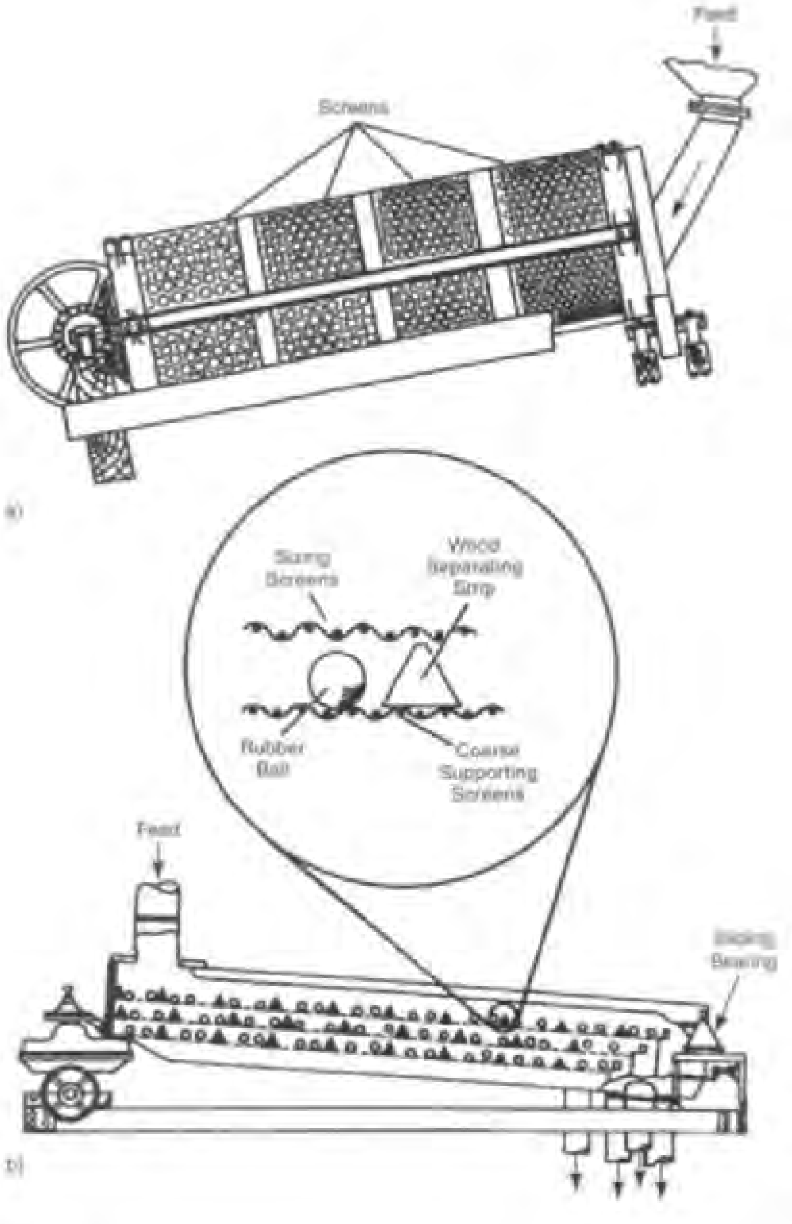

Fig. 11C8a Two types of screen systems for separating solid pieces or particles by size: a) rotating cylindrical (trommel) screen. b) oscillating flat (gyratory) screen. (*Courtesy McGraw-Hill. From McGraw-Hill Encyclopedia of Science and Technology, 1998, New York*).

removal of water or other liquids from a mass of solid material, removal of trash or other extraneous material from processed material, removal of oversize or undersize particles from solid particulate material so that it can be further processed, division of material into batches of certain minimum and maximum particle sizes, and modification of the size distribution of particles comprising a lot of particulate or powdered material.

C8b. ***flotation*** - takes advantages of differences in wettability of materials to effect separation. It is an important method for concentration of metal ores. The process is usable when materials can be reduced to particles smaller than 150 microns. If the material tends to be hydrophobic, that is, not readily wetted by water, it can be separated from materials that are hydrophilic, readily wetted by water. In an aqueous slurry of a mixture of both kinds of particles with suitable chemicals, air bubbles introduced to the slurry will tend to attract the hydrophobic particles but not the hydrophilic particles. The air bubbles will rise to the surface of the liquid, taking the hydrophobic particles with them. This forms a layer of froth on the surface of the liquid slurry and, when the froth is removed, the particulate material is removed with it. The term *froth flotation* is often used. Fig. 11C8b illustrates the process.

Flotation is most frequently used in mineral applications in concentrating the ores of copper, lead, zinc, molybdenum and nickel[5]. Other materials processed are fluorspar, barite, glass sand, iron oxide, pyrite, manganese ore, clay, feldspar, mica, spodumene, bastnasite, calcite, garnet and kyanite[5]. The process is used in coal cleaning to separate the coal from shale and pyrite. Another common use is the separation of silicate minerals.

The material to be processed must be conditioned first. The solid material must be reduced to suitable particle size. Then, oil or other surface-activity modifiers are usually added to the slurry to adjust the wettability of the solution and to disperse the solids in the slurry. Collectors, consisting of organic chemicals that, when coated on the material to be floated, change them from hydrophilic to hydrophobic, are sometimes used. Other additives promote the formation of a stable froth.

Several methods are available instead of air injection to create the bubbles that carry the hydrophobic particles to the liquid surface. They include electrolytic flotation, where a direct electrical current between electrodes creates bubbles of oxygen and hydrogen. Dissolved air systems can also be used. They introduce air to the liquid under pressure and then release the pressure, causing fine bubbles to develop in the slurry. Mechanical flotation cells use mixing impellers and baffles to disperse air in small bubbles in the slurry. *Skin flotation* involves the use of a thin layer or oil on the surface of the water. The feed material is immersed in the water; and the oil aids in the flotation of the wanted material, while the other materials sink. This approach is used in diamond mining and the processing of phosphates.

C8c. ***dense-media separation***[5] - is also known as *heavy-media separation* or *sink-float separation.* Materials to be separated are immersed in a liquid

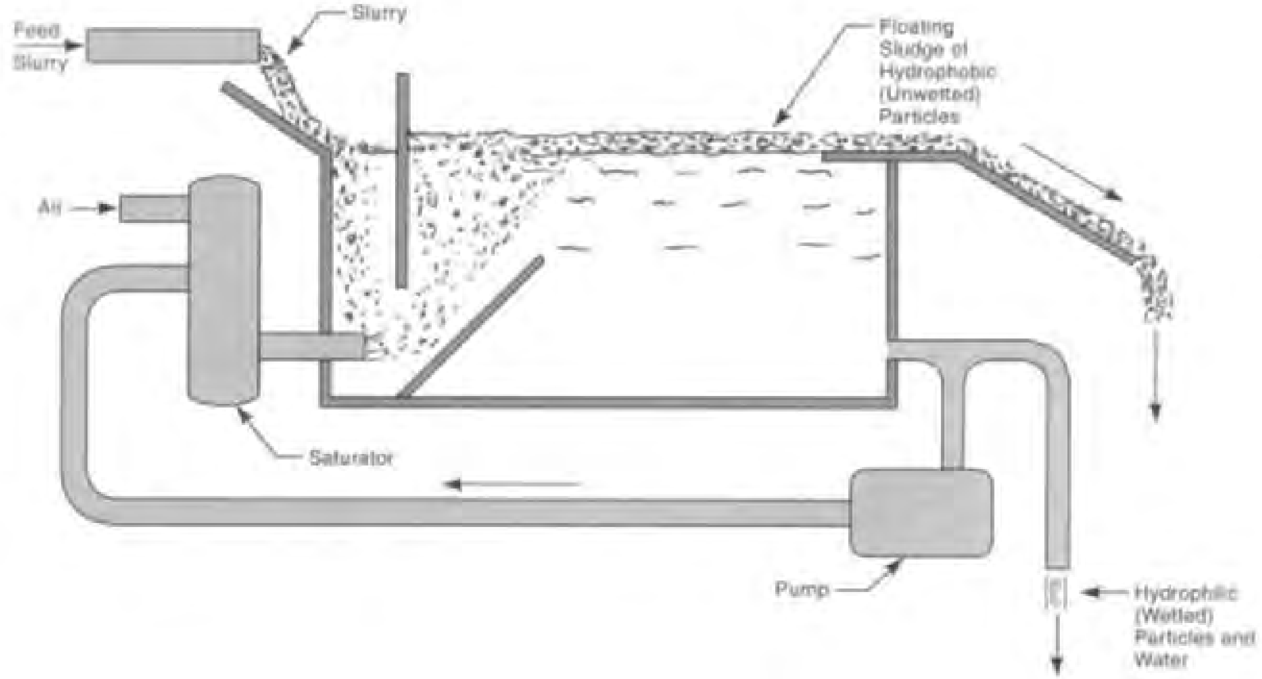

Fig. 11C8b Separation by flotation shown schematically. Hydrophobic (non-wettable) particles are carried to the surface of a water slurry by air bubbles and are skimmed off while hydrophilic (wettable) particles remain dispersed in the water.

of high specific gravity. The specific gravity of the liquid used is less than that of the more dense fraction of the feed material, but more than that of the less dense fraction. Particles of lighter, less dense material float, while particles of heavier, more dense material sink.

The liquid used is developed for the particular application. Normally, it is made by adding a dispersion in water of fine-grained particles of a dense material. Magnetite, arsenopyrite, or ferro silicon, are three minerals commonly used. Mild agitation keeps the particles in suspension, and the flotation effect of the liquid depends on its overall specific gravity, including both the water and the contained particles. The magnetite or ferro silicon can be removed by magnetic methods. The method is in common use in the separation of components of mineral ores, but the most notable use is the removal of foreign materials from coal.

C8d. ***magnetic separation*** - has been used for many years as a method for removing magnetic materials from mixtures. The method is not limited to ferromagnetic substances such as iron, nickel, and cobalt which can be permanently magnetized. It is also used for other materials that can be either attracted (paramagnetic materials) or repelled (diamagnetic materials) by a magnetic field and to separate materials that have different degrees of magnetic attraction. Commonly processed materials include: tramp iron, which is separated from ores, and iron ores, which are concentrated by the process, particularly when magnetite is a major ore ingredient. Silicates and ores of manganese, titanium, and tungsten that have some iron content are separated magnetically. Magnetic separation is also used to remove some magnetic contaminants from foodstuffs. Factors that affect the operation are particle size and the nature of the other materials in the mixture that may impede the movement of the magnetically attracted or repelled material. When there is a strong magnetic attraction, lift magnet equipment may be used. With this equipment, material on a belt conveyor passes under a magnetic belt that lifts the magnetic particles from the mixture on the conveyor and moves them to a discharge point as shown in Fig. 11C8d. Another common device is the magnetic pulley or drum which Edison invented for the processing of nickel ore[5]. It is shown in Fig. 11C8d-1. Some devices use several stages of separation, in which material remaining from one stage is run through another set of separators, perhaps several times, to enrich the magnetic concentrate and further purify the non-magnetic material. Superconducting magnets are sometimes used with paramagnetic materials or where conditions justify the extra separative forces they can provide. Magnetite processing is one such application; another is the treatment of kaolin (aluminum silicate clay)[5].

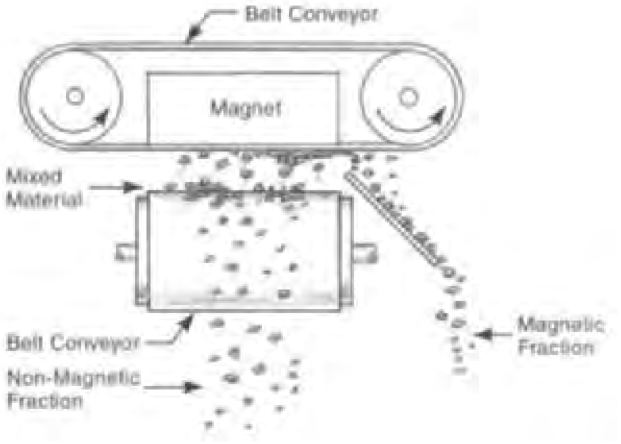

Fig. 11C8d The magnetic separation of materials.

C8e. ***electrostatic separation***[5] - is based on the principle that conductive and non-conductive materials, in particle form, behave differently when they are electrically charged and then subjected to the influence of an electrical field. The electrostatic force between the charged particles and the electrical field moves the charged particles in one direction. However, conductive materials lose their charge and are then not affected by the electrical field. Non-conductive materials tend to retain an electrical charge and are subject to

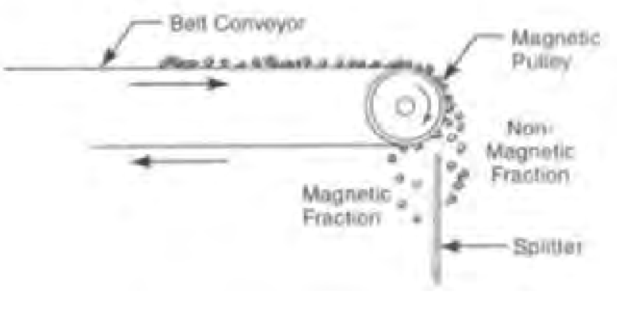

Fig. 11C8d-1 Edison's device for magnetic separation of nickel ore.

movement. This phenomena can be used to separate the conductive from the non-conductive materials. The force must be strong enough to overcome gravity, inertia, friction, cohesion and other drag forces. The materials are first charged by electrical contact, induction or ion radiation. Favorable separation forces are limited to particles smaller than about 4 mm (0.16 in) and larger than about 0.075 mm (0.003 in) if the particles are granular, but somewhat larger particles can be processed if they have long and thin shapes. Sometimes it is possible to separate material of different sizes.

The process can also be used to separate two non-conductive materials that assume opposite charges when they are charged by contact and then make contact with each other. The positively charged particles are attracted to the cathode of the separation system and the negatively-charged particles are attracted to the anode. Fig. 11C8e illustrates this method of electrostatic separation.

Electrostatic separation is widely used in the processing of mineral ores including the processing of iron ore concentrates and heavy mineral sands containing zircon, rutile and monazite[3]. Another common application is the recycling of plastics when nonferrous metals are to be separated from the plastic material or when one plastic material is to be separated from another.

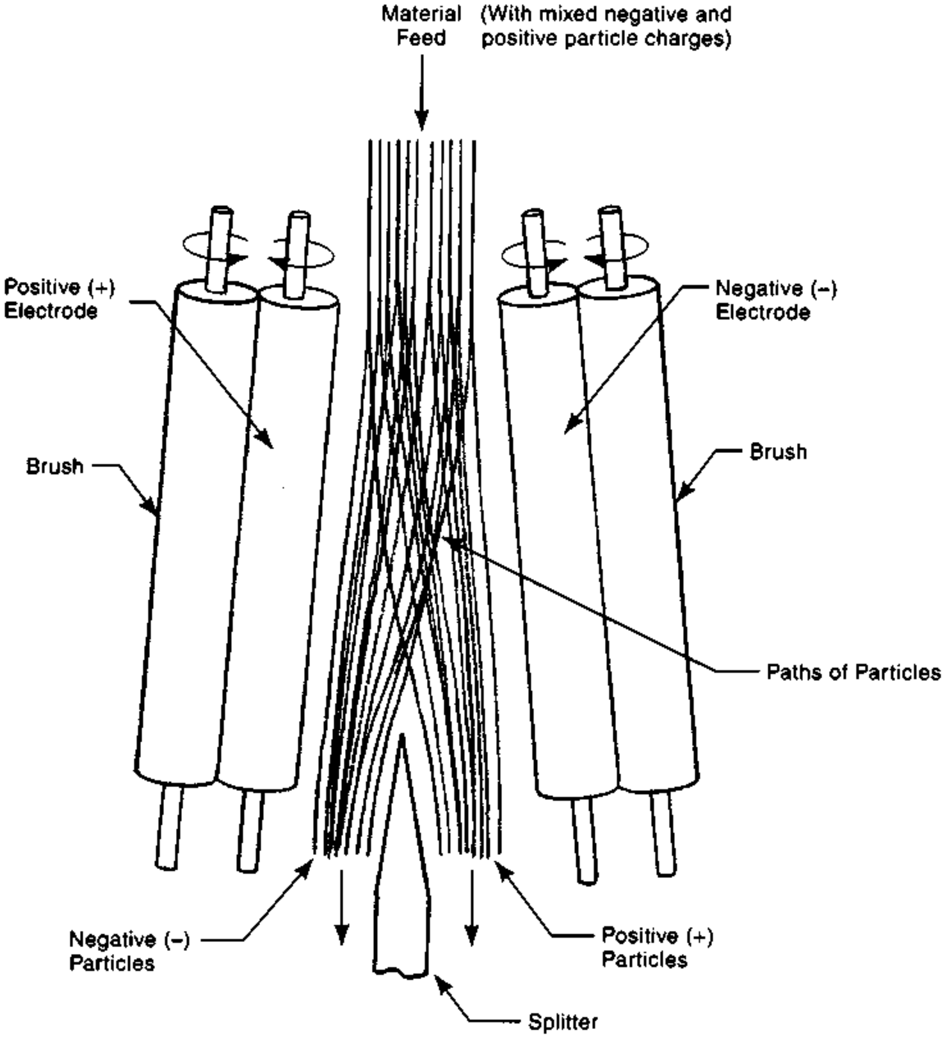

Fig. 11C8e Electrostatic separation of non-conductive materials.

In *electrostatic precipitation*[4], solid particles are removed from gas streams electrostatically. In one method, the gas travels upward inside a vertical tube. A wire, suspended in the center of the tube is charged with a direct current potential of from 10 to 100 KV. This results in a small corona discharge in the area surrounding the wire. Particles suspended in the gas stream are charged by the corona and tend to flow toward the tubing wall. If the particles are liquid, they usually drip downward and are collected at the bottom of the tube. If the particles are solid, they may have to be scraped periodically from the tube walls, or loosened by vibration so that they fall to the bottom of the tube.

Electrostatic precipitation is used to remove smoke particles from exhaust gases, contaminating materials from chemical process plant gases, impurities from heating or air-conditioning air in buildings, acid fumes from chemical plants and petroleum refineries, and to recover tin, copper, and other metal oxides or other materials of value from exhaust gases.

C9. ***adsorption and ion exchange*** - are processes wherein molecules of gas, liquid or a solute, on contact with the surface of a solid with which they have an affinity, adhere to that surface. This effect can be harnessed as a means to separate mixed materials. (The molecules that adhere are referred to as the *adsorbate;* the material they adhere to is referred to as the *adsorbent.*) Examples of adsorption are the bonding of molecules of a reactant material to the surface of a catalyst, and the bonding of molecules of a contaminant in a gas or liquid to the surface of activated charcoal. The movement of charged electrons to a charged anode is another example, as is the segregation of surfactant molecules at the surface of a liquid. The principle is used in vacuum pumps that remove molecules from materials in the gas phase, and is an important factor in adhesion and lubrication. In the production of helium, adsorption is used to purify the gas to high levels. Adsorption is also used as a means of recovery of solvents used in painting, printing, and other industrial operations. Sulfurous gases and other pollutants or odorous compounds are removed from air in buildings by adsorption. In petroleum processing, it removes heavy materials from gases. The use of activated charcoal in military and industrial gas masks is another important adsorption application. *Adsorption* differs from *absorption* in that the molecules are not sucked up in bulk to fill the pores of another material, but only coat its surface in an extremely thin layer. The amount of gas or liquid material adsorbed is small. To offset this limitation, adsorbents are usually highly-porous solid materials with very large surface areas per unit of volume. They are natural or synthetic materials with a microcrystalline or amorphous structure. Activated carbon is the most common adsorbent. Others are molecular sieves, silica gel and activated alumina[5], polymeric adsorbents and zeolites[2]. Adsorption is used to dry compressed air by passing it through calcium chloride and, in the household, when baking soda or charcoal are placed in a refrigerator to remove unwanted odors[9].

A common method of carrying out adsorption is with fixed-bed adsorbers[8]. The adsorbent is placed in a bed 1 to 4 ft (0.3 to 1.2 m) thick that is supported by a perforated plate or heavy screen, inside a container. The feed gas is fed from above the bed and passes through it. The cleaned gas exits the container at the bottom. Periodically the operation is stopped and the adsorbent is regenerated with hot inert gas or steam. Dual containers of this type are normally used together, so the operation can proceed in one container while the other is undergoing regeneration of the adsorbent. The removal of absorbed molecules from the surface of the adsorbent is called *desorption*. Energy is required to effect desorption, hence the use of hot gas or steam. The adsorbent is cooled before reuse.

Other adsorption applications include: drying of gases and liquids, separation of carbon dioxide-methane, carbon monoxide-hydrogen, fructose-glucose, xylene-cresol, and olefin-paraffin mixtures, the production of ammonia synthesis gas, ozone enrichment, water purification with carbon, and the purification and recovery of enzymes, antibiotics, proteins, and vitamins[2].

In the *Ion exchange* process, solid material containing exchangeable cations or anions is brought into contact with an electrolyte solution in order to change the composition of the solution[8]. The process usually uses a solid polymer, either as a porous solid or a gel that dissolves some fluid-phase solvent[5]. Ions in the fluid being processed (usually an aqueous solution), replace other ions in the solid that are dissimilar but that have the same charge[5]. The process is used in water softening and demineralization.

In softening, sodium ions in the water are exchanged for calcium ions. In demineralization, both cations and anions are removed. The process also is used for obtaining metals from dilute solutions[8].

C10. ***electrolytic processes (electrolysis)*** - use a direct electrical current in a conductive liquid - an electrolyte - to bring about a chemical change in the components of the liquid. The process is carried out in an electrolytic cell that contains a chemical solution that has both negatively- and positively-charged ions. Positive and negative electrodes are immersed in the solution and are connected to a source of direct current. The current flows from the negative electrode (cathode) through the solution to the positive electrode (anode). The negatively-charged components of the solution are attracted to the anode and the positively-charged components are attracted to the cathode of the cell. When they contact the anode, the negatively-charged components give up their electrons and are reduced to a neutral element or molecule. The process can also be used to transform a substance in an electrode, when it gives up its electrons. Electrolysis is the basis of electroplating, described in section 8C1, electro polishing (8B3) and electroforming (2L2). In the chemical and metals industries, electrolysis is used for *electrowinning* (K1c1 below), the extraction of metals from ores, or *electrorefining* (K1c2 below), the purification of metals. Also see *aluminum* and *magnesium*, which are produced by electrowinning the molten salts of these metals. Other uses of electrolysis are the production of sodium and chlorine gas from fused sodium chloride (salt), sodium chlorate from a treated salt brine, chlorine and hydrogen from hydrochloric acid, oxygen and hydrogen from water, caustic soda and chlorine from salt brine and the refining of copper, nickel, cobalt, lead, tin and zinc. Fluorine, peroxysulfate and permanganate are other products made with this process[4].

C11. ***electro thermal processes***[4] - are simply processes that require extremely high heat levels, higher than those attainable from furnaces heated by combustion. Combustion furnaces are limited to about 3100°F (1700°C). Furnaces heated by electric methods, however, are capable of temperatures up to about 8100° F (4500°C). There are four types of electric furnaces: arc, induction, resistance and plasma.

Arc furnaces obtain their heat from an electric arc that passes between two or more carbon or graphite electrodes or between electrodes and the material charged in the furnace. The electrodes may or may not be consumed by the process. Arc furnaces are used extensively in steel production and alloy processing.

Induction furnaces rely on resistance to the electrical eddy currents set up in a conductive object that is exposed to an alternating magnetic field. Water-cooled copper coils surround the object or material to be heated. An electrical alternating current with a frequency of 60 to 500,000 Hz is passed through the coil, inducing eddy currents in the material surrounded by the coil. Commercial induction furnaces usually operate at frequencies below 6000 Hz. Resistance to these currents develops the necessary heat in the material. The principle is the same as that used in induction welding and brazing. Induction heating is also used in steel making and alloy processing.

Resistance furnaces use the electrical resistance of the material to be heated, or of another material to provide the necessary heat. The current, in this case, is due to direct connections rather than induction. When the material to be heated supplies the resistance to the current, the furnace is described as *direct-heated*. When another material is used to provide the resistance, the furnace is *indirect-heated*. Resistance furnaces are used to produce silicon carbide and graphite electrodes.

Plasma arc furnaces use an electric arc, but a gas is passed through the arc to generate the plasma. The heat of the arc ionizes the gas, which then passes to the chamber where the electrothermal process takes place. Constrictions in the flow nozzle of the gas cause it to develop temperatures even higher than that of the arc. Almost any gas can be used. The principle is the same as that used in plasma-arc welding (7C1f).

Arc and resistance methods are the most common electrothermal heating processes. They are used in the reduction of tungsten, molybdenum, and other ores in a hydrogen gas environment and in production of phosphors.

C12. ***drying*** - usually refers to the removal of small amounts of water or other liquid from solid, or nearly solid, material. (The removal of moisture from liquids is usually classified as distillation and the drying of gases as adsorption.) There are many drying methods, depending primarily on the form and nature of the material to be dried which may be in paste, granular, bulk, sheet, or fiber form. Both batch and continuous methods are used. Batch dryers have lower capacities and longer drying cycles. Heat is applied to the material to be dried by one of several methods, vaporizing the liquid in it or on it and carrying away the vapor. The following heating methods may be used: 1) direct application, - the most common method - when hot air or other gas contacts the wet solid, 2) indirect application, in contact dryers or conduction dryers, where the heat is transferred to the wet solid through a tube or wall that is impervious to the hot fluid, usually condensing steam, 3) by infrared radiation from electric lamps, resistance elements, or flame-heated ceramic elements, 4) by dielectric effects when the wet solid is placed in a high frequency electric field. However, dielectric heating is not widely used industrially. Many drying processes provide drying energy from a combination of both conduction and radiation from one heating source. The material to be dried may be turned over or agitated during the drying cycle to provide uniformity of heat transfer. Drying is a very common operation in the chemical industries. In addition to its use for chemicals in process, it is employed in the manufacture or processing of minerals, wood, biological materials, detergents, and waste materials. Drying is frequently the last step in the production of crystalline powders, and other products including foods and pharmaceuticals.

Cabinet, tray or compartment dryers are used when production quantities are suitable for batch methods and the material is in powder, granular, crystalline, or paste form, or is otherwise suitable for loading on trays or other containers that can be placed in a drying compartment. Dye materials and other high-value materials may be dried with this method. Foodstuffs, yarns and other textile materials are also processed. The drying compartments are normally well insulated and equipped with slots for trays, a heating device and fans or blowers for circulating the heated air. Baffles or vanes may be included to direct the heated air to all material in the chamber at a suitable velocity. A vacuum may be applied to provide more rapid drying, but normally is used when it is necessary to limit the drying temperature in order to avoid damage to the material being processed. A vacuum is also used when the material must be kept from contact with air, or when the liquid removed is worth salvaging. Pharmaceutical materials are sometimes dried in vacuum compartments. Other dryers use agitation to expose the feed material to the source of heat. Some drying equipment of this type use steam jackets around the compartment as the source of heat. Equipment with agitators is used when the material is sticky and not as easy to handle as the loose material that is dried with a tray system. Fig. 12H (Chapter 12) illustrates a cabinet/tray/compartment dryer.

Other batch systems use ovens or other drying chambers into which the material or component to be dried is placed. Racks, hangers, movable trucks, and other holding and handling devices may be used. Lumber, painted parts, textile skeins, and hides are materials dried with this kind of arrangement.

Tunnel dryers are used instead of compartment dryers when the quantity of material to be dried is large enough to justify continuous processing. Tunnel dryers use conveyors or truck carriers to move the material through a long, heated tunnel or enclosure. This approach is common when the material must be dried slowly, and when it is bulky. Bricks, ceramics, textile skeins, hides, and lumber are often dried with this approach.

Granular, flaky, and fibrous solids are processed in tunnel dryers with mesh conveyors that allow heated air to pass through the conveyor and upward through the material as it is conveyed through the tunnel. Drying rates with these conveying-screen dryers are faster than with batch compartment dryers because the material can make contact with a greater flow of heated air. The principle is illustrated in Fig. 11C12. Materials processed in these dryers include: cotton and rayon fibers, silica gel, cellulose acetate, starch, pigments, insecticides, dyes and calcium carbonate[4].

Rotary dryers are used for bulk materials that are sufficiently dry so that they can be fed into the device. The dryer consists of a cylindrical shell that rotates on its axis and is set at a slight angle to horizontal. Material is fed into the higher end and discharged, after drying, at the lower end. Fig. 11C12-1 shows such a dryer. Flights mounted on the internal walls of the cylindrical shell help distribute the material so that all of it contacts the heat.

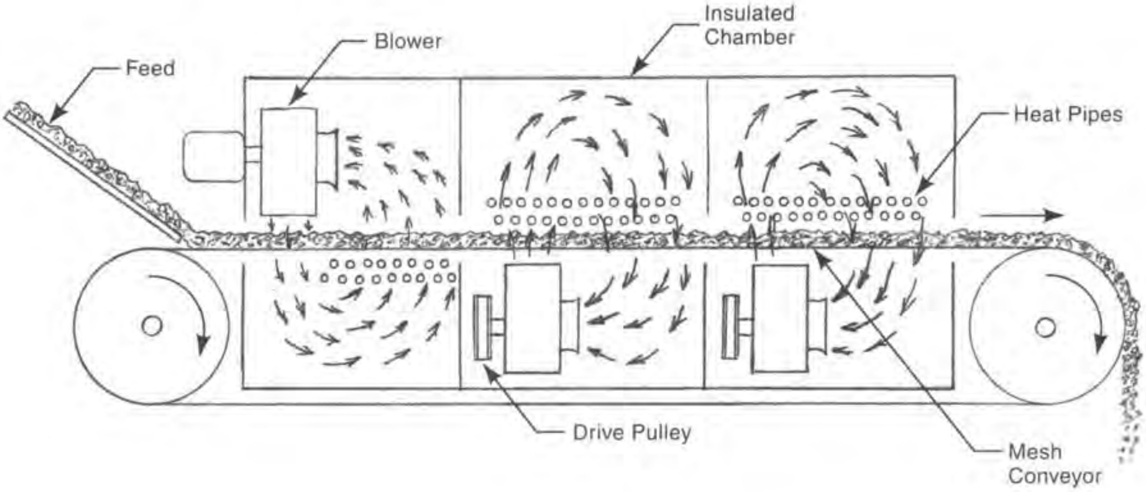

Fig. 11C12 The principal of conveying screen dryers.

Heated air is fed into the shell, usually from the discharge end, to provide drying action. Additional heat may be applied externally to raise the temperature of the shell walls.

Pneumatic-conveyor flash dryers (dispersion dryers) use a high-velocity stream of hot gas to both convey and dry granular, free-flowing, solid materials. Coal, sludges, sodium chloride, filter cakes (broken up beforehand) and whey, are dried with this method. The gas temperature may be as high as 1400°F (760°C) because the material is only briefly in contact with it. Some dried material is often recycled with feed material to help keep it dispersed.

Turbo dryers have vertically-oriented cylindrical or polygonal containers within which a series of horizontal trays slowly rotate. Heated air enters from the bottom and flows upward around a series of baffles, past finned reheaters, and over each tray. Material enters from the top and falls downward onto the upper trays. A series of scrapers and levelers maintain a thin layer of material on each tray and push the

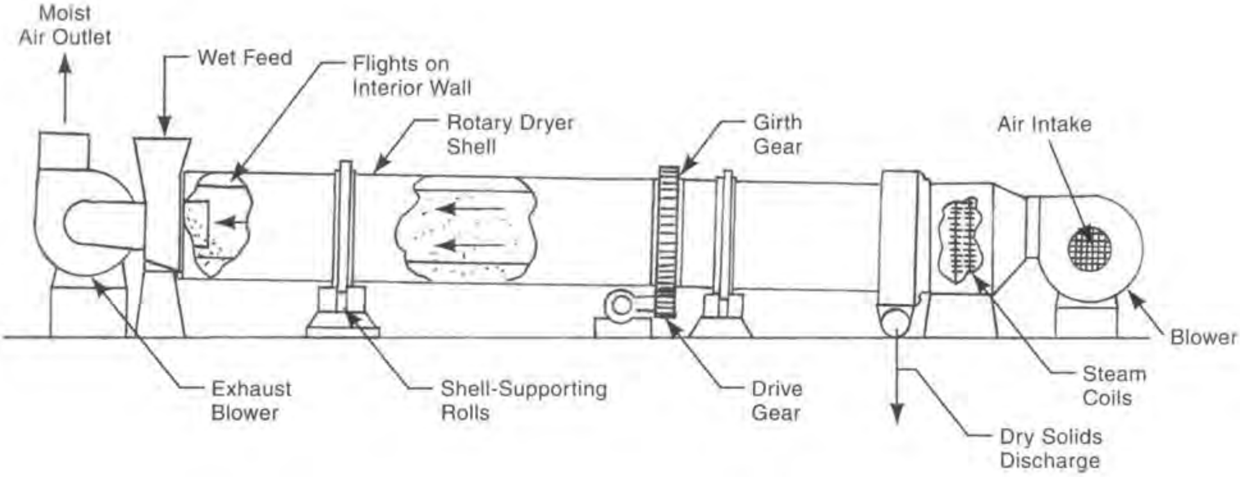

Fig. 11C12-1 A rotary dryer with countercurrent heated-air flow. Wet material is fed to the upper end and is discharged, after drying, at the lower end. Heated air, to provide drying action, is fed from the lower end.

material to openings where it falls to the next lower tray level. Gradually, the material progresses to the bottom of the container and by that time, it is dry. Turbo dryers are used for fragile materials.

Fluidized bed dryers are sometimes used with particulate material. Hot gases are introduced at the bottom of a vertically oriented cylindrical vessel. Material to be dried is introduced at the top. Drying gas flow is sufficient to keep the material fluidized and drying is usually quite rapid. Dried material is removed from the bottom of the cylinder, and drying gas exits from the top. If necessary, a dust collector may be incorporated in the equipment to remove fine particles of material from the drying gas. Fig. 12H4 (in Chapter 12) illustrates continuous fluidized bed drying of foodstuffs.

The *double-drum dryer* shown in Fig. 11C12-2 is used to dry liquid material to the solid state. The liquid - solution, slurry, or paste - is fed to a pool in the space between the heated metal drums. A thin wet film adheres to each drum's surface. As the drums slowly revolve, the film dries and the dried material is scraped off by doctor blades. It falls to a conveyor below. The material is on the heated drum surface for only a short time so there is little chance of overheating.

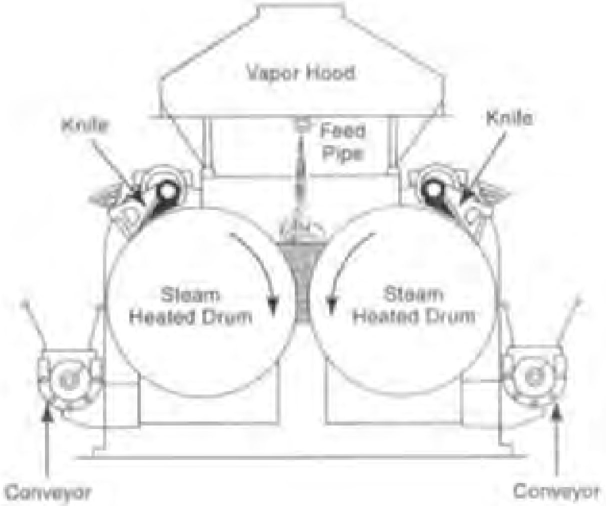

Fig. 11C12-2 A double-drum dryer with center feed of liquid material. Doctor knife blades scrape the dried material from the drum surfaces. (*Courtesy Buffalo Technologies Corp.*)

Vacuum rotary dryers are used for large batches of materials that must be dried in the absence of air or where the solvent is to be recovered. The material is placed in a horizontal cylindrical chamber that

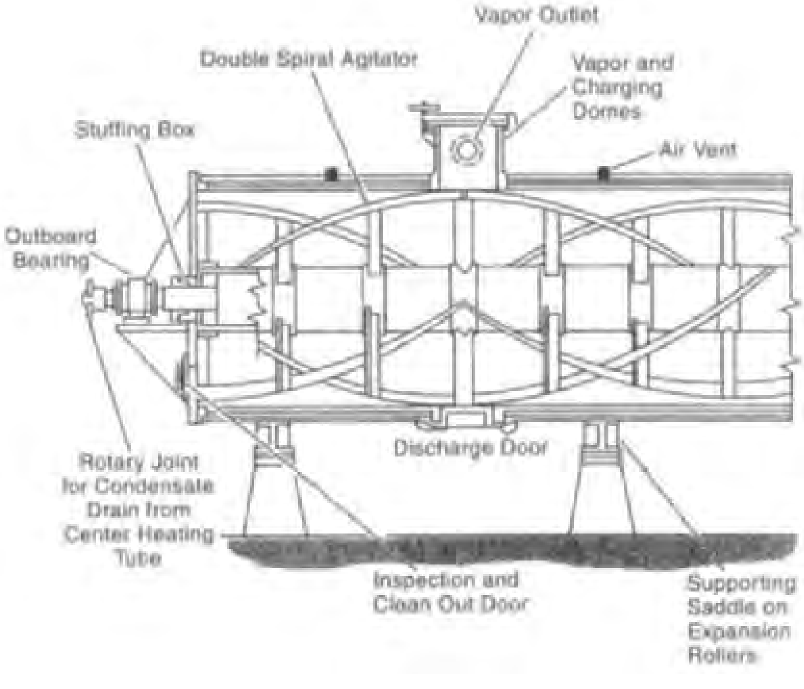

Fig. 11C12-3 A typical vacuum rotary dryer. (*Courtesy Buffalo Technologies Corp.*)

rotates during the operation. Spiral blades in the chamber agitate the material to be dried. Heating comes from steam, hot water or other medium circulating in a jacket surrounding the chamber. Fig. 11C12-3 illustrates this type of equipment.

Pressing and centrifuging are two other methods, not involving thermal vaporization, that are used in drying or partially drying materials.

C12a. ***spray drying liquid materials*** - Liquid materials, including suspensions of small solid particles, can be sprayed with very fine droplets into a stream of hot air or hot gas (up to 1400°F – 760°C). In some devices, the hot air is introduced tangentially into a vertical cylindrical container, and circulates in the container in a spiral direction. The liquid is sprayed into that container where it contacts the hot air. The liquid evaporates and dried particles fall to the bottom of the container. In one arrangement, the hot air enters at the bottom of the container and the excess escapes upward and through a central discharge duct at the top. Small particles may escape with the hot air discharge and are separated by cyclones or bag filters. Other equipment designs use different arrangements for the input, flow and exit of material and hot gas. In many designs, the dried particles and hot gas both exit from the bottom of the container. Water solutions and slurries are commonly spray dried. One of three atomization methods is used to create the spray, depending on the nature of the liquid. Hydraulic pressure or air atomization are used for lower viscosity liquids and a spinning disc is used for viscous liquids. However, slurries or thick liquids above about 1500 centipoises do not atomize well. Spray drying is rapid. Typical drying times are a matter of seconds. Another advantage is that the dried material tends to form spherical granules of uniform size. The method has become widely used. Major applications are the drying of foodstuffs: milk and milk products, coffee extract, and fruit juices. Certain chemical catalysts are also processed by spray drying. Fig. 11C12a shows two arrangements of spray dryers.

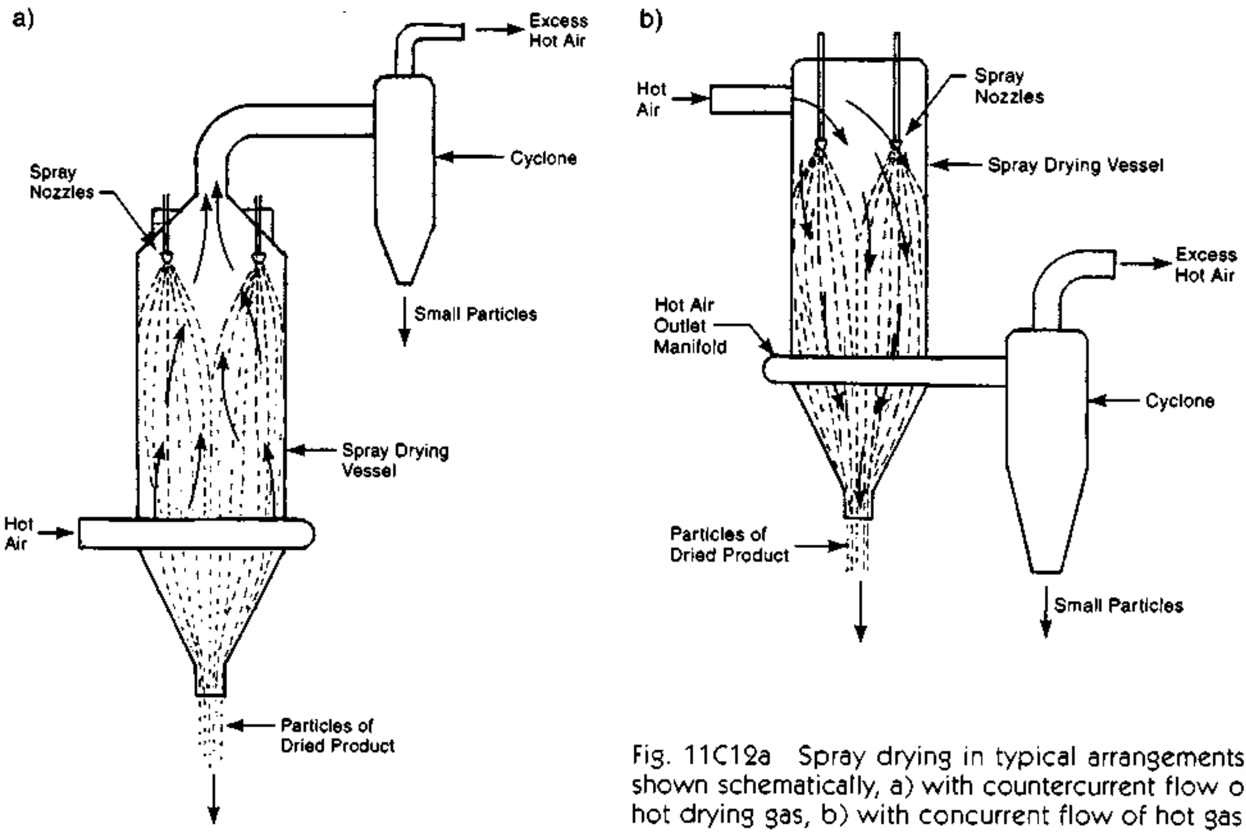

Fig. 11C12a Spray drying in typical arrangements, shown schematically, a) with countercurrent flow of hot drying gas, b) with concurrent flow of hot gas.

Infrared radiation from heat lamps is another method for drying liquids. Its major application is drying paint after it has been sprayed, but this use is limited to thin films.

C12b. ***freeze drying*** - is used with heat sensitive materials such as some foods, vitamins and pharmaceuticals. It is described in 12H5.

D. Size Reduction

Reductions in size of pieces or particles of solid materials is required with many ores, coal, stone, slag, concrete aggregate, clays, kaolins, carbonates and sulfates, mica, agricultural grains, and vegetables. Size reduction occurs in the manufacture of refractory brick, pigments, various other chemicals, soap, fertilizer, Portland cement, flour, cereals and other foods, vegetable by-products, starch, various metals, and the processing of waste materials. It may be done to facilitate a chemical reaction, or some physical operation such as the separation of materials, to facilitate handling or measurement or to put a material in a form needed by customers. Pulverizing to a fine powder requires size reduction in several steps. Size reduction can be classified in three or more stages: 1) primary crushing—12 to 27 in (0.3 to 0.7 m) pieces reduced to 4 to 9 in (10 to 23 cm), 2) secondary crushing—4 to 9 in (10 to 23 cm) reduced to $^1/_2$ to 1 in (13 to 25 mm) in one or two stages, 3) pulverizing—$^1/_2$ to 1 in (13 to 25 mm) reduced to 60 – 325 mesh[4]. Table 11D summarizes this classification and indicates typical size reduction methods for each stage. Some methods suitable for one of the stages may be suitable for another stage, but no method is suitable for all stages. Size reduction methods can also be classified by the means used. The three most common methods are: crushing, impact, and attrition (rubbing). Cutting is also sometimes used. Size and hardness of the feed pieces are important factors in the choice of method.

D1. ***crushing*** - is most often effected by a slow application of strong force. A *jaw crusher* has a swinging plate or "jaw" which is connected to a double toggle that is moved by an eccentric on a large flywheel. Each forward movement of the jaw exerts heavy pressure on the material between the jaws and breaks up the large pieces. Crushed pieces fall between the jaws. Large lumps may be hit several times as they work their way down and out of the machine. See Fig. 11D1. *Gyratory crushers* use a cone-shaped pestle that moves eccentrically in a bowl-shaped hopper. Crushed pieces fall to the bottom and exit through the hopper. A gyratory crusher is illustrated in Fig. 11D1-1. These machines are widely used in the first-step crushing of rock materials. Both jaw and gyratory crushers - of an appropriate size - may be used for primary and secondary crushing. Gyratory crushers with wide-angle cone-shaped pestles are often called *cone crushers.* Cone crushers are used more for secondary crushing. Roll crushers, described below, are also primarily used for secondary crushing, except with coal and other friable materials.

Table 11D Size Reduction Classifications and the Common Methods Used

Classification	Feed stock size	Product Size	Reduction ratio	Method Used
Primary crushing	12 to 27 in. (30 to 69 cm.)	4 to 9 in. (10 to 23 cm)	3:1	Jaw, gyratory and cone crushing
Secondary crushing 1 or 2 stages	4 to 9 in. (10 to 23 cm.)	$^1/_2$ to 1 in (13 to 25 mm.)	9:1	Hammer mill, jaw, gyratory, cone, smooth roll and toothed rolls
Pulverizing	$^1/_2$ to 1 in	60 to 325 mesh	60:1	Ball and tube, rod, hammer, attrition, ball race and roller mills

This table is based on data from the McGraw-Hill Encyclopedia of Science and Technology, 8th ed., 1997, McGraw-Hill, New York.

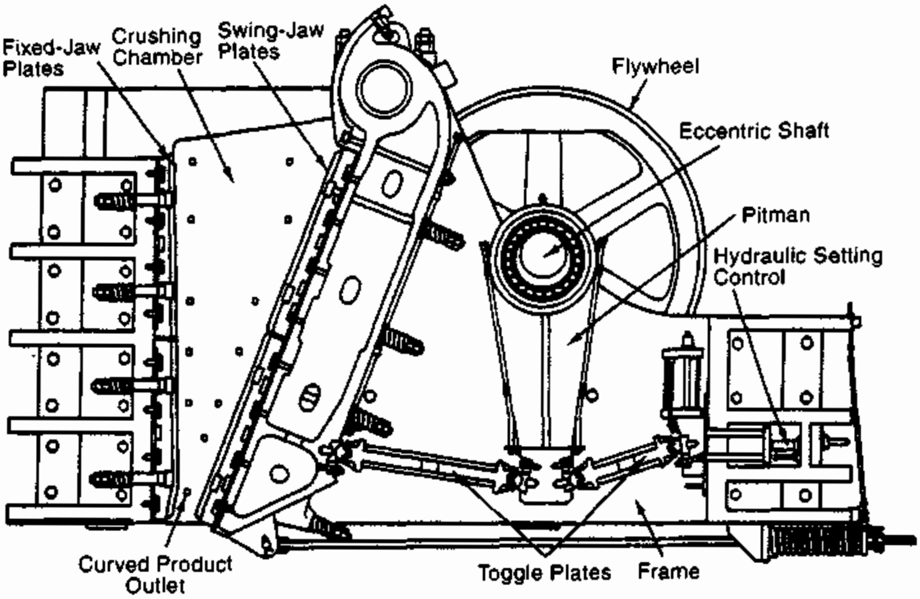

Fig. 11D1 A Blake-type jaw crusher. (*Courtesy Metso Minerals OY.*)

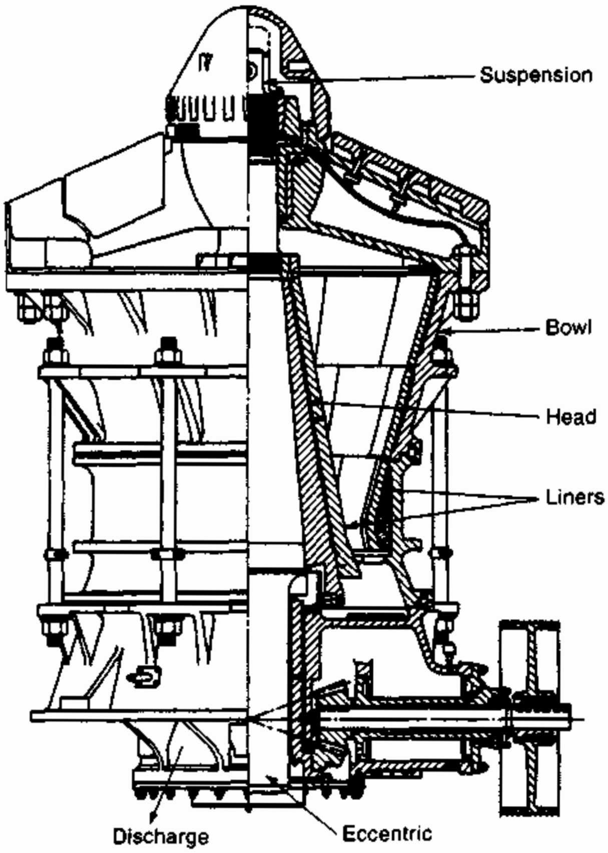

Fig. 11D1-1 A gyratory crusher. (*Courtesy Metso Minerals OY.*)

D2. ***secondary crushing*** - is performed with roller mills (roll crushers) and hammer mills, as well as jaw, gyratory, and cone crushers, engineered for secondary crushing. Secondary crushing follows primary crushing that is normally performed with jaw or gyratory machines.

Roll crushers have either one or two rolls, sometimes with teeth. Material to be crushed moves by gravity, either between the two parallel rolls or between a single roll and the hopper wall. The rolls may be smooth, corrugated, or toothed. Toothed rolls are used for crushing coal, smooth rolls for rock and ore. Toothed-roll crushers can handle a variety of materials and sizes except very hard materials. Fig. 11D2 illustrates a typical roll crusher.

Fig. 11D2-1 illustrates the principle of *impact or hammer milling*. In this machine, hammers mounted on a rotating spindle strike pieces of feed material as they are fed into the hopper. Impact forces rather than crushing forces cause the pieces to break. The broken pieces fall through an opening or a series of openings in the hopper bottom; larger pieces are struck again by the hammers until they break. This kind of equipment is used commonly to crush coal and limestone, but can reduce the piece size of many materials including pastes and clay, tree bark, leather, steel machining chips and hard rock[8].

D3. ***pulverizing*** - is carried out by both impact (rapid blows against the pieces to be pulverized)

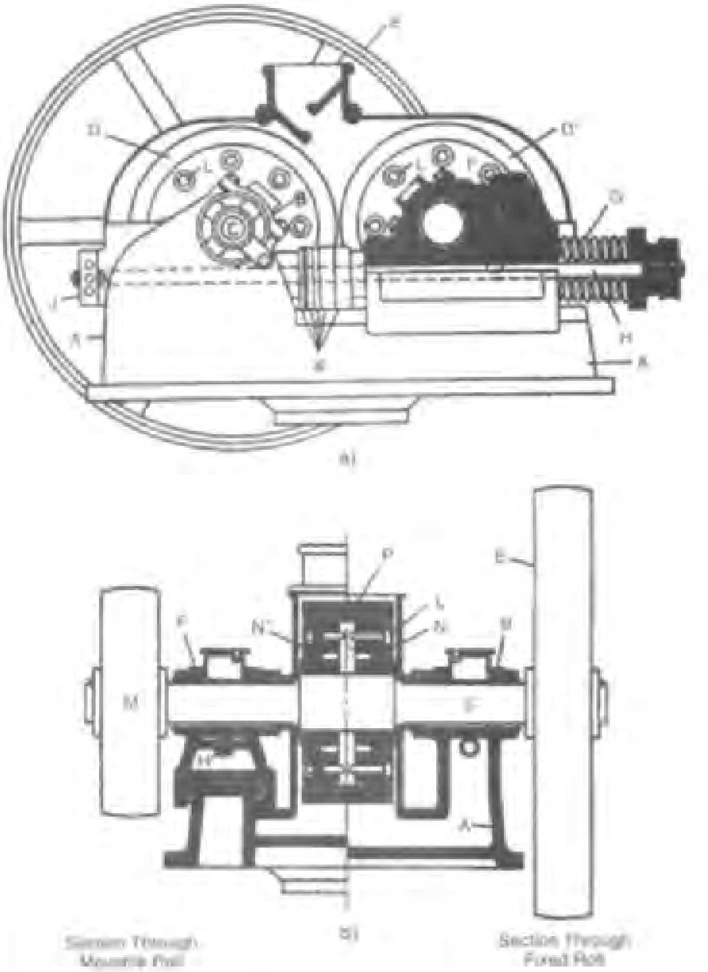

Fig. 11D2 A typical roll crusher: a), elevation view, b), section view. A, frame; B, fixed bearing; C, fixed-roll shaft; D, fixed roll; D', movable roll; E, main drive pulley; F, movable bearing; G, spring; H, tie rod; J, adjusting nut; K, shims; L, tie bolts; M, movable-roll drive pulley; N, N', main roll castings: P, roll tire. (*by permission, from Introduction to Chemical Engineering, W. L. Badger and J. T. Banchero, McGraw-Hill.*)

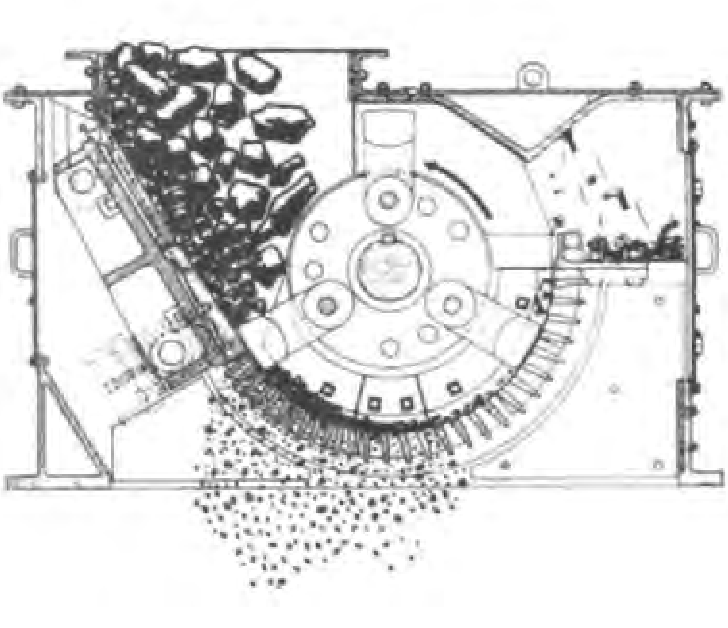

Fig. 11D2-1 A hammer mill (impact mill). Size reduction results primarily from impact but there is also some attrition (rubbing action) of pieces that do not fall through the grating bars. (*Courtesy Pennsylvania Crusher Corp.*)

and attrition (abrasive or rubbing action). Crushing forces are also employed. *Hammer mills, ball mills, rod mills, tube mills, ball race,* and *roller pulverizers* are all used. In some pulverizers, the material passes through the equipment once with no removal of pulverized material during the operation. These machines are called open-circuit pulverizers. In closed-circuit pulverizers, the processed material is conveyed to a classifier and oversize pieces are returned to the pulverizer for reprocessing. Fig. 11D3 illustrates a *ball-tube mill*, sometimes called a *tumbling mill*, with three stages of pulverization. The machine shown is an open-circuit pulverizer. As the tube rotates, the balls and material tumble, and the balls impact the pieces of material, breaking up and abrading them. Similar equipment, with single-stages and short cylinders, are called *ball mills*. Sometimes steel rods are used instead of balls and the machines are called *rod mills*. Sometimes, when steel would contaminate the material, quartz balls and cylinder liners are used. In some applications, notably cement making and some ore processing, water is added to the feed. The finished material exits the machine as a slurry[4].

Roller pulverizers use rolls bearing against a surface to crush and pulverize material. Centrifugal effect, or spring pressure, provides the necessary force when the rollers roll along the walls of a cylindrical vessel. Such machines are sometimes called *centrifugal grinders*. *Roller mills* use pairs of cylindrical rollers rotating toward each other but at different speeds so that material placed between the rolls experiences a shearing action. This kind of equipment is used to grind grain into flour. Other pulverizers use a series of steel balls, rolling in a circular raceway, to pulverize by crushing and attrition. Spring pressure provides the necessary force. Pulverized material discharges from the circumference of the circular raceway. A *ball-and-race pulverizer* is illustrated in Fig. 11D3-1. Cement rock is pulverized with such equipment. *Pan crushers*, similar to the muller illustrated in Fig. 1B6a (in Chapter 1) for the processing of foundry sand, are also used to reduce particle size for medium-hard and softer materials such as clays, shales, cinders, and barites[5]. *Stirred media mills* use balls, stones, or sand, as media with the material to be pulverized. Such mills have a central paddle wheel or an

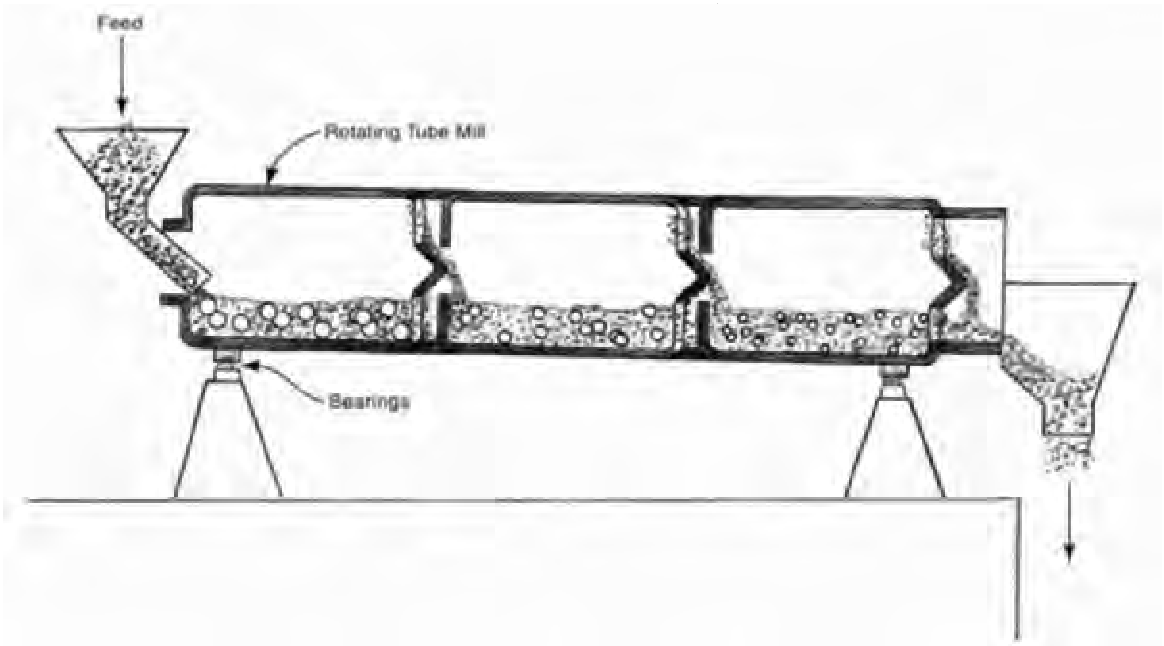

Fig. 11D3 A tube mill pulverizer with three compartments, each containing balls of a different size. As the tube rotates, the balls strike the material and break it into small particles. The material feeds progressively through the three compartments.

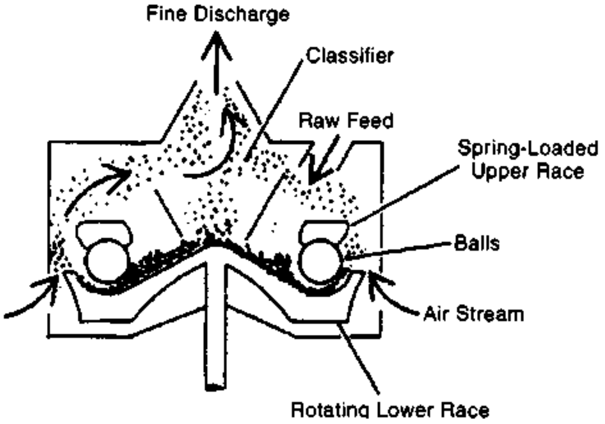

Fig. 11D3-1 A ball and race pulverizer. Coarse raw material is ground by crushing and attrition between balls and races. The air stream conveys the ground material to the discharge port. (*From the McGraw-Hill Encyclopedia of Science and Technology, 1998, New York. Reproduced with permission of McGraw-Hill.*)

armature with discs to stir the media and material, usually as a wet slurry. *Vibratory mills*, with media, are also used to pulverize material. They are primarily used, in a dry state, to mill hard materials[5].

E. Size Enlargement

Several methods are used to gather small particles into larger masses. The operation takes place in some chemical processes to improve handling, prevent dust, and improve processibility. When particles are caused to adhere together, the process is termed *agglomeration*. There are two basic methods for achieving agglomeration: 1) *agitation methods*, which move or circulate the particles in the feed mixture so that they come in contact with one another and adhere. Adherence may result from molecular, electrostatic, or mechanical interlocking[5]. There are several agitation methods: fluidized bed, mixing of various types, and tumbling. (Agitation methods may be referred to as *granulation*.), 2) *compression methods*, wherein particles are forced together. In both basic methods, additives may be introduced to the feed mixture to promote the adhesion of particles to one another. Additives include: binders, wetting agents, surfactants, and lubricants. Other additives may be used to provide such properties as color or flavor (with foods and pharmaceuticals) to the agglomerated product. Binders can be solid or liquid. Blending, milling, mixing, drying, and size classification operations may all precede the agglomeration step. Heat also may be applied to aid the adherence of particles, particularly for polymers, or other materials with sufficiently low softening points. Fine iron ore particles are moistened to help them adhere together and then sintered (See 2L1d) to fuse the particles together for further processing.

Compression agglomeration is typified by tablets, pellets, and briquettes, but extrusion and rolling may be used if the need is for continuous lengths of sheet or some cross-sectional shape. Powder metal parts manufacture, as described in section 2L1, is an agglomeration process. For tablet-making and other mass-produced products, the common arrangement uses a turntable machine. As the table rotates, powdered material fills cavities in the table, excess material is wiped off, rams compress the material into tablet form and the tablets are ejected.

F. Fermentation

Fermentation is the decomposition of organic matter in the absence of air or oxygen. It is the result of life processes of microorganisms, yeast, bacteria, or molds. Fermentation is generally accompanied by the evolution of gas. The most notable example is the fermentation of sugar that converts it into alcohol and carbon dioxide. This is the basic operation involved in the manufacture of beer, wine, brandy, and other alcoholic beverages, and in raising bread. It is described in section 12J4 (Chapter 12). Ethanol as a gasoline additive and for other uses is made from fermentation of grain. Lactic acid, butyl alcohol, acetone, synthetic insulin, monosodium glutamate, and acetic acid are made from various bacteria. Mold fermentation is used to produce enzymes, gluconic and citric acids, some antibiotics including penicillin, riboflavin (vitamin B_2) and vitamin B_{12}.

G. Mixing Methods

Mixing methods are employed to provide a homogeneous blend of material and uniform distribution of any added ingredients. Mixing may also take place to disperse heating or cooling, to promote crystallization or dissolution, to create emulsions, and to facilitate chemical reactions. Liquids, loose solids, and gases are likely to undergo mixing operations. A variety of mixing equipment is available and a choice is made, depending on the nature of the material, the purpose of the operation, the quantity to be mixed, and whether the mixing is part of a batch or a continuous process. Mixing gases with gases is the easiest task. Mixing liquids with other liquids or with gases is common, and not quite as straightforward, but is quite feasible. Mixing liquids with solids, if the portion of solids is small, is often carried out with the same equipment used for mixing liquids with liquids. Mixing solids with other solids may present the most difficult mixing problems.

G1. ***mixing gases with gases*** - is seldom difficult and is usually carried out by injecting one of the gases at high speed into a vessel containing the other gas. An impeller (Fig. 11G3) may be used to insure thorough blending.

G2. ***mixing gases with liquids*** - This operation is performed with a number of different methods, depending on the application, the materials involved, and the temperature and pressure that can be used. The gas is injected into a vessel containing the liquid and a mixer. Impellers (Fig. 11G3) or other sparging devices may be used to disperse the bubbles of the injected gas. These devices can include multiple and special nozzles, a series of angled plates in the path of the bubbles, or other

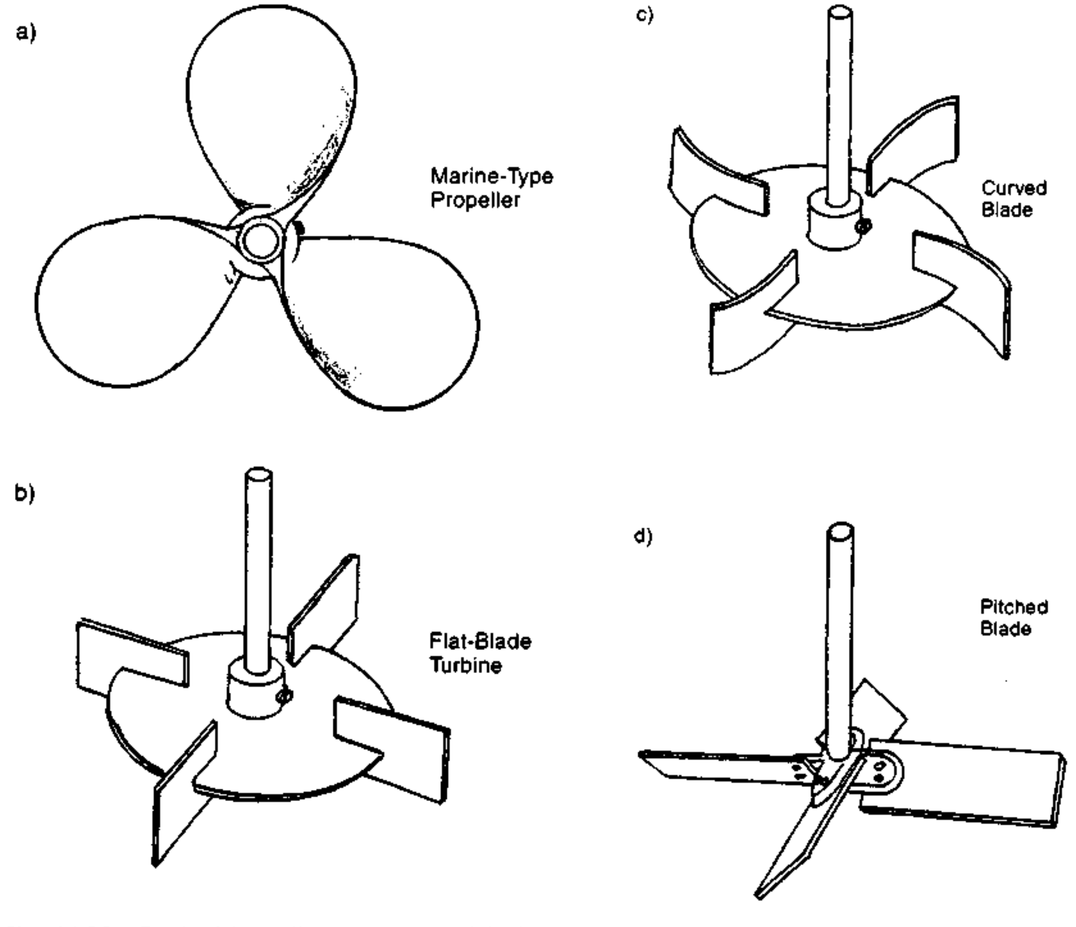

Fig. 11G3 Typical impeller-type mixer blades: a) marine-type propeller, b) flat-blade turbine, c) curved-blade turbine, d) pitched blade turbine.

devices to make the gas bubbles as small as possible, as well as widely dispersed. The objective is to have the largest bubble surface possible per volume of gas introduced to the liquid.

Applications of gas-liquid mixing include operations involving the hydrogenation of oils, aeration of waste water, fermentation operations, the removal of impurities from gases, carbonation of water and the chlorinating, fluoridating or brominating of liquids.

G3. ***mixing liquids with liquids*** - Mixing may be different for immiscible liquids than it is for those that are miscible. Mixing depends on creating turbulence between the two liquids. This can be accomplished with a jet of faster-moving liquid entering a liquid that is stationary or moving slowly. Commonly used are propeller and turbine mixers as illustrated in Fig. 11G3. Turbine blades may be flat or curved as shown in views b) and c). Propellers, such as in a), have become more important. Propeller and flat-turbine mixers include containers with baffles that promote intermixing of the liquids. Baffles are attached to the container walls, except when some solids are to be kept in suspension. In that case, the baffles are spaced a short distance from the container walls. Propeller mixers are sometimes placed at an angle, or off-center in the container. Liquid flow from turbines is radial while that from propellers is axial. Fig. 11G3-1 illustrates these effects.

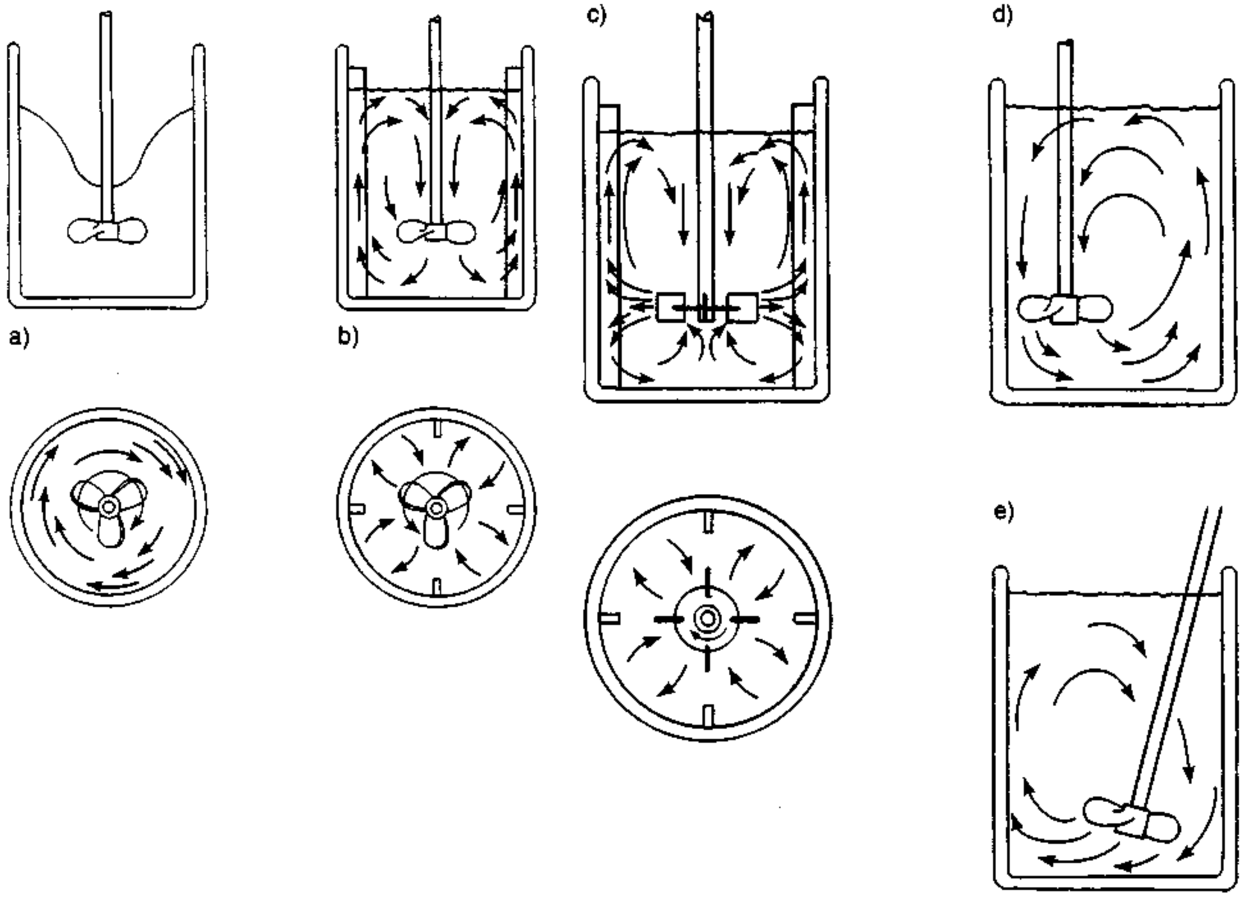

Fig. 11G3-1 Several mixing arrangements for liquids: a) propeller mixer in an unbaffled container, b) the flow of liquids in a baffled container with a propeller mixer, c) the flow of liquids in a baffled container with a turbine mixer, d) a propeller mixer off-center in the mixing container, e) a propeller mixer set at an angle in the mixing container.

Fig. 11G3-2 A ribbon turbine with double spiral, for high-viscosity liquids. *(Reproduced with permission from the McGraw-Hill Encyclopedia of Science and Technology, 1998.)*

High-viscosity liquids require different mixing methods than those used for low-viscosity liquids. Higher-viscosity necessitates more extensive apparatus and greater power to ensure intermixing because of the reduced flow of such liquids. Fig. 11G3-2 shows a ribbon turbine with double spiral mixer used for mixing high-viscosity liquids. Fig. 11G3-3 shows a helical mixer, also used for these materials.

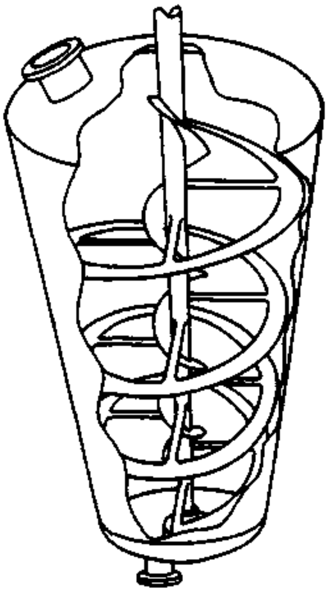

Fig. 11G3-3 A helical mixer for high-viscosity liquids. *(Reproduced with permission from Perry's Chemical Engineering Handbook, R.H. Perry and D.W. Green, McGraw-Hill, 1997.)*

One issue in mixing liquids is that the energy introduced during mixing will increase the temperature of the material. This can be a problem if the material is sensitive or unstable.

G4. ***liquids-solids mixing*** - The mixing method selected depends on the particular materials involved and their proportions in the mixture. Liquid mixing devices with propellers or turbines can be used if the solid material can be suspended in the liquid. Suspension can occur when the particles are not too large and the amount of solids is not too great. Low viscosity of the liquid is also required. When liquids are added to solid materials much of the solids-mixing equipment pictured in Fig. 11G5 can be used. The specific type of equipment used depends on how the solid material is affected by the liquid, and how much liquid is added. Some liquids may add lubricity to the mixture; others may cause caking. Ribbon [Fig. 11G3-2 and Fig. 11G5(e)], screw [Fig. 11G5(f)], rotor, muller [Figs. 11G5(g) and 11G5(h)], Banbury (Fig. 4A4c in Chapter 4) and kneading (Fig. 11G5-2) mixers are most suitable for condition where caking may occur.

G5. ***solids mixing*** - A variety of equipment is available for mixing solid materials. Which device is chosen depends on the nature of the material and the purpose of the operation. Though blending of materials is the most common purpose, mixing operations may be involved in heating, cooling, coating, conveying, polymerizing or reacting[5]. Several types of mixers are illustrated in Fig. 11G5. The tumbling mixers, shown in (a), (b), (c) and (d) are used for gentle blending of abrasive materials and dense powders.[5] Mixers (a) and (b) are adapted to lighter, dry solids. Ribbon mixers, sometimes referred to as dry mixers, are capable of handling a variety of materials from light weight dry powders or granules to materials that are sticky or fibrous. These mixers have a trough with a semi-cylindrical bottom, and a shaft that includes a series of spiral, ribbon-like mixing elements, as well as some straight stick-like elements at an angle to the shaft. The spirals lead in both directions. As the shafts rotate, the material to be mixed is moved back and forth and is intermixed. The mullers shown in (g) and (h) can break apart

Previous Page

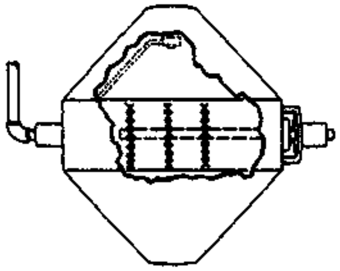

(a) Double Cone

Agglomerate breaking device shown in broken line. Spray nozzle shown in dotted line. Tumblers of this type available plain or with either or both of the above features.

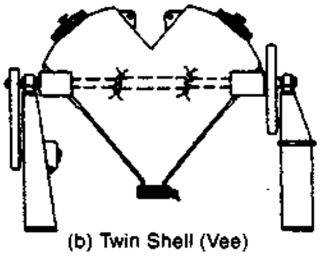

(b) Twin Shell (Vee)

Agglomerate breaking and liquid feeding device shown in broken line. Where no liquid feeding is necessary, a pin-type agglomerate breaking device is used. Tumblers of this type are available plain or with any of the above features.

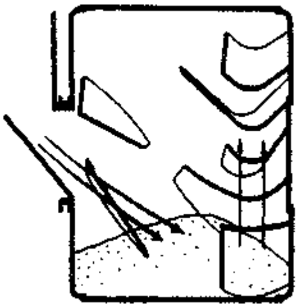

(c) Horizontal Drum
(with baffles)

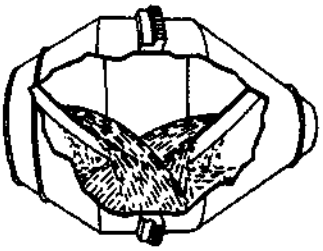

(d) Double-Cone revolving around
long axis (with baffles)

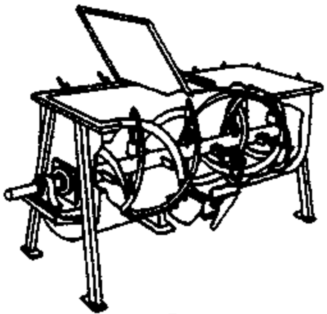

(e) Ribbon

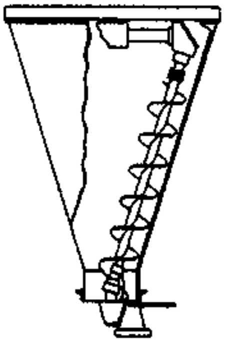

(f) Vertical Screw
(orbiting type)

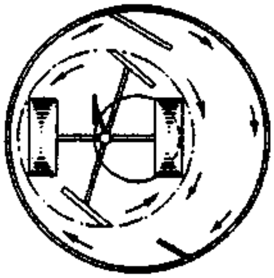

(g) Batch Muller

Three types are available:
(1) pan is stationary and muller turret rotates;
(2) muller turret is stationary and pan rotates;
(3) pan rotates clockwise, muller turret rotates counterclockwise.
Type 3 is illustrated above

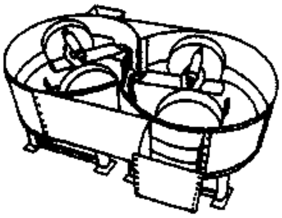

(h) Continuous Muller
(stationary shell)

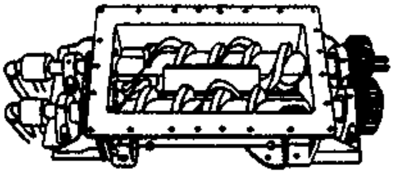

(i) Twin Rotor
(adapted to heat transfer-jacketed
body and hollow screws)

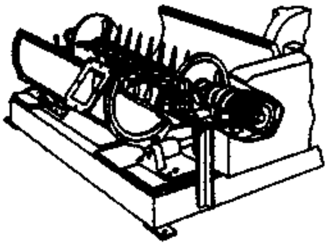

(j) Single Rotor

(k) Turbine

Fig. 11G5 Several types of solids mixing machines. (*Reproduced with permission from Perry's Chemical Engineering Handbook, R.H. Perry and D.W. Green, McGraw-Hill, 1997.*)

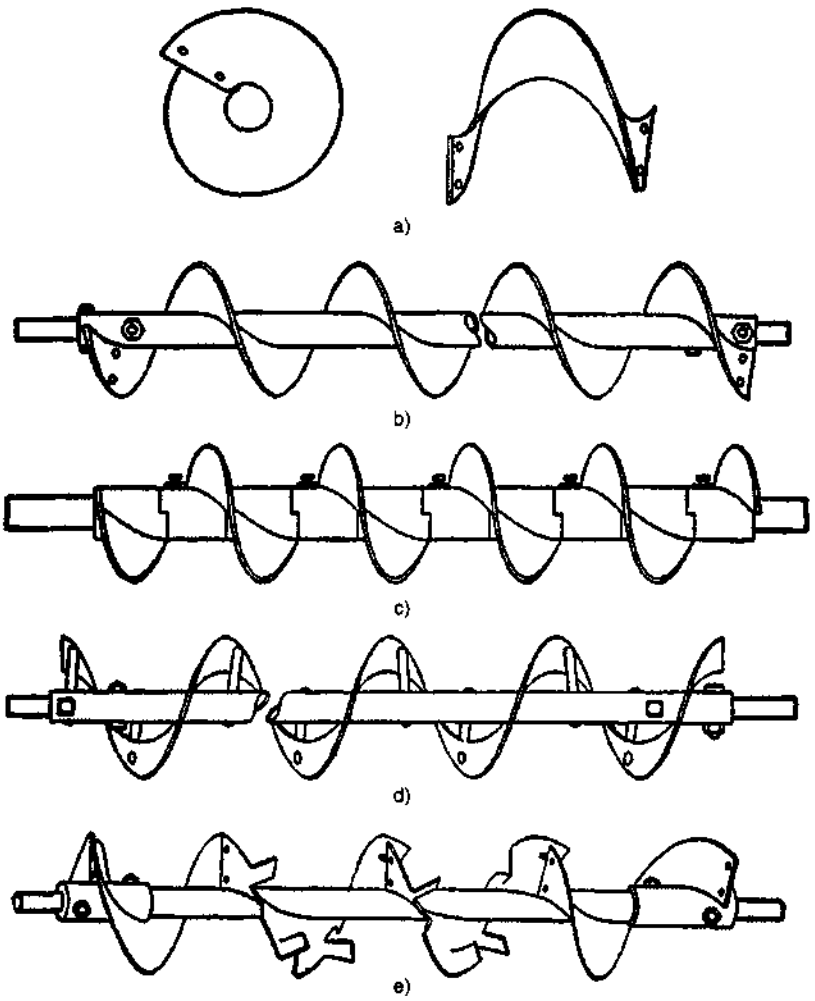

Fig. 11G5-1 Various screw conveyor flights: a) sectional; b), helicoid; c), cast iron; d), ribbon; e), cut flights. (*by permission, from Introduction to Chemical Engineering, W. L. Badger and J. T. Banchero, McGraw-Hill.*)

aggregated material, and make a mixture more dense, but are not so suitable for sticky materials. Foundry sand processing is a common application for these mixers. Turbine mixers, shown in (k) in Fig. 11G5, have a series of legs with plowshares or moldboards that spin through a circular trough. These mixers are suitable for both dry materials that flow well, and lightly-wetted materials that do not flow so well, and also for liquid-solid mixtures[5]. Dry, fine, powder or granules, can also be mixed with screw conveyor-mixers when the material is conveyed. See Fig. 11G5-1. Mixers of the screw type are also incorporated in plastics injection molding and extrusion machines. These machines, illustrated in Chapter 4, are used to mix color concentrates and other additives with the basic plastic resin as part of an extrusion or molding operation.

Stiff, viscous materials are mixed with a kneading machine such as that shown in Fig. 11G5-2. Mixing takes place in an open-top container, with a semi-cylindrical bottom. Two Z-shaped knifes rotate on horizontal shafts in such an orientation that the mass from one knife is picked up and folded by the other knife. As the operation continues, the materials are blended together. The machine pictured also includes a screw conveyor at the bottom of the container. During kneading, the screw conveyor runs in reverse and aids in keeping material within reach of the kneading blades. After mixing is completed, the screw reverses and empties

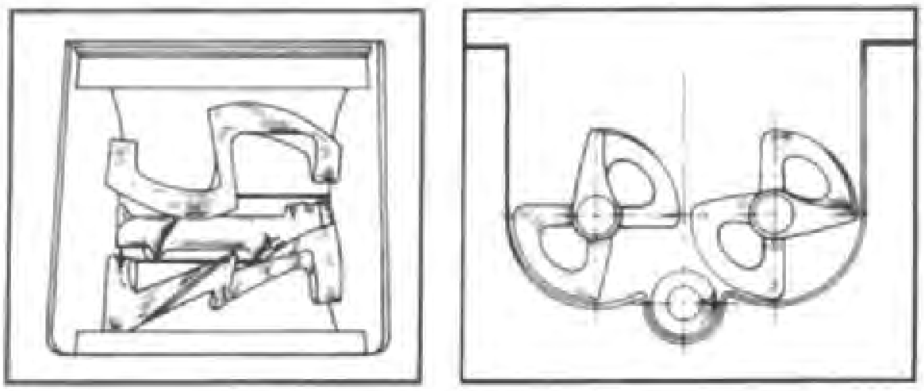

Fig. 11G5-2 A kneading machine with an added extrusion screw. The extrusion screw runs in reverse during the mixing cycle, moving material to the kneading blades. When mixing is completed, the screw changes its direction of rotation and empties the mixing chamber of the mixed material. (*Courtesy Charles Ross and Son Company.*)

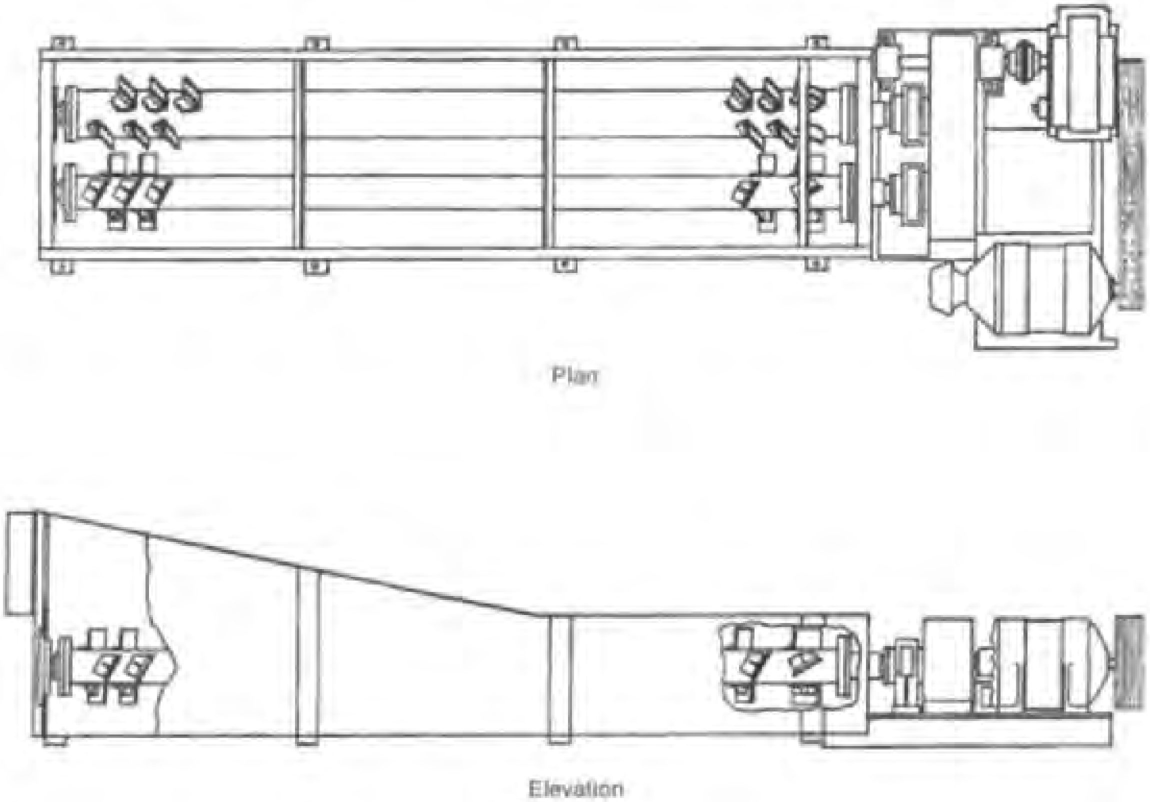

Fig. 11G5-3 A pug mill, used extensively for mixing clay. (*by permission, from Introduction to Chemical Engineering, W. L. Badger and J. T. Banchero, McGraw-Hill*) the machine. Heating or cooling jackets may be incorporated in the container. Kneading machines operate on a batch basis and are common in the mixing of dough for baked goods. The machines are also used to mix polyester and polyurethane plastics, hot melt adhesives, butyl sealants, metal powders and pharmaceuticals.

Banbury mixers have some similarities to kneading mixers and are used in many solid chemical-mixing operations. They are adapted for mixing rubber, plastics, and other cohesive solids and pastes. Banbury mixers are explained and illustrated in paragraph 4A4c in Chapter 4 in connection with the compounding of plastics and rubber. Other plastics compounding methods, including dry propeller mixing, v-barrel mixing, and other methods discussed in section 4A4, are also applicable to chemical materials.

The pug mixer, illustrated in Fig. 11G5-3, has two rotating shafts in a trough-like container. Each shaft carries a series of inclined blades or pins which are placed so that they overlap the blades or pins on the other shaft. Material is passed back and forth as the shafts rotate. This machine is used extensively for mixing clay.

H. Petroleum Refining and Petrochemicals

Petroleum - crude oil - is a mixture of solid, liquid and gaseous hydrocarbons found underground or under the sea bottom in rock deposits. Refining of petroleum can provide many useful materials including: fuels, lubricants, solvents, and petrochemicals used in the manufacture of plastics and other useful products. Refining involves three basic steps: separation, conversion and chemical treatment. Refineries are normally designed for specific crude oils and particular products, but must be flexible to adapt to variations or changes in market demand for particular products and materials.

H1. ***separation*** - is the first step in petroleum refining. It divides the crude oil into constituents, most of which are further processed with different methods that convert them to salable products. The prime method used to separate the various fractions (hydrocarbon groups) in petroleum is *fractional distillation.*

H1a. ***fractional distillation of crude petroleum*** - (See paragraph C1a which discusses fractional distillation in general.) Crude petroleum is first heated to about 250°F (120°C) and treated with fresh water and an electrical field to remove salt. The crude petroleum is then further heated, in heat exchangers and a furnace, to a temperature above the boiling point of most of the fractions it contains, normally between 600 and 725°F (315 and 385°C). The resulting mixture of gases and liquids is passed to a fractionating tower, sometimes called a bubble tower. This is a high, vertical, cylindrical chamber. As the gases rise in this tower, they cool and condense. Condensation takes place at different levels, depending on the condensation temperature of the fraction. The condensates collect in trays attached to the tower walls at different levels, and are piped off to separate storage tanks for further processing. The cylindrical tower may be as high as 150 ft (45 m), and have as many as 40 fractionating trays. The heavier fractions condense first. Lighter fractions, like gasoline, which boils at 104 to 392°F (40 to 200°C), naphtha, jet-fuel, and kerosene condense at higher levels. Some of the condensed liquid is pumped to the top of the tower as reflux. As it descends in the tower, the liquid collects some of the lighter vapors and absorbs some of the heavier ones. Some vapor fractions do not condense in the tower, and they are piped off at the top of the tower into a vapor recovery condenser. Other fractions, that do not reach their boiling point in the heating chamber, remain in that chamber and are collected at the bottom. They consist of heavier hydrocarbons such as asphalt, and heavy oils. Steam is introduced in the bottom of the column to aid in the separation of the heavier fractions. The fractions produced in fractional distillation of petroleum are known as *straight run products*. The output of the tower includes light and heavy naphtha, kerosene, and light and heavy oil.

When intended to be used for the production of solvents and high-purity petrochemicals, the fractionating column is of smaller diameter, and has many more fractionating trays, as many as 100 or more. More reflux is also used. This approach is called *superfractionation.*

H1b. ***vacuum distillation of petroleum fractions*** - Vacuum distillation, described above in C1b, is used to further distill heavier fractions from the fractionating column, to produce various lubricants. Vacuum distillation is used to avoid heating these heavier fractions to the point where cracking would occur. The usual pressure in this operation is 50 to 100 mm of mercury (6.7 to 13.3 KPa), allowing a lubricating oil to boil at 480 to 660°F (250 to 350°C) instead of at a temperature of over 600°F (315°C) at normal atmospheric pressure.[4] Residues from this vacuum distillation may be used as feedstock for cracking other products, or may be blended to produce fuel oil or asphalt.

H1c. ***absorption/stripping of petroleum factions*** - These methods, described above in C2 , are used to recover light components from the vapors that exit from the top of the crude oil fractionating column. Propane, propylene, butylene, and butane are commonly processed. These vapors are bubbled through, and are absorbed by, heavy naphtha or kerosene in an absorption tower. Other light gases—hydrogen, methane, ethylene, and ethane, are not absorbed. The absorption tower is pressurized to 100 to 150 psi (700 to 1000 KPa). The solvent with its absorbate is then processed in a stripping column with heat. This releases the absorbate that is then condensed to become liquified petroleum gas (LPG).

H1d. ***solvent extraction*** - is used to further separate some of the products of fractional distillation. A solvent such as benzene, phenol, or furfural is mixed with the liquid output from one level of the distillation tower. The solvent may dissolve some of the fractions or cause them to solidify, so they can be separated from the liquid. A common application is the processing of lubricating oils by removing heavy aromatic components. This processing yields an oil with a wider range of temperatures at which the oil's viscosity will remain within the desired range.

H1e. ***crystallization of petroleum fraction contaminants*** - is a third separation method. (See crystallization in C5 above.) Crystallization is used to remove wax and other semisolid substances from the heavier fractions. A common application occurs with lubricating oils which must be free from wax. The oil is mixed with a solvent (usually a mixture of methyl ethyl ketone and benzene, where both solvents have a function in the process). The mixture is cooled to about –5°F (–20°C) sufficiently low to cause the wax to crystallize. The liquid is then filtered with rotating cylindrical filters. The wax is deposited on the cylindrical surface (that is covered with woven filter fabric), and is removed with metal scrapers after the surface oil is rinsed off with the solvent. The solvent-oil mixture is then separated by distillation and the solvent is reused.

H2. ***conversion*** - produces more valuable products from some of the less valuable fractions that result from the separation processes. There are two prime conversion processes: *cracking* and *combining.*

H2a. ***cracking*** - produces a lighter product, primarily gasoline, from a heavier petroleum fraction. It also produces gases: ethane, methane, propylene and propane that are raw materials in the manufacture of plastics, synthetic rubber, detergents, textiles and agricultural chemicals. There are two cracking processes: *thermal cracking* and *catalytic cracking.*

H2a1. ***thermal cracking*** - In this process, heavy petroleum fractions are subjected to intense heat and pressure. This breaks the molecular bonds of the large molecules of heavier fractions, forming smaller and simpler molecules. These molecules then may spontaneously undergo further changes, or combine with other molecules to form molecules of naphtha, gasoline, and other lighter petroleum products. Typical thermal cracking pressures are 100 to 1000 psi (700 to 7000 kPa), and typical temperatures are 850 to 1000°F (450 to 540°C)[4]. However, thermal cracking (without catalysts) is seldom used since the use of catalysts increases the yield of desired high-octane products and produces less of the undesirable compounds such as asphalt and coke-forming constituents.

H2a2. ***catalytic cracking*** - uses a catalyst to facilitate the breakdown of the large molecules. Zeolites (types of clay), and other minerals or molecular-sieve materials are the catalysts used. The heated, heavy fractions come in contact with the catalysts and are converted to lighter materials. Catalytic cracking enables pressures in the cracking chamber to be lower, reduces the amount of energy needed, and produces higher octane (smoother burning) gasoline. Typical catalytic cracking temperatures are 900 to 1020°F (480 to 550°C) with pressures of 10 to 20 psi (70 to 140 kPa). In the fluid-catalytic process, the catalyst is in fine-particle form that acts as a liquid in the cracking unit. It is suspended in a flow of feed liquid vapor. After cracking the catalyst particles are separated from the cracked fluid by cyclone separation. In the fixed-bed process, the feed liquid is passed through a stationary bed of solid catalyst particles. With either process, the catalyst particles become coated with carbon during the cracking operation, and the carbon is removed with steam and by burning. The heat of burning prepares the catalyst for reuse. The product from the cracking reactor is processed by fractional distillation, yielding mostly cracked naphtha, which is blended with other hydrocarbons to make gasoline. The gaseous products of the distillation column consist of propylene and butylene which have petrochemical applications. The balance is consists chiefly of fuel gas and other gaseous hydrocarbons.[3]

When hydrogen is added to the cracking chamber, it reacts with the materials present and the yield of desirable products is increased. The process variation is called *hydrogenation*, and is the reverse of cracking. Smaller, simpler molecules of gaseous fractions are put together, to form longer, more-complex molecules of more-useful products. Three common combining processes are polymerization, alkylation and reforming.

H2b. ***polymerization*** - occurs when light, gaseous fractions, resulting from cracking, are subjected to high pressure and temperature while in contact with a catalyst. The molecules combine, forming longer, more-complex molecules, and the resulting materials are called polymers. Propylene and butylene fractions are commonly polymerized for use as components of high-octane gasoline and other products. Pressures of 400 to 1100 psi (2800 to 7600 kPa) and temperatures of 350 to 450°F (175 to 230°C) are employed in the polymerization chamber. The catalyst usually is phosphoric acid carried on pellets of a porous sedimentary rock.

H2c. ***alkylation*** - produces a fraction known as "alkylate", which is useful in producing certain fuels. Alkylate has a high octane rating and is used to improve unleaded gasoline. The alkylation process is similar to polymerization and is exothermic. It involves a chemical reaction between a hydrocarbon (usually isobutane) and an olefin (ethylene, propylene, butylene, or amylene). The olefin feedstock is obtained from the gases produced during catalytic cracking; isobutane comes from refinery gases. The reaction between them takes place with an acid catalyst (hydrofluoric or sulfuric acid) at a controlled temperature of 35 to 45°F (2 to 7°C) in the sulfuric acid process, and between 75 and 115°F (24 and 46°C) with the hydrofluoric acid process. The product of the reaction is a high-octane branched-chain hydrocarbon.

H2d. ***reforming***[6] - is a means of raising the octane rating of gasoline. It involves changing molecules of gasoline and naphtha to aromatic and branched-chain molecules that have high octane ratings. The molecular changes can substitute for the addition of lead to gasoline, since that is no longer acceptable because of environmental issues. The reforming process is a combination of isomerization and cracking. *Catalytic reforming* is the dominant process. One major method uses naphtha and hydrogen, which are mixed and fed to a preheater and then to four reactors in sequence. Heating takes place before the material is introduced to each reactor. The reactors contain alumina and a small amount of platinum. They operate at pressures of 220 to 1000 psi (1500 to 7000 kPa) and temperatures from 300 to 950°F (150 to 510°C). A series of complex reactions takes place and the resulting product is cooled and then fractionated. The final reformed material is used as either an anti-knock element in gasoline or further fractionated to produce benzene, toluene and xylene. These aromatic materials are used in the production of synthetic rubber, plastics and food preservatives.

H3. ***chemical and other treatments*** - of petroleum products include removal of sulfur and other impurities, addition of various additives, and blending of several fractions with others to improve product performance.

H3a ***sulfur removal (hydrogen treatment)*** - is accomplished by mixing hydrogen gas with the fraction involved, heating the mixture to vaporize the oil fraction, and then passing the mixture over a catalyst. Nickel, tungsten, or a mixture of molybdenum and cobalt oxides on an aluminum support may be used as the catalyst. The operation takes place at a temperature normally between 500 and 800°F (260 and 425°C) and a pressure of 200 to 1000 psi (1400 to 7000 kPa). Hydrogen sulfide is formed and is removed from the mixture by solvent extraction. (See H1d.) The hydrogen sulfide is used as feed material for the production of high-purity sulfur.

H3b ***additive addition*** - Certain chemical compounds may be mixed with a raw petroleum product to improve its performance. Small amounts may produce a major improvement in fuel or lubricant performance. An example would be a detergent added to a lubricant or gasoline. Others are tetra-ethyl lead added to gasoline to raise its octane rating, anti-icing agents, organophosphates, to reduce deposits, and antioxidants as stabilizers. The use of some of these additives has been stopped or reduced for environmental reasons.

H3c. ***blending*** - Petroleum refinery fractions are blended together to produce a better overall product. One example is lubricating oils, which may be blended with different fractions to produce an oil with the desired viscosity. Gasoline blending is much more complicated, and as many as 15 different hydrocarbon fractions can potentially be included in finished gasoline. Octane is a key characteristic that is set by blending different fractions. Other factors that may be adjusted are color, stability, boiling points, vapor pressure, and sulfur, olefin, and aromatics content. The cost of the different hydrocarbons, as well as their properties, must be considered.

I. Chemical Reactions

A chemical reactor is often a complex device because it has to contain the materials that are involved before, during, and after the reaction, where temperature and pressure changes may take place and where the properties of the materials will change. Materials must be brought to, processed, and removed from the reactor. They may be in gaseous, liquid, or solid form. Mixing of the reactants normally is part of the reaction process. Catalysts may be required, some fixed, others mixed with the reactants. Equipment very often operates at higher-than-ambient temperatures but, with other reactions, operates at lower temperatures. High pressures may be used, though some reactions require a vacuum. Production chemical reactions, like other chemical operations, may be performed on either a batch or continuous basis. The choice of either one depends primarily on the quantity of reactant to be produced.

Batch processes are described in A., above. No material is either added or removed from the reaction vessel during the reaction. Batch processing is useful in prototype and small-quantity production, in pharmaceutical manufacture, and in fermenting operations. Fig. 11I3, view (a), shows a typical batch reactor.

Semibatch processes are those where one reactant is fixed in the container and another is fed in small increments, or continuously. The term also applies when one of the products of the reaction is removed continuously, or in small increments, from the reaction vessel. Semibatch processing is also used in small-quantity production.

Continuous processes using chemical reactions include the following:

Continuously stirred tank reactors (CSTR) run steadily during the reaction. Feed materials are added continuously, and reaction products are removed continuously from the reactor. This method is used when the reactants must be mixed or agitated to promote the reaction. The reactor often consists of a series of individual vessels. Material is fed into the first vessel where the reaction begins. Partly-reacted material is fed to a second vessel, whose output is fed to a third vessel, and so on. Mixing and reaction take place in each vessel. At the end of the series, fully-reacted product exits from the last vessel. Some approaches use a similar series of partial reactions but arrange for it to take place on shelves or trays of a single vessel. As the material flows from level to level of the shelves, the reaction proceeds until the final product exits the vessel at the bottom.

Plug flow reactors (PFR) consist of one long reactor, or many short reactors in a tube bank.[2] All materials travel the full length of the reactor. The reaction rate changes as the materials move down the length of the reactor. There is no axial mixing.[5] Gas-phase reactions are usually involved. PFRs are used in large quantity production, including those operations requiring high-temperature reactions.

Tubular *packed bed reactors (PBR)* are tubular reactors packed with a solid catalyst. PBRs are used primarily in heterogeneous gas-phase reactions when a catalyst is involved. The operation is continuous.

Another common type is the *tubular flow reactor (TFR)*. These units have parallel pipes or tubes inside a cylindrical vessel. Reactant materials are fed from one end and the reacted product is withdrawn from the other end. Heating fluids flow in the spaces surrounding the pipes while the reactants flow inside the pipes, or vice versa. TFRs are useful for products that require heat exchange during the reaction.[5]

Chemical reactions are also sometimes classified as *homogeneous reactions* and *heterogeneous reactions*. Homogeneous reactions are those that occur in a single phase, that is, reactions between substances that are in the same phase - gas, liquid, or solid. The most common are reactions between gases, and between liquids or substances dissolved in liquids. Heterogeneous reactions are those that involve two or more phases—gas/liquid, liquid/solid, gas/solid, or two immiscible liquids.

I1. ***gas-phase reactions*** - The gases are mixed by injecting a stream of one gas into the other gas or gases. However, gas/gas reactions are less common than gas/liquid or gas/solid reactions. A gas may be liquified before the reaction to provide reactivity or higher reaction speed, because some reactions that take place in the liquid phase do not take place or are slow in the gaseous state. Gas-phase reactions usually require an elevated temperature, and, often, elevated pressure. Raising temperature and pressure speeds the rate of reaction of gaseous materials. Higher temperature and pressure increase the contact and collision of molecules. According to the collision theory, reactions result when molecules or atoms of the reacting materials contact each other or collide.[3] With gas-phase reactions, heat may be supplied in a number of ways. The reaction vessel may be heated by flame or steam. Alternatively, heated brick linings may provide contact heat, or heated granules of sand may be fed into the reaction vessel. After cooling during the reaction, such pieces are fed out of the vessel, reheated and returned. Sometimes, heat is provided by burning a portion of one of the reactant gases with a small amount of air or oxygen. Exothermic reactions may require cooling of the reaction vessel. Examples of gas-phase reactions are found in the production of olefin plastics, benzene, acetylene, and in the manufacture of ammonia from nitrogen and hydrogen gases.[5] Fig. I1I1 shows two gas reactors schematically.

I2. ***gas/liquid reactions*** - Fig. I1I2 shows several types of reactor arrangements for gas/liquid reactions. Common gas/liquid reactions are carried out to remove small amounts of unwanted constituents from air, hydrogen, hydrocarbons, and other gases, to modify liquids by hydrogenation, halogenation, oxidation, nitration, and alkylation, in the manufacture of nitric, sulfuric, and adipic acids and phosphates, and for certain biotechnical processes such as fermentation, protein production, and the treatment of sludges[5].

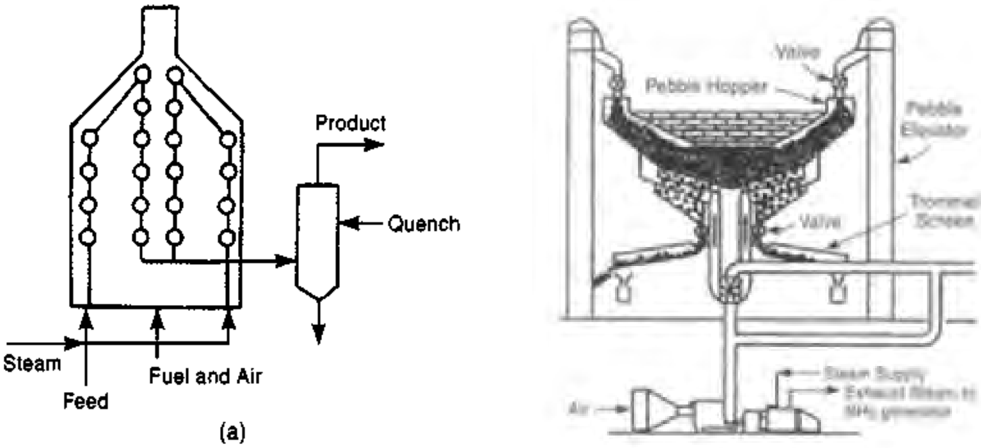

(a)

(b)

Fig. I1I1 Equipment for two gas-phase, non-catalytic reactions: (a) steam cracking of light hydrocarbons in a tubular fired heater, (b) pebble heater for the fixation of nitrogen from air. (*Reproduced with permission from Perry's Chemical Engineering Handbook, R.H. Perry and D.W. Green, McGraw-Hill, 1997.*)

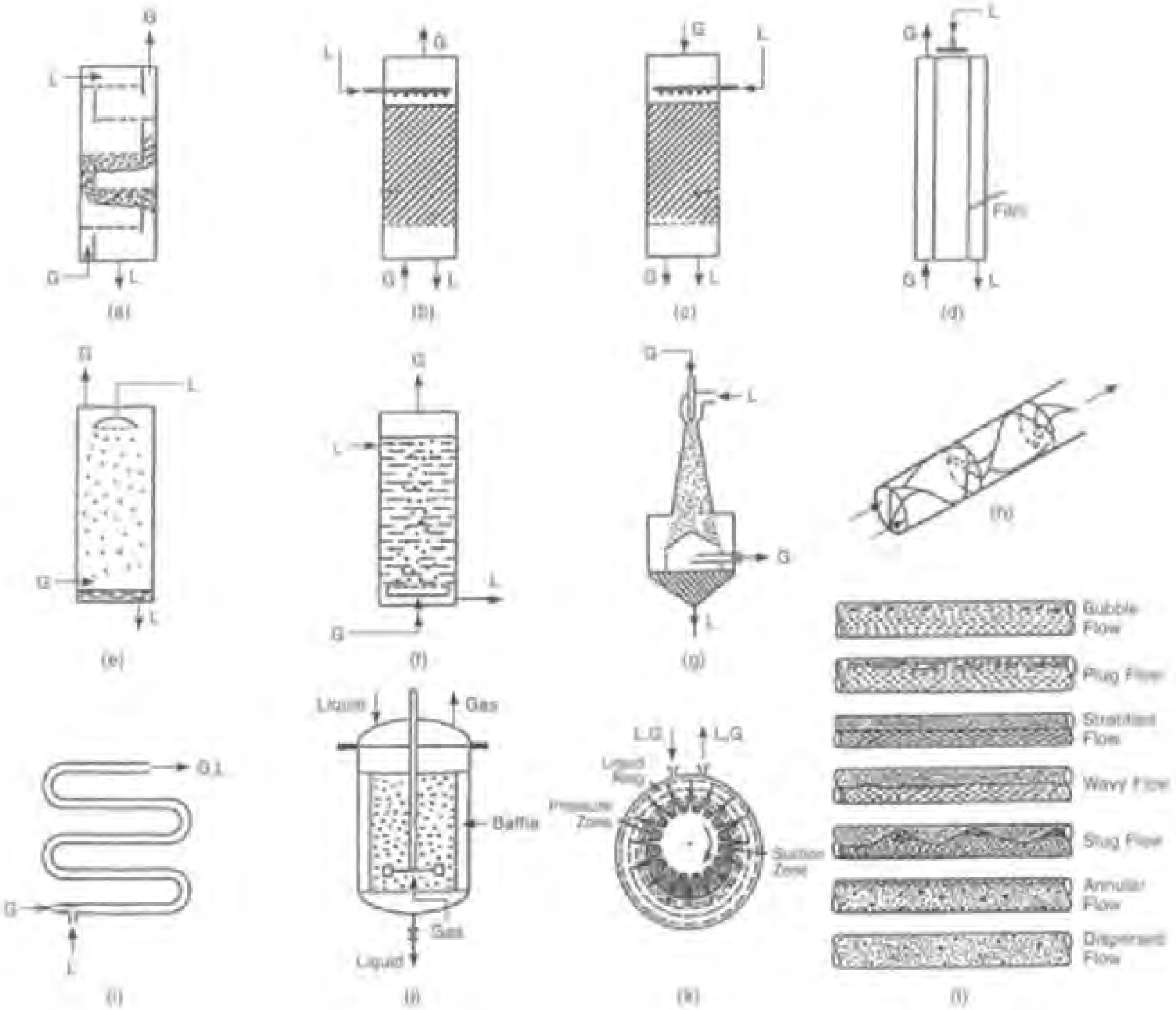

Fig. 1112 Types of industrial gas/liquid reactors: (G = gas; L = liquid.) (a) tray tower, (b) packed, counter current, (c) packed, parallel current, (d) falling liquid film, (e) spray tower, (f) bubble tower, (g) venturi mixer, (h) static in-line mixer, (i) tubular flow, (j) stirred tank, (k) centrifugal pump, (l) two-phase flow in horizontal tubes. (*Reproduced with permission from Perry's Chemical Engineering Handbook, R.H. Perry and D.W. Green, McGraw-Hill, 1997.*)

In the hydrogenation of oils, the oil and a catalyst (usually nickel in flake form), are placed in a sealed vessel, the air is evacuated and hydrogen gas is fed into the vessel and mixed with the oil by impellers. For edible oils, temperatures are raised but limited to about 355°F (180°C). Pressure in the vessel will range from one to ten atmospheres[5]. The catalyst is filtered from the finished product. Other gas/liquid reactions involve gaseous oxygen, hydrogen, carbon dioxide and carbon monoxide.

13. ***liquid/liquid reactions*** - are somewhat common. They often involve the use of mechanically-agitated tanks with heat-transfer capability. Other equipment uses the difference in specific gravity of the liquids to provide a flow in the tank and contact with the reactant liquid. Fig. 1113 illustrates several

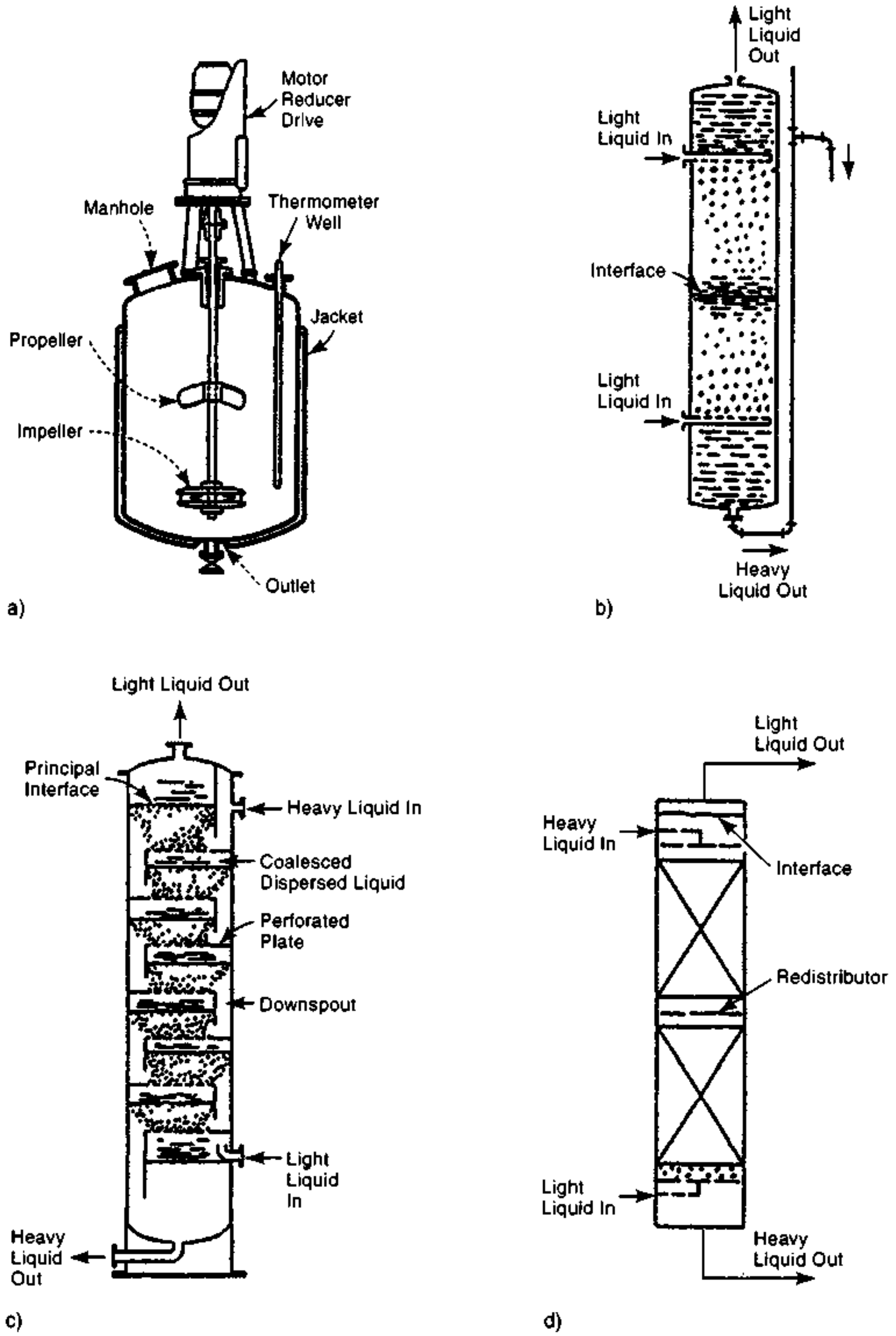

Fig. 11.13 Equipment for liquid/liquid reactors: a) batch stirred sulfonator, b) spray tower with both phases dispersed, c) sieve ray tower with light phase dispersed. d) two-section packed tower with light phase dispersed. (*Reproduced with permission from Perry's Chemical Engineering Handbook, R.H. Perry and D.W. Green, McGraw-Hill, 1997.*)

reactors for liquid/liquid materials. Applications of liquid/liquid reactions are found in soap making with alkali, explosives manufacture from the nitration of aromatics, and gasoline production.[5] Esterification (See L.) and the manufacture of resorcinol from benzene and sulfuric acid are other examples.

I4. ***gas/liquid/solid reactions*** - Common examples of these reactions include the reactions of acids and metals, and the changes that take place when electrolytic cells and batteries operate.[3] In production, these reactions often take place with solids in granule or particle form. The solid may be a reactant or a catalyst. If the solid is a granular catalyst, the surfaces of the granules are normally porous. Several methods are available to provide contact between the solid and the liquid and gas. One method uses a *trickle bed*, a fixed bed of solid material. The gas and liquid flow downward from gravity through the bed of granules, typically about 1/8 inch (3 mm) in diameter. This approach is used in the hydrosulfurization of petroleum oils.[5] Another trickle bed application is the removal of gaseous impurities from the atmosphere in pollution control. The flow of gas is then upward through the bed of solid material.

Another method, the *flooded fixed bed reaction*, uses an upward flow of gas and liquid through a bed of solid particles. A screen at the top of the reaction vessel may be used to block the escape of particles. This approach is used in some hydrogenation operations.[5]

Suspended catalyst beds use smaller solid particles that are either fluidized by upward movement of gas bubbles or as a suspension in a fluid mixture. The solid particles, after the reaction, must be removed from the fluid product by filtering. One application of fluidized reactors is the treatment of heavy petroleum fractions; another is the treatment of waste liquid. Air and liquid are passed through a vertical column of sand and bacterial growth takes place on the sand grains. Still another example is the liquefaction of coal, in which hydrogen is reacted with solid coal in a water slurry. Fig. 11I4 shows a typical three-phase fluidized bed reactor.

I5. ***solids/solids and solids/gas reactions*** - There are many proprietary processes that react solid materials. These processes often take place at the elevated temperatures that result from the contact of the reactants with combustion gases. Many common solid reactions involve the thermal decomposition of some material. Some common solid reactions are the following mentioned in Perry:[5]

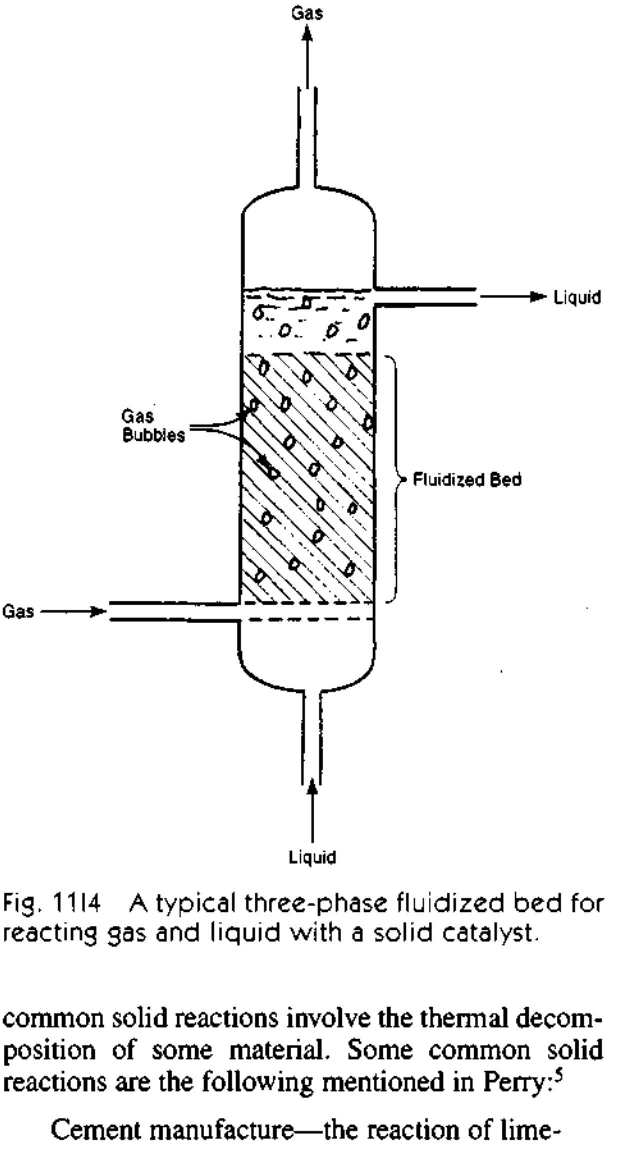

Fig. 11I4 A typical three-phase fluidized bed for reacting gas and liquid with a solid catalyst.

Cement manufacture—the reaction of limestone with clay.

Boron carbide manufacture from boron oxide and carbon.

Calcium silicate produced from lime and silica.

Calcium carbide from lime and carbon.

Leblanc process for making soda ash (Na_2CO_3) from common salt.

In many of these reactions involving solids, the material is in particulate form. There is usually some movement of the material in the reaction vessel to expose it to heat and the reactant gas, if one is involved. Fig. 11I5 illustrates some equipment used in solids reactions.

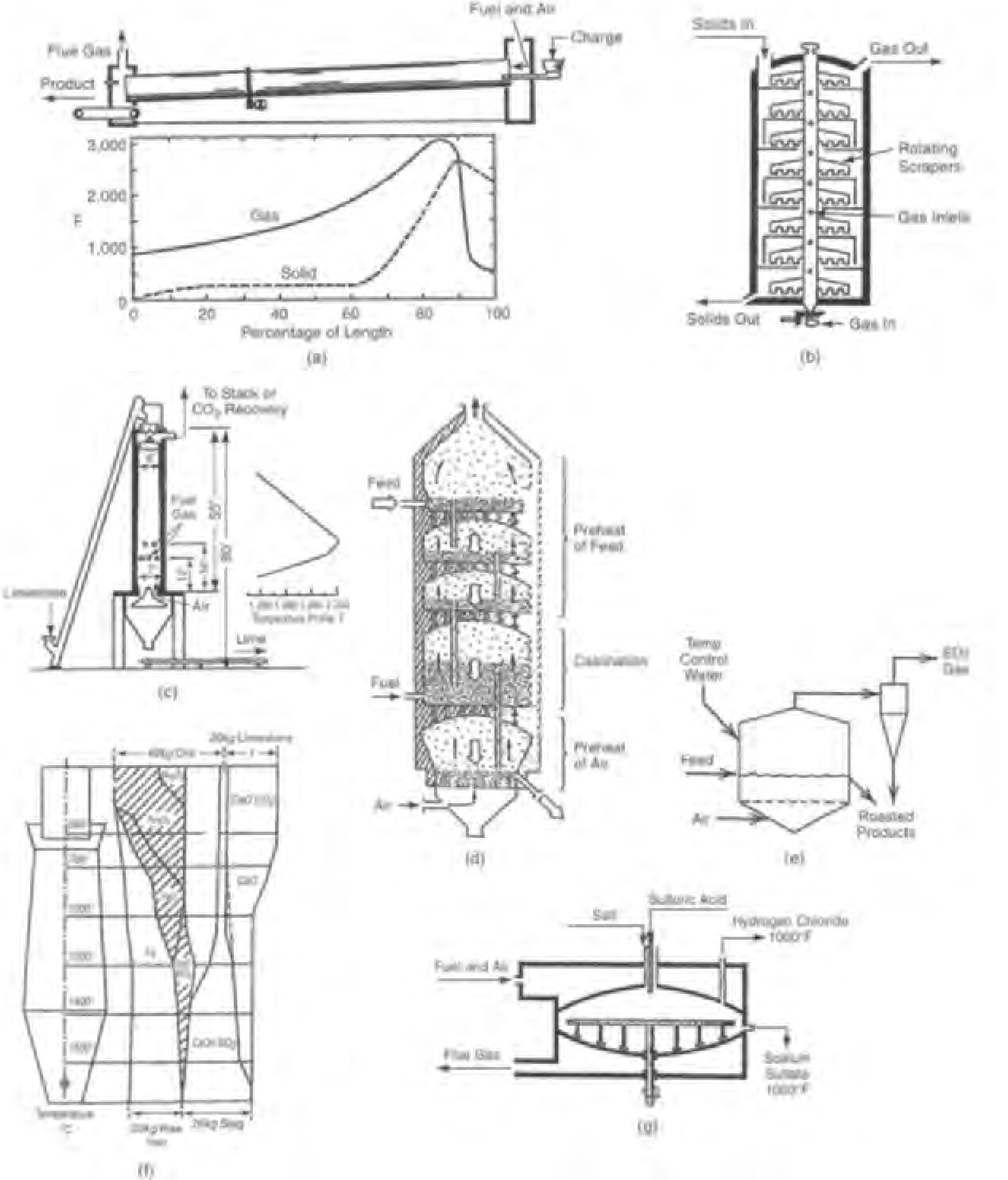

Fig. 1115 Reactors for solid materials: (a) rotary cement kiln and temperature profiles in the kiln, (b) multiple hearth reactor, (c) vertical kiln for lime burning, (d) five-stage fluidized bed lime burner, (e) fluidized bed for roasting iron sulfides, (f) conditions in a vertical moving bed (blast furnace) for reduction of iron oxides, (g) mechanical salt cake furnace. (*Reproduced with permission from Perry's Chemical Engineering Handbook, R.H. Perry and D.W. Green, McGraw-Hill, 1997.*)

Some applications[5] of the process of reacting solids with gases take place in the mining industry, where sulfide ores are converted to sulfates or oxides that are more easily reduced to metals. Others are the conversion of Fe_2O_3 to Fe_3O_4 in a reducing atmosphere, the chlorination of ores of aluminum, uranium, titanium, and zirconium, the production of hydrogen gas from the reaction of iron and steam, the manufacture of blue gas by reacting steam with carbon, and the production of calcium cyanamide from calcium carbide and nitrogen. Nitriding, using steam for surface hardening is another application.

I6. ***reactions with catalysts*** - involve the addition of a substance (the catalyst) to the reactions. The catalyst either does not change chemically during the reaction or is regenerated at the end of the reaction and thus suffers no permanent effect. Catalysts can be gaseous, liquid, or solid. The reaction with the catalyst is much faster than it would be otherwise. It is believed that an intermediate compound is formed, which reacts with the other reactants present to produce the final product, and at a lower activation energy level than that required for direct reaction of the reactants[2]. Examples of catalysts used in commercial chemical production are the following:

Nitrous oxides, used as catalysts in the oxidation of sulfur dioxide in the production of sulfuric acid.

Sulfuric acid, used as a catalyst in the production of diethyl ether from ethyl alcohol.

Cobalt carbonyl, used as a catalyst in petroleum refining to combine carbon monoxide and hydrogen to olefins to form aldehydes and alcohols. A number of other catalysts are employed in the many operations involved in refining of petroleum into fuel, lubricants and petrochemical products.

Iron, used as a catalyst in the production of ammonia by reacting hydrogen and nitrogen.

Platinum, used as a catalyst to oxidize ammonia in the production of nitric acid.

J. Heat-transfer Methods

Heating is an integral part of many chemical operations; cooling is much less frequent but still may be an essential processing element. The most important type of heat-transfer device is the tubular heat exchanger which consists of tubing inside a vessel so that fluid can circulate in the tubing without directly contacting material in the vessel. Most devices have multiple heat exchange tubes in each chamber or shell. Such devices are also called *shell-and-tube heat* exchangers. Fig. 11J shows a typical tubular heat exchanger, equipped with baffles to ensure more thorough contact of the liquid in the vessel with heat exchanger surfaces. Fig. 11J-1 shows a simple double-pipe heat exchanger. Fig. 11J-2 shows a plate-type heat exchanger. This type provides more efficient heat transfer between the fluids processed. Counterflow (opposite direction flow of the two liquids) is used in all three devices.

In the most common arrangement of tubular heat exchangers, one material is to be heated and it is contained in the vessel while the heat transfer

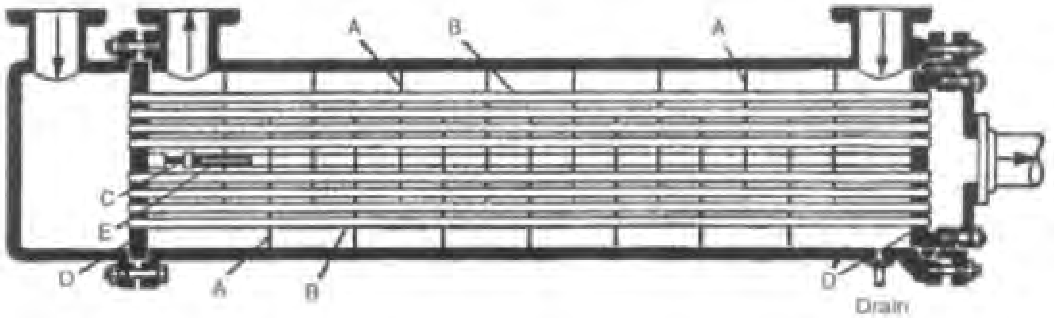

Fig. 11J Liquid-to-liquid tubular heat exchanger: A, baffles; B, heat-exchanger tubes; C, guide rod; D and D', tube sheets; E, spacer tubes. (*by permission, from Introduction to Chemical Engineering, W. L. Badger and J. T. Banchero, McGraw-Hill.*)

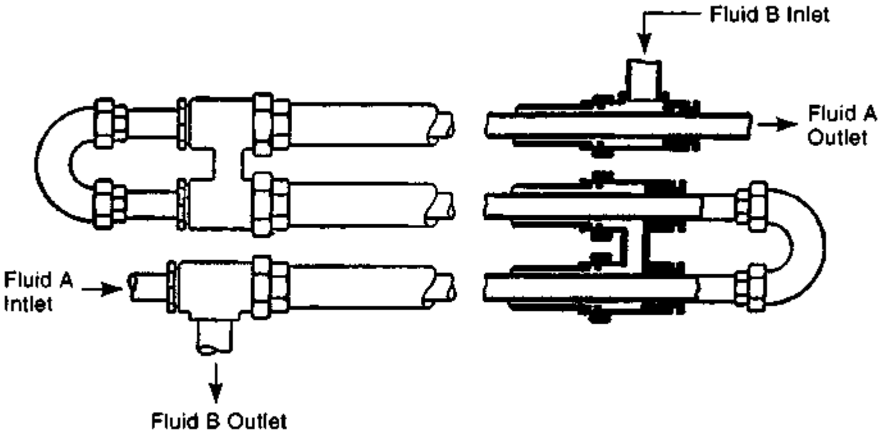

Fig. 11J-1 Double-pipe heat exchanger. Fluids in the inner and outer tubes flow in opposite directions to maximize the heat transfer.(*by permission, from Introduction to Chemical Engineering, W. L. Badger and J. T. Banchero, McGraw-Hill.*)

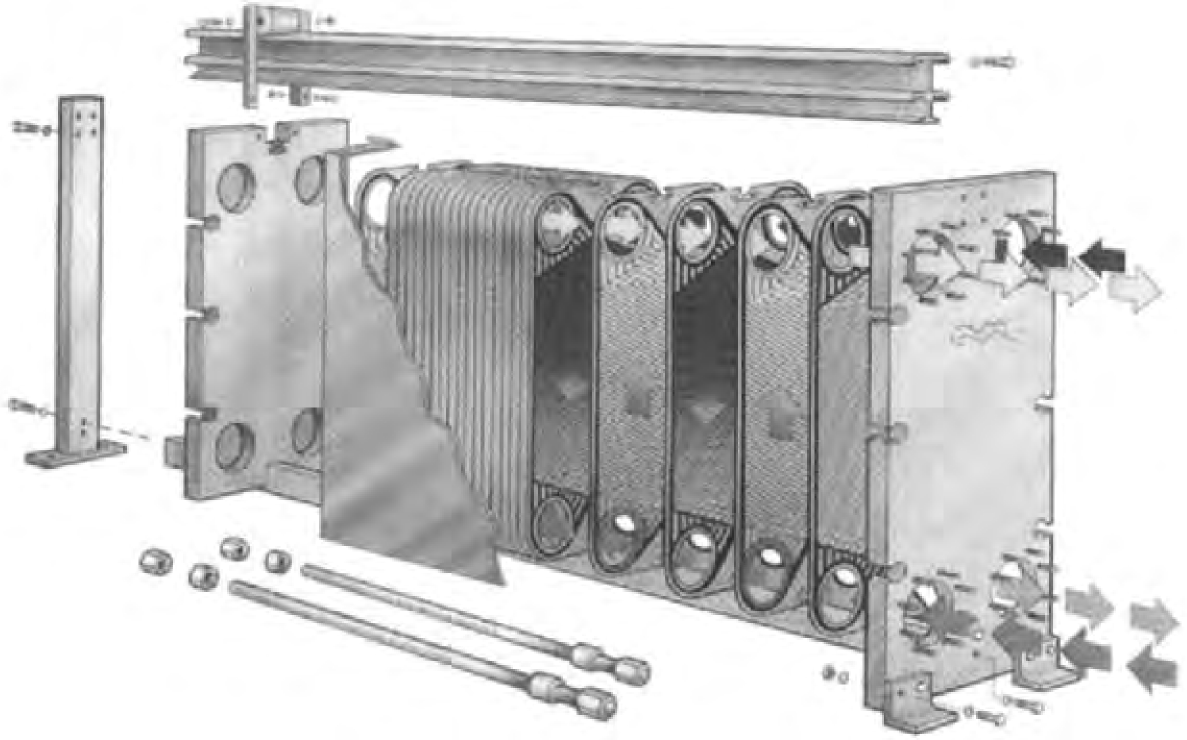

Fig. 11J-2 A plate-type heat exchanger. This type provides more efficient heat transfer than the more traditional shell and tube type. It is used where heat recovery is more important, where corrosive fluids are involved, and where space is more limited. (*Copyright Alfa Laval Inc. All rights reserved. Used with permission.*)

fluid - steam, hot gas, air, a liquid metal, fused salt, water or other liquid - circulates in the tubing, but these positions of the material and heat transfer fluid may be reversed. Heat is transferred to the material in the vessel primarily by conduction through the tube walls. Fins on heat exchanger tubes increase the heating area that can be in contact with a gas or liquid to be heated. Multiple passes of liquid across heat exchanger tubes is also frequently used. Chilled fluid may circulate in the tubes if the operation requires cooling. Refrigeration equipment may be used to chill the fluid. Chemical reactions and phase changes may accompany the heat transfer. Often the reaction or phase change takes place right in the heat exchange device. Examples are evaporators, condensers, stills, and polymerizers.

Applications of heat transfer include the following: transfer of heat from metals in a nuclear reactor to water, cooling of internal combustion engines, turbines and compressors, operation of air conditioning and refrigeration equipment and in many chemical processing and food processing operations where evaporation, condensing, drying and other phase changes are involved.

Some operations involve heating one fluid and cooling another in the same heat exchanger. This takes place in petroleum refining, when one fraction from distillation is cooled while warming another. Another example is the preheating of combustion air supplied to a furnace and the cooling of flue gases. In these examples, the two fluids can perform the function with one another when one circulates in the outer chamber of the apparatus and the other circulates in the tubing.

Paragraphs C11 (electro thermal processes) and C12 (drying) describe some heating methods. Also see Fig. 11C1, 11C7g and 11C7g-1.

J1. ***heat exchange for solid materials*** - Transfer of heat to or from solid material is more difficult than between fluids because the solid material can not be put in contact with the heat transfer surface so easily. However, solid materials, particularly when they are in powder, pellet, granule, or smaller piece form are frequently either cooled or heated as part of some chemical process. Jacketed kettles are more frequently used with solid materials than are tube heat exchangers. Radiant heating is also used. Solids are heated for drying or removal of other volatile constituents, for fusing, solidification, oxidation, or some other chemical reaction. One use is the cooling and solidification of liquid materials. For this purpose, batch kettles are used, with agitators for the liquid as it solidifies; continuous process solidification equipment uses vibrators or sheet metal conveyor belts on the surface of a cooling bath, with sidewalls on the conveyor to keep the coolant from contaminating the material to be solidified. Another method uses rotating drums with coolant sprayed or contained inside, and material to be cooled fed to the outside surface as the drum rotates. These types of equipment are used to solidify sulfur, grease, resins, wax, soap, chlorides and some insecticides. Food applications include cheese, gelatin, margarine, and gums.[5]

Equipment to fuse solids from liquid or powdered material can be of several basic types. They include horizontal-tank types that mix and move the material by screw conveyor inside a jacketed cylindrical vessel. These units are used to melt or cook dry solids, to dry solid materials containing liquids and in the rendering of fats from meat scraps. Vertical, agitated, and jacketed kettles are used for batch quantities. A mixer/agitator insures that all material is brought into contact with the heated walls of the kettle. A third type is a roll mill. In one variation, powdered material is fed from a hopper between the heated rolls. As the rolls rotate, the material is softened by the heat, kneaded, and mixed. When fully blended and fused, it is removed from the roll surface with peeling knives. This type of equipment is used in the compounding of rubber and plastics.

J2. ***cooling with air*** - is used to reduce the temperature of liquids and to condense vapors. In large-scale production situations, the cooling equipment is normally placed outdoors and uses atmospheric air as the cooling medium. These outdoor cooling devices can involve quite large structures and, if so, are referred to as *cooling towers.* Two prime types of cooling towers are in common use, *evaporative cooling towers,* where the liquid (water) to be cooled is brought into direct contact with the cooler air, and *dry (or nonevaporative) cooling towers* that have no direct contact between the liquid to be cooled and the ambient air.

With wet cooling - *evaporative*- towers, there is both sensible heat transfer from the contact with the water and the air, and evaporative cooling as some of the water changes to vapor. The water is sprayed downward into the air stream or onto a series of surfaces called *fill* or *packing*, which slow the downward flow rate of the water and provide much more contact between the cooling air and the water. Cooling from evaporation normally accounts for 65 to 75% of the cooling action.[4] The air is heated by the water it contacts, allowing it to absorb a greater amount of vapor. The amount of water lost from the system, due to evaporation, is not great. However, there is some loss from drift and blowdown.[4] The wet cooling approach is more effective in cooling than the dry or non-evaporative system, but the lost water must be replaced and there is a visible cloud of moisture from the system. Wind, natural draft, and/or fans may be used to move air through the tower. Fig. 11J2 illustrates an evaporative cooling tower. Fig. 11J2-1 shows one kind of fill used to increase the amount of water surface in contact with the cooling air.

Non-evaporative coolers employ heat exchangers, most commonly with bundles of parallel tubes to carry the water or other fluid to be cooled. Each tube has fins extending from the outer surface. Spiral-wound fins are common. Fans blow air streams over a group of parallel tubes and move the cooling air upward. Heat added to the air by the finned tubes increases its upward movement. The equipment may also rely on wind and natural draft for movement of the cooling air. Nonevaporative cooling towers are used if the liquid to be cooled is hazardous, or is expensive to replace. They are also used in arid regions where the cooling water is less available and must be conserved.

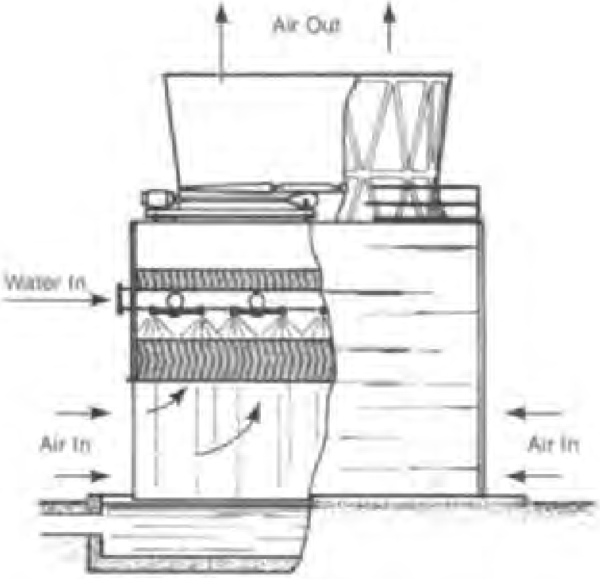

Fig. 11J2 Sketch of an evaporative (wet) cooling tower with counterflow of cooling air. (*Courtesy Marley Cooling Technologies.*)

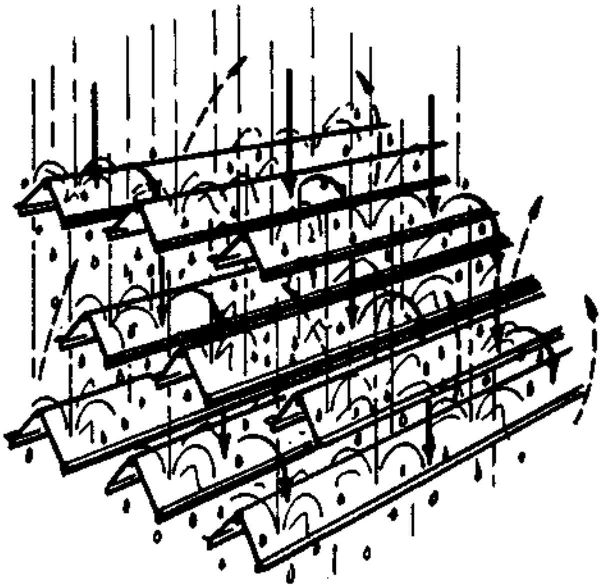

Fig. 11J2-1 A splash-type of fill (or packing) used to increase the amount of contact between water to be cooled and the flow of cooling air. (*Courtesy Marley Cooling Technologies.*)

Some cooling towers are wet/dry, that is, they have both evaporative and non-evaporative sections in combination. The heated water first passes through a non-evaporative section, and then flows, usually by gravity, through an evaporative section. Cooling air from outside the equipment flows through both sections in separate streams. These combination systems lose less water than evaporative systems, and cool better than purely dry systems. Fig. 11J2-2 shows a wet/dry system designed to conserve cooling water.

Cooling towers are also classified by the flow path of the cooling air. Counterflow towers use a vertical upward flow of air that contacts the downward flow of the water to be cooled. Crossflow towers use a horizontal movement of outside air through at least one stage of fill, and then upward movement to exit the tower.

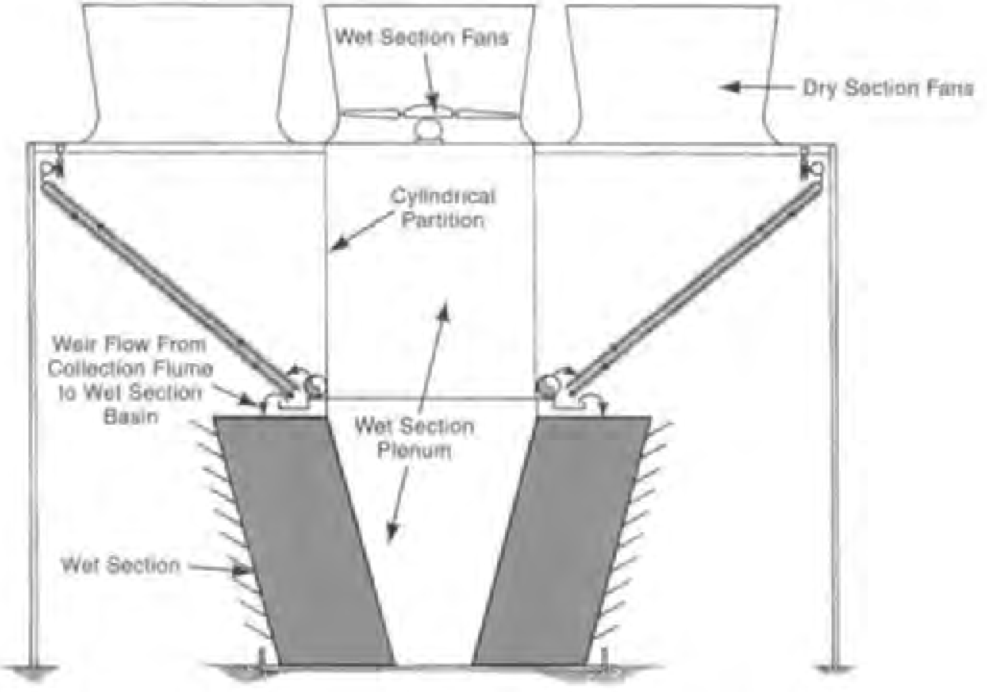

Fig. 11J2-2 A schematic view of a wet/dry cooling tower designed to conserve the amount of cooling water lost to evaporation. (*Courtesy Marley Cooling Technologies.*)

Air cooling devices are used to condense steam, to reduce the temperature of cooling water from industrial processes, and to act as a heat sink for some processes that involve heating and cooling. After giving up its heat to the air, the water is returned to the industrial process to be reused for continuing cooling.

K. Extraction and Recovery of Metals from Ores

This group of processes is sometimes referred to as extractive metallurgy. It includes two basic phases: *concentration* or *mineral dressing*, during which the metallic ore is separated from gangue (stones, rock, and other unneeded earth material) and *recovery, refining* or *process metallurgy*, during which the ore is then converted to a usable metal. Concentration may first involve a certain amount of size reduction - crushing and/or pulverizing as summarized in section D above. Then, physical separation of the ore from the gangue takes place using one or more of the methods described in section C8 above. These operations include sieving, flotation, dense media separation, drying, and magnetic and electrostatic separation. Sometimes, a specialized process for the particular ore is used. Some ores are then made into larger particles by sintering or pelletizing to facilitate the subsequent operations. Following the concentration, the chemical refining steps can be carried out. These may be quite complex and often involve multiple operations. Chemical, pyrometallurgical, or electrolytic processes, or a combination of them, may be used.

K1. ***recovery/refining processes*** - The metallic compound in an ore is often converted to another compound that is more easily treated before it is reduced to the metallic state. Sulfide ores are converted to oxides, sulfates or chlorides; carbonates are converted to oxides, and some oxide ores are converted to sulfates or chlorides. Three basic types of processes are commonly used to accomplish these changes. Some of these processes, involving aqueous solutions to dissolve the ore, are often referred to under the heading, *hydro metallurgy*. Others utilize heat to convert the ore or intermediate compound to another compound. These processes are sometimes referred to under the heading, *pyrometallurgy*.

Final refining may involve a series of chemical and other operations before metal of sufficient purity results. When electrolytic operations are involved, the term *electrometallurgy* is sometimes applied.

K1a. ***hydro metallurgy*** - is a variety of processes that utilize aqueous solutions and include two basic steps: The first basic step, *leaching*, treats the metallic ore to create a solution of a salt of the metal. The second basic step, which may involve several operations, recovers the metal from its salt solution. The first step involves dissolution or leaching of the metal from the ore. Dilute sulfuric acid is the most common leaching agent. The second basic step recovers the metal from the solution. A sequence of operations may be needed to recover the metal, including purification and concentration of the solution or both, precipitation with a suitable reagent, carbon adsorption, ion exchange, solvent extraction, and electrolysis. Hydro metallurgy is used in the production of many metals, including almost all non-ferrous metals. Most gold is recovered with these processes. Silver and copper are two other notable examples of metals recovered, at least in part, by hydro metallurgy. Others are aluminum, nickel, zinc, cobalt, uranium, molybdenum, tungsten, and beryllium. The processes are applicable to low-grade ores and are adaptable to automatic continuous methods but may be energy-intensive and may produce solutions and residues that must be properly disposed of. (However, the disposal of unusable bi-products is sometimes easier than when pyrometallurgy is used.)

K1a1. ***precipitation in hydro metallurgy*** - (See C6 above) Precipitation in hydro metallurgy can be effected with one of a variety of methods. One method reacts the metal salt solution with a gas, creating a compound that can be reduced more easily than the salt solution. Nickel is refined by treating nickel sulfate solution with hydrogen sulfide gas. Nickel sulfide precipitates from the solution. Another method reacts a more active metal with the one in solution. Copper metal precipitates from a solution containing copper ions when copper cementation iron is made to react with the copper solution. This method is used to precipitate weak copper solutions. A third precipitation method, used in uranium refining, involves changing the acidity of the salt solution of the metal. A concentrated leach solution of uranium is treated by adding sodium hydroxide to raise the ph. Sodium diuranate (yellow cake) precipitates from the solution.

K1b. ***pyrometallurgy processes*** - involve heating the metallic ore to a very high temperature, in either a kiln, hearth furnace, rotary kiln or fluidized bed reactor. (See Fig. 1115.) The heat has both physical and chemical effects on the ore. Operations include oxidation, calcining, sulfating, chlorination, reduction (smelting), and roasting. Pyrometallurgy is an important means of metal production. In the simplest treatment, a reducing or oxidizing agent is heated with the ore, producing liquid or gaseous metal and a by-product, liquid slag, or some gas. With sulfide ores, the reagent is usually oxygen and the gaseous by-product is sulfur dioxide. Any other metals in the ore form oxides. Pyrometallurgy processing temperatures range from about 300°F (150°C) to about 2900°F (1600°C). Reactions are rapid because of the high temperatures so large production quantities are possible with each furnace. Separation of metal from other materials is made easier because of the liquid or gaseous state of the metal. Examples of pyrometallurgical processes are pig-iron blast furnaces which reduce iron oxide to pig iron, lead blast furnaces that reduce lead oxide to lead metal, and smelting that produces copper matt or converts copper sulfide to blister copper. The complete process for any metal may include both hydrometallurgy and pyrometallurgy and sometimes also electrometallurgy. The latter is usually at the end or near the end of the production sequence but the pyrometallurgy may be either near the beginning or later in the sequence, depending on the ore and metal involved. It should be noted that scrap metals are an important ingredient in much metal production and are melted with metal extracted from ores. Steel, aluminum, copper, zinc and lead production all frequently involve the use of scrap.

K1b1. ***roasting*** - is an effective process for treating sulfite and carbonate ores. The ore is heated in air or an oxygen-enriched atmosphere to a temperature below the melting point of the metal. Temperatures are normally in the range of 1470 to 1725°F (800 to 940°C)[4]. Sulfides in the ore are converted to oxides with sulfur dioxide gas as the by-product. Some operations are performed to partially remove sulfur from the ore; in others, the ore is fully converted to an oxide. With carbonates, carbon dioxide is driven off by roasting, and a metallic oxide remains. In the production of zinc, zinc sulfide concentrates are roasted to fully convert them to oxides. The oxides are then processed further by sulfuric acid leaching. Roasting is still important in cobalt production and is used in some nickel and lead processing. Previously it was also used as a pretreatment before the smelting of copper. The roasting operation is performed in fluidized bed reactors with air entering from the bottom of the reactor to fluidize the particles of ore. The reaction is exothermic, providing enough heat to sustain the reaction as more ore is fed to the reactor and processed ore is discharged.

K1b2. ***smelting*** - is the most prevalent reducing process. A metallic ore, often after concentration, is mixed with a reducing agent and with a flux, and is heated to a high temperature. All constituents of the ore or concentrate are melted. The reducing agent combines with the gangue and forms a liquid slag which floats on the liquid metal, and both can be poured off separately. Smelting is used in the extraction of copper, nickel, lead, and other metals from their ores. Pig iron processing in blast furnaces is another smelting process. Common reducing agents are carbon or coke, natural gas, carbon monoxide gas, ferro silicon and iron (used in the production of magnesium), aluminum (used in the reduction of calcium ores), and magnesium (for titanium, zirconium, and hafnium).

K1c. ***electrometallurgy*** - uses electrolysis to separate metals. There are two processes: electro winning and electrorefining. (Also see C10 above.)

K1c1. ***electrowinning (electrolytic deposition)*** - uses insoluble metal electrodes in a solution containing the metallic compound. The solution can be aqueous or a molten salt, and it ionizes as an electric current passes between the electrodes. The metal ions are attracted to and are deposited on the cathode. The non-metal constituent is deposited on the anode. When the cathode is full, the metal is stripped from it. The process produces metals of high purity, but requires the use of solutions of high metal content. In some cases, the initial metal salt solution is concentrated beforehand by stripping it with another solvent. This concentration takes place in the production of copper from low-grade ores. The low-concentration leaching solution is treated with an organic solvent, immiscible in water, that strips the copper from the solution. Then another stripping operation with another solvent takes place and the resulting solution is suitable for electrowinning. Electrowinning is used in the production of nickel, zinc, manganese, antimony, silver, gold, and cobalt from aqueous solutions. It is used to produce aluminum, magnesium, calcium, beryllium, barium, sodium and potassium from molten salts.

K1c2. ***electrorefining*** - is a metal purification process similar to electrowinning. A metal electrode to be purified is immersed in a salt solution of the same metal and becomes the anode of an electrolytic circuit. Direct electric current is applied and electrolytic action deposits pure metal at the cathode. The method is economical and effective in removing foreign materials from the metal. It is used extensively in copper refining with an electrolyte of copper sulfate and sulfuric acid. Nickel, zinc, lead, silver and gold are other metals which are commonly electro refined.

K2. ***other chemical processes*** - Adsorption with activated carbon is used in gold processing to strip solutions of gold cyanide. The resulting solution is then stripped with another solution that is used in electrowinning the gold. Another operation that may be used in metal refining is the fractional distillation of impure metals to remove minor alloying metals. Zinc is fractionally distilled to remove lead or cadmium. The nickel carbonyl process is used to purify the nickel metal. Impure nickel is reacted with carbon monoxide gas to form nickel carbonyl gas. This gas can then be decomposed to yield nickel of high purity. Chlorination is an operation used in the extraction of some non-ferrous metals. Magnesium oxides or hydroxides are converted to chlorides, to feed electrolytic refining in the production of magnesium metal. Chlorination is also used in nickel processing, and with some refractory metals that do not reduce easily from oxides. Chlorination can be carried out with fine particle ore in fluidized bed reactors using chlorine gas.

K3. ***alloying processes*** - Alloying is normally an uncomplicated operation. Often, it means simply putting the proper weight of ingots of each constituent metal in the melting pot. When, the metals have melted, mixers are inserted in the melt to insure a homogenous alloy. Heat for melting is provided by one of several methods: gas or oil burners, electric arc, electrical induction. The main constituent is commonly melted first and alloying metals are then added and melted. Contamination of the melt must be avoided. Slag may be used to provide protection from the atmosphere to minimize oxidation of the melt, but vacuum furnaces are sometimes used for the same reason.

L. Esterification

Esterification is the chemical combination of an alcohol and an acid, with the elimination of water, to form an ester. The operation is similar to the production of an inorganic salt, except that the organic radical of the alcohol replaces the acid hydrogen of the acid. The alcohol and acid to be reacted are heated, together with a small amount of sulfuric acid. As the reaction products are formed, they are removed, usually by distillation.[6] Esters made from carboxylic acids are the most common. Ethyl acetate is made with this process using some excess of alcohol. The process takes place in a column and a ternary azeotropic alcohol (70% ethanol, 20% ester, 10% water) is used. Isopropyl, butyl and amyl acetates are made from this process with acetic acid. These acetates are useful as lacquer solvents. Other esters are used as plasticizers or in perfume. Vinyl, acrylic, and allyl alcohol esters are important in the manufacture of plastics. Polymethyl methacrylate ("Lucite", "Plexiglas"), polyethylene terephthalate ("Mylar") and textile fibers involved in "Dacron" and "Fortrel" are examples of products made using esterification. Esters of nitric acid are used in the manufacture of some solvents, medicines, perfumes, explosives, and monomers for plastics manufacture. Phosphate esters are used as flame retardants, insecticides and additives for gasoline and oil.

References

1. *Encarta Encyclopedia (from CD),* Microsoft Corp., Redmond Washington, 2004.
2. *The Engineering Handbook,* R.C.Dorf, CRC Press—IEEE Press, 1996, ISBN 0-8493-8344-7.
3. *The New Encyclopedia Britannica,* Macropaedia, Chicago.
4. *The McGraw-Hill Encyclopedia of Science and Technology, 8th ed.,* McGraw-Hill, New York, 1997.
5. *Perry's Chemical Engineer's Handbook, 7th ed.,* R. H. Perry and D. W. Green, McGraw-Hill, New York, 1997.
6. *Shreve's Chemical Process Industries, 5th ed.,* G.T. Austin, McGraw-Hill, New York, 1984.
7. *Introduction to Chemical Engineering,* W.L. Badger, J.T. Banchero, McGraw-Hill, New York, 1955.
8. *Unit Operations of Chemical Engineering, 6th ed.,* W.L. McCabe, J.C. Smith, P. Harriott, McGraw-Hill, New York, 2001. ISBN 0-07-039366-4.
9. *Elementary Principles of Chemical Processes, 3rd ed.,* R.M. Felder, R.W. Roiusseau, John Wiley and Sons, New York, 2000. ISBN 0-471-53478-1.
10. *Food Engineering Operations,* J.G. Brennan and other, Elsevier, London, 1969.

Chapter 12 - Food Processes

Note: Many of the food processes described below are very similar to processes with the same name in the chemical industry, and described in Chapter 11. When foods are involved, special cleanliness and sanitation provisions prevail, state and federal regulations are involved, and the equipment may be adapted to maintain a temperature that prevents degradation or unwanted cooking of the foodstuff. Regular cleaning and sanitizing procedures are required. Stainless steel and other materials that withstand cleaning and sanitizing are used and smooth, continuous surfaces are essential. Otherwise, many food processes parallel those used in chemical manufacture.

Food Processing - Food is processed to make it more digestible, more nutritious, more appealing in appearance and flavor, but most importantly, to make it safe to consume and to preserve it for future consumption. Food preservation has always been important because the time and place of food harvesting or slaughter usually does not coincide with the time and place of food need and consumption. Processes involving both heating and cooling are used to aid in preservation. Heating processes include preheating, blanching, cooking, baking, canning, sterilization, evaporation, and dehydration. Cooling processes include refrigeration, freezing, freeze drying, and freeze concentration. Other processes involve the addition of chemicals and other substances. Drying, fermentation, and irradiation are additional food processing methods in wide use.

A. Cleaning Raw Food Materials

Cleaning is used to remove contaminants from food material at the start of processing. Contaminants may include any of the following: soil, sand, pebbles, oil and grease, twigs, grass, leaves, stalks, other foliage, husks, pits, metal particles, hairs, insects and insect eggs or parts, pieces of string or rope, hairs, excreta, micro-organisms and herbicide or insecticide chemical spray residues or fertilizer residues. Two basic approaches are used for the removal of such materials from the food: dry cleaning methods and wet cleaning methods. Dry cleaning includes brushing, sieving or screening, abrasion, air flow (aspiration or winnowing), and magnetic separation. Wet cleaning methods include: spraying or soaking, filtering, sedimentation, flotation, pressure wash (fluming), and ultrasonic cleaning. Very often, a cleaning sequence includes both dry and wet cleaning operations.

Screening (sieving) is used to remove contaminants that are of a different size than the food material. (Screening is described in Chapter 11, section C8a.) Rotary drum screens are used to remove oversize material from powdered or granular foodstuffs such as sugar, flour or salt or to remove small contaminants such as dust, seeds, or grit from cereals.

Abrasion involves agitation of the food's raw material so that movement and impacts between food particles and between food and the moving parts of the equipment loosen contaminants that have adhered to the food. Screening or other operations to separate the contaminants from the food are then required.

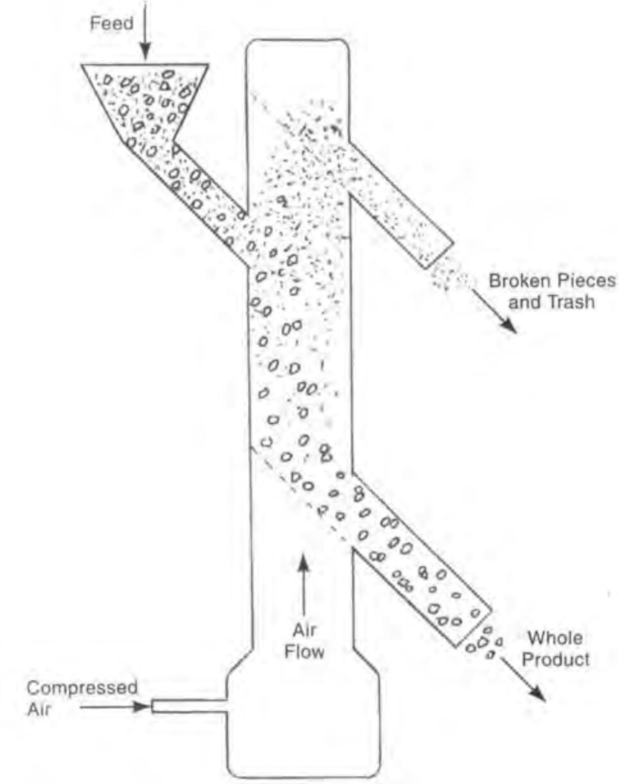

Fig. 12A The principle of air-flow separation. Broken pieces, dust, dirt and trash are more apt to be carried upward by the air flow and exit at the upper chute while the whole product settles in the chamber and is discharged at the lower exit chute. The illustration shows a single unit; production equipment may have two or three stages of separation.

Air-flow separation utilizes the differences in buoyancy of food and contaminant particles suspended in an upward air flow. A typical air-flow separator is shown schematically in Fig. 12A.

Magnetic separation is described in Chapter 11, section C8d.

Soaking and spraying are common cleaning methods for vegetables and fruits. Soaking is especially useful for root vegetables and other heavily-contaminated vegetables and is often a preliminary step before other cleaning. Dirt adhering to the vegetable is loosened by soaking so that some contaminants drop off. The operation is aided if there is flow or agitation of the soaking water and if it is heated, though the temperature must be low enough so that the food is not affected. Detergents may also be used, but they necessitate later rinsing. Spraying provides a more aggressive washing method. Fig. 12A-1 shows two production arrangements, one using a roller conveyor and the other a rotating drum to hold the food and move it under high-pressure spray heads.

Flotation methods may involve simple placement of the food material in water tanks to allow the heavier contaminants to settle to the bottom. When differences in buoyancy are not great enough, flowing water may be used in channels with weirs. The weirs catch the heavier material; the lighter material flows out of the channel with the water. Fig. 12A-2 illustrates such a device, used to remove dirt, plant debris, and stones from beans, peas, and dried fruits.[6] Froth flotation, and other methods described in Chapter 11, section C8b, may also be used with foodstuffs.

Ultrasonic cleaning, described in Chapter 8, section A2b, may be used to remove wax or grease from fruits, or soils from vegetables and eggs.

After wet cleaning, it may be necessary to remove excess water from the food material. One method is to place the material on agitated screens for a period, sometimes with an air blast to assist drying. When moisture removal requirements are strict, centrifuging (Chapter 11, section C7e) is a useful method.

B. Sorting and Grading of Foods

Sorting and grading are separation operations. Food pieces of like size, weight, shape, color, and quality characteristics, are removed from a mixed lot and collected in uniform or nearly-uniform groups. These operations often are performed manually, especially in small-quantity situations. For high production, automatic equipment is commonly utilized. Much current equipment uses machine-vision sensors, weight sensors, or other sensors to characterize each piece that passes it on a conveyor. The datum is sent to a computer processor that compares it with a standard and, depending on the comparison, may actuate a diversion mechanism that routes the piece to the proper channel, perhaps to a chute of rejected items. Sometimes, purely mechanical or non-computerized electromechanical devices, such as the size sorting systems illustrated in Fig. 12B, are used to separate items by size, weight or shape.

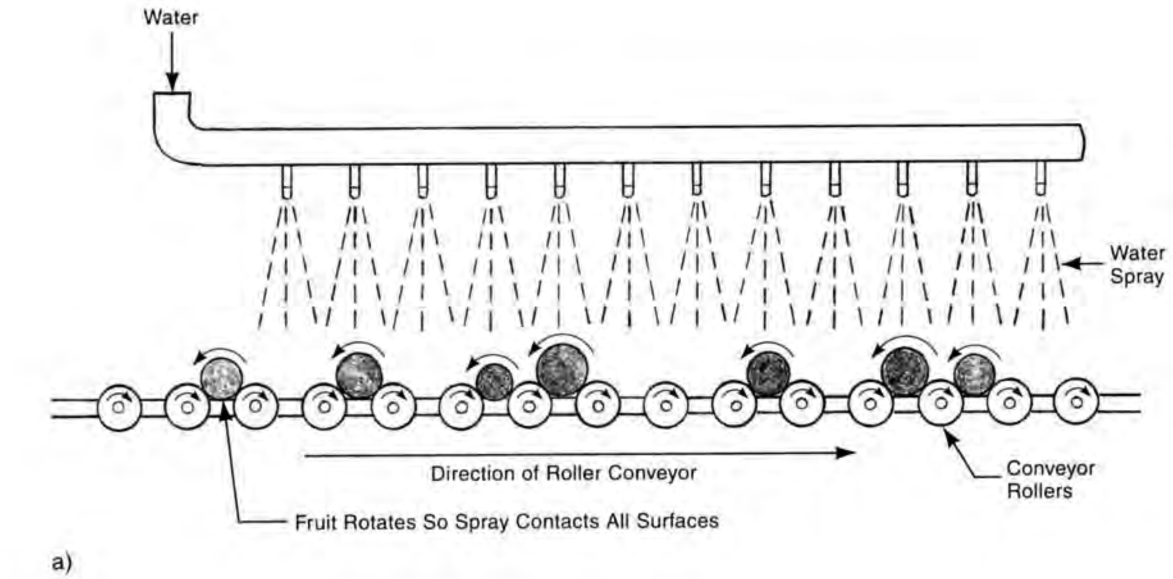

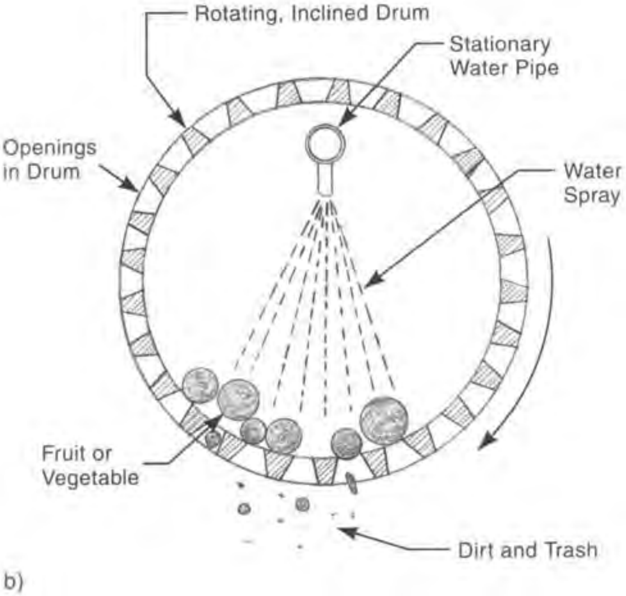

Fig. 12A-1 Spray washing of foods: a) moving conveyor to carry fruits or vegetables under a water spray head. The conveyor rollers are geared to revolve as the conveyor moves, causing the food pieces to rotate, and exposing all surfaces to the spray. b) view of the cross section of a spray drum washer. The drum is tilted and the dirty food pieces are fed from the upper end. As the drum rotates the pieces tumble and are exposed on all sides to the water spray. The dirt, trash and water leave the drum through slotted openings that are shaped so that trash or broken pieces, small enough to enter the slots, are not blocked from falling aside. The washed food pieces leave the drum at the lower end.

C. Size Reduction

Size reduction of pieces of food material may be needed for a number of reasons: to provide the desired size of the product pieces, to remove a shell or husk; to aid in a subsequent operation such as expression, dissolution, extraction, cooking, mixing or drying. Three basic means of reducing size are compression, impaction and attrition. Common methods are roll crushing, hammer milling, ball milling and disc attrition milling. In many cases, several stages of size reduction and several different methods may be involved, the number depending on the size of the pieces of feed material and the final particle size needed. The choice of method depends on the amount of size reduction, its purpose, and the hardness, structure, temperature sensitivity, and moisture content of the feed material.

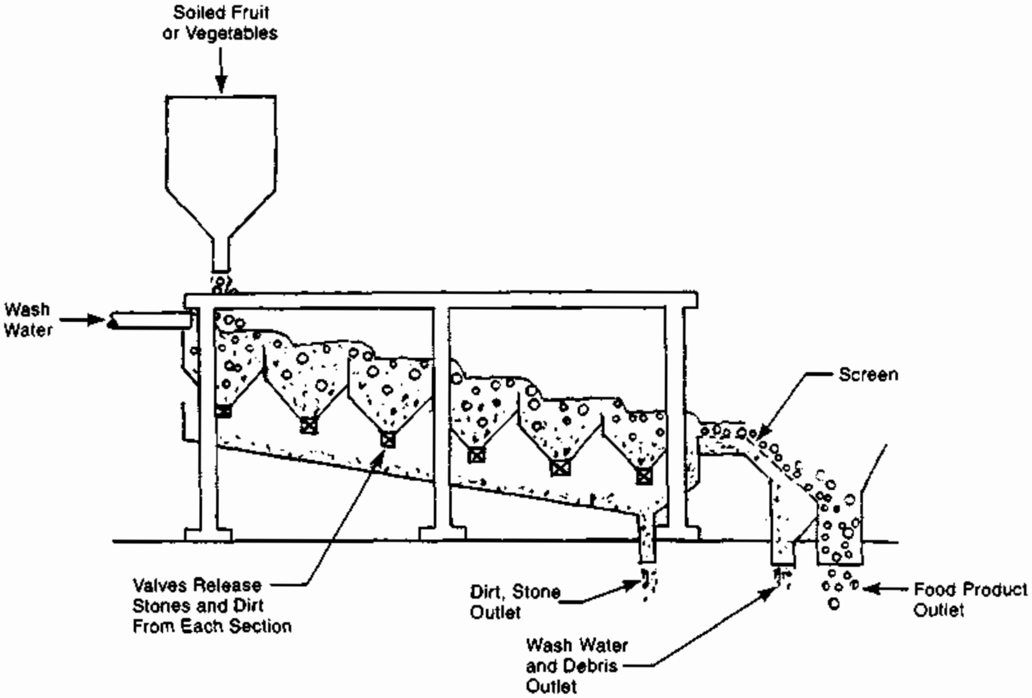

Fig. 12A-2 A flotation separation device to remove dirt, stones and debris from vegetables and fruits.

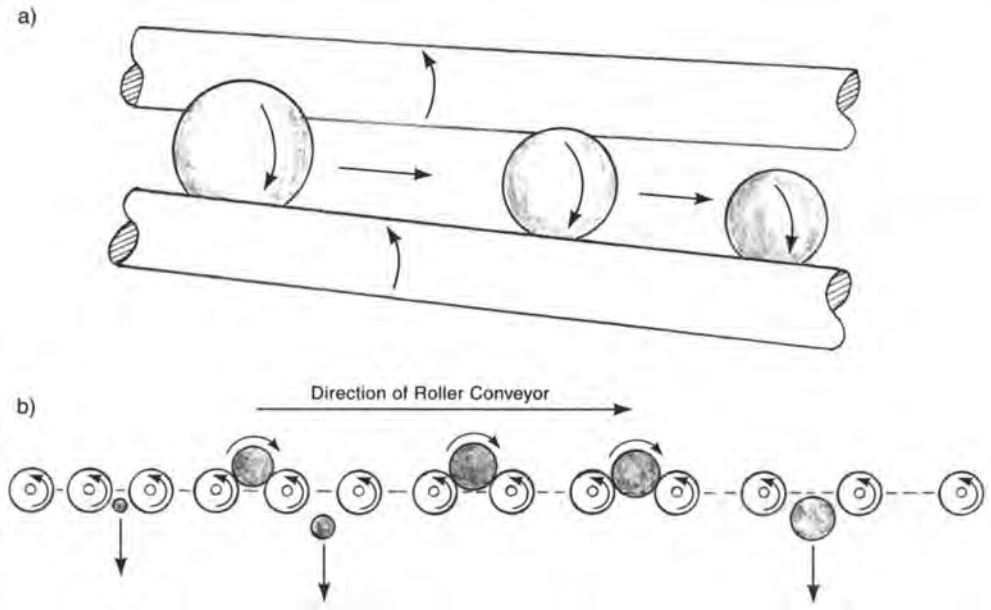

Fig. 12B Two systems for sorting fruit by size: a) apples or other near-round fruit move to the right (down hill) as they rotate. The gap between the rollers gradually increases so that the fruit falls between the rollers when it reaches a point where the gap is large enough. In view b), rollers of a roller conveyor gradually increase in spacing as the fruit moves to the right. When the gap is large enough, the fruit falls through the conveyor.

C1. ***roll crushing*** - utilizes two parallel steel rolls with a small space between them. Both rolls rotate on their axes towards the space that separates them. Food fed into that space is drawn into it and crushed by the weight and strength of the rolls. The roll surfaces may be smooth or grooved. If the rolls are operated at different rotational speeds, some shearing force is also applied. Fig. 11D2 in chapt. 11 illustrates roll crushing of minerals using the same principles and very similar equipment to that used for food materials. Roll crushing is used in the milling of wheat and the refining of chocolate.[6]

C2. ***hammer milling*** - is identical in method to impact milling of minerals, as illustrated in Fig. 11D2-1 (for large mineral pieces). Whether operating on minerals or food, the impact of hammers, attached with a pivot mount on a revolving disc, breaks the material into smaller pieces. Pieces in the mill may be struck repeatedly. The broken particles, when small enough to pass through the screen at the bottom of the impact chamber, are discharged from the machine. These machines have general application in the food industry, being used for various vegetable materials, especially those that are fibrous or sticky, and for crystalline solids. The grinding of sugars, dried milk, pepper, and spices are common applications.[6]

C3. ***ball milling (tumble milling)*** - is illustrated for minerals in Fig. 11D3. Steel balls in a slowly rotating cylinder are lifted and then fall against food material in the cylinder. About 50% of the content of the cylinder is material and 50% the steel balls. Both impact and shearing forces are generated, depending on how the balls strike the material and other balls. The speed of rotation of the cylinder is set to produce the best motion of the balls, which range in diameter from 1 to 6 in (25 to 150 mm). For some materials, particularly those that tend to be sticky, rods are used instead of balls. The rods are as long as the full length of the cylinder. Primarily, shearing forces are exerted on the food material.

C4. ***disc attrition milling*** - exerts high shear forces on the feed material. The food is fed between two rotating discs with horizontal axes, or between one rotating disc and a stationary disc surface. The discs are grooved and rotated at a high speed. The use of two rotating discs provides a higher surface speed because the discs rotate in opposite directions. The size of the gap between the discs is adjustable depending on the material processed. Fig. 12C4 shows both the single-rotating-disc and double-rotating-disc setups. This method is widely used in milling corn and rice, and in making cereal.[6]

C5. ***milling grain*** - is the operation that produces a finely ground meal (flour) from wheat and other grains. Whole wheat flour is milled from the entire wheat kernel including the outer shell (bran), the interior material (endosperm) and the innermost material (embryo or germ). White flour milling involves separation of the edible endosperm (which becomes white flour) from the bran and the germ. There are several steps in the milling process for white wheat flour: The seeds or kernels of the grain to be milled are first cleaned and separated from chaff, dirt, straw, sticks, pebbles, and other seeds. The grain is passed through a series of screens or perforated cylinders that separate the kernels from items of other sizes. This step may also classify the kernels by their size. The kernels are then scoured by passing them through a cylinder lined with emery. They are then tempered to adjust their moisture content to the optimum level by being moistened and washed if too dry, or dried gradually if too damp.

Grinding then takes place by passing the kernels through paired rollers. The rollers are grooved and rotate at different speeds. There is little actual grinding. When this step is complete the grain is reduced to three materials: 1) flour, the ground endosperm or nutritive tissue of the wheat kernel, some of which is in large nodules; 2) bran, the broken husks; and 3) middlings, a mixture of husk fragments and endosperm. These materials are separated by sifting. Air classification may also be used. The nodules of endosperm are again fed through a pair of rollers and then through a series of pairs of rollers with successively closer spacing. The final series of rollers are smooth surfaced. Sieving and further classification, known as "bolting" takes place between rolling operations. Bolting can be carried out by various methods including: plansifting which utilizes several sifting screens arranged one above the other; the use of a reel covered with bolting fabric that retains the middlings and lets the flour pass; air

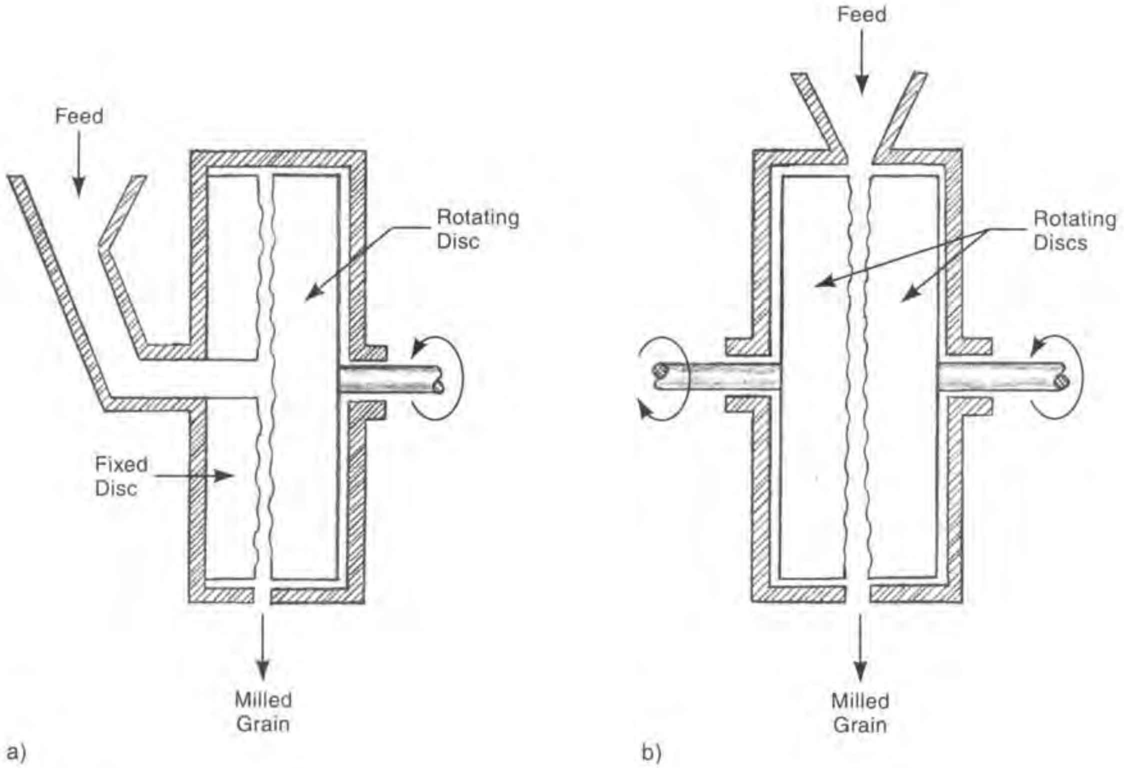

Fig. 12C4 Disc mills: a) a single-rotating-disc mill, b) a double-rotating-disc mill. The two discs rotate in opposite directions to provide faster milling.

classification; and centrifugal methods that also use reels. These processes further remove bran particles from the flour. Ground flour of various particle sizes is blended to provide the desired particle distribution in the finished flour. The blended flour is weighed into sacks or other containers. Methods for grains other than wheat are similar.

C5a. ***post-milling treatments*** - Bread flour may undergo several treatments after milling to enhance its nutritive value, to change its appearance or to improve its baking quality:

C5a1. ***altering protein content*** - Gluten, the protein of wheat flour, can be removed from the starch portion by washing the flour. A dough of flour and water is allowed to stand in water for a short period. This, and further washing, dissolves the starch and leaves the gluten. The gluten then can be added to other flour to enhance its protein content. Such flour is used for high-protein breads. The added gluten, in addition to its nutritive value, holds the flour grains together as the bread rises. Flour for cakes, biscuits, and cookies, that are softer, typically does not need as high a protein content.

C5a2. ***bleaching flour*** - The yellow color of some flour, undesirable for some consumers, is removed by bleaching. Natural bleaching occurs if the flour is allowed to age for several weeks. The aging whitens the flour and improves its baking qualities. Bleaching with chlorine dioxide gas, nitrogen trichloride, benzoyl peroxide, or nitrogen tetroxide, the most commonly used bleaching agents, provides equivalent effects much more quickly and is commonly used in flour production. Potassium bromate and benzoyl peroxide are other flour bleaching agents.

C5a3. ***enriching flour*** - involves the addition of thiamine (vitamin B_1), riboflavin (vitamin B_2), niacin and iron to white flour to provide vitamin content similar to that of whole flour.

D. Mixing

Various mixing methods are described and illustrated in Chapter 11. Most of the reasons for mixing - to provide a homogeneous blend of material, to distribute added ingredients uniformly, to disperse heating or cooling, to promote crystallization or dissolution, and to create emulsions - apply to foodstuffs as well or better than they do to non-food chemicals. The methods described in Chapter 11 apply well to mixing foodstuffs. These methods include: mixing liquids of low or medium viscosity with turbine or propeller mixers, as well as using the same equipment for mixing gases and liquids. These methods are described in sections 11G2 and 11G3 and are illustrated by Fig. 11G3 and 11G3-1. Mixing higher-viscosity liquids is also described in section 11G3 and illustrated in Fig. 11G3-2 and 11G3-3. Mixing liquids and solids together is described in section 11G4. Equipment for such mixing is illustrated in much of Fig. 11G5 which shows devices for mixing solids including those to which some liquid has been added. If the solids-liquid mixture tends to cake, i.e., if the liquid causes adhesion between solid particles in the mixture, the ribbon, screw and rotor muller mixers that are shown in Fig. 11G3-2 and 11G5(e), 11G5(f) and 11G5(h) are commonly used. For heavily viscous material, such as bread dough, the kneading mixer pictured in Fig. 11G5-2 is employed. The material is sheared, stretched, and folded to intermix different components. Another machine used for food mixing is the pan mixer shown in, two versions, in Fig. 12D. Screw-based extruders also may be effective in mixing viscous, dough-like material. See J5 below.

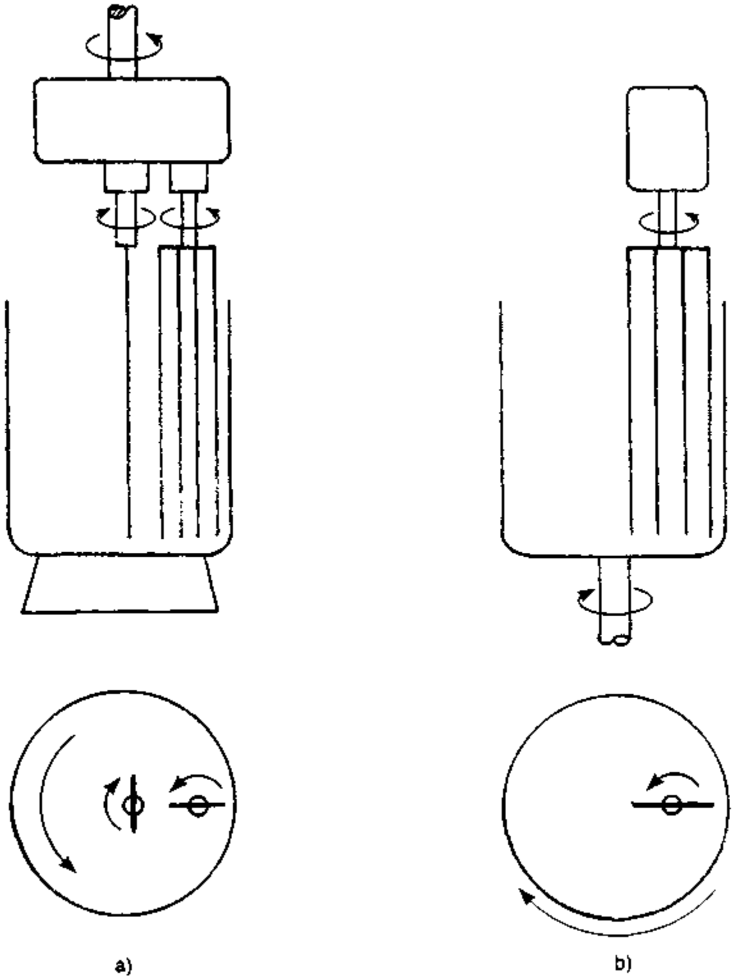

Fig. 12D Two varieties of pan mixer: a) stationary mixing container with two counter-rotating blades which also rotate on a central spindle; b) rotating mixing container with a single rotating mixing blade.

E. Separation Processes

These processes remove one or more ingredients from a mixture of food materials. The major methods are: filtration, expression, centrifugation, crystallization and extraction.

E1. ***filtration*** - is the separation of solid particles from a fluid by passing the mixture through a porous medium that allows passage of only the fluid. It is explained in Chapter 11, sections C7a and C7b. Major method variations are also described. The spectrum of filtration of food materials ranges from the removal of particles larger than 0.004 in (100 microns) in removing curds and casein from milk, to ultrafiltration and reverse osmosis with semipermeable membranes by which soluble starch, salt and sugar molecules are removed from water. Fig. 11C7b shows several types of filters; Fig. 11C7b-1 illustrates a typical horizontal filter press. The presses are used in many food industry applications including the filtering of oil extracted from seeds, and for removing bleaching compounds when the oils are bleached. They are also used in breweries for removing mash and yeast from brewery products and in wineries for the removal of yeast and bacteria from wine.[6] Fig. 11C7b-2 shows a continuous filtration machine and Fig. 11C7b-3, a rotary drum vacuum filter. The rotary drum vacuum filters are widely used in sugar production to filter juice from sugar cane and sugar beets. They are also used to filter gluten suspensions, to remove water from starch, and to clarify fruit juice[6]. Centrifugal filtration is discussed in section 11C7e and illustrated in Fig. 11C7e.

Three types of filtration, described in Chapter 11, are utilized in the food industry for: 1) filtering a slurry of solid material when the slurry contains a significant amount of solid particles - more than one or two percent. This process involves cake filtration as described in 11C7b. The solid material forms a cake on the feed side of the filter, and either the solid or liquid components, or both, may be utilized. 2) clarifying filtration of liquids containing only small amounts of solids where the objective is to obtain a clear liquid for use in food . 3) filtration to remove very fine particles, primarily microorganisms from a food liquid.[6] This is referred to as ultrafiltration or membrane separation. Ultrafiltration is discussed further in F3 below.

Other examples of filtration in the food industry include the clarification by filtration of vinegar, fruit juices, syrups, table oils, jellies and brines[6]. Filter aids (eg., flocculants) may be utilized in these operations. Applications of membrane filtration include vegetable oil refining where gums are removed and hexane is recovered, clarification of dextrose and purification of starch from corn refining, removal of yeast in breweries and distilleries, the desalting of molasses in sugar refining, the production of protein concentrates from various seeds, in the processing of animal by-products in meat packing and in making dehydrated eggs.[1]

E2. ***expression*** - is the removal of a liquid from a solid material through the application of pressure. It is an important method in food processing for removing oils and juices from fruits, nuts and vegetables. Expression is also has applications in the removal of liquids from various materials in the chemical industry and is described in Chapter 11, section C4.

Common food industry expression operations involve the removal of oils and fats from peanuts, coconuts, soy beans, sunflower seeds, cotton seeds, olives, and rendered fish and meat scraps. The extraction of juice from fruits and vegetables, including sugar cane and sorghum, is a major operation. Expression is used in the preparation of juices for sale to retail customers and to those who use it for ingredients in soft drinks, ice cream and other food products. Other uses are dewatering or solvent removal from filter cakes, removal of whey from cheese, and removal of fat from cocoa. The manufacture of wine involves expression of the juice of grapes. Some preliminary steps may be involved in expression of food liquids to break the cell walls of the fruit or vegetable being processed. Heating may be required. The expression operation may be performed on a batch basis, particularly with smaller production quantities or where a batch identification may be important (eg., some wine making). Continuous methods are used in other instances, particularly when production quantities are large. All expression equipment has some kind of perforated or porous material to hold back solid particles from the expressed liquid. Fig. 12E2 illustrates two batch

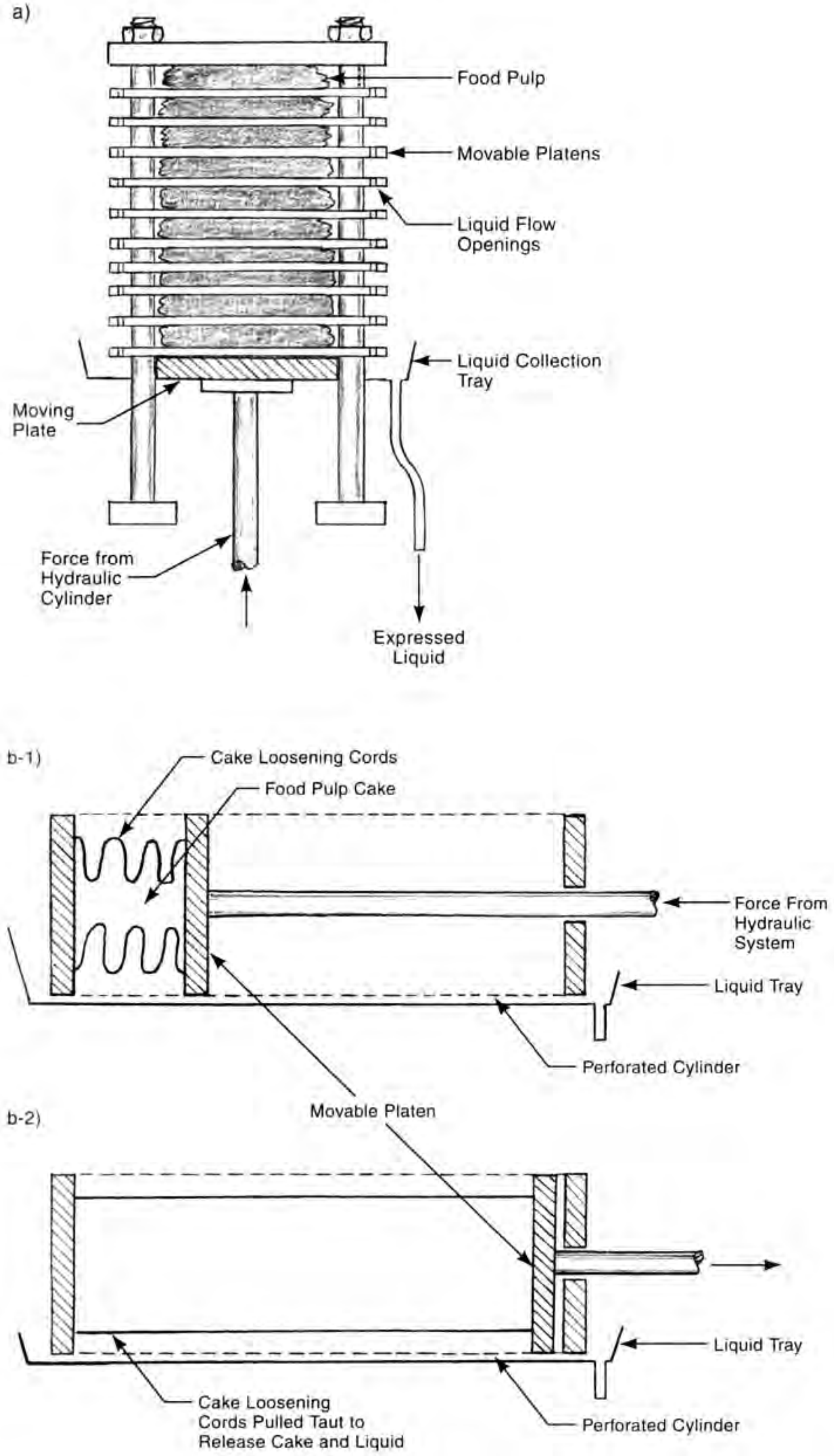

Fig. 12E2 Two batch methods for expression: a) plate press, b) cage press. b-1) closed position when food pulp is compressed. b-2) open position to release food pulp cake and liquid.

methods where hydraulic pressure is applied to the food pulp by pressing it between two platens. In the first illustration, a plate press is shown which includes a vertical stack of horizontal, grooved pressure plates. The second illustration shows a cage press that squeezes the food pulp between two vertical pressure platens. Fig. 12E2-1 shows two continuous methods, Including a continuous three-roll press used, among other applications, for expressing juice from sugar cane. Fig. 12E2-1 also shows a continuous screw press that is used for extraction of both oil and juice. Another continuous method involves a perforated moving belt holding the food material ("cake") and covered by a similar belt moving at the same speed. The two belts pass between two closely-spaced rollers which provide the extraction pressure. Centrifuging is also used to supplement expression in some olive oil and wine processing.

E3. ***centrifugation*** - is widely used in processing foods. The principles of operation are explained and specific types of centrifuges are described in Chapter 11, section C7e. Fig. 11C7e illustrates the operation schematically. In food processing (and in much chemical processing) there are four general uses of centrifugation: 1) separation of immiscible fluids, 2) centrifugal clarification of liquids, 3) desludging and 4) centrifugal filtration.

Fluid separation is used when there is a mixture of two immiscible liquids. The more dense liquid will gravitate to the walls of the centrifuge while the lighter liquid migrates to the space closer to the center of rotation. The movements take place strongly enough to separate the two liquids as long as the difference in density of the two is 3% or greater. The operation can take place continuously if the feed liquid is fed to the center of the centrifuge or to the zone where the two liquids tend to meet; the dense material is piped from the centrifuge through outlets next to the centrifuge wall; the lighter material is piped from a location closer to the center. This method is used to separate cream from milk and to strip small amounts of water that may be mixed with edible oils[6].

Centrifugal clarification is used when there is a small quantity, "a few percent or less"[6] of solids in a liquid, and when the solids have a higher density than the liquid. The solid particles gravitate to the walls of the centrifuge bowl leaving the liquid clear near the center of the bowl. Outlets are provided to permit both to flow into separate containers. The feed liquid enters the centrifuge at the bottom center.

Desludging is the removal of solids from a suspension when the portion of solids is greater than that processible by centrifugal clarification, ie., greater than 5 or 6% by weight[6]. When this high a percentage of solids is present, larger or more exit paths must be provided so that a substantial amount of solid particles is removed as the operation proceeds.

Centrifugal filtration, shown in Fig. 11C7e, uses centrifugal force rather than normal gravity or pressure on the feed slurry to drive the feed liquid through the filter. The centrifuge bowl is perforated on the sides and lined with filter material. However, the major filtration effect comes from the cake of solids that lines the bowl walls. Filtration of vegetable oils is one application of this method.

Tubular-bowl centrifuges are used in removing water from oil or fats from fish, vegetable, or animal sources, and in the clarification of syrups, cider, and fruit juices. Disc-bowl centrifuges are used to separate cream from milk, to refine edible oils and fats, and in the clarification of citrus oils and fruit juices. Other devices are used in separating coffee, tea, and cocoa slurries, removing fish oils and producing fish meal. The clarification of wort; beer, and ale; the dewatering of starches of corn, wheat, and rice; the recovery of vegetable and animal protein; the recovery of yeasts; the removal of small amounts of solids from beverages; the rendering of oil from vegetable or animal sources, and the refining of raw sugar to wash, dry, and recover sugar crystals, are all applications of tubular-bowl centrifuges[6].

E4. ***crystallization*** - is described in Chapter 11, section C5. Two methods, and the necessary equipment, are illustrated in Fig. 11C5 and 11C5-1. In food processing, crystallization may have two purposes: 1) to change a liquid product or ingredient into a more usable solid form, and 2) to separate two materials in a solution by crystallizing one of them. Either the material that crystallizes or the remaining liquid may be the desired material. Freeze concentration is a crystallization process used extensively in food processing. Water is removed from a number of liquid foods by reducing the temperature to the point where ice crystals form. The crystals are then separated from the liquid by centrifugation or filtering.

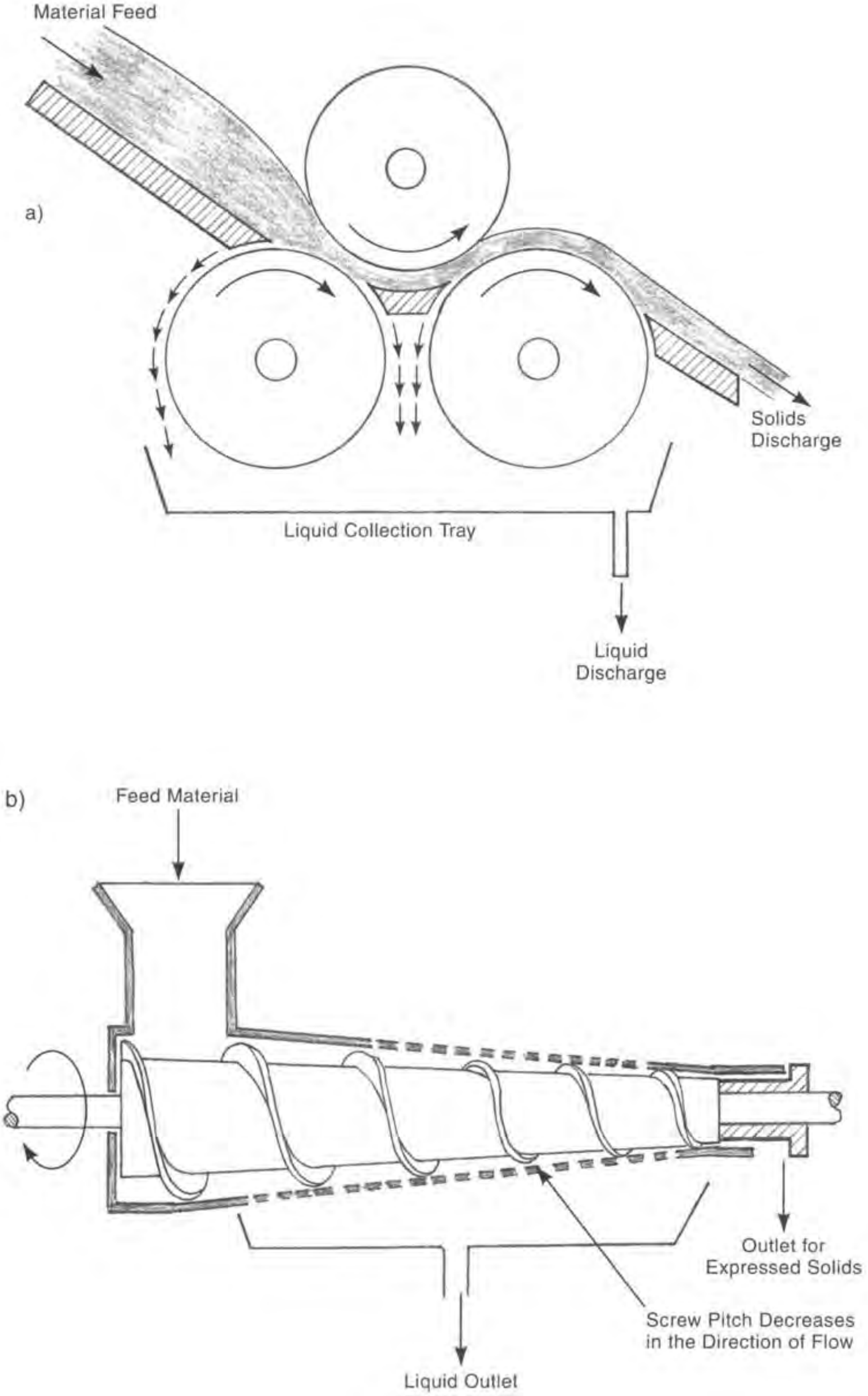

Fig. 12E2-1 Two continuous methods for expression: a) continuous three-roll press and b) screw press.

Another example of crystallizing to improve a liquid is the treatment of salad oils, in which higher melting-point glycerides in the oil are removed by crystallization. This prevents the oil from developing a cloudy appearance should it be stored at the low temperature at which these glycerides would crystalize. Oils are sometimes separated from fats by first dissolving the feed liquid in a suitable solvent from which the glyceride crystals are more easily formed and more completely separated. Acetone and hexane are two solvents sometimes used.[6]

Solid compounds made by crystallization and used in food processing include sugar (sucrose), lactose, salt, monosodium glutamate, and citric acid. With all these compounds, there is also a liquid residue of the feed liquid that is separated from the crystals. Crystallization is also used to produce a solid material where no separation from a residue liquid is involved. Examples of this second situation are the production of ice cream and other frozen foods, sweetened condensed milk, butter, chocolate, margarine, and some fondants and candies. Many of these products require the crystals to be quite small, to ensure smoothness in the finished product. To produce the small crystals, the material to be crystallized is cooled rapidly to a temperature range where the crystallization occurs rapidly, but the crystals are broken up or kept small by stirring the mixture or scraping the surface of the heat exchanger used to provide the cooling. This breaks up the existing crystals and provides more nuclei for additional crystallization. Manufacture of ice cream, margarine, and butter all involve this approach. Fig. 12E4 provides a simplified illustration of equipment used for the scraped-surface method.

E5. ***extraction*** - is reviewed at some length in Chapter 11, section C3. It is applicable to foods as well as chemicals, and is carried out when some component of a food material can be removed from it by dissolving the component in a solvent. The process requires a solvent that selectively dissolves the target component but not the other components of the food material. The method can

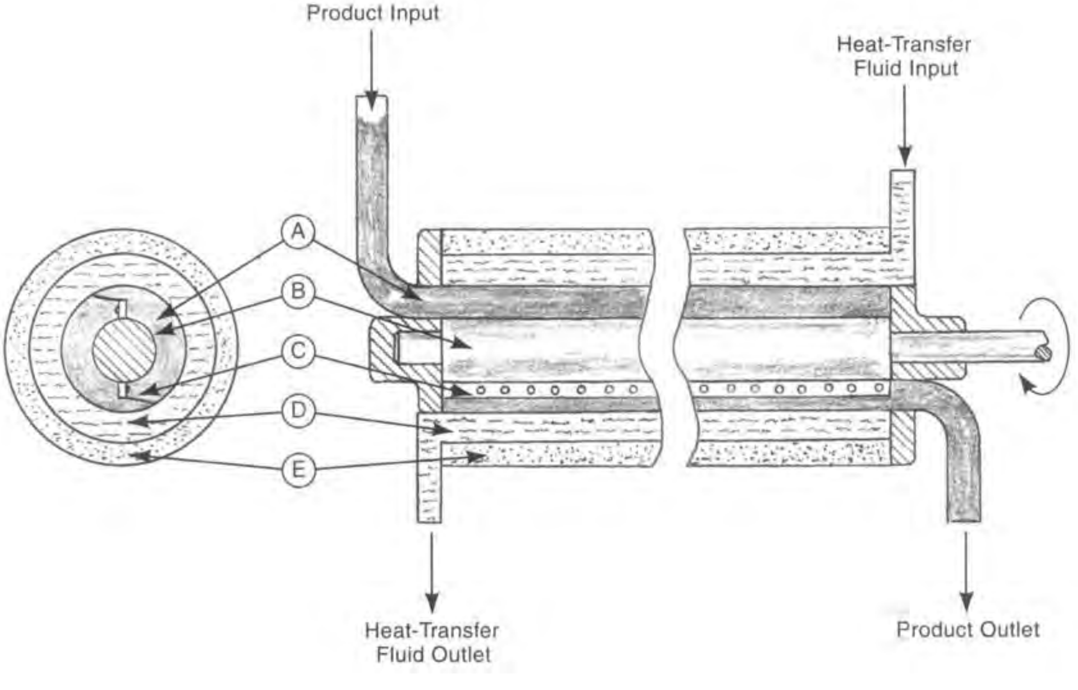

Fig. 12E4 Scraped-surface heat exchanger in two cross-sectional views: (A) product, (B) rotating shaft, C) scraper blades, (D) heat-transfer fluid, (E) insulation.

be used to extract a liquids from another liquid and some material from a solid. In the latter case, extraction is sometimes referred to as leaching. The process can be carried out on either a batch, or continuous basis. Solvents used for extraction in food processing include water, hexane, and other organic solvents and supercritical fluids, notably carbon dioxide. Common food processing extraction operations include: removal of cholesterol from milk fat with carbon dioxide, removal of oleic acid from cottonseed oil with propane, olive oil from pressed olives with hexane, sucrose from sugar beets with water, caffeine from green coffee beans with carbon dioxide, lemon oil from lemon peel with carbon dioxide, and alpha acids from hops with carbon dioxide[1]. After extraction, the solvent and the solute must be separated. Distillation, precipitation, membrane separation, evaporation, or crystallization are the methods used. The solvent can then be reused. Fig 11C3 shows extraction schematically, and Fig. 11C3-1 illustrates extraction from a solid feed material.

F. Concentration

Concentration of liquid foods is an important operation. It is performed to make storage and shipment more convenient and compact, to reduce packaging volume and cost, to induce texture and flavor improvements, and to facilitate further operations such as drying and crystallization. Evaporation, freeze concentration, reverse osmosis, and ultrafiltration are the principal methods used.

F1. ***evaporation*** - the conversion of a liquid to a gas, is reviewed in Chapter 11, section C7g. The methods described are applicable to the evaporation of food liquids. With foods, the liquid to be evaporated is normally water. Fig. 11C7g shows a simple kettle evaporator that could be used for evaporation of batches of food liquids. However, in production situations, evaporation takes place in boiler-like devices, where the liquid product to be evaporated flows through or alongside a series of heat-transfer tubes (shell and tube devices), or plates in a chamber. Steam or other heated vapor provides the necessary heat. As the liquid in the device absorbs heat from the steam-heated surfaces, some of the water content of the food is evaporated. Fig. 11C7g-1 shows several different arrangements for production evaporating equipment. Plate evaporators, similar to the plate heat exchange unit illustrated in Fig. 11J-2, are used in food liquid evaporation.

With short-tube evaporators, the tube arrangement may be vertical or horizontal, and the feed inlet may be either above or below the heat exchange tubes. Boiling and density differences create circulation of the feed liquid through the array of tubes and the heavier, concentrated liquid tends to settle to the bottom of the chamber and be discharged, while the vapor rises and leaves the chamber from the top. Fig. 11C7g-1, view d, illustrates this operation. Often, with this type of equipment, successive stages of evaporation are used. Partially-concentrated liquid from one evaporator is pumped into a second unit and, sometimes, the concentrate from the second evaporator is fed to a third unit. Later stage equipment is run at lower pressures and temperatures so that heated vapor evaporated from the food liquid provides heat for further evaporation. Short-tube evaporators are used in refining cane and beet sugar to concentrate the syrup prior to crystallization. Sometimes, with the addition of circulating mixers, crystallization takes place within the evaporator. These evaporators are used in the concentration of fruit juices and malt extract.

Long-tube vertical evaporators are extensively used in the food industry. These devices have tubular heat exchangers that are as much as 40 ft (12 m) in length. With the rising film evaporator, the preheated feed liquid enters at the bottom of the vessel and flows upward inside the heat exchanger tubes. The heat of the tubes vaporizes some of the liquid, and both the bubbles of vapor and the more concentrated liquid flow upward. At the top of the tube array, the mixture of liquid and vapor is drawn off to a cyclone separator that divides the mixture into vapor and concentrated liquid components. The vapor is drawn off and the liquid falls to the bottom of the cyclone where it exits the system. In the falling film evaporator, the feed liquid enters at the top of the tube array, flows downward through the tubes and partially vaporizes due to the heat transferred by the tubes' inner surfaces. The mixture of liquid and vapor is drawn off and separated. Fig. 11C7g-1, view h, illustrates the functioning of a long-tube, falling-film system. The falling-film method is advantageous for viscous liquids. It can be operated under a vacuum, which is necessary for foods that are sensitive to high temperatures.

Some common food evaporation operations are the production of orange juice concentrate and condensed milk. Concentration of sugar cane juice, prior to the crystallization of the sugar from the concentrated solution, is another application. Evaporation is used in the concentration of fruit juices for jellies, jams, and candies, and the concentration of milk prior to spray drying in making powdered milk. Tomato paste and other vegetable pastes and purees are made by evaporating water from the juices.

F2. ***freeze concentration*** - reduces the water content of liquid food by lowering the temperature of the liquid until ice crystals form. The ice crystals tend to be free of the non-water constituents of the liquid and, when they are removed from the liquid by filtration or centrifugation, a more concentrated liquid results. The liquid food is normally processed in a refrigerated scraped-surface heat exchanger. Small ice crystals form from the water content of the liquid. The liquid, with small ice crystals, then passes to a "ripening chamber". Ripening forms larger crystals and these are separated from the liquid. With the aid of centrifuging, concentrations from a 50 to 60% reduction of the original liquid can be made[1]. The process is more expensive than evaporation and yields a limited amount of concentration but it avoids heat degradation of the food. It also does not cause the loss of volatile aromas and flavors that can occur when evaporation is used to effect concentration. Another factor is the small loss of the concentrated liquid on the surfaces and, to a minor degree, internally in the ice crystals that are formed. Some processes use multiple stages of freezing including washing of the crystals with melt water to recover more of the desired liquid. Multiple stages of crystallization and centrifugation may be used in some freeze concentration operations to remove the freezable component more completely.

Freeze concentration is used to increase the alcoholic content of beverages. One example is the production of "ice beer". The method is also used to adjust the alcoholic content of wine batches, to concentrate vinegar, milk and fruit juices and to concentrate liquid foods prior to freeze drying. Tea, coffee and aroma extracts are made using this method.[8]

Historic non-industrial uses of freeze concentration have included the enhancement of the alcoholic content of hard apple cider and the use of freezing by American Indians to make maple syrup from maple tree sap.

F3. ***reverse osmosis and ultrafiltration*** - *Reverse osmosis* is a membrane separation process related to the membrane separation processes described in Chapter 11, section C7c. It uses pressure to force water through permeable membranes leaving a more concentrated food liquid behind. When two liquid solutions are separated by a semipermeable membrane, without added pressure, natural osmotic pressure of solutions will lead the solvent to pass through the membrane in the direction that dilutes the more concentrated solution. However, when sufficient pressure is applied to the more concentrated solution to overcome the natural osmotic pressure difference, the osmosis is reversed and the solvent passes through the membrane from the more concentrated to the less concentrated solution. Thus, the more concentrated solution becomes further concentrated. Fig. 12F3 illustrates the principles of osmosis and reverse osmosis. An advantage of the process is that no heat is required so that temperature-sensitive food liquids are not adversely affected. The process is used to concentrate milk, whey, and some extracts. Apple juice and maple sap are sometimes preconcentrated by this method prior to evaporation[1].

Ultrafiltration is very similar to reverse osmosis. It differs in that it is usable when the dissolved molecules are relatively large (molecular weights greater than 500[7] and up to 300,000 and typical sizes of 0.002 to 0.2 microns[9]), and pressures are relatively low. Large molecules in solution do not pass through the membrane, but small molecules in solution pass through with the water. A crossflow arrangement for the solution is usual to avoid clogging the membrane. Polysulfone or cellulose acetate plastics are the common membrane materials. Ultrafiltration is used in cheese making to concentrate protein.

The limit of concentration of reverse osmosis and ultrafiltration is about a 20% reduction in solvent content.

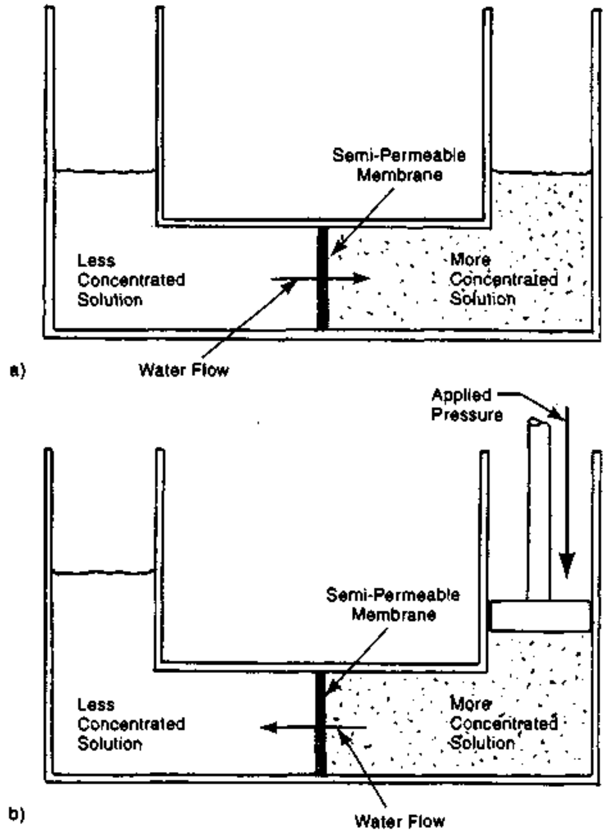

Fig. 12F3 Principles of osmosis and reverse osmosis: a) Natural osmotic pressure forces the solvent (water) through the membrane toward the more-concentrated solution, causing it to be less concentrated, b) When the more-concentrated solution is pressurized enough to overcome and exceed the natural osmotic pressure, osmosis is reversed, and the water is forced through the membrane toward the less concentrated solution, causing the solution from which it flows to become more concentrated.

G. Thermal Processing of Foods

Thermal processing involves heating the food or food material to insure that it is in a healthful condition, to prevent spoilage, and to aid in further processing to make the food more digestible or pleasing in taste.

Heat may be supplied by the combustion of solid, liquid, or gaseous fuels, by electrical methods including resistance heating, dielectric heating, or microwave heating. Radiation, conduction and convection may be involved in transferring heat to the food material.

In heat processing to prevent spoilage, the purpose is to kill any resident food-spoiling organisms. There is some loss of flavor and nutritional value when foods are heated to the extent needed, so careful controls are usually required to gain the necessary sterilization while not causing too much food degradation. The food's packaging and the expected later storage conditions must be considered. For some foods, the operation is performed in a pressurized environment. Cooling immediately after the heating stage is common in order to avoid quality deterioration.

Thermal processing operations include: blanching, pasteurizing, heat sterilization for canning and aseptic processing, cooking (various methods), and baking. In all these processes, heat is applied to the food material to bring it to the necessary temperature for a specified period of time. Several different methods may be used, depending on the nature and condition of the food and the results wanted.

G1. ***blanching*** - is an important operation that involves immersion of vegetables and some fruits in hot water or steam, prior to canning, freezing, or other food preservation operations. Blanching inactivates enzymes that may impair flavor, color and nutrient value during frozen storage or other processing. It also shrinks and wilts the product, which may facilitate proper filling of the container used. Some additional cleaning benefit may also be achieved. The food, however, can lose some heat-sensitive or water-soluble vitamins or nutrients. If the operation is not performed on foods that are heated insufficiently in later processing (for example, foods that are processed by low-temperature vacuum drying or freeze drying), the foods may develop undesirable flavors, colors or odors. The operation is frequently performed on carrots, peas, spinach, and beets before canning. It is also performed before freezing or dehydrating. Blanching temperature is generally at the water boiling point or slightly lower. Foods are heated rapidly and held to this temperature for a period of from about 50 seconds to 10 minutes. They are then cooled rapidly or otherwise processed. In industrial food processes, the operation is performed in equipment consisting either of a rotating perforated drum, a pipe flume or a trough. A screw or other conveyor may be used to move the vegetables or fruit through the equipment.

G2. ***pasteurization*** - is a process for destroying molds, yeasts, and vegetative microorganisms. It is a relatively mild process, less severe than sterilization. Bacterial spores are not inactivated nor are all enzymes that could cause food spoilage in later storage. However, the temperatures are low enough so that flavor, chemical composition or nutritional properties are not harmed. A typical heating cycle for milk is a temperature of 145°F (63°C) for 30 minutes. Another milk pasteurization cycle is heating to a higher temperature, 162°F (72°C) for 15 seconds. Time and temperatures vary with the food, the likely microorganisms present and the use of the food. The pH of the food is a factor since it influences what microorganisms are present. Cooling should take place immediately following the heating phase so that the flavor and nutritional values of the food are not impaired. Still a further process variation for milk is ultra-high-temperature pasteurization (UHT), that subjects the milk (or cream) to a temperature of 280 to 302°F (138 to 150°C) for two seconds or more. If packaged in hermetically-sealed, sterile containers, milk thus treated can be stored without refrigeration for several months.[2] The pasteurization process can be performed on either a batch or continuous basis. Batch equipment usually uses hot water or steam at atmospheric pressure as a source of heat. Agitation of the liquid being processed, eg., milk, is used to insure uniform heating. Plate-type heat exchangers are often employed because such a design provides rapid heat transfer. (See Fig. 11J-2.) These heat exchangers employ multiple plates separated by gaskets. The food liquid and the heating liquid occupy alternate spaces between the plates. Continuous-flow pasteurizers use regenerative systems to minimize energy costs. In this approach, heated pasteurized milk transfers heat to the cool incoming milk. Other separate stages of continuous-flow equipment provide further heating, holding at the pasteurization temperature, and cooling. In addition to milk and cream, fruit juices, canned fruits, beer, wine, ice-cream, and liquid eggs are pasteurized. Bread and cakes may be pasteurized using microwaves as the heat source.

G3. ***heat sterilization*** - is a normal part of the *canning* process further described below. Its purpose is to kill pathogenic organisms and provide necessary storage life for the canned food. The food, which is already packed and sealed in metal cans or containers of glass or plastic-foil laminate, is heated, usually by steam or hot water. Both batch and continuous systems are in use. In a continuous system, the cans or other containers are conveyed through heating and cooling chambers. Batch systems frequently operate under computer control. If a plastic-foil pouch is involved, the operation takes place under pressure to counteract the forces of heat expansion that might otherwise cause the pouch to rupture. Glass containers may be similarly protected. The temperature used in the operation depends on the pH (acidity) of the food. Typical temperatures for low-acid foods are in the range of 220 to 250°F (105 to 120°C). Low-acid foods (eg., crabmeat, olives, eggs, milk, corn, chicken, codfish and beef) require more aggressive heat treatment than high acid foods (eg., lemon juice, cranberry juice, relish, pickles grapefruit, apples and sauerkraut). For fruits and other high-acid foods, the temperatures are typically from 180 to 212°F (82 to 100°C). Cooling immediately follows the heat phase to avoid changes in the taste or nutritional value of the food. Careful control of both temperature and time is maintained in the process to avoid both overheating and underheating.

There are other systems that use higher temperatures and shorter periods under heat. These systems are referred to as HTST (high-temperature, short-time) processes, and typically have two-phase heating cycles. The first phase may involve heating to a temperature of about 150 to 185°F (65 to 85°C) for 5 to 10 minutes; the second phase heats to about 260 to 300°F (125 to 150°C) for only 3 to 30 seconds. The first phase is intended to inactivate enzymes; the second to inactivate microorganisms. The HTST approach is limited to liquid and near-liquid foods. One such process is applicable to soups, purees, yogurt, sour cream and other milk products. The food is sterilized in a heat exchanger before canning; the cans and lids are separately sterilized and the can is filled and closed inside a sterile chamber. Superheated steam provides the heat.

G4. ***canning*** - utilizes heat sterilization to preserve food indefinitely. The food, which has been carefully prepared to prevent contamination, is placed in a container that is sealed and then subjected to the elevated temperature of sterilization.

After a period of time, the container is cooled. The sealed container prevents microorganisms from contacting, spoiling and otherwise contaminating the canned food.

The common tin can (made from steel with a thin interior coating of tin or enamel, depending on the food contained) is inexpensive and durable, and provides a seal against re-exposure to microorganisms. It is the most common container for canning but glass and, more recently, plastics, are also used. Almost all common foods—fruits, vegetables, meats, and sea foods - are canned commercially.

Food preparation prior to canning involves a number of possible operations. They include cleaning, grading, sorting, husking, washing, peeling, cutting, sectioning, coring, pitting, slicing, trimming, soaking, evaporating, and blanching. Which operations are performed depends on the nature of the food being processed. Much of this work is done by automatic machinery. When some of the operations are performed manually, they are usually done on conveyor lines that are synchronized with the automatic sterilizing and canning equipment. Cleaning is an important operation. It may involve high pressure water sprays, water immersion and the use of various special scrubbing apparatus, depending on the nature of the food product. Sometimes air blasts are employed to remove foreign material prior to washing.

The canning process, after food preparation, includes the following sequence of container operations: washing the cans, preheating the food, filling the cans, exhausting air from the cans, capping, sealing and heat-processing the cans and their contents, cooling, labeling, packing in multiple-unit cartons and storage. In commercial canning, these operations are usually highly automated. The food to be canned is usually preheated to insure uniform initial temperature before further heat processing and to aid in producing a vacuum when the can is sealed. Liquid or semi-liquid foods are preheated in tubular heat exchangers that may be equipped with screw conveyors. Steam is the usual heating medium.

Various automatic machines used in the canning sequence are usually interconnected by conveyors so that the cans travel from machine to machine through the entire process without human handling. For large scale operations, the machine pace is quite rapid. Filling is normally automatic but may be manual or partly manual, most notably with fruits and some larger vegetables, to insure filling with the proper amount. After filling, cans may be evacuated of any trapped air or gases, by heating the filled cans in hot water baths or by steam in exhaust chambers. Thermal expansion of the food leaves little or no room for atmosphere in the can as it is sealed. Sealing follows and some sealing machines are equipped to draw any trapped air or gas from the can, if necessary. Lids are placed automatically by the can sealing equipment and the can and cover edges are rolled together with a double seam. There is a thin layer of flexible material near the can edge which acts as a gasket. Some sealing is also performed in a chamber containing an inert gas - nitrogen, carbon dioxide or helium.

The sealed can then undergoes heat sterilization of the contents to specified temperature and holding time as described in G3 above. One continuous method uses horizontal cylindrical pressurized retorts. The cans are conveyed into the retort through a rotary transfer valve that maintains the pressure inside the retort and prevents loss of steam. The cans roll on a spiral track on the interior of the cylinder, helping to insure that the heat is well distributed to their contents. A full, high-production arrangement may have several stages of this equipment in series so that the cans are heated and then cooled under the proper temperature and pressure. Fig. 12G4 illustrates how such machines operate.

Following the heating operation, the cans are cooled in air or water to about 100°F (38°C) and then are labeled and packed. Contraction of the contents of the cans during cooling after sterilization produces a partial vacuum in the cans. Labeling is an automatic operation performed at high speed. Packing in cartons is also normally a machine operation but is manual in some situations.

G5. ***aseptic processing*** - involves both sterilization and packaging carried out at the same time. A sterile product is placed in a sterile container in such a way that microorganisms cannot reenter the product. Microorganism action can be prevented for several years if the process is carried out correctly. The process may involve metal canning but is also usable with various plastic- and paper-based containers. Milk and juice are processed by this method and can be stored at room temperature. The operation is usually carried out with high speed

Previous Page

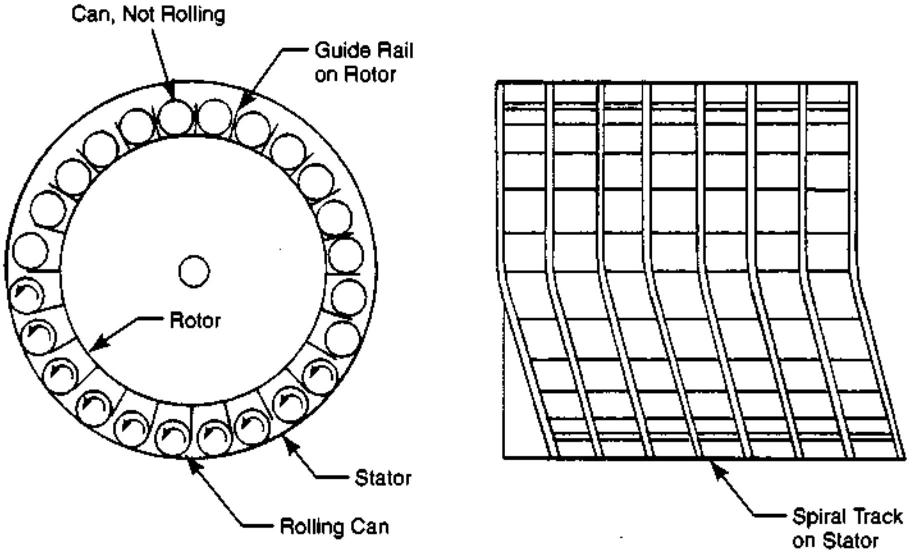

Fig. 12G4 End and side interior views showing the principle of operation of an automatic continuous rotary canning sterilizer. The cans are carried inside a heated, pressurized cylindrical vessel. As they are moved by rails on a rotating wheel, while in the lower portion of the cylindrical vessel, they roll against the cylinder walls, helping to mix the cans' contents. When they are rolling, they are shifted by spiral tracks to the next position and gradually from one end of the sterilizer to the other.

specialized machinery that sterilizes the product and the container. The machinery forms, fills and seals the container, all under sterile conditions, although, sometimes, sterilization of the product takes place at another location.

Sterilization is often by the UHT (ultrahigh-temperature/short time) method that sterilizes the food product and the containers at higher-than-normal-sterilizing temperatures for a short time span. When the container is glass or metal, the container is sterilized with superheated steam at 300°F (150°C) or higher. The food is preheated and then sterilized by heating to a similar high temperature for a short specified holding time followed by rapid cooling. The container is filled and sealed. All these operations take place in a sterile chamber. Glass containers must be heated and cooled at slow enough rates to avoid cracking. Plastic and other non-heat-resistant containers are sterilized with hydrogen peroxide and then dried with hot air and radiant heat. Filling takes place in a sterilized filling station, usually sterilized with hydrogen peroxide for a period of time. Superheated steam is another sterilizing medium. After one of these methods, the machine is dried with sterilized air. Sterile air, made sterile by filtering through microfilters that screen out microorganisms continually bathes the mechanisms and maintains a positive pressure in the machine so that contaminants cannot enter the machine area. The process is also used in the storage and handling of bulk quantities of sterilized food ingredients. Containers up to the size of 55 gallon drums, and even railroad tank cars filled with tomato paste, fruit purees and other liquid concentrates may be used. Special aseptic valves and handling equipment are employed when the sterilized ingredients are transferred from one storage tank or container to another.

G6. ***cooking*** - is the preparation of food for consumption by means of heat. Heating is undertaken to improve the texture, flavor, tenderness, form, or appearance of food or to kill pathogenic microorganisms. There are many methods by which the heating takes place: immersion in a heated or boiling liquid (water, wine, stock) for boiling, poaching, or stewing; immersion in oil or hot fats for sautéing, frying, or deep-fat frying (French frying); steaming; and baking, roasting and broiling, all of which utilize dry heat. Batch baking and roasting take place in an enclosed oven and surround the food with uniform air temperature. With broiling the heating is more intense, usually on one side at a time and, with meat, it sears the surfaces and seals in the juices. Heat for cooking may be applied by any number of ways: flame from a gaseous, liquid or solid fuel; electrical resistance; microwave. The heat is transferred to the food by radiation, convection, conduction or induction (microwave).

To kill pathogens, meat should be heated throughout to a temperature of at least 160°F (70°C) for at least two minutes.[1]

In deep fat frying, the oil temperature is typically 340 to 360°F (170 to 180°C). Typical deep-fried foods, in addition to French-fried potatoes, are doughnuts, potato chips, and fried noodles.

In mass-production applications, much cooking is done on a continuous basis. A conveyor moves the foodstuffs continuously through an oven or other cooking device. Continuous oven systems may include areas that, by design, have different temperatures and humidities, in order to produce the desired properties in baked food. By controlling the conveyor speed, the size of the heating zone and the temperatures, the desired amount of cooking can be assured.

Batch operations are more common because many food products are made in smaller quantities or to order. Batch ovens are sometimes used with a partial vacuum when it is important not to raise the foodstuff to too high a temperature. In such situations, the dwell time in the oven is increased.

G7. ***baking*** - the cooking of flour-bearing foods is an important operation. In foods raised with yeast or baking powder, baking provides heat for the chemical reactions involved. Baking also provides browning, oxidation, volatilization, starch gelatinization, esterification and other physical and chemical reactions that create bread, cake, biscuits, muffins and other baked goods from a paste mixture of flour and other ingredients. Typical baking temperatures are in the range of 240-300°F (115 to 150°C). The food is heated from contact with heated air and radiation from heated oven walls. High-production baking is done on a continuous basis in a tunnel oven, a long chamber as long as 200 ft (60 m) in length, open at both ends. A metal belt conveyor moves the foodstuff through the tunnel which contains several independent heated sections. Heat is usually supplied by gas flames inside or outside the sections, but steam, oil flame, electricity or electronic methods may also may be used. Some oven sections may be humidified and humidity-controlled to ensure proper moisture content in the baked goods. By the time the products reach the end of the tunnel, they are properly baked. Baked goods of controlled shape are conveyed through the oven in pans. Products with toppings, fillings, and icings. have these items added at the proper time by dispensing machines that apply the material as the product passes to or from the tunnel oven. There is a cooling cycle after baking. Cooling is generally at a slow rate using room temperature air rather than refrigeration. This allows the moisture in the product to distribute itself evenly and prevents later condensation of moisture on the crust, which would lead to more rapid spoilage. Packaging usually follows immediately or soon after cooling. Since baked products are distributed with the expectation of short shelf lives, packaging is usually simple, consisting of plastic or paper wrappings, or simple chipboard and cellophane boxes. Much of the packaging is done automatically for high-volume consumer baked goods.

H. Dehydration and Drying

Dehydration and drying are two food preservation techniques that remove moisture from food. They differ from each other in the purpose of the operation. *Dehydration* is a technique that removes moisture from food in such a manner that, when water is re-added, the food will be returned to approximately its pre-dried state. In contrast, *drying* involves removal of moisture for preservation of the foodstuff without the expectation of restoration. Dried fruit and other foods will not return to their predried condition if water is added to them, but dehydrated soup and coffee are reconstructed when water is added. Both methods have the same effect of inhibiting the growth of microorganisms and thereby preserving the food. Both these methods allow longer storage of the food processed, simplified package requirements and reduced weights for shipping and handling.

Methods for removing moisture from foodstuffs range from what probably is the oldest method, sun drying (which is still used), to more sophisticated current methods. Some of these methods are outlined above in the material on concentration. (See sect. 12F.) The common method of removing moisture from solid foods involves subjecting the food to a flow of hot air. Cabinet, tunnel, and kiln dryers are three prevalent types of equipment used. A cabinet/compartment/tray dryer is shown in Fig. 12H. These units are useful for drying vegetables and fruits and various other foods when quantities are not great. Tunnel, rotary drum and fluidized-bed dryers are other methods used. Fig 11C12 shows a tunnel dryer with a mesh conveyor that allows passage of heated air to the foodstuff. These devices are useful for larger-scale production as are the rotary drum dryers illustrated in Fig. 11C12-1. (A different drying method using one or two drums is described below in section H3.) Liquid foods, such as coffee, milk and fruit juice, are dehydrated by spray drying or vacuum drying.

The purpose of both drying and dehydration is to remove sufficient moisture so that microorganism growth does not occur, for the prevention of enzyme actions, and for retarding or preventing other chemical reactions. After dehydration, the food is packaged in moisture-proof packages. The amount of moisture in the food after drying or dehydration varies with the food, the use intended, and the packaging. 5% moisture content is a typical value. Vegetables, fruits, meats and fish may be processed by drying. Milk, including whole milk, skim milk and buttermilk, soup, eggs, yeast, pasta, potatoes, tea and coffee are well suited to dehydration. Typically, these foods, after dehydration, occupy only 1/15 the space required originally or after they are reconstituted[2]. Drying and dehydration methods that shorten the drying time help avoid degradation of texture and flavor as a result of the operation. (Also see section C12 in chapt 11.)

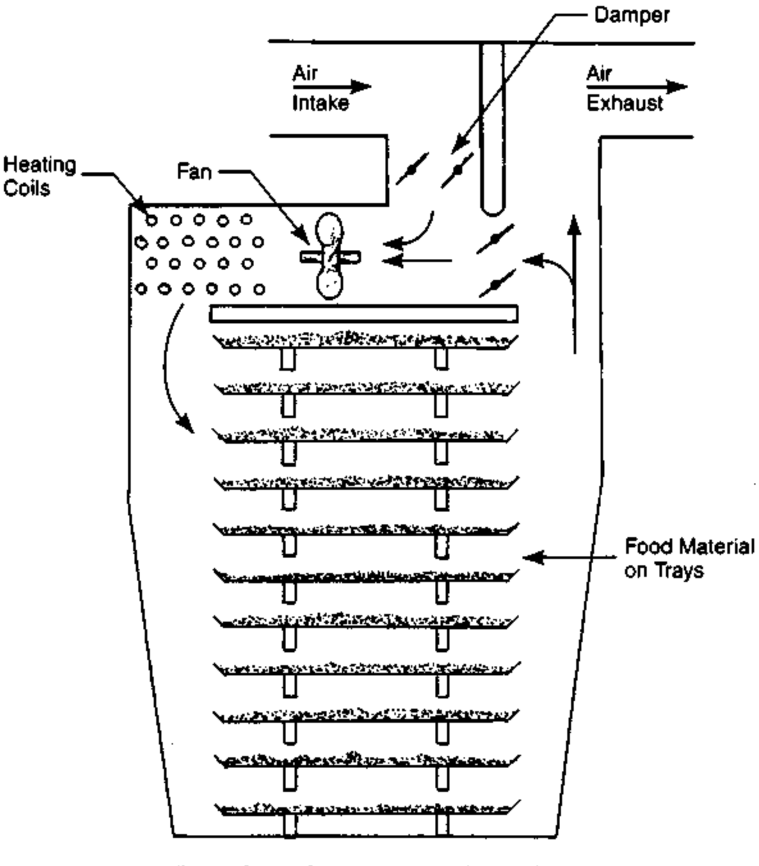

Fig. 12H Compartment/tray dryer.

H1. ***vacuum drying*** - Vacuum is used in drying food that is sensitive to higher heat levels because the vacuum lowers the temperature necessary for vaporization of the moisture in the food. The process is used with fruits and vegetables. It differs from freeze drying in a vacuum in that heat is applied to the food material. With the vacuum shelf dryer method, hollow shelves inside the vacuum chamber circulate a heating fluid. A vacuum of 1 to 70 Torr is used.[6] Careful control is required to avoid overheating the food. The major application is concentrating fruit juices.[6] Other drying methods may be carried out under vacuum conditions in order to lower the temperature required for drying and thus lessen the possibility of adverse effects.

H2. ***spray drying*** - of liquids, involves spraying the liquid, with a fine atomization, into a heated chamber or onto a steam-heated rotating drum, where the water is evaporated. Spray droplets are fine and evaporation time is usually very fast, under 30 seconds, producing a dry powder. The flow of hot gas (usually air) provides drying and movement of the product. The short drying time helps prevent degradation. Two methods are in use to provide the atomization of the liquid: pressure-nozzle atomization and rotating disk atomization.[3] With the pressure nozzle approach, pressures are typically 250 to 8000 psi (1.7 to 55 MPa). In the other method, liquid is fed to the center of a disk rotating at 1700 to 50,000 rpm on a vertical axis. Centrifugal force throws the liquid outward into fine droplets. The disk method is suitable for slurries and pastes, which could clog a pressure nozzle. When the disk method is used, a wide chamber is employed; with the nozzle method, the chamber is tall and narrow. With both systems, the dried particles settle to the bottom of the spray chamber and are removed by conveyor or gravity. Section C12a of Chapter 11 describes pressure nozzle spray drying and Fig. 11C12a illustrates spray drying in a heated chamber with both concurrent (same direction as spray) and countercurrent air flow. The heated air temperature is typically in the range of 400 to 590°F (205 to 310°C. Powdered milk, processed cheese, cream, eggs, fruit juices, whey, yeast extracts, and instant coffee and tea have been made by spray drying.

H3. ***drum drying*** - is used for some powdered foods such as milk and packaged mashed potatoes. A paste, slurry, or solution of the food material to be dried is fed to the outside surfaces of a horizontal, steam-heated metal cylinder that is rotated on its axis. The material is applied as a thin, uniform layer on the drum. The thickness of the layer depends on the food involved and its tolerance for heat. As the drum rotates, the heat from the steam is conducted to the layer, evaporating much of its moisture. At one position, after the drum has rotated half to three quarters of a revolution and as it continues to rotate, a knife blade scrapes the drum and removes the dried layer of food. Sometimes a vacuum is maintained in the chamber where the operation takes place so that the necessary drying temperature can be reduced. Fig. 11C12-2 in chapter 11 illustrates a dual drum-dryer which uses two, side-by-side drums rotating in opposite directions. The food material is fed to both drums from a central reservoir between them. There are several other arrangements with one or two drums. Drum drying is used for applesauce and other fruit purees, dry soups, precooked breakfast cereal, baby food, and bananas. Other food materials processed by drum drying are dried skim milk, malted milk, malt extract, potato flakes and yeast.

H4. ***fluidized-bed drying*** - is applicable to a variety of chemicals as well as foods and is also described in Chapter 11, section C12. A fluidized-bed dryer is pictured in Fig. 12H4. These dryers can be used for smaller-particle foods such as peas, potato granules, diced meat, sugar, salt, flour, coffee, and cocoa. The process is economical and is commonly used in food processing. Air is the usual drying gas and is heated by electricity, steam or by a combustion boiler. Bed heights range from about 1 to 50 ft (0.3 to 15 m). Food materials dried with fluidized beds include potato granules and mashed potatoes, quick-cooking rice and peas, rye and other grains.

H5. ***freeze drying (freeze dehydration)*** - involves freezing the food and removing the moisture by sublimation of the ice. The process takes place under a high vacuum at 26°F (−3°C). Freeze drying preserves flavor, nutrients, and texture better than simple dehydration, and is used for dried soup mixes, instant coffee and some other foods. Meats and other high-protein foods retain their

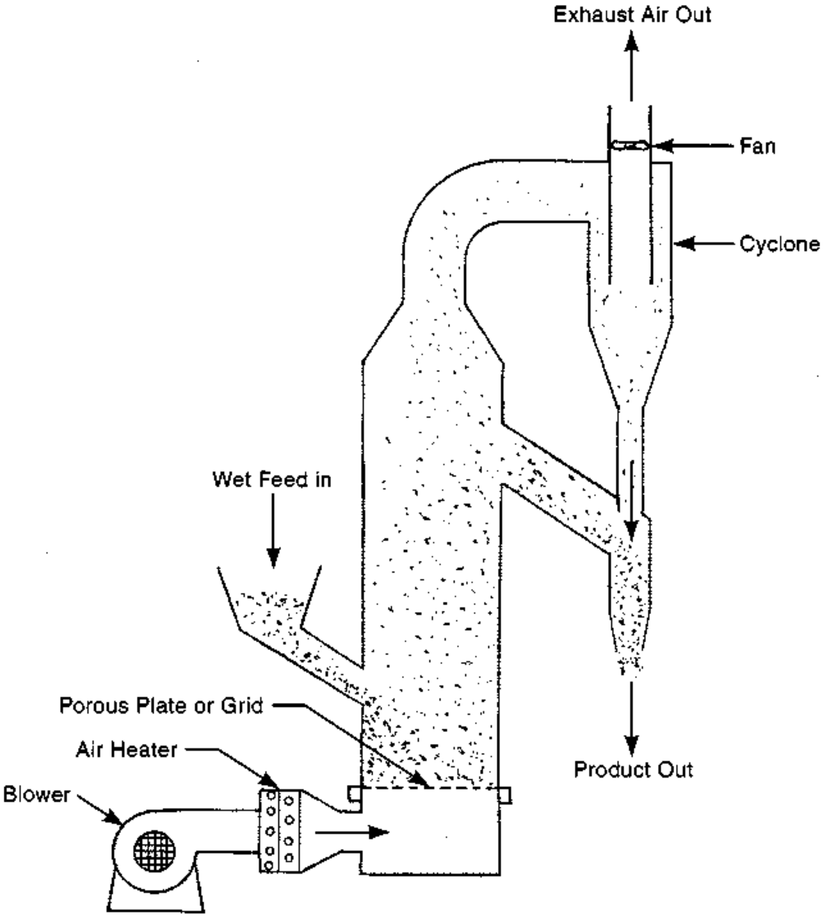

Fig. 12H4 Fluidized bed dryer.

nutritive and palatable properties only if freeze dried. After rehydration, freeze-dried meat closely resembles fresh meat[2]. Compartment dryers as described above and illustrated in Fig. 12H are often utilized with a vacuum but the material is first quick-frozen and spread in thin layers. Its temperature is kept below the freezing point, but some heating may be applied to provide the heat of sublimation[8]. Freeze dryers include, in addition to a vacuum chamber, a duct system to carry vapors away from the vacuum chamber, and a means to remove them from the system. This removal of vapors may involve condensation on a cold surface, adsorption on a solid desiccant, or absorption in a liquid. Both batch and continuous systems are used, depending on the production quantities.

Tunnel freeze dryers are used in some high-production conditions. Trays of food are loaded into the vacuum freeze tunnel at one end through an air lock. The trays are conveyed in the tunnel through several stages of refrigeration and drying and are discharged at the other end.

Handling of food through the freeze drying process requires some special attention. Lean meat, bone, and fat, each have a different moisture content and it may be necessary to process them separately. Most fat should be trimmed from lean meat before freeze drying. Fruit skins may have to be slit or removed. Some fruits are cored and diced. Vegetables may be peeled, washed, trimmed, and cut and blanched before freeze drying. Apples and pears are treated after peeling and before freeze drying with a sodium sulfite solution to prevent unfavorable color changes[8].

I. Cooling for Preservation

Refrigeration and other cooling is a common method of food preservation. Fruits and vegetables are usually cooled after harvesting and meats immediately after slaughtering. Temperatures below 40°F (4°C) do not make significant nutritional or taste changes in the food but retard the growth of microorganisms that cause food spoilage and slow the rate at which fruits and vegetables respirate and lose carbohydrates. Refrigeration is useful throughout the processing of food, its transport to market, and its storage by the customer before consumption. Refrigeration is particularly successful in extending the useful life of meats. Vegetables and fruits with high water content (eg., melons, tomatoes, cucumbers, bananas and pineapple) receive less benefit. The operation is common during many food processes to maintain the food quality before the preservation process is complete. Conventional refrigeration in cooled chambers powered by commercial refrigeration equipment and immersion of the food in chilled water are two approaches used.

I1. ***freezing food*** - prevents food spoilage by suppressing the growth of microorganisms in the food. It is a common and effective method for preserving many foods. When properly done, freezing maintains the natural quality of the food. Quick freezing is used because it forms smaller crystals from the moisture present in the food, and thus reduces cell damage which can change the texture and consistency of the food. Vegetables are blanched before freezing to ensure that enzymes present are inactive and to avoid degrading the flavor. Several different methods are employed to effect the temperature reduction. Some of these use freezing air; some use liquid freezing agents; others use contact with solid cold surfaces.

The following is the sequence for freezing sweet corn, a vegetable frequently preserved by freezing. Corn maintains high quality best if processed within a few hours of harvesting. Harvesting, in production situations, is mechanical. De-husking and removal of the "silk" are the first operations, performed with automatic equipment. Then the ears are washed thoroughly and blanched in steam for 6 to 11 minutes. Cooling follows immediately. If it is to be sold as cut corn, the corn may be blanched twice - once partially, before the kernels are cut from the cob, and then again after the cob is removed. The kernels are separated from any residue of silk or husk by flotation or washing. With both methods, the corn kernels settle to the bottom while the undesirable materials float away. The kernels are quick-frozen by the fluidized bed process and are packaged.[2]

I1a. ***freezing with refrigerated air***[1] - In these systems, air is chilled from contact with the cold coils of a mechanical refrigeration system and then is directed at the foodstuff to be frozen. The air temperature with such systems is typically zero to –22°F (–18 to –30°C) but may be much colder.

The freezing method often used with smaller foods such as shrimp, peas, and beans. is to blow the cold air upward through a mesh conveyor that carries the food. The air blast is strong enough to suspend the food pieces, circulating them and ensuring that cooling air strikes all surfaces. The individual pieces then do not stick together and the freezing is quick, preventing large ice crystals from forming. The suspension of the food pieces is similar to the suspension of particles in a *fluidized bed* and the term is sometimes used to describe this method. Freezing with refrigerated air is also usable with larger pieces of irregular shape that are not as suitable for contact freezing.

In the air blast method, which is used when foods are packaged before freezing, the packages are conveyed through a stream of cold air that is directed at the package at a high velocity, between 100 and 3500 ft/min (30 and 1000 m/min). The air temperature is usually maintained between –22 and –40°F (–30 and –40°C). The high velocity of the air blast and good contact between the package surface and the food provide quick freezing. A lengthy insulated conveyor may be required with packaged or larger food items. A spiral conveyor arrangement is sometimes used for such systems in order to have a more compact system.

A third air freezing method uses the cooling air as the medium of a refrigeration system. The air is compressed, then cooled, then allowed to expand before being directed at the foodstuff to be frozen. The air, then, may have a temperature as low as –250°F (–150°C). This method is classified as *cryogenic freezing*.

I1b. ***freezing with a liquid medium*** - Contact with a cold liquid provides more rapid freezing than is possible with air because of the better heat transfer rate with liquids. Liquid-medium freezing is particularly adaptable to larger food pieces, such as corn on the cob that, because of its bulk, may not freeze quickly enough from refrigerated air. There are several viable approaches:

One approach, used in canned orange juice, is to spray the cans with a chilled liquid (calcium chloride brine). Another approach is to immerse the cans in a bath of the liquid. Temperatures of –20°F (–29°C) are achieved by this method.

Another *cryogenic freezing* method uses liquid nitrogen or liquid carbon dioxide. They are sprayed directly on the food, freezing it very rapidly. The boiling temperature of liquid nitrogen at sea level is –320°F (–195°C). Liquid carbon dioxide boils at –109°F (–78°C) but when sprayed on a food, it changes to solid or snow-like dry ice.

I1c. ***indirect-contact freezing*** - Still a third approach presses packages of the food to be frozen between two chilled metal plates that have channels carrying a refrigerant. This not only provides the chilling needed but maintains dimensional control to counteract swelling that otherwise takes place during freezing. The approach is useful for frozen foods sold in rectangular packages of standard size and shape. The plates, in turn, are chilled by brine or refrigerant that circulates in the attached channels, hence the use of the term, indirect. In most systems there is a series of horizontal plates in a vertical stack. Food packages are placed between the plates, which are pressed together with light hydraulic pressure to insure good contact during the freezing operation. The plates can also be made in non-flat shapes or as cavities that impart a particular shape to the frozen food. Ice cream on a stick is an example. There are also arrangements with a series of vertical plates, between which the food is placed before the plates are pressed together. This method is used for freezing fish and meat, including whole fish at sea. After the freezing is complete, and the plates are spread slightly, the plates may be heated briefly to release the frozen food and to defrost and clean the plate surfaces before the next cycle.

I2. ***dehydrofreezing*** - involves partial drying of the food, to reduce its weight (about 50%[6]) and bulk, before freezing it until it is used. The method utilizes conventional drying and freezing processes and is used to reduce storage space requirements before further processing of fruits and vegetables. Food processed this way can be reconstituted more quickly and easily than foods processed with only drying.

J. Other Operations

Food may be subjected to a variety of processes in addition to those described above. Most have the purpose of aiding preservation, but they also may be used to change the flavor, physical characteristics or other properties of the food. Most, but not all, involve some heating or cooling as part of the sequence of operations. These processes include irradiation, homogenization, hydrogenation, fermentation, extrusion, biopreservation, pickling, salting, candying, glazing and adding sugar, incorporating other additives, high-intensity pulsed electric field processing and ultra-high-pressure processing.

J1. ***irradiation*** - In this operation, the food is moved or conveyed to a shielded chamber where it is exposed to ionizing radiation. One of two forms of radiation is commonly used; one uses gamma-rays (from cobalt 60); the other is from a machine-generated source (an electron accelerating machine). Irradiation kills molds, all bacteria, including harmless species, parasites, and insects, and delays ripening. It also delays sprouting of onions and potatoes. The process has been used for some time on wheat and wheat flour, potatoes, spices, pork, onions, tomatoes, mushrooms, strawberries, and poultry. Its use with beef in the United States was approved in 2000. It has the advantages of requiring much less energy than heat sterilization or freezing, and only minimally raising the temperature of the food being processed. On the other hand, enzymes in the food may not be deactivated by the radiation and they may lead to chemical changes and a small loss of nutritional value. The process may prolong the storage life of the food processed and may eliminate the need for refrigerated storage.

J2. ***homogenization*** - breaks up fat globules so that they remain dispersed in a liquid, notably, milk. A high pressure pump forces the liquid through very small openings at high velocity. This breaks up the fat globules, reducing them to small size, increasing their number and the total fat surface area. The globules may also impinge on a surface that faces opposite to the direction of flow. This further disrupts and divides the globules which then remain dispersed in the liquid. Pressures of 2000 to 2500 lbf/in^2 (14 to 17 MPa) are used in the process. The pressure is adjustable and is regulated to control the fat particle size. Two stages of homogenization are sometimes used, with separate pumps and homogenization valves. Milk is heated before the operation to inactivate lipase activity and to facilitate the break up of the fat globules.

J3. ***hydrogenation*** - is a hardening and raising of the melting temperature of fats and oils. It is accomplished by the addition of hydrogen in the presence of a nickel catalyst. Hydrogenation converts unsaturated radicals of fatty glycerides into more highly or more completely saturated glycerides.[2] The operation takes place in tall, cylindrical hydrogenation columns at a temperature of about 375°F (190°C) and pressure of 30 to 100 psi (200 to 700 kPa). The operation is usually performed on a batch basis and takes about one hour. Hydrogenation extends the shelf-life of fat-containing foods and, for many, also has a favorable effect on flavor and odor. However, it has been indicted as an unfavorable agent in cardiovascular health. Hydrogenation is a vital part of the manufacture of margarine and shortening. The fats in most packaged foods such as cookies, crackers, other snack foods and peanut butter, etc. are at least partially hydrogenated.

J4. ***fermentation*** - is a microbiological decomposition of an organic material, usually a foodstuff, accompanied by the release of a gas. It is the process by which sugars (eg., fructose and glucose) are converted to ethanol. The operation takes place in an atmosphere that excludes air. Yeast, mold, or bacteria are added to the liquid to be fermented to provide the microorganisms that perform the operation. The organic matter decomposes and reduction products remain. Alcohol and lactic acid, both useful products, are examples. The temperature of the liquid and the concentration of the nutrient are controlled to optimize the operation. Carbon dioxide in gaseous form is a normal byproduct.

Microbiological action in the presence of air also is referred to as fermentation although it does not meet the classical definition of the term. The result of the action is an incomplete oxidation. The production of vinegar (acetic acid) from alcohol and of citric acid from sugar are examples.

Applications of fermentation include the production of alcohol and glycerol from the yeast action on sugars, the production of butyl alcohol, acetone, lactic acid, monosodium glutamate and acetic acid from various bacteria and the production of citric acid, gluconic acid, antibiotics and vitamins B-12 and B-2 from mold fermentation. Cheese, wine, yogurt, bread, soy sauce and sauerkraut also are produced with the aid of fermentation.

J5. ***extrusion of foods*** - is an operation quite similar in principle and equipment to the extrusion of plastics, as described in Chapter 4, section I and Fig. 4I, or of metals, as described in Chapter 2, section 2A3. In most cases with foods, however, heat that is applied to the material, and the heating that results from the friction between the screw and cylinder of the extruder, cook the food mixture. This is in contrast to the extrusion of plastics and metals where the purpose of heating is to allow the material to flow through the extruder. The process has the high productivity that is characteristic of the extrusion of non-food materials, and is applicable to the mass production of foodstuffs. With food extruders, the material to be extruded is normally in paste form with a moisture content typically from 10 to 35%. The food is fed from a hopper to a rotating feed screw or twin screws and forced through a shaped die opening. The single screw extruder is more common but the twin-screw variety has greater ability to handle stiff mixtures and provides better control over operating conditions. The screw barrel is normally heated with steam or by electrical resistance. The cross section of the extrudate has the same shape as the die opening. The extrudate, after exiting from the die, is usually cut to some length by a rotary knife. It is also cooled and dried after extrusion. Heat generated or added during the operation may raise the food temperature to as high as 300 to 390°F (150 to 200°C) for a short time before it passes through the die. This temperature deactivates enzymes and microorganisms that could later cause undesirable changes in the food[1]. The high temperature also may cause the extrudate to expand after it leaves the die from vaporization of water in the mixture, creating a puffed or cellular structure for the food product. The product may then be coated with sugar, color, vitamins, minerals or oil.

Food products that are extruded include: wheat dough for pasta, cooked cereal dough for breakfast cereals, corn grits, soybeans, gelatinized corn flour, sausage mixtures, and soy dough. Other products made with extrusion are snack foods, baby foods, beverage and soup bases, candies, animal and pet feeds, vegetable protein and flat breads.[7]

J6. ***food additives*** - Various substances are added in small amounts to foods during preparation for specific purposes: to prevent spoilage or deterioration and to maintain freshness, to enhance appearance, flavor, texture, and nutritional values, or to aid in further processing. Additives used include such compounds as sodium benzoate, calcium propionate, benzoic acid, sorbic acid, citric acid, acetic acid (vinegar), sulfur dioxide, sulfites, and other materials to prevent microorganisms from attacking the food, vitamins, minerals, and other nutrient supplements, antioxidants to prevent browning, sugar, salt, and MSG for flavor enhancement, nitrites and nitrates for pickling, bleaching agents, stabilizers and thickening agents, and various colorants, both natural and synthetic. Anti-sprouting agents may be added to root crops (potatoes, onions, beets, carrots). The use of food additives is controlled in the USA by the Food and Drug Administration.

Bio-preservatives are non-toxic natural substances that have the power to kill harmful microbes that cause food spoilage and danger to consumers. Sugar, salt and pickling solutions all have this effect. Bacteriocins are proteins formed by bacteria that are present in foods. The bacteriocins have the property of killing other microorganisms that are similar to themselves but not other beneficial bacteria. They have been used in preserving pasteurized egg products. Sodium benzoate and other benzoates are common chemical preservatives. They normally comprise no more than 0.1 percent of the total content. Benzoates require an acid medium, common in fruits, to be effective. Sulfur dioxide and sulfites are also common, are effective against molds, and are used in fruits and vegetables. Low quantities are used in wine. Nitrates and nitrites are used in the curing of some meats.

Table 12J6 summarizes many of the reasons for including additives and agents in food and identifies specific ones that are commonly used.

J7. ***pickling*** - is a food preservation procedure that primarily involves immersion of the foodstuff in an acid (usually vinegar). The acid prevents growth of undesirable bacteria. There are many different

Table 12J6 Food additives

Reasons for Including Food Additives and the Agents Commonly Used to Achieve the Desired Effect*

Reason	Agent Used
Prevent growth of microorganisms	sodium benzoate, calcium propionate, potassium sorbate, sulfites
Prevent caking and lumping	calcium stearate, sodium aluminosilicate, cornstarch
Prevent browning and rancidity with antioxidants	BHA, BHT, ascorbic acid, ethoxyquin
Change color	beet powder, caramel, B-carotene, FD&C yellow 5 & 6, red 3, blue 1
Cure and pickle, prevent bacterial toxin from forming, impart flavor and color to meats, reduce spoilage	sodium nitrate, salt, sodium metaphosphate
Emulsify oil-water mixtures	monoglycerides, diglycerides, lecithin, monostearate
Enhance flavor	monosodium glutamate (MSG), disodium inosinate, disodium guanylate
Restore or enhance nutritive properties	various vitamins, iron, amino acids, essential fatty acids, various minerals
Stabilize acidity or alkalinity (pH) to desired level	sodium bicarbonate, vinegar (for acetic acid), hydrochloric acid
Prevent formation of molds or yeasts	sorbic acid, propionic acid, benzoic acid, ethyl formate

Note: Information for this table was taken from reference 1 and other sources.

variations of workable pickling methods, and they each give different results in terms of degree of preservation, flavor, and suitability for certain foods. Most pickling methods also involve the use of salt to provide a brine, which also has anti-microorganism properties. Preservation of food with a brine and spices, without an acid, is also called pickling. Pickling methods fall into one of two basic groupings: 1) Pickling that does not involve fermentation. This is may be called *quick pickling* or *fresh-pack pickling*, and, 2) pickling that includes fermentation. When fermentation is involved, the food usually has better preservation but the pickling process is more complex. Lactic bacteria, which are present on almost all vegetables, act on the starches and sugars in the food to be pickled to create lactic acid, which has food preservation properties similar to those of the acetic acid in vinegar. The process changes the flavor, appearance and texture of the food. Various condiments are also often used to create the particular distinctive flavor that is wanted in the pickled food.

The process of pickling with fermentation to produce lactic acid is also known as *lacto-fermentation*. With either quick pickling or fermentation methods, salt included in the pickling solution strengthens the microorganism protection against some undesirable microorganisms but, if fermentation is desired, it does not prevent it from taking place. Pickling does not preserve food for as long as canning and freezing. Normal usable life of refrigerated pickled foods is several months.

Fresh-pack (non-fermented) pickles are typically made by immersing cucumbers about 12 hours in a brine containing 2 to 3 percent salt, about 12 percent vinegar and spices. The mixture is then heated to a temperature of about 165°F (74°C) for 15 minutes, and immediately cooled. The process for fermented pickles is more lengthy. The cucumbers are placed in a brine with a salt concentration of 8 to 10 percent for one week. The salt concentration is increased 1 percent each week until the concentration is 16 percent. The material, at this stage, is referred to as salt stock and contains fermented pickles. It may be kept for years without spoilage but is not sold to consumers at this stage. The color has changed from green to yellow-green or olive and the interior has become translucent. For consumer use, the pickles are processed to leach out salt with water at a temperature of 110 to 130°F (43 to 54°C) for 10 to 14 hours. The process is repeated at least twice[2]. Tumeric and a final rinse may be added to improve the color and provide firmness. Other processing may take place, depending on the type of pickles to be produced. Sour pickles are made by processing the salt stock with weak vinegar. Sweet pickles are produced by adding sugar, spices and vinegar to processed stock. Processed dill pickles are prepared by adding dill and other spices to the acidified salt solution. Natural dill pickles are made slightly differently. Instead of using salt stock, they are made from fresh cucumbers immersed in a brine with dill and other spices. They are not usually packaged in vinegar but are perishable and are pasteurized and repackaged[3].

Sauerkraut is a notable example of a vegetable produced by fermentation pickling. It is made from cabbage. The cabbage is first shredded to open the cell structure, then salted to about 2.5% and stored in closed crocks. General microorganism activity begins but when the oxygen in the crock is used up, the lactic-acid-producing bacteria take over, producing lactic acid that neutralizes some of the undesirable products of earlier activity. The final sauerkraut typically has a lactic acid content of 1.7%, providing the distinctive flavor.

Olives are also processed by lacto-fermentation and the fermentation takes 6 to 10 months. Green olives are treated with lye (NaOH) before fermentation, and black olives after fermentation, to remove the compounds that cause raw olives to have a bitter taste. Other vegetables processed with lacto-fermentation are beets, cucumber, turnips, green tomatoes, peppers, and lettuces. In Asia, lacto-fermented vegetables are eaten frequently. The vegetables involved are cabbage, turnip, eggplant, cucumber, onion, squash, and carrot. The process begins with placing the vegetable in salt, removing some of the water it contains, and then effecting a slow fermentation with lactic bacteria.

Meats are pickled by treating them with pickling solution in one of three ways: soaking them in the solution, injecting them with the solution, or coating them with a mixture of dry pickling ingredients. Pickling ingredients for meats include salt (sodium chloride), sodium nitrate, sodium nitrite, sugar, and vinegar or citric acid. When dry ingredients are used, the operation may be referred to as *dry curing* or simply, *curing*. Cured meats may be smoked after curing. Meats that are pickled or cured include bacon, sausage, corned beef, pastrami and ham.

Fish, (notably salmon and herring) as well as eggs are processed by pickling. Pickling fish involves the use of vinegar of 5% acetic acid, salt and the desired spices. Pickled fruits include watermelon rind, mango, plum, lemon and kumquat.

J8. ***salting*** - is a method of food preservation. A high concentration of salt on the surface and within food material prevents bacterial growth. The salt prevents bacteria from absorbing additional water needed for the growth that spoils food. In fact, the bacterial cells lose water because of osmotic pressure of the salt solution. This kills the cells. Salt may be applied by one or more of three methods: dry granular salt may be rubbed on the surface of the food or completely cover the food pieces in a container, a brine may be injected into the food, or the food may be soaked in brine. Days or weeks may be required for the salt or brine to fully permeate the food tissues. Spices and flavorings may be included with the salt.

Salt is an important ingredient in pickling as noted above and some pickling methods depend solely or almost solely on salt to provide the wanted food preservation. Fish, pork, eggs and beef (corned beef and pastrami), are commonly processed with salt. Salt preservation is also used to preserve vegetables and fruits, notably mango, peppers, cauliflower, mushrooms, lemon, tamarind, gourd, chilies, and goose berries.

J9. ***sugar curing/sugar addition*** - Sugar is added to many products as a preservative in addition to its flavoring function. If the sugar content of a food is at least 65 percent by weight, the effect on the food bacteria is the same as that from salt, in that water is drawn from the bacterial cells and their growth is halted. It takes much more sugar than salt to get the same microbiological effect. Acidic foods, eg., fruits, are particularly suited to this approach. The sugar can be applied by rubbing it on the surface of the food, or by soaking the food in a sugar solution, or by injecting a sugar solution. Both sugar and salt, and other flavorings and preservatives are sometimes included in one mixture that is used. Ham, bacon, dried beef, and smoked turkey are often treated with this kind of mixture. Jams, jellies, marmalades, and fruit butters all gain storage properties through having a high sugar content.

J10. ***candying and glazing*** - of fruits involves increasing their sugar content to the point noted above where microorganisms that could cause spoilage are inhibited. Candying is effected by immersing the fruit into warm sugar syrup in multiple steps, where the syrup is progressively higher in sugar concentration. This step-by-step approach prevents the fruit from becoming leathery and tough. After the impregnation is completed, the fruit is washed, dried, and packaged. Glazed fruit is processed the same way but at the end is dipped into syrup that is then dried to provide a coating. Sometimes, granulated sugar is used as the final coating. In high production situations, candying, and most of the accompanying operations are carried out on automatic production equipment. Cherries, citrus rinds, many other fruits, flowers and herb leaves are commonly processed with this method.

J11. ***high-intensity pulsed electric field processing (PEF)***[1,10] - is a non-thermal food preservation process that uses electrical energy rather than heat. The electrical energy is in the form of high-voltage (typically 20 to 80 kV/ccm[10]) pulses that pass through the food. The food is placed between and in contact with two electrodes that carry the pulses. The pulses last only a small fraction of a second, enough to affect the cell structure of pathogens and micro-organisms that cause spoilage. The cell membranes of the microorganisms are irreversibly damaged and the organisms are rendered inactive. Heat is not the cause of the cell changes though some heat is generated by the electrical field in the food material. (The food to be processed remains at or near ambient temperature.) There is very little adverse effect on the flavor, texture, or nutritional value of the food. Energy requirements are considerably less than those of thermal processes. No additives are involved, and shelf life of the processed food in lengthened. The PEF process is primarily limited to liquid foods, although bread and brewer's yeast have been treated. Milk, liquid whole eggs, fruit juices and soups are processed with this method.

The equipment used consists of a closed system to prevent contamination from outside sources and external apparatus to provide the electrical pulses and control of the operation. The system is illustrated in Fig. 12J11. The closed portion includes pump, treatment chamber, cooling system and provision for storage and packaging of the finished product. The electrical charge is provided by

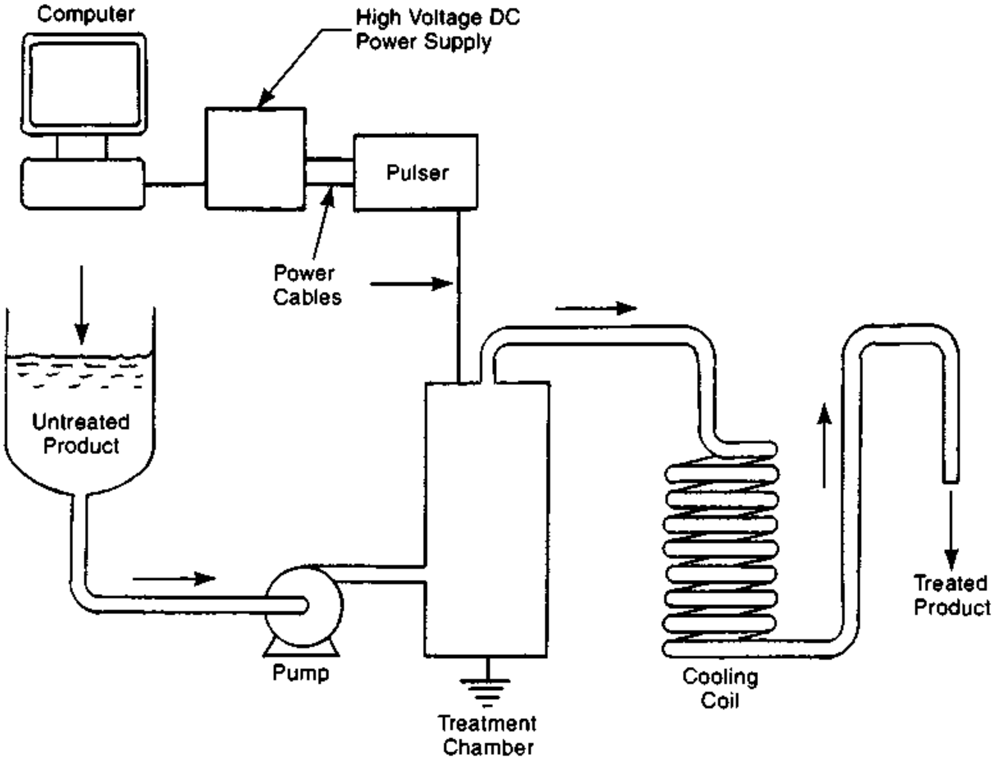

Fig. 12J11 Flow diagram of a continuous pulsed electric field (PEF) processing system.

either 60-cycle power from utility lines, stepped up in voltage and converted to DC, or from a high frequency input to a capacitor that stores the energy and discharges it repeatedly to the food.

J13. ***high pressure processing (or ultra-high pressure processing)*** - uses pressure as a food preservation method. Subjecting the food to pressures in the range of 30,000 to 150,000 psi (200 to 1000 MPa) inactivates micro-organisms and some enzymes. (Although not intended to be a thermal process, heat is generated when the food is compressed. The pressure, rather than the heat, is the prime factor in affecting the microorganisms and enzymes.) Changes in the flavor, texture, nutrients, and color are minimized, compared with those of thermal processes. The operation can be performed in as little as two minutes or may require as much as two hours, but is more commonly carried out in 10 to 30 minutes. Most current operations are on a batch basis, though semi-continuous methods are also in use. The food is placed in a sealed plastic-film package, and loaded into a steel vessel with a pressure transmission fluid, usually a liquid. The vessel is closed, pressure is applied and maintained, and then released. The vessel is opened and the packages of food are removed. The effect on the food is the same, no matter how big a batch is processed at one time. Current applications include pasteurization of fruit juices, fruit jellies, sauces, purees, guacamole and yogurt, improvement of raw ham, reduction of bitterness in grapefruit juice, stopping the fermentation of rice wine, and aiding in the sugar impregnation of tropical fruits[1]. The process is used to kill unwanted bacteria in raw oysters.

K. Meat Packing

Meat packing is the conversion of cattle, hogs, sheep, poultry, and other animals to edible meat food. The process involves a series of operations including stunning, slaughtering, bleeding, eviscerating, skinning, grading, chilling, butchering, the making of sausage and other processed meat products, and packing. The 20th century saw advances in this industry in sanitation, humane treatment of animals, and mechanization of operations. Meat is not the only product. Bones are made into fertilizer, adhesives, animal feed, and pharmaceutical material. Horns and hoofs are sold for other purposes; fat is rendered for use as lard or commercial grease.[4]

K1. ***stunning*** - renders the animal insensitive to the slaughter. When done correctly, the animal becomes unconscious immediately and feels no pain when slaughtered. Several methods are in use: *captive bolt stunning, electrical stunning* and *carbon dioxide anesthesia.* Aside from the humane aspect of preventing animal suffering, proper stunning also provides more assurance of safety for the workers involved, and avoidance of some meat quality problems. Before stunning, the animal may be restrained in a way that does not agitate the animal but does permit more accurate placement of the stunning device. Different types of restraints are used for different animals.

For beef cattle, the common method of stunning is to use a "captive bolt" gun. Using a blank explosive charge or compressed air, a bolt-like projectile is fired at the head of the animal. It penetrates the skull of the animal and has the same effect as a live bullet. The animal immediately becomes unconscious. The bolt, however, retracts after the animal is shot and is reset for the next use. This approach is safer than using conventional bullets and is also used for sheep, goats, pigs, camels and horses.

Electrical stunning utilizes a moderately low-voltage current, applied by electrodes held by tongs at each side of the brain, to induce an electroplectic shock in the brain similar to a grand mal epileptic seizure. The duration of current flow is up to about 10 seconds for sheep, goats, pigs, and turkeys, and about 5 seconds for chickens. Typical voltages are 125 for pigs, sheep, and goats with current at about 1 to 1.25 amps. For poultry, lower values of both can be used. Some methods use higher voltages and shorter stunning periods. The method is less easily applied to beef cattle and not widely used for cattle at present.

With poultry and some genetic strains of pigs, another method is anesthetizing with a gas. Carbon dioxide, in concentrations of 65 to 85% in air, is used. The method requires more technically sophisticated equipment and is used principally at larger meat packing installations. In one method the animals are lowered into a chamber with the high CO_2 concentration, where they become unconscious.

K2. ***slaughtering*** - after the animal is stunned, it is attached by the leg to an overhead moving chain conveyor. The jugular vein and carotid arteries of the animal are cut so that it bleeds to death very quickly. Then, as the carcass moves along the conveyor, it is skinned with an electric knife, beheaded and opened. Viscera are removed and the carcass is split into two sides. The carcass is then cooled to temperatures near freezing to retard the growth of organisms that cause spoilage of the meat.

With hog slaughtering, the steps are similar except that the carcass is not beheaded nor split initially. The first step on the conveyor line, after bleeding, is to move the carcasses through scalding vats to machines that remove hair from the skin. The next processes include eviscerating, washing, and trimming[4]. Thereafter, butchering and other slaughterhouse processing that is common with beef, follow.

Lambs are slaughtered much like cattle. The skin (with wool) is removed, and the carcass is refrigerated before it is split.

K3. ***butchering*** - Carcasses are typically chilled for 24 to 48 hours before grading and processing. With beef cattle, much of the butchering formerly was done at wholesale or retail locations with only primal cuts made at the slaughtering location. That system has changed, partially because of improved packaging at central locations and better and faster means of refrigerated transport. Benefits are also realized from the better facilities for utilization of offal, the non-edible portions of the animals: the bones, hides, intestines, hoofs, etc. when the processing is done at a central location. Specialty edible items such as tongue, kidneys, tail, and fats are also better processed at the packing house rather than at wholesale or retail locations. Tools for butchering include band saws, deboning equipment, and a variety of special cutting knives. Cuts intended for shipment to retail outlets are trimmed, deboned, if applicable, wrapped (often by vacuum packaging in plastic bags that are moisture and gas impermeable) and packed in corrugated boxes

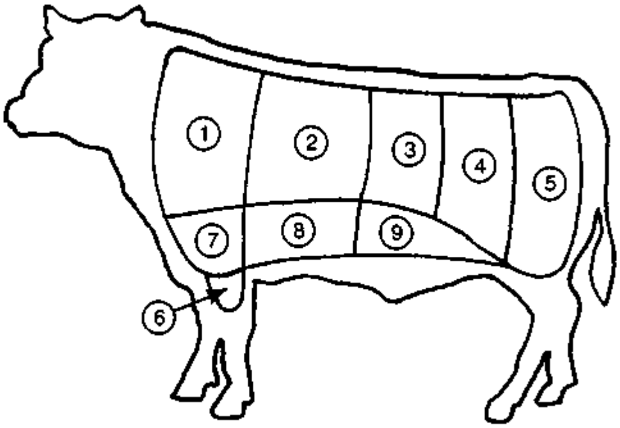

1. **Chuck**
   Pot Roast
   Eye Steak
   Short Ribs

2. **Rib**
   Rib Roast and Steak
   Ribeye Roast and Steak
   Back Ribs

3. **Short Ribs**
   Top Loin (Strip Steak)
   T-bone Steak
   Porterhouse Steak
   Tenderloin Roast and Steak

4. **Sirloin**
   Top Sirloin Steak
   Tri-tip Roast and Steak

5. **Round**
   Top Round Steak
   Round Tip Roast and Steak
   Bottom Round Roast
   Eye Round Roast and Steak

6. **Shank**
   Shank Cross Cut

7. **Brisket**
   Brisket (Whole)
   Brisket (Flat Cut Boneless)

8. **Plate**
   Skirt Steak

9. **Flank**
   Flank Steak

Fig. 12K3 The sources in beef cattle of common cuts of meat.

before shipment. These procedures extend the shelf life of the fresh meat. Fig. 12K3 shows the source in the animal of common cuts of beef.

With hogs, butchering for specific cuts of meat has been more commonly done at the slaughter house for many years. The carcass is cut into legs, loins, shoulders, and picnic hams, etc. Further operations, such as curing and smoking are more common with meat from hogs. About 65% of pork is in the form of processed meat, such as bacon, ham and sausage.

After butchering, meat packing operations may include one or more of the following: sausage making, canning, cooking, tenderizing with enzymes, fat rendering, manufacture of sectioned and formed products, and production of restructured meat products. Hams and bacon are cured by injecting brine curing solution into the meat. Many cuts may also be smoked. These operations provide long shelf lives and reduced shipping and inventory costs. Meat is shipped after slaughtering and butchering to distribution and retail points by refrigerated carriers, usually by truck.

L. Bottling

Bottling is the preferred packaging method for many liquid materials and food products: Soft drinks, beer, wine, distilled spirits, spring water, juices, milk, sauces, syrups, cooking oils, and salad dressings are packaged extensively in bottles. Glass has been the predominant bottle material, but plastics have made and are continuing to make major inroads in the bottle market. In the mass-production situations that are so often applicable to foods, bottling is a highly automatic, high-speed, series of connected operations. With high- production machines of the type used for popular beverages, bottles are removed from shipping cartons with an *uncaser* machine, or are unscrambled, uprighted as necessary, and fed to a machine that washes, sterilizes, and drip-dries them, and then conveys them to a filling station. (Washing, sterilizing, and drying involves inverting the bottles to allow gravity to remove foreign matter and cleaning liquids, after which the bottles are turned upright again.) The filling station is a large table, reminiscent of a carousel; it carries many bottles, each held near the outside edge. As the table rotates, the bottles are filled from inserted tubes. The filling tubes move with the bottles and remain inserted until the bottles are full. After filling, bottles are conveyed aside and empty bottles are moved to engage the circular filling table. The full bottles are conveyed to another rotary table where caps, corks, or other closures are dispensed and positioned at the bottle top. Again, the dispenser and capping equipment rotates with the bottles. At the next rotating station, the bottle tops are crimped, screwed on, pressed in or otherwise processed to effect a seal of the bottle's contents. Many bottles then get a second, tamper-resistant closure in addition to the basic cap. Labels are applied at the next station with adhesive-bonded paper or plastic labels. Some printing, for example, for date codes, may take place on the line. The finished bottles are then accumulated and packed into corrugated cartons or other shipping containers by automatic packing machines. All these operations take place on one large, mechanized bottling line. The movement of the bottles through this equipment is usually continuous. Bottles are fed automatically onto and later off such tables. For many bottled products, the bottling machine operates at a speed of several hundred bottles per minute and, in some machines, as much as a thousand per minute.

The other bottling approach usually involves more of a straight line arrangement with a stop-and-go movement of the bottles. The bottles are stopped, usually in groups, for filling, capping and other operations, and then move again to the next station. This type of arrangement is more common when the production quantities are modest. Fig. 12L illustrates a typical straight line bottling machine.

Fig. 12L A typical automatic bottling system. Bottles are fed to the line from the unscrambling table at the left where they are placed manually. They are conveyed to the filling station, where eight bottles are held and filled simultaneously. The bottles then are conveyed to the capping machine where caps are positioned and tightened, then to an accumulation table where they are removed and packed. Machines for larger production quantities may have automatic feeding and packing machines added to the system. Courtesy *Inline Fillings Systems, Inc., Venice* FL.

M. Other Packaging

Jams, jellies, sauces, condiments, spreads, and semi-solid and solid food products are often packaged into jars, using operations and equipment very similar to those of bottling. Other types of food packages: plastic tubs, paperboard boxes, plastic pouches, formed plastic or aluminum foil trays, dishes or bowls, vacuum shrink packages, and bag-in-a-box packages, are all processed in equipment that, in principle, is similar to bottling equipment. Normal production volume justifies highly mechanized systems. The package moves by conveyor from station to station; each station has some function that advances the product package to its final condition. Packages are fed automatically to the system, opened and sterilized as necessary, are filled, closed, sealed, given identification, and sent to and incorporated in a final outer package. There are differences as well. Non-liquid food is more apt to be dispensed to containers by weight rather than volume; plastic packages are more apt to be preprinted rather than labeled after filling; refrigeration or freezing is more common after the package is sealed, unlike canned or bottled foods. The equipment may be highly specialized; that is, it may be designed and developed specifically for some particular food and package design. In some plants, particularly with more complex and lower-quantity items, the packaging line may incorporate some manual operations interspersed with those that are fully automatic.

Final packaging provides mechanical protection for the product, usually in corrugated fiber containers. Sometimes, stacks of primary or secondary packages are stretch-wrapped. Canned beverages are frequently packed in multiples of 6, 12 or 24 in paperboard carry-out boxes. These operations can be manual but, in high-production situations, are performed automatically. Carton filling and sealing machines collect the primary or secondary food packages in stacks or blocks, insert them in the final containers from the top or side, and fold and glue the closing flaps. Shrink film wrapping has become a common method for holding food cartons on pallets for storage and shipment.

N. Storage

Storage for foodstuffs provides protection from many unfavorable conditions or agents including: microbiological attack, insect infestation, adverse chemical reaction, moisture or humidity damage or corrosion of packaging, and damage to the food by excessively-high or -low temperatures. Adverse effects that can take place in foods during storage include changes in flavor, color, texture, and nutritional values. The impermeability and durability of the packaging materials may be an important factor. The best storage normally occurs in closed buildings that are temperature and humidity controlled. Optimum storage temperatures and humidities depend on the nature of the food and the packaging. Storage of raw or in-process food materials has the same requirements as for finished products. Storage lockers with cold or below-freezing temperatures may be required for some materials. Liquids are stored in tanks which also may keep the contents at below-ambient temperatures. Tanks, piping, pumps, and valves must be thoroughly cleaned between batches.

Proper storage methods include close control and minimum variation of the following factors: 1) temperature. A constant, usually low, temperature is preferred for most foods. Temperature changes, including changes below the freezing point for frozen foods, may result in quality deterioration. 2) humidity. Foods high in water content should be kept in a high-humidity environment; dehydrated foods need just the opposite. 3) atmosphere. Apples and some other fresh fruits and vegetables are stored in a protective gas atmosphere. Otherwise, oxygen may react with the food, leading to color changes and rancidity. 4) light levels. Light striking some fresh fruits and vegetables may cause undesirable changes. 5) stock rotation. The storage system should insure usage of the oldest material first.

O. Food Equipment Cleaning and Sanitizing

Proper food processing demands that the equipment used is clean (free of food soil and any other matter that could be nutritive for microorganisms) and sanitized (to kill any organisms that may be present. Pathogenic organisms can include bacteria and other microorganisms, viruses, molds, and parasites.) Requirements are most severe for surfaces that directly contact the food being processed but non-contacting surfaces in the proximity of the equipment must also be kept free of sources of contamination. Walls, ceilings, light fixtures, equipment frames, and other exterior portions of food processing equipment must not be allowed to contaminate the working surfaces of the equipment.

The standard order of operations for cleaning and sanitizing of food contact surfaces is: 1) rinsing, 2) cleaning, 3) rinsing again, perhaps twice, 4) sanitizing. The use of detergent chemicals for cleaning is standard practice.

Cleaning may occur with the equipment fully assembled ("clean in place"), partially disassembled or fully disassembled, depending on the nature of the probable soil, the difficulty of removing it, and the design of the food processing equipment. Cleaning in place has become the preferred method, for labor-cost and other reasons, if the food equipment can be engineered to provide it. Installed spray heads must adequately reach all surfaces. Valves, pumps, heat exchangers, and mixing devices must be designed so that material is not trapped, and that sprays or agitated soaking reaches all surfaces. When spraying can be made automatic, hotter water, steam, and cleaners with high alkalinity or acidity can be used since human exposure to these hazards is greatly reduced.

The cleaning/sanitizing methods and their frequency must be established and defined for each food operation. In batch operations, cleaning frequently is scheduled after each batch. Cleaning may also be scheduled on a per-work-shift or per-day basis, or on some other schedule. These operations, in some factories, are performed by separate crews from those that operate the equipment.

O1. ***equipment rinsing*** - or pre-rinsing is a first step, often with water of ambient temperature, to loosen and remove as much food material as possible and to soften any that is not removed, so that the cleaning step that follows is more effective. Rinsing also takes place after cleaning to remove the residue of the detergent or other cleaning compounds. Much rinsing is done with manually-held hose and spray heads, but some equipment is equipped with fixed spray heads. Other equipment is disassembled and smaller parts are placed in soaking pans for cleaning and rinsing.

O2. ***equipment cleaning*** - is the complete removal of food remnants, using a hot spray or soak, but with a detergent solution instead of water. Brushing with powered or non-powered brushes may be part of the operation. Either acidic or alkaline detergents - and sometimes both - are used, depending on the nature of the residue material to be removed. Alkaline cleaners commonly utilize sodium hydroxide along with surfactants, dispersants, and water conditioning agents.[1] Alkaline cleaners are generally required for removal of proteins, but are also effective with fats, carbohydrates and sugars.[1] Acid detergents are used for dairy products. They typically contain phosphoric or nitric acid or both. Steam cleaning is also used. Cleaning is more effective with stronger detergent solutions, longer contact time of the detergent, higher temperatures, and agitation of the solution. High pressure sprays of up to 500 psi (3.5 MPa) are sometimes used. Smaller cleaning components are often washed in a tub and reassembled to the equipment after rinsing. They may also be processed through a semiautomatic cleaning tank that provides both chemical and mechanical cleaning.

O3. ***equipment sanitizing*** - There are two basic sanitizing methods: thermal sanitizing using hot water or steam, and chemical sanitizing with certain antiseptic solutions. Chemical sanitizing involves spraying or immersing the equipment in the sanitizing solution. Common sanitizing materials include: chlorine compounds (eg., hypochlorous acid - HOCl - or chlorine dioxide - ClO_2), iodine (iodophors), quaternary ammonium compounds, acid-anionic solutions, fatty acid sanitizers, and peroxides (hydrogen peroxide - HP - or peroxacetic acid - PAA).

Hot water sanitizing of small parts normally requires immersion in hot water (170°F – 77°C) for at least 30 seconds followed by a rinse with water of 180°F (82°C).

O4. ***other factors*** - It is important that the cleaned and sanitized surfaces be dry as well as clean after the procedure because moisture is a factor in bacterial growth. Brushes and other equipment used in cleaning and sanitizing must also be clean and dried after the procedure.

References

1. *McGraw-Hill Encyclopedia of Science and Technology, Vol. 7*, 8th edition, 1997, ISBN 0-07-911504.

2. *The New Encyclopedia Britannica Macropaedia, Vol. 19, 15th ed.* Encyclopedia Britannica, Inc., Chicago.
3. *Van Nostrand's Scientific Encyclopedia, 8th ed.*, 1995, Van Nostrand Reinhold, New York.
4. *Encarta Encyclopedia*, Microsoft, 1999.
5. *Food Engineering Fundamentals*, L.C. Batty, S.L. Follkman, 1983, John Wiley, New York, ISBN-0-471-05694-4.
6. *Food Engineering Operations* - J.G.Brennan, J.R. Butters, N.D. Cowell, A.E. Lilly, 1969, Elsevier, London.
7. *Fundamentals of Food Engineering* - S.E. Charm, AVI Publishing, Westport, CT, 1978, ISBN 0-87055-278-3.
8. *Handbook of Food Engineering* - D.R. Heldman, D.B. Lund, Marcel Dekker, New York, 1992, ISBN 0-8247-8463-4.
9. *Van Nostrand's Scientific Encyclopedia, 9th ed.*, G. Considine, ed., John Wiley & Sons, NY 2002, ISBN 0-471-33230-5.
10. *Pulsed Electric Fields*, U.S. Food and Drug Administration, Center for Food Safety and Applied Nutrition, June, 2000.
11. *Introduction to Food Engineering, 2nd ed.*, Singh, R.P. AND Heldman, D.R., 1993, Academic Press, San Diego.
12. *Fundamentals of Food Process Engineering, 2nd ed.*, Toledo, R.T., 1991, Van Nostrand Rheinhold, New York.

Chapter 13 - Processes for Electronic Products

A. Printed Circuit Boards (PCBs)

Printed circuit boards are also called *printed wiring boards (PWBs)*. They are thin boards made from non-conducting materials upon which metallic circuitry has been deposited. Almost all common electronic products utilize the printed circuit board as the means for connecting and holding circuit devices (integrated circuits, transistors, diodes, other semiconductor devices, resistors, capacitors, inductors, sensors, displays, connectors, and switches). The electrical connections between these devices are in the form of metallic coatings on the board in a pattern to make wiring paths between the devices. Soldering is used to make permanent electrical connections between the devices and the circuit paths and provides a combination of high reliability and uniformity, at low cost. Photochemical techniques are heavily utilized in the manufacture of the wiring paths. Printed circuit boards have proven to be economical, highly reliable, and suitable for providing complex circuits in a small space, at light weight. Although intended for high production applications, the boards are frequently used for low-quantity and prototype production. They are used in television sets, high fidelity systems, radios, computers and computer peripheral devices, military, airborne and industrial equipment. Fig. 13A shows a typical printed circuit board.

A1. ***making bare printed circuit boards*** (boards with no devices assembled to them) - The printed circuit board is normally a flat board made from thermosetting plastic reinforced with glass fiber. See Chapter 4, section G8, for information on the methods used to manufacture laminated boards for various purposes, including printed circuit boards for electronics applications. (Also see A3 below for multilayer boards.) The most common board material is epoxy plastic, reinforced with glass fabric. Some boards use higher temperature epoxy or polyamide resins that are able to resist the solder temperatures involved in lead-free soldering. Kevlar and polytetrafluoroethylene (Teflon®) are used in some military and highly-sophisticated applications. Low-priced boards for some consumer products are made from paper-phenolic plastic laminates. The initial laminations are large and are normally sheared by the manufacturer into smaller panels that are still large enough to hold multiple circuit boards. The panels remain as one piece through the manufacturing operations and are separated into individual boards after processing.

The circuit board differs from other laminated plastic boards in that it normally contains layers of copper foil on the top and bottom surfaces, (only on the top for the simplest, one-sided boards). The copper foil is converted to metallic paths that act as conductors in an electronic circuit, replacing the wiring that otherwise would be required. These wiring pathways are commonly called *traces*. When various electronic devices are mounted on the board, either on one side or both sides, they are connected to the traces with solder joints. Two methods for putting traces on boards are the subtractive method and the additive method. (See A1b and A1c below.)

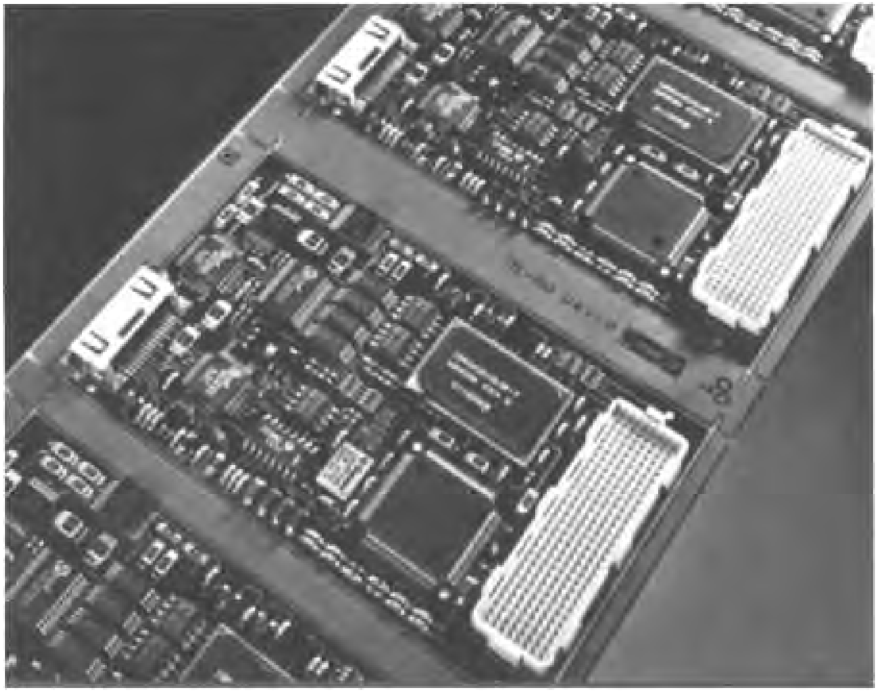

Fig. 13A A panel of several typical printed circuit boards with resistors, integrated circuits, capacitors, connectors and other devices soldered in position. It is often more convenient and more economical to process a panel of several boards through the assembly and soldering operations and then separate them rather than processing the boards individually. *(Courtesy Universal Instruments.)*

To make the more complex multilayer boards that have an internal layer of traces, a board with traces on both sides is laminated to a non-conductive layer of reinforced plastic and to another board, which may have traces on one or both sides. Controlled pressure, elevated temperature, and time, bond the boards together. Boards with traces on both sides or internally in the board are connected with *vias,* holes drilled through the board and electroplated with copper to provide a metallic electrical connection between the circuit paths involved. Vias may go through all board layers or only some layers, depending on the circuit design. (See Fig. 13A1.) The first plating of the vias with copper is carried out with an electroless process after the drilled holes are deburred. The next step is electroplating with additional copper. The full manufacturing sequence for the bare board often exceeds 100 separate operations.

A1a. ***resists and photoresists*** - are chemically resistant materials that are vital in the production of printed circuit boards and integrated circuits (IC). These materials can form temporary thin-film barriers so that subsequent processing operations, such as plating or etching, can be limited to only the circuit paths or, in other cases, to only the non-circuit areas of the board or IC. Photoresists are materials that change their properties when exposed to visible light, ultraviolet light, x-rays or electron beams. Some photoresist materials consist of a soft, gelatinous plastic that can be polymerized and hardened by exposure to the radiation. Others, based on an alkaline-soluble resin but including a photoactive compound, are initially hard but are softened and made more soluble after exposure. By projecting light or other radiation through an image mask and onto a layer of the photoresist, the desired pattern can be created to provide wiring circuitry on the board or device. The advantage of the photoresist is that it can provide a fine-pitch spacing of circuit elements. Most photoresists are in the form of a solid dry film. The film is laid on the panel and bonded to it with heated rollers. The film may also be applied as a liquid coating that is then dried.

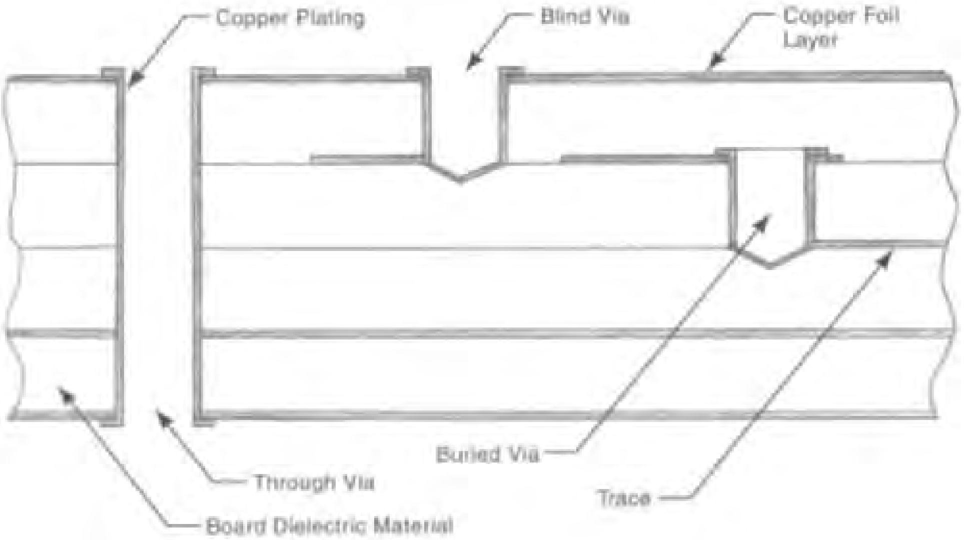

Fig. 13A1 Cross section of three kinds of vias: through vias, blind vias, and buried vias.

Another method utilizes electrophoresis (See 8D9.). Other resists consist of ink, paint or metal plating that does not have photosensitive properties. Inks and paint are applied by silk screening or stenciling to get the desired circuit pattern. This method is faster and less costly than using photoresists but is less precise.

Resist materials are constantly being developed with better resolution (for fine pitch circuit elements), higher purity, better resistance to etchants, and higher sensitivity to low levels of radiation.

A1b. ***subtractive process for making wiring patterns on the board*** - This approach is used on all but a small percentage of circuit boards. The circuit board used with this method incorporates a layer of copper foil in the laminate, on either one or both sides of the board. The copper layer is the base for circuit traces that will contain additional copper and tin/lead solder, at least on the pads, lands and holes. If there are vias (connecting holes between layers of copper foil), they are drilled, deburred and plated with copper to make the connection. Two methods are in use that selectively remove parts of the copper foil to leave copper circuit paths on the board. Both methods involve the application of a protective mask of resist material on the copper layer. Both methods may use either a resist applied in a pattern or a photoresist that is patterned after it is applied.

In the first method, if a screen-printed resist is used, it covers the circuit paths with the resist material and does not cover the areas between the circuit paths. If a photoresist is used, the entire surface of the board is covered with a dry film of photoresist material in a thin layer, 0.001 to 0.002 in (0.025 to 0.050 mm) thick. The board is then subjected to a radiation (usually ultraviolet light) through a mask. The photoresist material reacts to this radiation, leaving harder and stronger film over the planned circuit paths and a softer and weaker film over the board spaces between the circuit paths. The softer photoresist is then washed away, leaving the circuit paths covered with the film. The board then undergoes an acid bath that etches away the unwanted copper foil, that is, the foil not covered by resist material, leaving the circuitry and its photoresist cover in place. The photoresist now can be removed and this is done with a procedure that utilizes a solvent. Additional copper of 0.001 to 0.002 in (0.025 to 0.050 mm) thickness is then electroplated on the copper circuitry. A solder mask, as described in A2d below, is usually applied at this point. The board surfaces not covered with the solder mask are then coated with tin-lead solder by a dip or wave machine. Excess solder is removed by a flow of hot air (*hot air leveling*) or hot oil (*hydro squeegee*) to a thickness of 0.0012 in (0.03 mm) or less. This procedure provides surfaces amenable to later solder connections.

In the second method, the resist or photoresist is applied and processed as above except that the areas protected by the resist are the areas between the circuit paths rather than the circuit paths themselves. A washing operation then removes the unhardened resist that covers the intended circuit paths (traces). The next step is electroplating with copper, adding 0.001 to 0.002 in (0.025 to 0.050 mm) to the copper thickness of the circuit paths. Then, another metal, usually tin/lead solder, is electroplated over the copper. Sometimes, nickel, pure tin, or a nickel/tin alloy is used instead of tin/lead. The tin/lead protects the circuits from copper corrosion that could impair later soldering and protects the copper traces from an upcoming operation that involves etching. The resist covering the spaces between circuit paths is then removed by spraying the board with a solvent. The board then is immersed in an acid bath that etches away the unwanted copper foil in the non-circuit areas, but the circuit paths are protected from the etchant by the solder layer. The solder surface may then be chemically stripped from the copper so that a solder mask can be applied, because these masks do not adhere well to solder surfaces. (See A2d.) Then, after the solder mask is applied, tin-lead solder is coated on unmasked areas by dip or wave soldering and hot air leveling or by using a hydro squeegee (hot oil leveling). This operation sequence, using a photoresist, is shown in Fig. 13A1b.

A1c. ***additive method*** - is used much less than the subtractive method because it is more complex and incurs higher costs. However, it has been found to be useful in making the small boards used in packaging multiple integrated circuits, i.e., when several chips are combined in the same protective package. (See *multiple integrated circuit packages* in N1 below.) In this approach, a thin coating of a dielectric material is deposited on a substrate of silicon or ceramic and a layer of copper, or another conductor, in the wiring pattern, is then plated onto the substrate. The wiring pattern is produced by thin-film photolithography methods. (Patterned etching of full films may also be employed for multiple packages.) The package may include repeated thin-film layers of dielectric and conductive materials. Tantalum, titanium, tantalum nitride and gold are also used. Copper posts, plated with additional copper, are used to connect conductors on different layers. Another dielectric layer is then deposited and the posts are exposed. The next interconnect layer is plated and makes contact with the posts. Additional layers of dielectric and conductor and additional copper posts are added. Thin-film resistors and capacitors may be incorporated in the circuit. Circuit paths and spaces between them may be as small as 0.002 in (50 um).[9]

The additive process is also used with thick film (See K3a6.) layers in hybrid circuits, multichip modules, passive discrete devices, and in other applications where functional requirements and space availability permit larger circuit features.

A1d. ***making photo masters and masks*** - for screens, resists and photoresists. The process starts with the design of the circuit and its arrangement on the printed circuit board. Circuit board design is a computer-aided-design procedure. Very sophisticated programs are available for use in board design, and have enough capability to be called by some, "Design Automation".[7] Design limitations are entered into the computer for such factors as circuit path width and spacing, desired board size and shape, desired and necessary locations of critical components and external connections, necessary spacing of devices, size, shape and number of connections of "chip" packages. The circuit designer enters a schematic design for the circuit, basically a list of all the connections. The computer then takes over and attempts to make the required interconnections while meeting all the other necessary parameters. The program notifies the designer of any conditions that cannot be met and some changes or compromises may have to be made by the designer. Before arriving at a final board configuration, the computer program tries many alternatives and, ideally, arrives at an optimum design. As he examines the computer's solutions, the designer may see alternatives not previously conceived of and may modify his instructions to the computer. When a final solution is reached and approved by the designer, the computer can feed data on the circuit dimensions to a

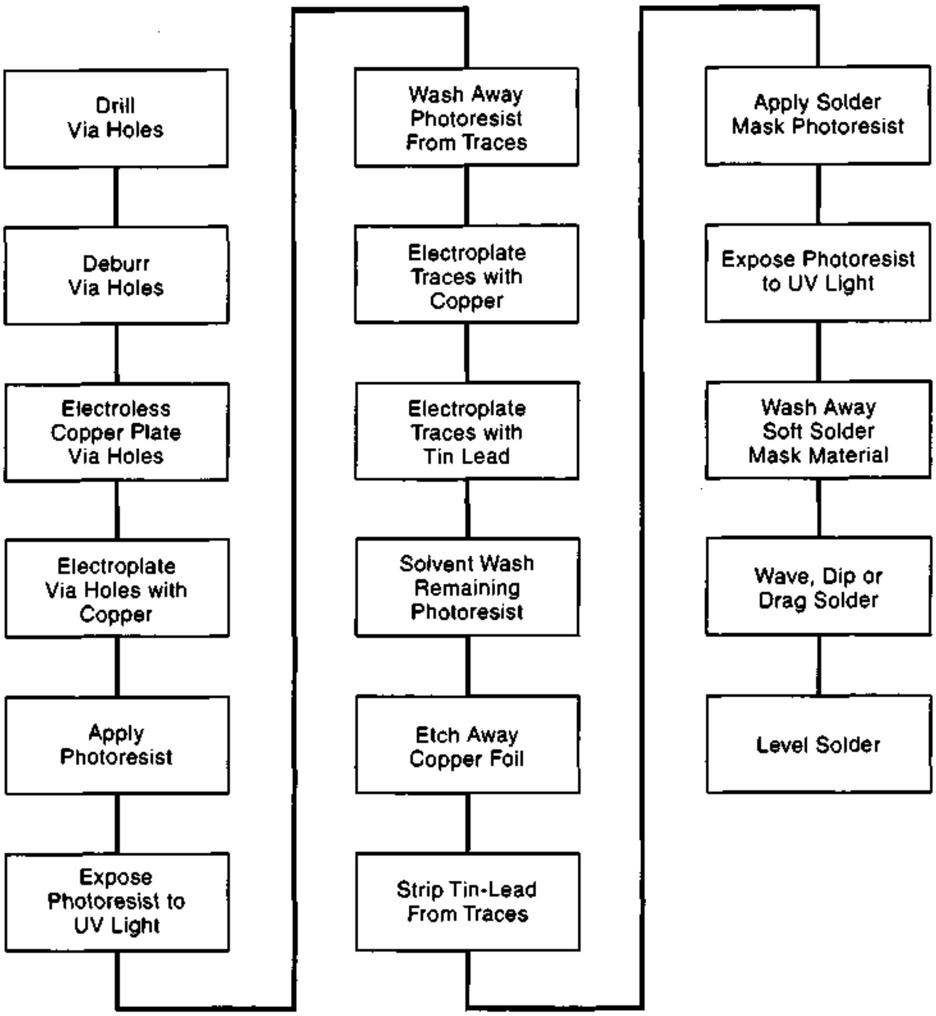

Fig. 13A1b The operation sequence for providing circuit paths to a double-sided board by a common subtractive method. The sequence includes the operations involved in making via holes. It assumes that photoresists are used for masking the board for electroplating of circuit paths (vias) and for applying a solder mask. A plating of tin-lead supplies a mask for the etching operation that removes copper foil from unwanted areas of the board.

laser plotting machine that creates a highly accurate master photographic image of the circuit on film or sensitized glass. This image may be reduced in size by photographic techniques to make photoresist masks, designs for screen printing, fixtures and numerical control programs for hole drilling and other operations on the board.

A1e. ***screen printing the masks*** - follows the same basic method as when silk screening is used to decorate and identify other products. In addition to its use in applying resists, screen printing is used to print product identification and assembly information on the circuit board. It is also used to coat circuit boards with solder mask. See 8I7b and 9D4b for descriptions and illustrations of the screen printing method. Much screen printing of circuit boards is done with automatic equipment. Screen printing of resists is the most critical and demanding of the many applications of the technique.

A1f. ***stripping resists from printed circuit boards*** - The usual stripping agents for resists on printed circuit boards are alkaline aqueous solutions. A common agent is a 2% solution of sodium hydroxide (NaOH). It is applied in a dip tank at a temperature of 125–140°F (52–60°C). The boards are then rinsed with a water spray. These agents work well with resists that are formulated to withstand acidic solutions, such as those involved in electroplating and other acidic treatments, but can be removed with alkaline strippers. Some manual or automatic scrubbing may also be part of the operation. Also used, especially when a stronger stripping agent is required, are semiaqueous solutions that contain, in addition to sodium hydroxide or other alkaline, 10% or less of butyl carbitol, triethanolamine or butyl cellusolve. Flammable hydrocarbons and chlorinated solvents, previously used for stripping resists from printed circuit boards, are no longer in common use because of safety and environmental concerns. Spent alkaline strippers are neutralized with acid before disposal.

A2. *other board operations*

A2a. ***hole making in boards*** - In addition to the via holes mentioned above (for connections to the other side of a board or to internal circuit pathways), holes are drilled or punched to receive through-hole devices and for use as tooling holes to provide positive location of the board for further operations. Holes are normally drilled on CNC (computer-numerically-controlled) machines and through-holes are drilled with the boards stacked. Once the stack is positioned on the drill table, the operation proceeds automatically. Machine brush deburring follows drilling. The CNC machines often used also have the capability of changing drill bits when they wear or break.

Like via holes, insertion holes for through-hole devices may also be plated to provide large surfaces for soldering as well as connections to the circuit paths.

Tooling holes are usually drilled near the edges of the stack of panels, usually prior to other operations on the stack. Pins, inserted in these holes, hold the panels together while other holes are drilled. The pins extend below the bottom panel and fit into matching holes in the drilling table or fixture to locate the stack accurately for further drilling. A layer of disposable material (of phenolic, paper, or aluminum foil) may be placed on the top and bottom of the stack. They provide an entry layer on top of stack and an exit layer on bottom to reduce burrs and wipe chips from the drill bit as it is withdrawn.

Another drilling operation may take place after the board wiring is completed, to clean any unplated tooling or mounting holes of extraneous mask or plating material.

A2b. ***contact finger plating*** - Contact fingers are metal-surfaced tabs that fit into connector sockets. When the tabs are to be finish plated, plater's tape is applied to mask the board's other circuitry and tin lead solder is stripped chemically from the fingers. The copper surfaces of the fingers are then scrubbed and rinsed and they are electroplated with a barrier coat of nickel, followed by a layer of gold, the preferred metal for surfaces of such contacts. Although these operations can be performed manually and individually, in current practice, all the operations after taping are performed on automatic plating machines developed for the application.

A2c. ***solder fusing*** - Fusing and leveling of electroplated solder pathways ensures that the surfaces are truly wetted by the solder, ensuring full solderability. It also corrects any plating defects that may exist. The operation involves fluxing the circuit board, and heating it by one of a number of methods: infra-red radiation, immersion in hot oil or another hot liquid, immersion in liquid solder, or vapor-phase heating. The molten solder is then leveled mechanically, by pressurized liquid, or hot-air knives. The most advanced fusing arrangement is with a conveyor that moves the boards through infra-red ovens and cooling, cleaning and drying chambers.

A2d. ***solder masks*** - Solder resists (masks) are placed on the circuit board to ensure that only exposed areas of the board are coated with solder during wave, drag, or dip soldering. They prevent solder bridges from forming across dielectric areas of the board between traces, pads, lands, and holes. The masks are made from epoxy or other thermosetting plastic materials that remain on the board and provide protection to it, and increased insulation between circuit paths and components. Screening and photographic methods are used to apply the mask material. With the screening method, the thermosetting material is screened on and cured with ultraviolet light or heat. Photomasks provide a more accurate but more expensive approach and are used for finer-pitched boards. The wet or dry photographic film is applied to the board and processed with a light exposure, development of the film, and removal of the unwanted portion. Wet film is applied by spraying, dipping, curtain coating or roller coating. Dry film is laminated to the board with vacuum equipment.

Temporary solder masks may be applied by similar methods to portions of the board to shield them during wave soldering. Dummy plugs, tape, or precut shapes are sometimes temporarily assembled to the board for the same purpose.

A third type of coating for unassembled boards is a temporary solderable protective film coating. This type of coating protects circuit and pad areas from contamination with dust or dirt and from tarnish during storage before soldering. The coating typically is removed automatically by the heat of soldering or the activity or solvent action of the soldering flux.

A2e. ***separating boards (depanelling)*** - Individual circuit boards are separated from a panel of several boards by CNC (computer-numerically-controlled) routing machines. Routing cutters of 1/8 in (3 mm) diameter are commonly used. Beveling or chamfering, to put a tapered edge on contact fingers, is an accompanying operation to routing. It is performed by an angle-ground or tilted CNC routing tool. Slots and grooves are sometimes machined into the board with the same equipment. An alternative board separation method, less common, is blanking but it entails the expense of making a blanking die for each board design.

A2f. ***silkscreen identification*** - various identifying and instructional information is printed on the circuit board as one of the final bare-board operations. Conventional screen printing techniques are used with epoxy ink followed by drying or curing.

A3. ***multilayer boards*** - are made by laminating double-sided boards together with internal layers of board material. If two double-sided boards are combined with an internal dielectric board layer, a four-layered board will result. This construction is called *cap sheet lamination.* Another method for a four-layer board, the *foil lamination* construction, uses on double-sided board in the middle, covered on top and bottom with a dielectric board layer, and then, on each of them, an external layer of copper foil. Fig. 13A3 shows both arrangements. Boards with 16 or more circuit layers can be created if enough layers of lamination and enough boards are combined. The internal wiring traces are completed before lamination. Also before lamination, sheets of prepreg (uncured reinforced plastic dielectric material), and copper foil, if used, are sheared or purchased to the panel size needed and are cleaned. They and the boards may be drilled for tooling holes to maintain alignment during the balance of the process. The pitch width is normally narrow for multilayer boards since they are used in more sophisticated equipment with more complex and more concentrated circuitry.

The complete procedure for cap sheet board construction is as follows: 1) In several steps, the copper-foil board surfaces are treated with resist, and non-circuit areas of copper are etched away, leaving copper circuit traces, as is done with regular single- or double-sided boards. 2) surface oxidation - These circuit traces are subjected to heated oxidizing chemicals to provide a black copper-oxide surface which improves adhesion of the laminate. 3) The boards are rinsed, and then baked to remove absorbed moisture. 4) lamination - The boards are laid in a carefully aligned stack with layers of *prepreg*, uncured reinforced plastic lamination sheets. (Epoxy/glass sheets are most common.) Temporary "caul" plates, often with alignment pins, hold the stack in alignment. 5) curing - The stack is placed in a press that has heated platens and the stack is kept under pressure until the lamination plastic has cured. This may be done with the stack, and possibly the press, in a vacuum, to reduce the amount of pressure needed and reduce slippage. 6) cooling - The stack is cooled under pressure in another press. 7) stress relieving - The stack

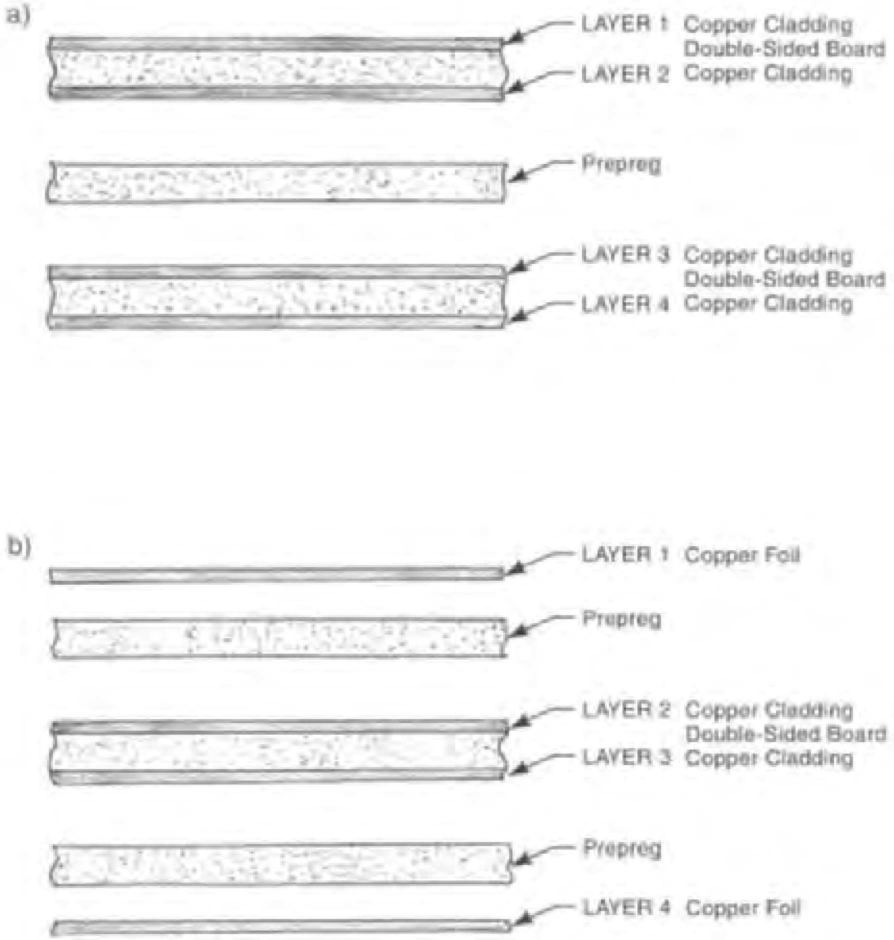

Fig. 13A3 Two ways to construct a four-layer, printed circuit board. With both methods, sheets of *prepreg*, partially cured sheets of epoxy resin reinforced with glass cloth, are used. View a) shows cap sheet lamination, using two double-sided boards (with circuit paths delineated) and one sheet of prepreg. View b) shows one double-sided board with circuit paths, two prepreg sheets and two sheets of copper foil. In both examples, the sheets are bonded together with pressure and sufficient heat to fully cure the epoxy. Multilayer boards with fewer or more layers are similarly constructed.

may be baked in an oven for several hours at about 325°F (160°C) to reduce internal stresses and avoid warpage. 8) Caul plates are removed and any plastic flash is removed. Edges are trimmed, if necessary. 9) Drilling for vias can now take place. Drilled holes are deburred. 10) Drilled via holes are copper plated by the electroless method. 11) Solder masking and electroplating of solder for external surfaces, as with double-sided boards, follows.

The procedure for boards with the foil lamination construction is similar. Internal double-sided boards are processed to produce copper circuit traces having black oxide surfaces, with the operation sequence outlined above. Boards are rinsed, baked, and stacked with layers of prepreg between the conductive surfaces and the layers of cleaned copper foil on the top and bottom of the stack. The stack is cured, cooled, and stress relieved as outlined above. Tooling holes are added if not already in place and via holes are drilled, deburred and electroless copper plated. The copper foil surfaces of the multilayer board are converted to wiring patterns with the methods outlined above, including plating. Solder masking is applied and solder plating, as with double-layer boards, follows.

Multilayer boards are also made using the additive approach.

A4. ***making flexible printed circuit boards*** - These boards use heavy flexible film as a base instead of a rigid, glass-reinforced board. Originally used simply for carrying multiple leads between components that have some motion between them, these boards now contain complex circuits including those that are double sided and, sometimes, multiple layered. Three materials are prominent in construction of flexible boards. All are thermosetting plastics with high temperature resistance: polyimide (Kapton®) plastic film is used in the most critical applications and has the highest temperature resistance and highest cost; liquid crystal polymer (LCP) film has similar characteristics at a somewhat lower cost; and polyester film is used in less critical applications where low costs are more important. Electronic devices are surface mounted on these films and are connected primarily with reflowed solder, though some boards use conductive epoxy instead. Traces on the boards are of copper. Copper is provided by foil that is bonded to the film base, and traces are produced in the copper by the subtractive process. (See A1b.) Traces may be coated with an organic coating to preserve solderability, by tin electrolytically, nickel by electroless plating, or silver by immersion-dispersion. Boards are often given a protective elastomer coating (*conformal coating*. See M.) after assembly is complete. This coating is cured by ultra-violet energy that passes through the flexible base film and cures the coating on both sides.

B. Wiring and Populating Boards

Fig. 13B outlines the operation sequence for populating boards (assembling devices to them) for both those using through-hole connections and those using surface-mount construction.

B1. ***populating boards with through-hole connections*** - See Fig. 13B1, view a) for an illustration of through-hole connections. Assembling

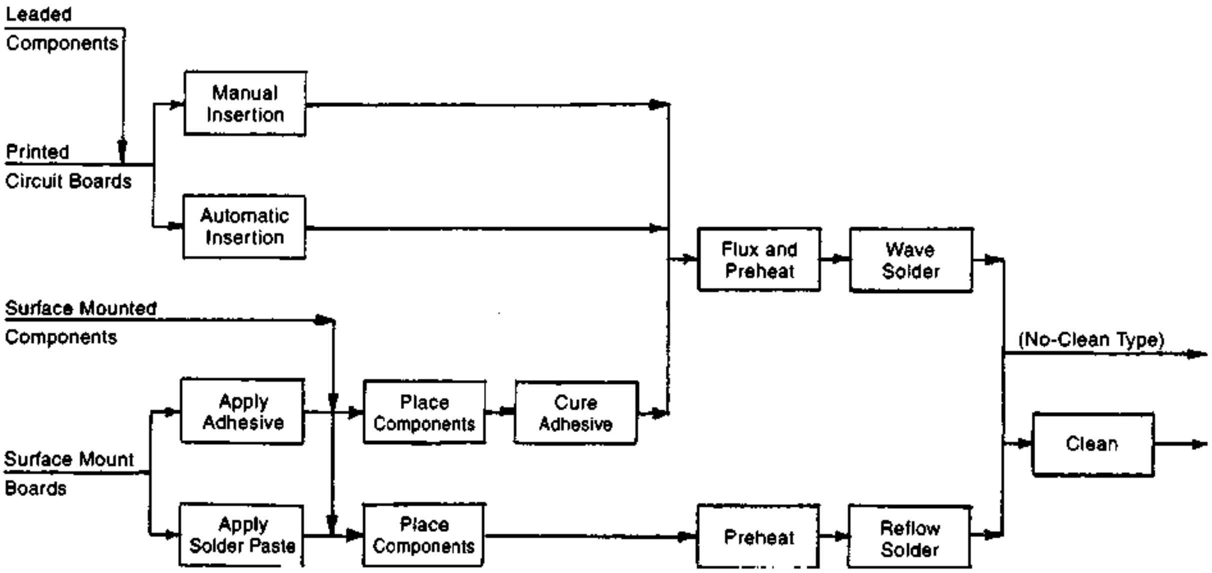

Fig. 13B The operation sequence for populating printed circuit boards, both those using leaded components (those with leads for through-hole connections) and boards populated with surface-mounted components.

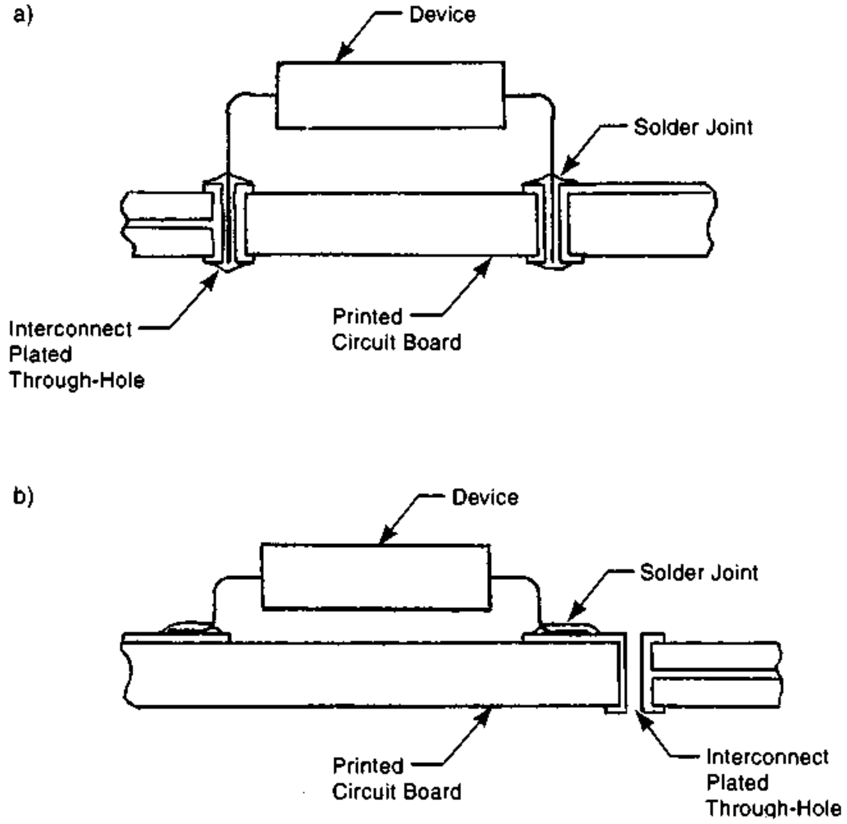

Fig. 13B1 Two common types of connections of electronic devices to printed circuit boards: a) through-hole attachment, b) surface-mount attachment.

through-hole components to circuit boards can be done by hand, with the aid of semi-automatic machines or, when production quantities make it justifiable, by high-speed, fully-automatic, insertion equipment. The semi-automatic machines have computer control that is programmed to move the board for each device to be assembled so that the correct through-holes are in a central position. The operator then inserts each device manually at the same central location on the machine. The computer display advises the operator which device is to be inserted next and displays any special insertion instructions. The leads extending through the board are cut to the proper length and clinched automatically on the underside of the board to retain the component in position, and surfaces are provided for solder connection on the underside. Fig. 13B1-1 illustrates such a machine. When fully automatic equipment is used, the insertion of the lead wires through the board is done by the equipment and the same automatic trimming and crimping steps are part of the operation. The first stage of such machines consists of equipment that bends and cuts the lead wires of each component. The component wires are then inserted by the machine into the corresponding holes in the circuit board; the lead ends are trimmed and clinched to the board. Automatic assembly of components with leads is common in household electronic equipment such as television sets, where circuit boards are not required to be highly compact and sufficient hole diameter allows for easy insertion of lead wires. Versatility of automatic equipment is provided by computer control. When manual insertion is used, a punch press operation, with the proper tooling, cuts and bends the leads of the components to fit the hole spacing of the circuit board.

B2. ***assembling surface mounted components*** - Surface mounting involves the attachment of

Fig. 13B1-1 A workplace for semi-automatic assembly of leaded components to printed circuit boards. The machine moves each circuit board in X and Y directions to bring the assembly point for each device to the same central location. The computer identifies, for the operator, which component is to be inserted and shines a light on the board location where the component is to go. After insertion, the component leads are automatically cut to length and clinched. *(Photo courtesy Contact Systems, Danbury, CT.)*

electronic components to a circuit board without using through holes or other terminals for the connection. Instead, the leads or other contacts of the components are soldered to conductive pads on the surface of the board. See Fig. 13B1, view b), for an illustration. The components are normally placed by specialized, high speed, pick and place equipment; manual placement is difficult to the accuracy required for fine-pitch surface mount technology. Components are fed to such machines pre-attached to tape (The tape is perforated like a movie film to ensure proper registration.), in magazines, on trays and, in some cases, with simpler devices, in loose bulk. Components to be fed from tape, trays, chutes, or some other system where they are in uniform orientation, may be put into that orientation in a preliminary operation with vibratory or other orienting equipment. With fine pitch surface-mounted boards, extremely accurate orientation and placement of components is vital, and the equipment available provides this. Usually, solder paste is applied to the connecting pads and is tacky enough to hold the devices in place until the solder paste is melted and solidified ("reflowed"). When wave, drag or other soldering methods are to be used for surface-mounted devices on the underside, an adhesive is applied to the board where the body of the device will rest. When adhesive is used to secure the device before (wave) soldering, the adhesive placement must also be accurate to make sure that adhesive does not cover parts of the pads to be soldered. Adhesive or solder paste is applied by stenciling, silk screening, use of syringes, or special dispensing equipment that normally is fully automatic if production quantities are high. Fig. 13B2 shows a circuit board assembly system for surface

Fig. 13B2 An automatic assembly line for printed circuit boards with surface-mounted devices. All four machines are fully automatic, and the first three use machine vision to control the correct placement of parts and materials. The first of the four machines (at left) is a screen printer, which deposits solder paste on each pad that is to receive a lead from the devices to be assembled. The second and third machines pick and place circuit devices from paper or plastic tape fed from reels visible in front of the machines. The fourth machine is a convection reflow oven. It supplies heat with the proper heating profile to melt the solder paste, electrically connecting and mechanically fastening the devices to the board. *(Courtesy Universal Instruments.)*

mounted devices with two pick and place machines. Fig. 13B2-1 shows the placement of a device on a board.

The operational sequence for assembling and soldering a board with surface mount technology using solder paste is as follows: 1) preparation/ cleaning of the board before assembly, 2) application of solder paste to the pads to which components will be soldered, 3) placement of electronic devices on the board, 4) melting or "reflow" of the solder paste to secure and to electrically connect the installed components. 5) cleaning of the board of flux residue, if essential. No-clean pastes, not requiring this operation, are preferred for all but the most critical applications.

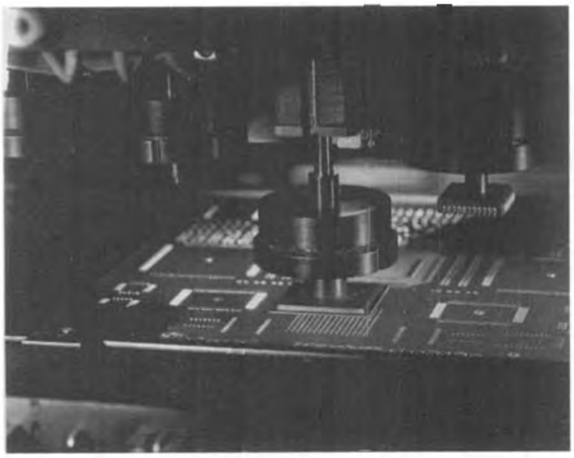

Fig. 13B2-1 Placement of devices to the surface of a board by a pick and place machine. This machine uses a four-spindle head. Four devices are brought to the board at the same time and are positioned to the board one at a time. The component in the foreground is an integrated circuit to be fastened to the board by solder from a ball grid array of solder spheres. There is one solder sphere for each pad shown below the device. The spheres, converted by melting to bumps of solder, are on pads at the bottom of the IC and are not visible in the picture. Devices are held on the "nozzle" by vacuum. The spindle lowers the device to the board and the vacuum is released with an "air kiss" - a slight puff of air to seat the device on the soldering pads. The component in the background, waiting to be placed on the board, is a plastic leadless chip carrier ("PLCC") that will be held on the board with solder paste. *(Courtesy Universal Instruments.)*

B2a. ***dispensing adhesives*** - Adhesives used to hold surface mounted devices are dispensed with equipment very similar to that used to dispense solder paste. Screen or stencil printing, syringes and dispensing guns are employed and, for high production applications, the operation is highly automatic. Adhesives are used to hold surface mounted devices on the underside of a double-sided board during reflow soldering. Without an adhesive, the underside devices may loosen and fall as the solder paste flows and loses its tackiness.

B2b. ***using solder paste*** - The viscosity and tackiness of standard paste are high enough for it to stay in place when applied to a printed circuit board and for it to hold surface mounted devices that are placed in it. The paste is dispensed to the board by one of several methods described below. The electronic devices are then placed on the board so that their leads rest on the pads that have been coated with paste. When the board is heated - with one or more of a number of methods - the solder melts or "reflows", connecting the devices electrically to the board and also fastening them mechanically. Solder paste is also used with through-hole devices. (Also see Chapter 7, section A1c, for other solder paste information.)

B2b1. ***syringe dispensing of solder paste (pressure dispensing)*** - can be a manual operation but, in production situations, dispensing solder paste is an automatic operation and the dispensing action is usually pneumatically powered. The common method, with automatic equipment, is to locate the circuit board on an X-Y table under computer control. Z-axis motions may also be made for complex circuit boards. The table shifts, and the dispensing is actuated when the syringe is over the pads that are to receive the solder paste. Solder paste for this method is normally supplied from cartridges supplied by the paste manufacturer. Some equipment is made with multiple dispensing nozzles to provide higher production rates.

Nozzle or needle openings are typically 0.016 to 0.063 in (0.4 to 1.6) mm in diameter although there is interest in smaller sizes.[4] The nozzle is usually held at an angle of 40 to 75 degrees from horizontal.

When performed manually for prototypes or limited-quantity production, the operator positions a syringe over the pads by hand and dispenses a controlled amount of solder paste. With equipment designed for manual operation, the amount of paste dispensed at each point can be preset to provide consistent application.

B2b2. ***pin transfer dispensing of solder paste*** - uses a number of vertical pins on an upper plate. The pins are mounted so that they align with the pads on the circuit board that are to receive solder paste. The pins are first dipped into the paste to a predetermined depth. They are then moved to the circuit board and brought into contact with it so that each pin point contacts a soldering pad. This causes solder paste to be deposited on each pad. The method is suitable for accurate placement of an amount of paste on each pad Fig. 13B2b2 illustrates the process schematically. By making the pins spring-loaded, this approach can be used for boards that are curved or have soldering surfaces at different levels.

B2b3. ***screen printing of solder paste*** - Conventional screening techniques have been adapted to apply solder paste to circuit boards, using solder paste in place of the ink used with conventional screen printing. A fine-mesh woven screen, held tautly in a metal frame is coated with a plastic material in certain areas and positioned against the circuit board. Solder paste is deposited on the screen and a rubber-like squeegee (usually of polyurethane, of 60 to 70 durometer) is drawn either by screen printing equipment or manually, across the screen. In areas where it is desired to deposit paste on the circuit board, openings in the coating allow the paste to be pushed through the screen and deposited on the board. Much of the screen is coated and does not allow the paste to pass through it. The depth of the deposited paste depends on the diameter of the wires of the screen and the thickness of the screen coating. Screen

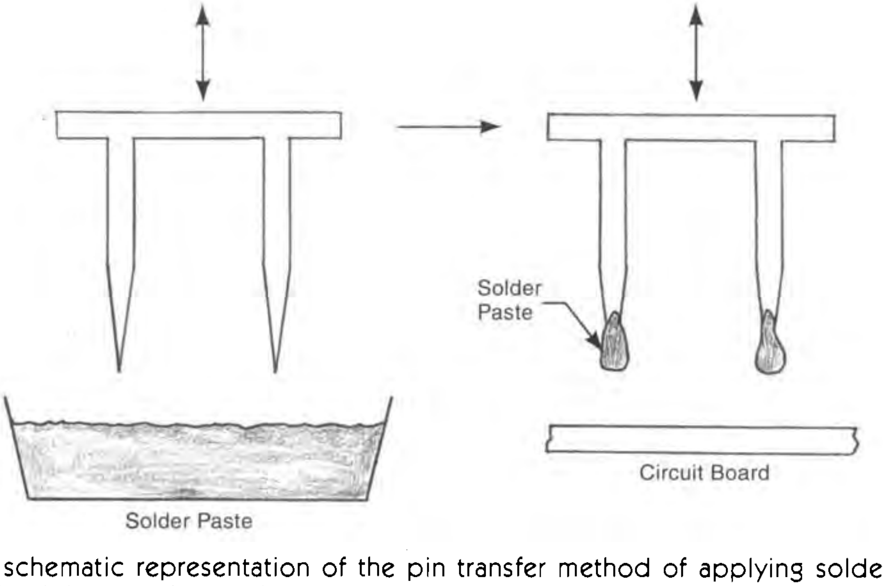

Fig. 13B2b2 A schematic representation of the pin transfer method of applying solder paste to the locations on a circuit board where solder connections are to be made. The pins, spaced exactly in the pattern of soldering pads on the board, are dipped together in a container of solder paste, picking up an amount on each pin end. When the pin ends touch the circuit board, the desired amount of solder paste is deposited on the board.

coatings are typically 0.008 in (0.2 mm) or less in thickness but can be as thick as 0.020 in (0.5 mm). The location of the paste on the board can be well controlled, provided the screen and board are in good registration with one another and the screen does not stretch. The screen is usually constructed of stainless steel to control stretching and provide wear resistance. The screen is usually mounted about 1/16 in (1.6 mm) above the board during the operation to prevent the screen from sticking to the board. The screen coating is applied by either dipping and drying or by manual placement of a film of coating material on the screen. In either method, the coating is "developed" by exposure to ultraviolet light which cures the coating except in areas that are to be open. The undeveloped coating is then removed. Photographic techniques are used to control the locations of the screen openings accurately. The screen printing process is a quick and consistent method for applying solder paste and flux. The approach is limited to flat circuit boards. The operation can be fully automatic in high-production situations where both the board handling and paste screening are fully mechanized. The operation is semi-automatic when board handling is manual but paste dispensing is automatic. It is fully manual with a fixtured board location, a hinged screen and squeegee movement by hand. This approach is used for low quantity and prototype work. Automatic equipment may use machine-vision apparatus to ensure that the registration of the paste on the board's solder pads is exact.

B2b4. ***stencil dispensing of solder paste*** - has become the process of overwhelming choice. It is similar to screen dispensing except that a mask made of sheet metal is used instead of a screen, but occasionally the mask openings are combined with a stainless steel mesh for reinforcement. As in screen printing, a rubber-like squeegee forces the solder paste through the stencil openings and onto the desired locations on the circuit board. The thickness of the sheet metal determines the thickness of the solder paste deposit. Typical thickness are in the range of 0.005 to 0.012 in (130 to 300 μm). Stencils are either cut from sheet metal or formed by electroforming (See 2L2.). Cutting stencils from sheet metal involves either photochemical blanking (3S4), or laser cutting (3O). The metals commonly used are stainless steel for cut stencils and nickel for electroformed stencils. Photochemical blanking normally involves the use of two resist coatings, one on each side of the stencil sheet, exposed and developed with opposite-side images in alignment with each other. The chemical etching takes place from both surfaces. The etching operation is followed by electropolishing (See 8B3.) to remove a sharp edge, if it exists where the etching for each side intersects, and to smooth the whole surface of the stencil. Laser-cut stencils may also be electropolished. Electroformed stencils are made by first coating, imaging, and developing a photo-resist on a substrate. Then electroforming takes place in the openings of the photoresist to create a stencil that is removed from the substrate. As with screen dispensing, stencil dispensing is limited to flat circuit boards, and stencils are less forgiving than silk screens of minor variations in the board surfaces. However, stencil printing is usually more consistent, and alignment with the board is easier to maintain. Stencils are better adapted than screens to fine pitch spacings, especially the laser-cut and electroformed stencils. Metal stencils also have a considerably longer life though they are more costly than screens.

B2b5. ***submerged disk dispensing of solder paste*** - is used for dispensing solid or dashed lines of paste on a board. A rotating disk is positioned so that its edge is immersed in solder paste. As it rotates, the disk carries an amount of paste which, in turn, is deposited on a board that passes above it. The principle is shown in Fig. 13B2b5. A thickness control knife removes excess solder paste before the disk contacts the workpiece. The disk is usually made of nonmetallic material and can be of whatever width is needed for the solder paste deposit.

B2b6. ***dip coating of solder paste*** - is used occasionally in applying solder paste to the leads of components such as capacitors. The lead is immersed in solder paste in a tray or other container. Reflow follows assembly of the component to the board.

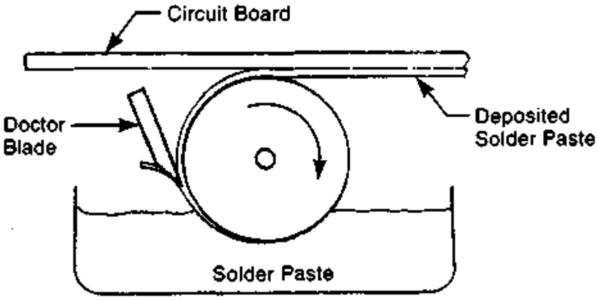

Fig. 13B2b5 The principle of submerged-disk dispensing of solder paste to a printed circuit board.

B2b7. ***roller coating of solder paste*** - to leads of capacitors or other devices is sometimes employed. A nap-covered roller, similar to a paint roller, is used. One common application is the coating of "nail head" ends of capacitor leads by manufacturers of such devices. The capacitors are arranged in a carrier so that they are all have the same orientation. A roller, coated with solder paste from a reservoir, is rolled over the row of "nail heads". The capacitors can then be assembled to circuit boards or other devices and the solder paste reflowed.[4]

B2c. ***using solder preforms*** - Solder preforms are solid shapes of solder manufactured by various methods of metal forming and cutting. Typical shapes are washers, disks, rectangular or square shims, rings, and other wire forms, spheres, sleeves and other special shapes. Typical preform-making operations are extruding, either with or without a flux core, rolling, ring forming and blanking. (These operations are described in general terms in Chapter 3.) Flux coating of preforms, when used, usually involves a spraying operation. Flux-cored preforms are usually made from flux-cored wire solder which may be flattened by being rolled into a ribbon and then blanked to the shape desired. The advantage of a preform is that it can supply the exact amount of solder needed for the joint and, if there is a flux core or coating, the exact amount of flux required. The amount of solder and flux supplied is also constant from assembly to assembly. High-quality, very uniform solder joints are possible. In many instances, the preforms can be placed with automatic equipment. Further economies result from the fact that all joints on a board or on a device or groups of them can be heated simultaneously.

B3. ***cleaning prior to soldering*** - Cleanliness of the surfaces to be joined is an important prerequisite of good solderability. Most cleaning of circuit boards and other electronic components is undertaken to remove foreign matter that may accumulate on the components from prior operations, handling and storage. The foreign matter includes dust, oils, wax, chips from machining the circuit board, and tarnish. Two methods are in predominant use for in-line cleaning, prior to fluxing and soldering: 1) vapor degreasing and 2) water washing. With both methods, care must be taken not to dislodge components assembled to the boards. Vapor degreasing using conventional equipment (See Chapter 8, section A2a3.), is quite satisfactory because it leaves the boards dry as well as clean and does not involve forces that may dislodge devices assembled to the board. An airknife may be used before the next operation (fluxing), to remove any trapped solvent and to cool the board to facilitate foam fluxing. Vapor degreasing has disadvantages from health and environmental standpoints, however. Water washing is more difficult because the force of water agitation or spray can dislodge components on the board. However, satisfactory results can be obtained. Saponifiers and other additives are included in the washing solution.

Ultrasonic agitation may be utilized in both kinds of cleaning if the board is immersed in a liquid. Drying after washing is essential. Baking may be required if the soldering operation immediately follows cleaning.

Components that require more aggressive cleaning because of chemical contamination, corrosion, or to remove protective coatings, may undergo vapor blasting, acid treatment, brushing or scouring. Great care must be taken in such operations to avoid damage to softer materials or dislodging assembled components.

B4. ***prebaking before soldering*** - is an operation that often is not required, but is used when it is necessary to remove volatile materials from the circuit board. These materials include trapped solvent or moisture from a cleaning operation, the volatile materials in the laminated board itself, and moisture that may be absorbed in the board or assembled components during storage and assembly. Baking usually takes place with temperatures ranging from 180 to 250°F (80 to 120°C) for periods of 1.5 to 16 hours. Lower temperatures and shorter times can be used with vacuum ovens (with approximately 1 torr of vacuum).

C. Soldering Processes

C1. ***flux application*** - immediately precedes soldering. The flux removes tarnish from the surface to be soldered and provides some mild cleaning action. Flux keeps the surface clean until the soldering is completed by protecting the surface from oxidation that would otherwise occur during heating. It removes tarnish that may develop on the surface during soldering, and aids in wetting the surface with solder. Acid and rosin fluxes are used. Rosin is a natural product that has acidic properties when heated, but which is relatively inert at room temperature. Typically, the joint surface is coated with flux before being put in contact with solder, though, sometimes, flux-cored wire solder is used in manual soldering and in some automatic operations. Solder paste contains flux and thus it does not have to be applied beforehand. Flux is applied to printed circuit boards as foam, by spray, or by wave application, similar to that used to apply molten solder.

C1a. ***dip fluxing*** - can be used to apply flux to the ends of leads and the edges of circuit devices that are to be selectively fluxed. The operation may be manual for repair or small quantity work, but is sometimes made automatic by conveying the parts so that the solderable portion passes through liquid or paste flux. A wiping or brushing stage may follow to remove any excess.

C1b. ***brush application of flux*** - is primarily a manual method used in touch up or hand soldering of some special components, or to selectively apply flux to critical areas of a circuit board. It can be mechanized in a set up that utilizes a rotary brush that is partly immersed in liquid flux; the brush also contacts the underside of circuit boards as they pass on a conveyor.

C1c. ***foam flux application*** - A porous stone, immersed nozzle, or other diffuser in a bath of liquid flux, emits an airstream that is divided into many elements which form small bubbles in the liquid, creating foam. The foam is contained in an open chimney-like enclosure, and rises to contact the circuit boards that pass above the enclosure. The flux adheres to the circuit board. The liquid flux includes a solvent or vehicle that dissolves rosin or other flux material. The solids content may be quite low, but still sufficient for good fluxing action. Foam fluxing normally is part of an automatic soldering sequence, with the circuit boards being conveyed through the fluxing station. Sometimes, a row of stationary brushes is installed to remove excess flux as the circuit board passes from the flux foaming station.

C1d. ***spray application of flux*** - can provide accurate dispensing of flux on circuit boards, though the need for overspray removal may complicate the operation. Three basic methods are used to create the spray of a flux-containing liquid: (1) *nozzle spray* uses air or gas atomization and one or more spray nozzles to apply the flux. (2) *rotary screen application* uses a rotating cylindrically-shaped screen, whose axis is at right angles to the path of the circuit board. The cylinder is partially submerged into the liquid flux; its rotation carries the flux with it and an air blower forces the flux up against the circuit board. A sensor turns on the air flow only when a circuit board is in position. A mask ensures that the spray is confined to the desired area. This method provides uniform flux application over the width of the board. 3) *ultrasonic application* - Liquid flux is brought into contact with an ultrasonic horn whose rapid vibration atomizes the flux into fine particles. These are then directed to the circuit board by an air or gas jet. An additional air curtain may be used to further distribute the spray, and the ultrasonic horn may move when selective flux application is desired. Another method uses an X-Y table under computer control to move the circuit board, so that the flux is applied only to those board areas where soldering will take place.

In all these spray methods, a mask may be used between the spray source and the circuit board to confine the sprayed flux to areas where it is needed. Fig. 13C1d shows the rotary screen method schematically.

C1e. ***wave fluxing*** - uses the same principle as wave soldering to provide a ridge or standing

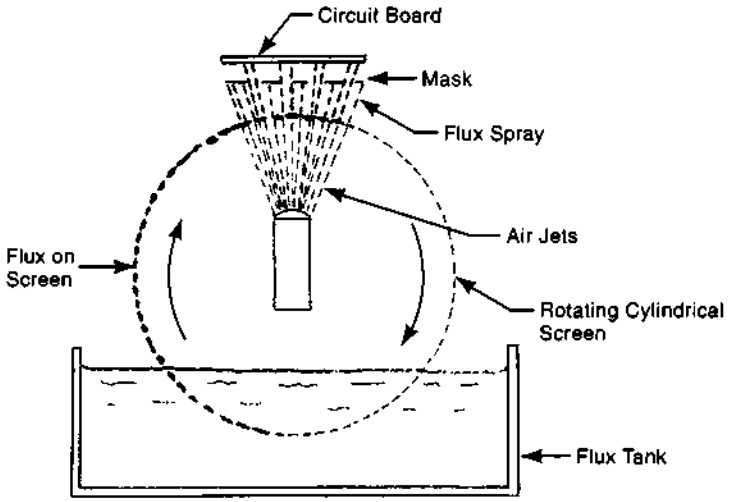

Fig. 13C1d The principle of the rotary screen flux spray. The cylindrical screen rotates in a bath of liquid flux and picks up some flux in its openings. Droplets of the flux are blown by air jets from the screen to the printed circuit board above. A mask prevents flux from hitting the board where it is not needed.

wave of flux that the circuit board can contact as it is conveyed through the fluxing station. The process can be run at a faster speed than foam fluxing and is used in high-speed automatic soldering lines. A wiping operation by brush or airknife in line with the fluxing may be used to remove excess flux after the board has passed through the wave.

C1f. ***roller fluxing*** - uses rollers that are often similar to those used for paint application. The method can be mechanized so that flux is applied as a circuit board passes on a conveyor. Flux application is uniform and the quantity applied can be controlled well. Roller fluxing is commonly used to coat both sides of a circuit board prior to infrared oven fusing.[3]

C1g. ***cored solder fluxing*** - utilizes solder in wire form where the center portion of the wire consists of flux rather than solder metal. The flux is in solid or paste form but melts as heat is applied to the joint and the wire solder. The flux melts before the solder, and flows to coat the joint surfaces. The method ensures that just the right amount of flux is deposited on the work. In electronics applications, cored solder is used chiefly for manual repair or touch-up soldering.

C1g1. ***making flux cored wire solder*** - is a multi-operation process. The first operation is casting the desired alloy in permanent steel molds to form extrusion slugs which are fed to an extrusion machine (2A3). In the machine, hydraulic or mechanical force pushes the solid solder alloy through a die that forms it into a hollow tube, typically of about 1/4 in (6 mm) in diameter. The extruder has a pot of molten flux with piping to feed it to the extrusion die in such a way that the flux flows into the hollow of the tube. The coarse hollow tube containing flux is accumulated on a reel. This reel then provides feed material to a drawing machine (2B2). In that machine, the hollow tube is pulled through a series of drawing dies, each with an opening slightly smaller than the diameter of the incoming tubing. As the tubing moves through the drawing machine, it is reduced in diameter, becoming wire solder. One or two drawing machines, each with perhaps a dozen progressively smaller dies, may be involved in the process, the number depending on the final size wanted in the wire solder. As the wire is reduced in diameter, it retains a center section of flux that has solidified as the wire has cooled. The finished wire solder is wound onto reels or small spools. The finished wire diameter may be as small as 1/64 in (0.4 mm), but 1/32 in, 1/16 in and 1/8 in (0.8 mm, 1.6 mm and 3 mm) are the more common sizes. *Solid* (non-flux bearing) *wire solder* is made in the same way except that there is no flux feeding system at the extruder and the extrudate is solid instead of hollow.

C2. ***preheating*** - circuit boards is part of a wave-soldering sequence, immediately preceding the soldering. It has the following purposes: evaporate volatile flux elements, melt solid flux constituents, start activation of the flux, reduce thermal shock to components when they contact molten solder, and reduce the time necessary for the circuit board to be in contact with the molten solder. Heating is effected by either radiation, convection or, quite rarely, hot plate conduction. Infrared devices are often used as a source of heat. Depending on the board type, heat may be directed at both the top and bottom of the boards. Quartz lamps with reflectors are often used with switches that activate them when circuit boards approach the preheating zone. Sometimes the heaters are controlled by sensors that read the temperature of the circuit board. Typical temperatures of the circuit board, when heated, are 180 to 270°F (80 to 130°C) depending on the type and thickness of the board.

C3. ***dip soldering*** - involves immersion of the solder joint into liquid (molten) solder. The solder pot then provides both the heat and the joint material. Usually, flux is applied to the joint beforehand by dipping, spraying, brushing or some other method. However, a molten flux layer may be used on the surface of the molten solder as a means of applying flux. The dipping process is mostly used to "tin" the ends of wire leads before soldering and has also been used to solder the through-hole connections of printed circuit boards. However, the process is inferior to wave soldering and is currently not widely used. The board is fluxed and moved so that the surface to be soldered contacts the surface of the molten solder, which heats and supplies solder to the joints. Surplus flux from the board must be moved aside so that it does not block the solder from wetting each joint. A rolling motion of the circuit board helps release flux and trapped gases. The surface of the molten solder must be skimmed before the workpiece is dipped; otherwise, dross (oxides) on the surface will interfere with the soldering operation. An oil layer may be maintained on the surface of the solder to retard or prevent dross formation.

C4. ***drag soldering*** - is a variation of dip soldering in which the circuit board is carried by conveyor and is pulled along the surface of the molten solder. The process is less frequently used, at present, having given way to wave soldering. The full operation includes a fluxing station, a preheating/drying station and a soldering station. A skimmer in front of the moving circuit board pushes aside dross that forms on the solder surface. A slight incline and a rocking motion may be used to release trapped flux and gases. Contact time with the solder is typically 5 to 8 seconds[2], longer than that involved when wave soldering is employed. Fig. 13C4 shows the process.

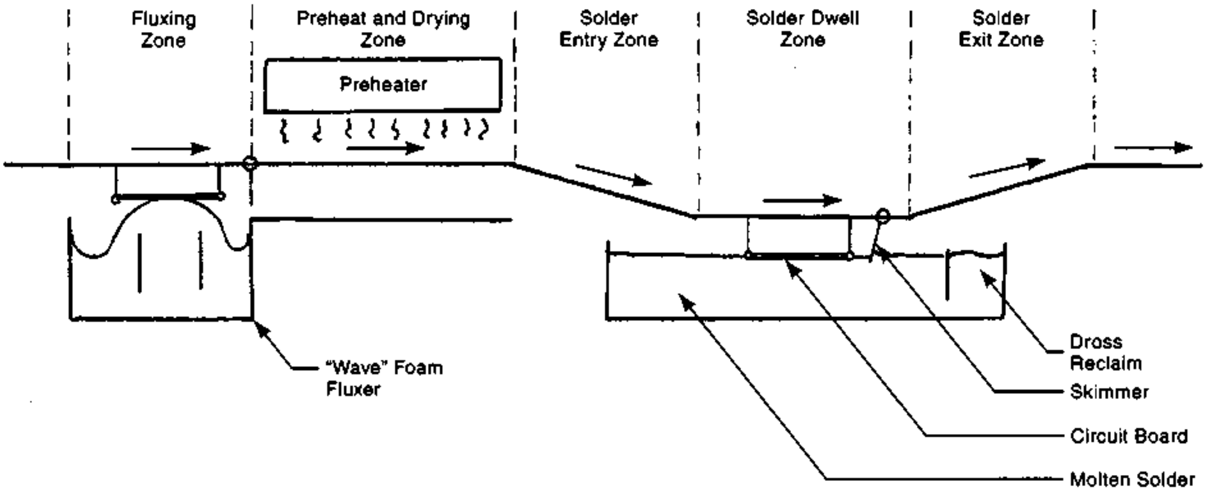

Fig. 13C4 A schematic view of the equipment and sequence of operations involved in drag soldering printed circuit boards.

C5. ***wave soldering*** - is a variation of dip soldering in that the workpiece, a printed circuit board, held in a conveyor, momentarily contacts liquid solder that both heats and feeds molten solder to the joints to be connected. Wave soldering differs from dip soldering in that the liquid solder is lifted as a standing wave, instead of remaining as a level surface in the container. This simplifies the immersion process by limiting the area of contact with molten solder to only part of the circuit board at one time, reducing the chance of overheating electronic components. The solder contacts only the underside of the board. The molten solder is pumped from an intake below the surface so that the wave is essentially free of dross. An oil coating on the molten solder, or an inert atmosphere blanket, may be used to control dross formation. The operation heats and wets (coats) the joints of both devices connected in through-holes and those that are surface mounted. It coats the wire paths on the board and fills plated through-holes in the board. The wave solder operation is illustrated schematically in Fig. 13C5.

The sequence of operations in wave soldering a circuit board in a typical wave soldering machine is as follows:

1) The circuit board, with electronic devices attached but not solder-connected, is fluxed by spraying, contact with flux foam, or by contact with a wave of liquid flux, generated with a method similar to that used in wave soldering. The step applies a coating of flux to the underside of the board.
2) The board is preheated to a temperature of 180 to 270° (80 to 130°) to drive volatile ingredients from the flux, to start the activation of the flux and to reduce thermal shock when the board contacts the molten solder.
3) Wave soldering then takes place while the board is still warm. Each portion of the circuit board contacts the molten solder for about 5 sec. Exposed metal surfaces, including leads or contacts of the attached devices, are wetted with solder. It also fills plated through-holes in the board. A hot airknife (air temperature above the solder melting point) may be used to remove excess solder in the form of solder bridges, solder balls, or other excess deposits.
4) The board is cooled at a controlled rate consistent with the sensitivity of the components to temperature changes. Blower-driven air may be used.
5) Board cleaning, for high-reliability applications, where no-clean flux is not used, is an important operation and immediately follows circuit board soldering. If no-clean flux is used, the cleaning operation is not required.

The wave soldering process is the prime mass-production method used to make electrical connections on printed circuit boards. When wave soldering

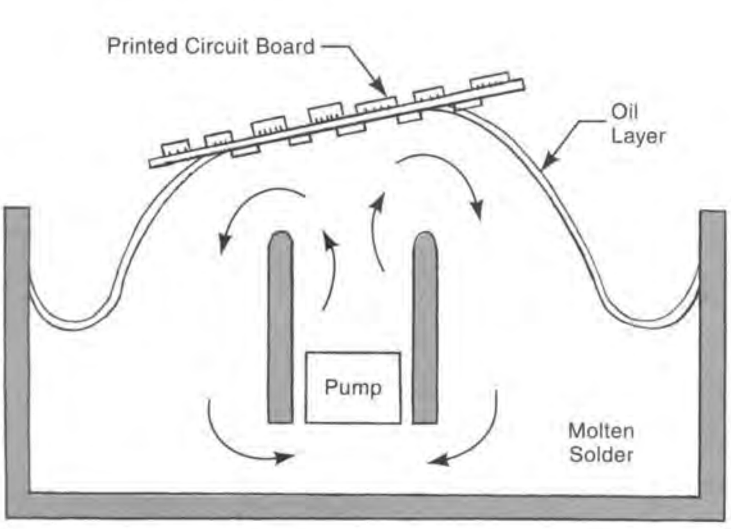

Fig. 13C5 Schematic representation of the wave-soldering process. The printed circuit board, with components attached, is moved against a "wave" of molten solder. Pads, leads, and wire paths on the board are wetted by and coated with solder. An oil layer on the molten solder inhibits the formation of dross.

is used to solder one side of surface-mounted boards (with adhesively bonded components), there is a tendency for air and flux volatiles to become trapped behind components during wave soldering, preventing the molten solder from making sufficient contact with the joint areas. To counteract this, some wave soldering machines have two waves that contact the circuit board. The first is a turbulent wave. Its turbulence gives it a solder flow in multiple directions, having the effect of displacing the trapped gases and allowing solder to come into contact with otherwise inaccessible areas. A second laminar wave of solder provides the desirable joint smoothing.

A dry nitrogen atmosphere is sometimes used in the wave soldering station, especially when no-clean or less active fluxes are used.

Computer control may be incorporated in the wave soldering line. It typically includes both process control functions and management information reporting of output and quality statistics. Process control functions cover such factors as temperature of flux, solder and cleaning agents, flow rates, solder level, liquid levels, airflow and pressure, conveyor speed and flux characteristics.

C6. ***reflow methods*** - "Reflow" refers to the melting of solder that has been pre-placed in the joint. The term originally referred to remelting solder that had been melted earlier to tin a surface. Currently, the term is used whether the surface was pretinned or not. Suitable solder and flux, normally in solder paste or as a fluxed solder preform, are placed in the location where a solder joint is to be made. Heat is applied; the solder melts and forms a joint. The approach is most common with printed circuit boards where circuit devices have been placed in dabs of solder paste.

The term reflow is also used to denote the melting of a plated solder coating to provide better wetting of the surface and an improved metallic structure of the solder.

Proper reflow almost always involves a preheating operation to release solvents from the flux, to start the activation of the flux, to improve the tackiness of the solder paste, if solder paste is involved, and to provide more gradual heating of the whole assembly to prevent thermal shock.[4] A number of different methods are available to provide the heat for reflow.

C6a. ***oven heating for reflow***[4] - The use of oven heat to melt solder paste or solder preforms, and produce permanent connections, is the most common reflow method. Batch ovens can be used, but in much electronics production of printed circuit boards, a conveyorized system is employed. In current practice, the dominant approach utilizes ovens with forced convection. Ovens using infrared radiation have become a secondary method. The atmosphere in the oven may be air or nitrogen (to limit oxidation) or a mixture of nitrogen with 12 to 15 percent hydrogen. Inclusion of the hydrogen has been shown to improve the wetting action of the solder. These special atmospheres are especially applicable when the board is assembled with "no clean" (low residue) flux.[1] The air or nitrogen is blown through electrically-heated manifolds or finned-rod heating elements and diffuser plates above and below the conveyor track and around the circuit boards on the conveyor. Such convection flow provides more uniform heating of the circuit board than is achieved in systems that rely primarily on radiation, or less-forced convection.

Typical stages of heating are as follows: 1) Preheating with gradual heat buildup to about 200 to 250°F (95 to 120°C). This avoids heat shock to the board and its assembled devices and drives volatiles from the flux in a controlled manner. 2) "Preflow", in which the next oven section is a holding zone that brings the board assembly to a uniform temperature just below the melting point of the solder. This stage activates the flux and completes the drive-off of unneeded volatile materials. 3) In a third section of the oven, the temperature is quickly brought up to a level 30 to 55°F (15 to 30°C) above the solder melting point. The time spent by the circuit board at this temperature is very short. 4) Cool-down, an immediate reduction to the solidus temperature of the solder alloy, takes place and there is then a gradual reduction of the board to room temperature. Sophisticated ovens may have as many as 10 heating or cooling zones to achieve the desired heating sequence. An objective of all forced convection ovens is to achieve a minimum "delta T", the temperature variation between the hottest and coolest points on the circuit boards. The major objective is to provide sufficient heat for solder flow without overheating temperature-sensitive elements of the board. To achieve these objectives, special time-temperature sequences are developed for each board, depending on its size, the number of devices, the size and size contrast of the devices on board, and the sensitivity of the components to excessive temperatures. The special program for each board design is often stored in a microprocessor that is part of the oven system. This allows a successful heating profile to be repeated in subsequent production lots. Control systems for some ovens sense the temperature of the boards being processed as well as the temperature of the air or gas oven atmosphere. Variables under control of the system, in addition to the temperature of each heating element, are the speed of the several convection blowers and the speed of the conveyor.

Batch forced-convection ovens are used for limited-quantity production. These ovens also may have capability of storing special heating and cooling profiles in the control system so that each board processed can have an optimum sequence.

Infrared oven systems are still used in many instances. When they are conveyorized, the conveyor carries the circuit boards past an array of infrared lamps. There are two basic approaches. The first uses middle infrared with a bandwidth of 2.5 to 5.0 microns; the other uses near-infrared with a bandwidth of 0.72 to 2.5 microns.

Systems based on middle-range infrared energy use convection as well as radiation. Ceramic elements, coated and insulated, and operating at a lower temperature than that obtained from near-infrared, emit the infrared energy. Radiation at this wavelength is diffuse and somewhat less affected than with near-infrared, by the color of the absorbing surface. The heating is penetrating and easier to make more uniform throughout the board and its components. Some ovens have several heating zones so that a desired heating profile can be utilized. Preheating, and gradual heat-up, are used in this approach with venting to allow flux volatiles to escape. The preheating zones are followed by several additional zones where full heating takes place and then, often, a cooling zone. Top and bottom radiation sources are normally used. Much middle-range equipment includes means for heating and forced circulation of the atmosphere in the oven and this heated atmosphere provides approximately half the heating effect.

The near-infrared system uses multiple nonfocused tungsten filament or quartz lamps arranged to radiate heat to the passing circuit boards, often to both the top and bottom surfaces of the board. With the near-infrared lamps, little energy is transferred to the atmosphere in the oven; the bulk of the energy is absorbed by the board and its components which can be heated quite quickly. Care must be taken to avoid having critical surfaces to be heated in the shadow of other objects on the board. Temperature control of the lamps in sophisticated infrared equipment is exercised by computer control.

The infrared systems are less costly than vapor-phase reflow and the sophisticated full-forced convection systems, and are adapted to easy and fast control, so that the heating profile can be changed as necessary and tuned to fit the particular board assembly being processed.

C6b. ***vapor-phase soldering*** - is a method used to reflow solder paste deposits or solder preforms, usually on electronic printed circuit boards. The boards, with solder paste or preforms applied at each joint, are placed in or conveyed into a chamber that contains the saturated vapor of a fluorocarbon liquid. As the vapor condenses on the board, it transfers the latent heat of vaporization to the board, heating the joints uniformly and rapidly. The solder paste melts at each joint. The advantage of the process is that it avoids overheating, because the condensation temperature of the fluorocarbon vapor is a constant, precise temperature, usually about 55°F (30°C) higher than the melting temperature of the solder paste. (Different vapors are used for different solder alloys). Thus, the process avoids damage to critical electronic components on the circuit board. Chemically-inert fluids with low solvent properties are used to avoid adverse effects on the circuit. The equipment used is similar to a vapor degreaser. The fluid is boiled in a container below the work. Vapor rises to the level of the work and condenses on the cooler circuit boards, raising their temperature to the condensation temperature of the liquid. Because heating is rapid with the process, preheating is often used before vapor-phase reflow soldering to prevent flux spattering from sudden volatilization of solvents, and to reduce thermal shock to components. Preheating and cool-down stations are provided in some vapor-phase soldering equipment to reduce the time that the workpieces are exposed to temperatures above the melting point of the solder. Vapor-phase soldering is used to reflow solder connections of surface mounted components on boards with fine pitch lead spacings. Because of the inherent temperature precision of this method, its close repeatability and the fact that the oven atmosphere is oxygen free, vapor-phase soldering is particularly useful with circuit boards having components of high value, or with particular susceptibility to degradation at high temperatures. The process can be made automatic with suitable conveyors and skilled operators are not usually required. A disadvantage of the process, however, is that many of the vapors used are based on chlorinated fluorocarbons and their use is contrary to the provisions of the Montreal protocol. This disadvantage has greatly reduced the use of the process. It is illustrated in Fig. 13C6b.

C6c. ***laser soldering*** - is a reflow method that uses laser energy to heat each solder joint, one at a time, melting the solder and making the desired electrical connection. The laser is a beam of coherent light, closely focused and directed at each joint for a precise amount of time. (See 3O and 7C5 for applications of more powerful laser energy.) A computer controls the movement of the workpiece or laser beam from joint to joint and controls the dwell-time of the beam at each joint. Several different laser systems can be used. Nd:YAG lasers have the advantage of higher thermal efficiencies because less energy is reflected. CO_2 lasers operate at a higher wavelength and have a less concentrated spot of light.

The advantage of laser soldering is that the heat is highly concentrated; each individual circuit board connection can be heated without affecting the connected components (except that ceramic components may require more care). The rapid heating and cooling of the joint metal reduces undesirable intermetallics, and provides desirable ductility and fatigue resistance. However, reflectance of the joint material reduces the heating effectiveness of the laser beam, although soldering flux can be used to reduce or prevent this effect. Additionally, laser equipment is costly and output rates with the one-by-one heating may be slower than other reflow methods, although two or three joints per second has been reported to be feasible.[6] Spattering may occur when solder paste is heated rapidly by laser. The laser beam must be enclosed for safety reasons.

There are two basic laser soldering systems: *blind laser soldering* and *intelligent laser soldering.*

Blind laser soldering is open-loop laser soldering; there is no feed back. (See section 3U and Fig. 3U-1.)

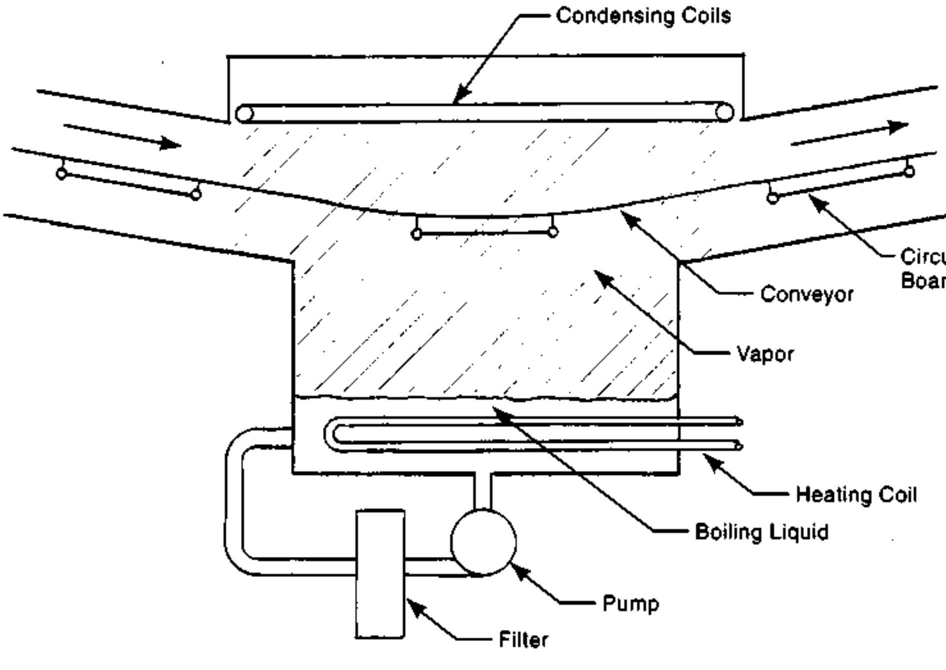

Fig. 13C6b Schematic view of a continuous processing setup for vapor-phase reflow soldering.

Next Page

The laser heating time, the diameter and power of the beam, and other aspects of the machine's settings, are programmed beforehand for each joint. Differences in joint mass, contamination, or reflectance from board to board, unless programmed beforehand, do not change the heating cycle. This approach is useful when conditions are very predictable and constant, as is the case in many mass-production situations, but is not so suitable for most printed circuit board reflow soldering.

Intelligent laser soldering is a closed-loop process. The equipment incorporates an infrared detector, mounted to be concentric with the laser beam. The detector senses when the joint metal changes from solid to liquid and the computer control then reduces the laser power for a few milliseconds of dwell and then shuts off the power, allowing the solder to cool and solidify. The combination of detector and control obviates the need for joint inspection that would be necessary with blind laser soldering. Reflow soldering of fine pitch printed circuit boards or those with tape automated bonding of components is a major application.

C7. ***hot gas soldering*** - is primarily a manual rework procedure with hand-held heat guns. Air is the most common gas used, but nitrogen or nitrogen-hydrogen mixtures can be employed when it is important to limit oxidation. Heating of the gas is usually by electrical resistance. The method is used to repair defective solder joints or replace defective components on printed circuit boards. The process can be used in other applications such as the soldering of small electronic devices, where only a small area needs to be heated. In printed circuit board operations, care must be taken not to overheat adjacent electronic components. Appropriate nozzles can limit the area heated and baffles can be used to protect critical components nearby. Gas flow rate and temperature are also controlled to avoid overheating in the vicinity of the work.

C8. ***soldering iron soldering*** - is also primarily a rework procedure. Production soldering uses more-automatic methods. Soldering irons are very common, however, for repairs, touch-up, and limited quantity or prototype work. Most irons are heated by electrical resistance. The tips or "irons" (usually copper with an iron or nickel coating) are large enough to serve as heat reservoirs and the current is always "on". Soldering irons transfer heat to the joint by conduction when the iron is brought into contact with the joint surface. Soldering guns are soldering irons with small tips that are part of a secondary transformer coil. The tips heat very rapidly as the trigger is pulled and do not heat otherwise. Another advantage of these guns is that the small tips that can be inserted easily into narrow spaces.

C9. ***using lead-free solders*** - As public and governmental awareness has grown of the potential safety hazards of lead-containing materials, there has been a movement toward the elimination of lead from soldering alloys. Prior to this movement, the most common solders for electronic products contained 37 or 40% lead. These lead solders are relatively inexpensive, reliable, and easily recycled from discarded circuit boards. However, the industry is now switching to solders with typical compositions containing chiefly tin, alloyed with 3 to 4% silver and about 1/2% copper. One commonly-used alloy is SAC305 with 96.5% tin, 3% silver and 0.5% copper, popularized by Japanese companies. These solders require peak temperatures for wave or reflow soldering of 455 to 500 °F (235 to 260°C) compared with 406 to 455°F (208 to 235°C) for tin-lead solders. The methods employed in making and assembling circuit boards with these lead-free solders are basically the same as with lead-bearing solders but require tighter process controls. The lead-free solders are more costly, primarily because of their silver content. Problems can arise with these alloys, especially in applications with severe thermal cycling. Problem areas are surface finish, solder joint integrity, thermal damage to boards, components, and connectors, and in testing, cleaning and rework.[1] Solutions to the problems involve changes to less temperature-sensitive materials and components, minor changes in tooling or methods, and more careful monitoring of process conditions.

D. Cleaning After Soldering

Cleaning printed circuit boards is carried out to remove leftover flux, dust, and various other minor soils. The purpose is to prevent electrical problems from current leakage, to prevent later corrosion, to promote adhesion of later coatings and to facilitate inspection and testing. The operation is necessary

Previous Page

except when applications allow the use of no-clean fluxes. Contamination of the circuit board with flux residue and other soils can adversely affect product reliability. As with cleaning before soldering, two basic methods currently predominate: solvent cleaning and water washing.

D1. ***solvent cleaning*** - with vapor degreasers has been the most common solvent cleaning method but is now being limited by health concerns and regulations attendant on the use of non-flammable solvents. Both batch and continuous systems are used, depending chiefly on the quantity of boards to be processed. Cold dipping and brushing are also used, but to a lesser degree. Vapor degreasing is described in Chapter 8, section A2a3. The process has one powerful advantage in that the use of vapor, from boiling the solvent, ensures that the solvent making contact with the solder board is always clean. Dirt remains in the sump of the degreaser.

Thorough batch vapor degreasing of printed circuit boards has the following steps:[6] 1) The board is placed in the vapor zone of the degreaser, above the sump where the solvent boils. The board must be cooler than the vapor, which then condenses on it, flushing dirt from the board. The dirty solvent drips back to the sump. The board should be as cool as possible, because a greater temperature differential with the vapor increases the amount of condensation and flushing that will take place. The temperature of the board gradually rises to be the same as that of the vapor and condensation ceases. 2) The board is then immersed in an auxiliary tank containing cool solvent produced when vapors make contact with the cooling coils of the degreaser. This liquid may have a slight amount of dirt from the board condensate, but not enough to be harmful, considering the subsequent operations. The immersion further flushes the board and cools it. Ultrasonic agitation may be applied to the solvent in this auxiliary tank to aid in loosening soils on the circuit board. 3) The board is again suspended in the vapor until condensation stops. 4) The board is sprayed with clean, cool, distilled solvent from another auxiliary tank. This provides further flushing of the board and cools it again. 5) The board is once again suspended in the vapor until the condensation and dripping ceases. The board is then hot, clean and dry.

Continuous or in-line vapor degreasing has the same steps as those outlined above. However, the spraying step (step 4) usually can be made more vigorous with automatic in-line equipment. There is also less vapor escape with the in-line approach which can be quite important in view of safety and environmental concerns about the escape of vapors of chlorinated and fluorinated solvents.

D2. ***water washing*** - There are a number of water-based cleaning methods that may be used individually or in sequence. Which one is used depends on the nature of the soils to be removed, the application to which the circuit board is to be put and the tolerance of that application for small amounts of contaminants, the board design, and the environment it will face. All the water-washing methods have the advantage of avoiding the environmental problems and costs involved in the use of chlorinated solvents. Waste water is economical to process and dispose of. *Water without additives* is sometimes used as a cleaning agent when the only contaminations to be removed are soluble in water. Organic fluxes and water-soluble oils are two examples. Sometimes, boards are repeatedly flushed with the same water, with the last flush of any particular board being made with the freshest water, and the first flush being made with used water. Thus, repeated flushes are made with successively cleaner, fresher water. This system leaves the board cleanest at the end of the sequence and is referred to as *countercurrent rinsing*. Fig. 13D2 illustrates countercurrent rinsing schematically. The water may be heated, since this aids in the dissolution of materials to be removed. Sometimes *water with neutralizing agents* is used. These agents react with flux acid and other acidic dirts, neutralizing them and making them easier to remove. Neutralizing agents also aid in the removal of metallic salts. *Water with surfactants* (detergents) is effective in removing non-polar contaminants, including oils, waxes, rosins and grease. *Water with saponifiers* (alkaline materials that react with rosin and oils to produce a soap-like material that is washable) are also effective in removing rosin and non-polar contaminants. Sometime a foam suppressor is added to the solution. Water rinses, often those that are multi-stage and countercurrent, follow cleaning steps that use additives with the water.

The water and water-augmented liquid used in these approaches is sprayed, flushed, and agitated, usually at a temperature in the range 120 to 180°F (49 to 82°C)[4]. Pressure spraying can loosen soils that

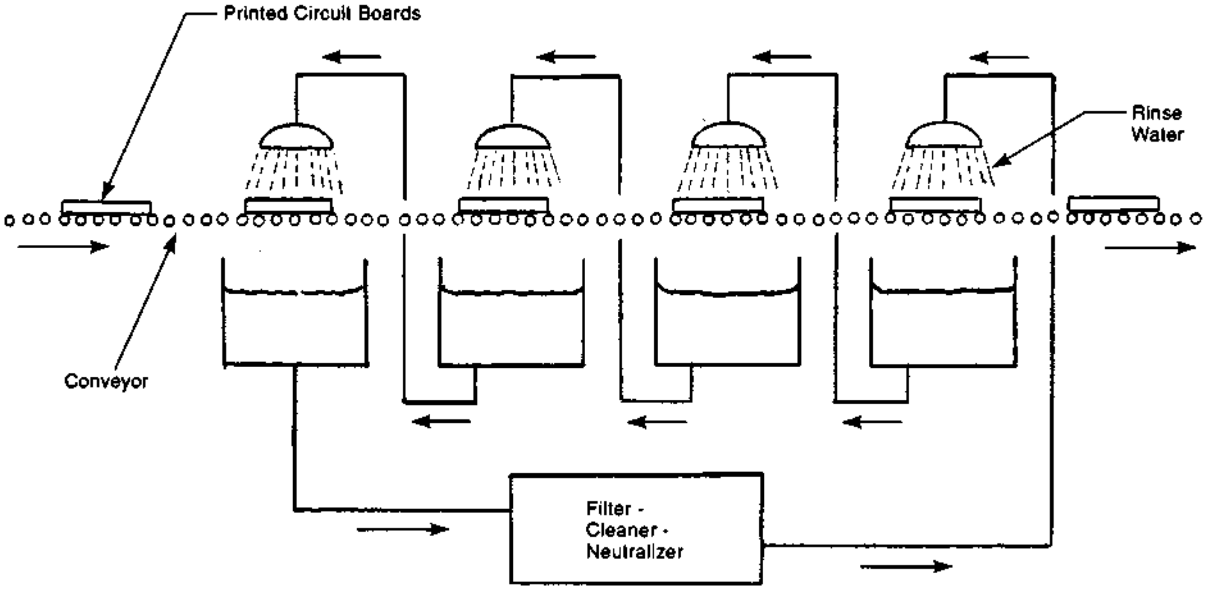

Fig. 13D2 Countercurrent rinsing shown schematically. Circuit boards on the conveyor are subjected to four rinses. The first rinse, with the board at its dirtiest, is with water that has been through three rinse cycles. The second rinse is with water that has been through two rinse cycles. The last rinse, with the board at its cleanest, is with the cleanest rinse water.

are in protected spaces. Spraying at an angle of 45 to 60 degrees has been found to be more effective than vertical spraying. Ultrasonic cavitation (See 8A2b.) can be utilized when the board is immersed, to help loosen adhering soils (though ultrasonics are used less with fine pitch assemblies where there is concern that the cavitation could damage fine-wire leads). Water washing can be a batch or continuous process, depending on the production volume. Batch washers resemble kitchen dishwashers in their arrangement and operation.[2] For higher-level production, these operations can be performed on a conveyorized, continuous basis. Air knives are often used to remove water from the boards after the washing cycle and sometimes also as an in-process step to more thoroughly remove soils from the board when the wash water contains soils. Radiant heat in a final station may be used to enhance the drying of the rinse water. A simple water-washing operation sequence is shown schematically in Fig. 13D2-1.

D3. ***semi-aqueous cleaning*** - uses solvents that do not have the disadvantage of a significant ozone-depletion property, or other serious environmental drawbacks. However, they are flammable. The most common solvents used are terpene (commonly extracted from orange peel) or an alcohol. Terpene has a flash point of 160°F (70°C). Explosion-proof equipment with fire prevention properties is used. The semi-aqueous cleaning process usually has two stages. The first stage involves washing the workpiece with the organic solvent (terpene or alcohol), to remove soils that are solvent-soluble, including rosin flux and non-polar materials. An inert atmosphere may be used during this step for fire prevention. The second stage is a water wash that removes traces of the solvent. A surfactant is added to the water. This stage also removes any water-soluble soils that were not removed by the organic solvent. A nitrogen knife, like an air knife, may be used after the solvent wash, and an air knife after the water wash. If a nitrogen atmosphere is not used in the solvent wash stage, the flushing with the solvent is done by immersion or another method that avoids creating a solvent mist that, in air, could be explosive. Terpene drained from the solvent-wash stage and that recovered from the wash water is treated and reused. The solvent is separated from the water by differences in specific gravity. The cleaning system may also have a final water rinsing stage followed by a drying stage. Fig. 13D3 schematically illustrates a semiaqueous cleaning system for circuit boards.

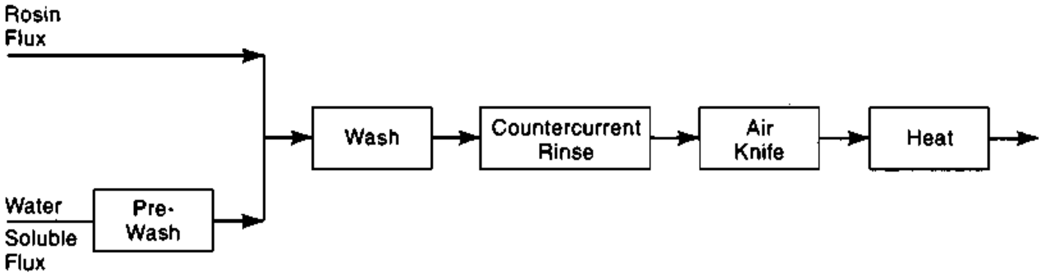

Fig. 13D2-1 Typical water washing operation sequences for circuit boards after soldering: Boards with water soluble fluxes are given a pre-wash which may be with a neutralized water or the least fresh water from the first countercurrent rinse station. The wash water may contain surfactants and/or saponifiers. Rinsing is often done in several stages with a countercurrent sequence. The air knife removes rinse water retained on the boards and the last station provides heating to dry the boards. Any or all of the wash or rinse stations may use heated water.

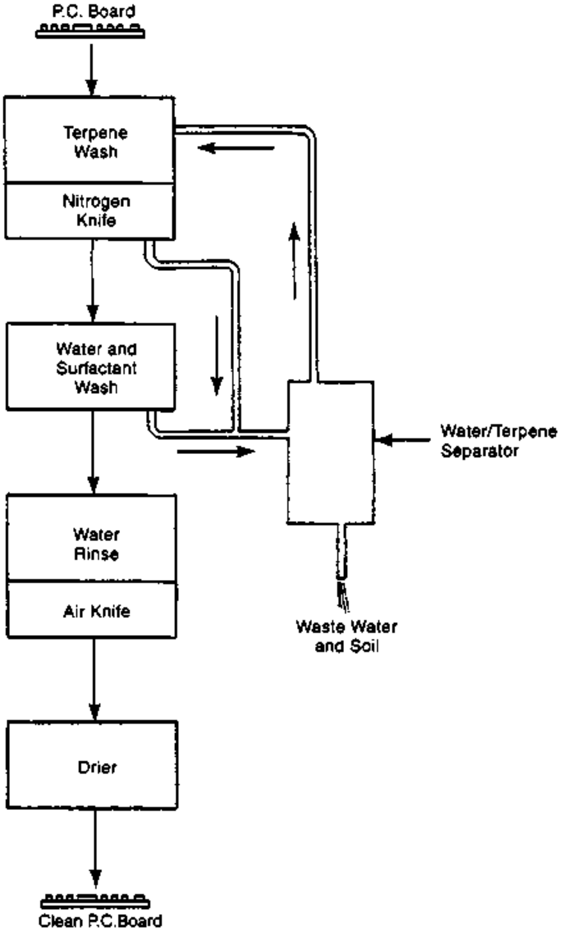

Fig. 13D3 Semi-aqueous cleaning of flux from printed circuit boards using terpene solvent.

E. Making Solder Paste

Solder paste is a homogeneous, stable mixture of flux, pre-alloyed solder powder and other ingredients (thickeners, tackifiers, plasticizers, thinners) into a single material. Solder paste is used extensively in the manufacture of printed circuit boards that include surface- mounted devices. Metal content for electronics applications is typically in the vicinity of 85 to 90 percent metal content, by weight. Solder paste is tacky enough to hold electronic devices in place until the solder is melted ("reflowed"). The paste can be deposited before devices are assembled to the board, to control the position of the devices and the size and shape of the solder fillet on each joint. Formulations with various properties are available. The necessary ingredients are mixed on a batch basis, because the usual order quantities and the many varieties produced make batch-type production most practical. A key to satisfactory solder paste is the use of solder powder with particles of the proper shapes, sizes and distribution of sizes. Several methods are in current use for producing solder powder with the necessary characteristics:

E1. ***making solder powder by gas atomization*** - is the major manufacturing method for solder powders used in solder paste. In the process, a molten solder alloy flows by gravity through a narrow orifice into an enclosed chamber. A nozzle directs a flow of nitrogen gas at this stream of molten solder, breaking it up into fine droplets of molten metal. As these droplets gradually settle to the bottom of the deep chamber, the solder cools and solidifies, changing the droplets to mostly spherical particles of solid solder. Fig. 13E1 illustrates the process. The size of the nozzle orifice, its angle and placement, the gas temperature and velocity, and the flow rate of the solder alloy into the chamber, all affect the size and shape of the particles or powder.[4] The chamber is filled with nitrogen to minimize the formation of surface oxides on the solder particles.

E2. ***spinning disk powder making*** - In this method, molten solder flowing through an orifice onto a spinning disk or cup, is flung outward by cylindrical force, to form fine droplets. These gradually settle to the bottom of the container in which

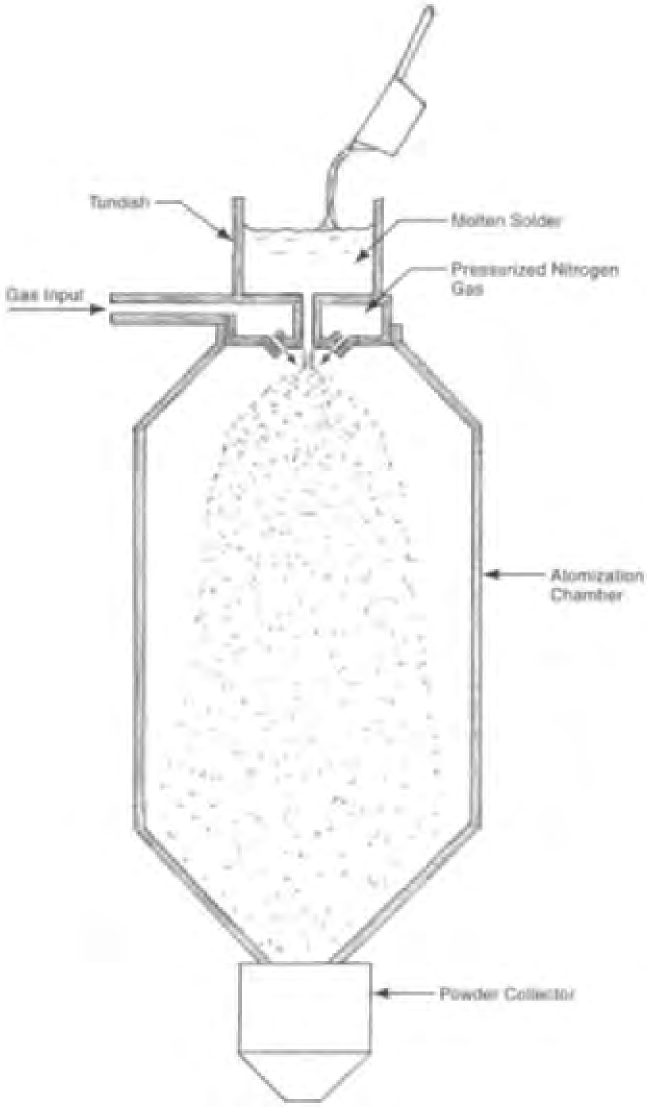

Fig. 13E1 Gas atomization of molten solder in the production of solder powder to make solder paste. For high production installations, the equipment may extend several stories in height. A blast of nitrogen gas against a thin stream of molten solder breaks it up into small droplets that form into spherical shapes and solidify as they fall to the bottom of the chamber.

the operation takes place, cooling and solidifying as they fall. They are collected as they reach the bottom of the container. However, the larger particles, having more mass per unit of surface area, tend to travel farther before they settle to the bottom of the chamber. Therefore, there is a certain amount of sorting that accompanies the process. The speed, diameter, and shape of the disk or cup, as well as the temperature and flow rate of the solder, and the temperature of the chamber, all affect the size and shape of the resulting solder particles.[4] The atmosphere in the chamber is inert, usually of nitrogen, to minimize oxides that form on the surface of the particles during the operation. The chamber is deep enough to ensure that the solder particles have fully solidified before they reach the bottom. Fig. 13E2 illustrates the spinning disk method.

E3. ***ultrasonic method of powder making*** - In this method, the molten solder is directed to flow against an ultrasonic horn, a metal device vibrating at a frequency above that of audible sound. As the horn vibrates, it throws off the solder alloy in fine droplets. These gradually settle to the bottom of the chamber in which the operation takes place, cooling as they settle, and solidifying into more or less spherical particles. The rate of flow with this method is somewhat less than with a spinning disk or with gas atomization, but multiple ultrasonic devices can be used. The powder produced tends to have a narrow range of sizes. As with the other methods described above, the atmosphere in the chamber is inert and the chamber is deep enough to ensure that particles settling to the bottom have fully solidified.

E4. ***screen classification of powder*** - With a vertical gas atomization chamber, the powder settles to the bottom of the chamber. It consists of solid particles of a wide range of sizes. Most particles are quite spherical, but when particles

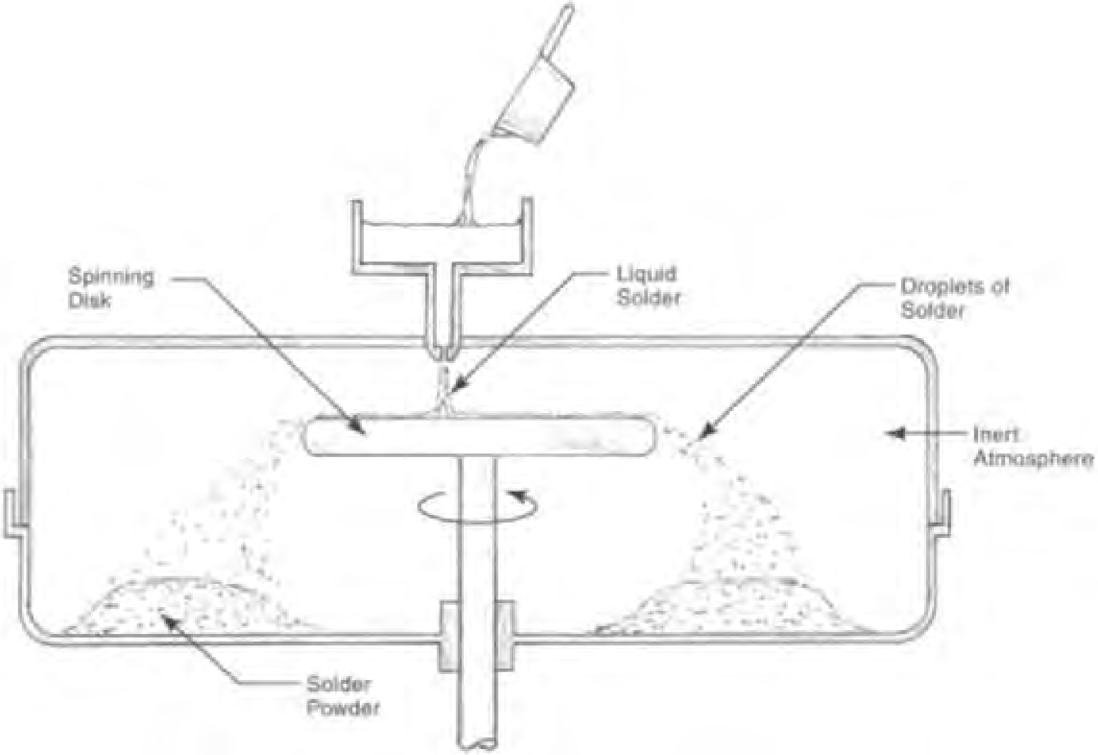

Fig. 13E2 Spinning disk atomization of solder to make powder for solder paste.

collide before solidification, irregular shapes can result. The usual practice is to have an opening at the bottom of the collection chamber through which the powder flows into a series of classification screens. Each of these screens passes particles smaller than the screen mesh openings and retains those particles that are larger than the screen mesh openings. Screens are agitated to provide repeated opportunities for each particle to pass through. Each successive screen has a finer mesh than the one above it. Material at each screen that does not pass through, migrates to one end of the screen and is drawn off into separate containers. Thus, the manufacturer is able to have a stock of powder in groups, with each group having a narrow range of particle sizes. When the solder paste is made, several size ranges of powder may be blended to provide the desired properties to the paste. Screen sizes are designated by the number of openings per inch.

E5. ***air classification of powder*** - is less precise as a classification method for particles above 35 μm but is very discriminating for particles less than 20 μm. In one method, powder of mixed particle sizes is blown into the air in a horizontal direction in a wide chamber. The larger particles have a greater ratio of mass to surface area.and thereby have more resistance to the accelerating force of the air jet. Hence, they exit the blower area at a slower speed. These larger particles fall sooner to the bottom of the chamber. The smaller particles have a lesser ratio of mass to surface area, are accelerated more, and are more easily carried by the air flow. Hence they fall to the bottom of the chamber later, after they have traveled a greater distance. In-between sizes, fall in between these locations, approximately in keeping with their particle size. Therefore, there is a graduation of particle sizes in the pile of powder at the bottom of the chamber, with the larger particles closer to the blower and the finer particles farther from it. The graduation of size from large to fine, however, is far from uniform. The operation, therefore, is normally repeated several times, starting with powder mostly within the size range wanted. After each air classification cycle, some out-of-range particles end up out of the target area, and the powder in the target area more closely conforms to the size limits wanted. However, such increased handling results in surface and shape changes to the particles and impairs the performance of solder powder when it is made into paste.

E6. ***inspection of powder*** - The simplest method for checking solder powders used in solder paste is to spread a thin layer of the powder on a glass slide and then examine this layer with a microscope. With this approach, the size distribution of the particles and their shape can be monitored in a qualitative way.

To gain a quantitative breakdown of the portion of the particles in various size ranges, the standard approach is to run a sample from the lot into a stack of small screens with progressively smaller screen openings from top to bottom. With the largest screen opening on the top, the particles larger than the opening are trapped on the screen and smaller particles fall through it to the next screen. The same thing happens at the next screen, which has slightly smaller screen openings. The largest of the particles are trapped; the balance pass through the screen. This process can be repeated with as many different size screens as desired, all placed in one vertical stack. The amount of powder left on each screen indicates the portion of the lot that is in that particular size range.

E7. ***mixing solder paste*** - is a batch operation. Solder powder, flux, plasticizers, tackifiers, thickeners, or thinners, are blended in mixers designed for the high density (because of tin and lead content) and high viscosity of the paste. Some of the mixers described in section 11G5 for stiff, viscous materials can be used for solder paste. Fig. 13E7 illustrates a machine particularly suitable for mixing solder paste. Machines which pass the paste between parallel rollers may also be employed as part of the mixing operational sequence.

E8. ***inspection of paste*** - A number of tests can be made on the solder paste to verify its properties: The ability of the paste to be dispensed - its *rheology* - is controlled most commonly by measuring the *viscosity* for which several viscosity-measuring instruments are available. The most prominent variety uses a rotatable spindle into which a small diameter rod with a cross piece ("T-bar") is inserted. The T-bar is lowered into a container of just-remixed solder paste that is at a specified and

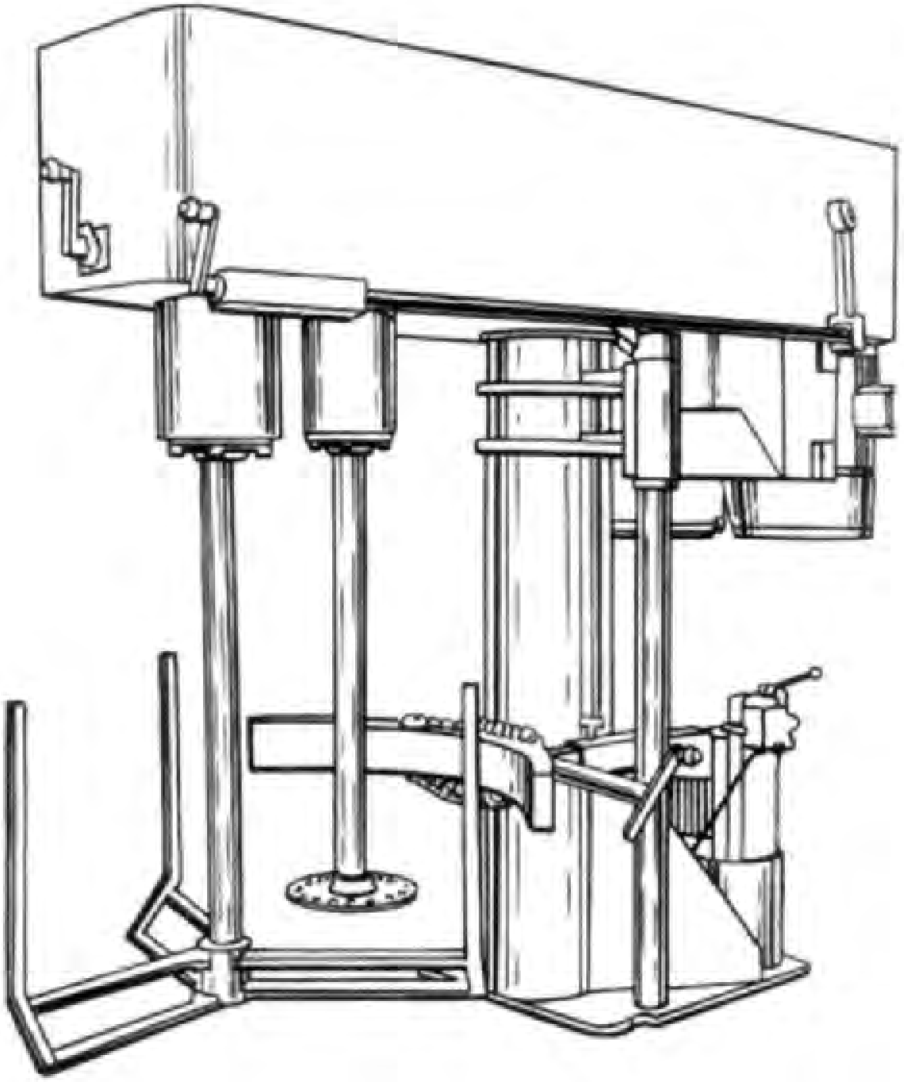

Fig. 13E7 A dual shaft mixer designed for solder paste. One shaft rotates at high speed and disperses the ingredients; the other shaft rotates at low speed and moves and blends the mixture. (*Courtesy Myers Engineering, Inc.*)

uniform temperature. The T-bar follows a helical path so that the bar is always meeting resistance from the paste as the bar rotates. The instrument measures the resistance to the rotation and translates this into a digital viscosity reading.

The *metal content* of the paste is normally checked by weighing a sample of paste, heating it to melt and coalesce the solder into one wafer, washing away the flux, and weighing the resultant metal wafer. The ratio of the two weights indicates the percentage of metal.

Flux conformance to specifications is determined by immersing the paste in a suitable solvent, filtering out the metal powder, evaporating the solvent and performing various analytical tests on the residue.

Fineness of grind of the metal particles in the paste is measured with a gauge based on those in use in the paint industry to measure paint pigments. A sample of solder paste is placed on the gauge, which is a hardened steel block having two tapered grooves in the surface. The grooves range in depth at the deep end of about 185 microns (0.007 in) to zero at the other end. The paste is placed at the deep end of the grooves and a scraping blade draws it along the length of the channel so that it remains on the gauge only in the grooves. The depth of the grooves at the point where the line of paste in the grooves ends indicates the size of the finest metal particles in the paste.

Tackiness testing - verifies that the paste has the necessary tackiness to hold surface mounted devices placed on a circuit board until solder reflow takes place. A motorized commercial testing device is used. A sample of paste is placed on the surface of a glass slide which is then stored for a length of time equivalent to that involved in production conditions. The slide is then placed on the work surface of the testing device. A probe in the device descends into the paste at a controlled rate with a specified amount of force. The probe is then withdrawn and the pulling force needed to withdraw it is measured. The magnitude of this force gives a quantitative indication of the holding power of the paste for mounted devices. Another device, sometimes used, measures the shear resistance of the paste, and therefore its resistance to the movement of devices on the board before solder reflow.

Slump tests - measure the increase in area from gravitational forces of a deposit of solder paste after the solder has been applied to a surface. Standardized test patterns of paste are applied to a surface, by screening or stenciling, and their dimensions are then observed and, if desired, measured for a change in spread. Excessive slump causes problems in holding the mounted components and can also predict solder ball and other problems in reflow soldering.

Performance tests[3] - Several tests can be used to verify that the solder paste performs satisfactorily when used on the components to be soldered: 1) *compatibility tests* verify that the solder paste is suitable for the joint surface materials under the expected production conditions. A small amount of paste (50% or less of the expected production amount) is placed on the joint surface, which is then heated to reflow the solder. The solidified spot of solder is then inspected. If good wetting is evident, the materials are compatible. 2) *solder ball test.* A small spot of solder paste is screened onto a ceramic test surface. The ceramic is heated on a hot plate sufficiently to reflow the solder. The spot of solder is then examined. If the solder forms one large spot, it is ideal. If there are more than three separate spots (solder balls), the paste is not acceptable. The flux area surrounding the solder spots should also be examined. Black particles in the flux indicate unreduced fine solder powder and the paste is not suitable for critical applications.

F. Ball Grid Arrays

Ball grid arrays utilize spheres of solder to provide the necessary material to electrically connect large integrated circuits (ICs) to printed circuit boards. These ICs are enclosed in packages that have solder pads on the underside. Connections cover the entire underside of the package, allowing space for many connections and insuring short paths for connections within the package. The spheres range from about 0.008 to 0.035 in (0.20 to 0.89 mm) in diameter and are held to close tolerances for diameter, sphericity, and surface smoothness. The spheres are placed in position by accurately applying a tacky flux to each contact pad, then causing the solder spheres to adhere to the pads (one to each pad), by vibrating them in bulk against the package. (The package is inverted for this operation.) A machine-vision device verifies from the reflectivity of the sphere's surface that there is a sphere in each position where it is needed. The tacky solder flux holds the spheres in position until the IC is heated to reflow the spheres enough to wet the pads and leave a bump of solder at each pad. The package then can be positioned on a printed circuit board that has an array of connection pads corresponding to those on the IC package. When the board is reflowed, the solder bumps complete the connections from the IC to the board. Fig. 13B2-1 shows a chip package connected to the circuit board by this method.

G. Fluxes for Electronics

Fluxes perform the same functions with respect to the joint surfaces of printed circuit boards as they do when used for mechanical and other soldering and as noted in 7A3. Rosin fluxes have long been common for electrical uses but now are employed less often as the major flux element on printed circuit boards. The availability of other suitable no-clean fluxes, testing difficulties when rosin-based, no-clean fluxes and automatic test probe equipment are used, and workers' allergic sensitivity to rosin, have all led to a reduction of rosin usage. No-clean fluxes have become dominant because of environmental factors and disposal costs related to both solvent and water-based cleaning effluents, the high density of SMT-type boards that are more difficult to clean, and the availability of effective no-clean fluxes. These do not have to be removed after the soldering operation. They typically are free of ionic materials though they contain organic acid activators (which are solids), a solvent (either water or isopropyl alcohol), viscosity modifiers (eg., methyl cellulose), surfactants, and other additives. No-clean fluxes are mixed with the same standard apparatus as are used for conventional fluxes. No cleaning or even rinsing of circuit boards is required when no-clean fluxes are properly specified.

H. Tinning

Leads, contacts, traces, pads, and other solder joint areas are coated - tinned - with a solder alloy prior to the soldering operation in order to facilitate final soldering, lessen the need for strong fluxes that may attack the circuit board, and provide longer storage life. Tinned surfaces have superior storage life and solderability than electroplated coatings. Tinning involves the following steps which may be manual or automatic:[3] 1) surfaces to be tinned are degreased, 2) If necessary, surfaces are microetched with acid, 3) flux is applied, 4) the component is preheated, 5) the surface is dipped or otherwise brought into contact with molten solder, 6) The surface is held in contact with the molten solder until full wetting takes place.7) The workpiece is withdrawn from the solder, 8) cooling takes place, 9) flux residue is cleaned from the tinned surface and adjacent surfaces as necessary. 10) The tinned surfaces are inspected. Tinning by dipping is an economical method for precoating surfaces with solder, but the amount of solder in the coating is subject to variations.

I. Quality Control and Inspection Operations

I1. ***visual inspection of joints*** - is a manual inspection for the following characteristics: 1) degree of wetting of the surfaces to be joined. 2) contours of the joint fillet (indicates the volume of solder in the joint), 3) evidence, if any, of thermal damage to the surrounding area or components, 4) cleanliness of the areas around the solder joint and, 5) consideration of design requirements and special conditions affecting the joint, if any.[2] Visual inspection is an effective method for detecting faults with solder joints. Low-power magnification is sometimes used to aid the operation, especially with fine-pitch assemblies.*[1]

I2. ***incoming inspection*** (of materials and boards before soldering connections) - The following characteristics are checked in incoming components and bare circuit boards: 1) solderability, tested by a performance test or conformance to materials and finish specifications, 2) finish of component and board terminal surfaces to resist tarnish, 3) confirmation that components will be able to withstand the heat of soldering, 4) resistance of the boards and components to the cleaning materials to be used, 5) adequacy of packaging, 6) quality of plating of conductive and terminal surfaces, 7) whether the condition of board coatings is proper, 8) correctness of dimensions of boards, traces, holes, leads, pads, etc. 9) cleanliness of terminal surfaces.

Soldering fluxes are checked for specific gravity or density, color and clarity, ionic content and for the specified chemical analysis.

I3. ***solderability testing*** - is performed by dip soldering the joint area, after proper fluxing, of the component to be tested. This step is followed by a careful visual inspection of the joint area to verify that it has been properly wetted. Sometimes, it is desirable to perform such a test with a weaker flux than will be used in production so that, if the condition of the component is marginal, the problem will be detected. Instruments are available that facilitate the testing operation. One such instrument, called a wetting balance, measures the

---

* Many inspection details are covered in the IPC 610-C standard. (IPC, Northbrook, IL, www.IPC.org.)

flotation of a sample joint immersed in molten solder. As wetting of the joint proceeds, its flotation decreases. Measurement of this effect over a time span gives worthwhile data on the solderability of the surface tested.

J. Repair and Touch-up

Soldering operations involving circuit boards do not have a 100% yield, so there is always some need to repair or touch-up solder joints after the main soldering operation. The task may be as simple as reheating a poor solder joint, or may involve the removal and replacement of a defective device on the circuit board. Repair and touch-up is normally performed manually, with electric soldering irons or soldering guns (See C8.), hot gas guns (C7), cored wire solder or solder paste. Cleaning of the joint area may be required before the operation and is also necessary after the operation. Flux is usually applied with a small brush. Care must be taken so that neither the components nor the board are damaged from excessive heating. Heat sinks may be put in place temporarily, adjacent to heat-sensitive components. Sometimes, excess solder must be removed and this can be done with hollow-tipped irons using suction or braided and fluxed copper wicks that draw the excess solder by capillary action.

The preferred method for cleaning the repaired area is by application of an uncontaminated cleaning fluid, followed by manual brushing of the soldered joint, and suction of the contaminated liquid into another container. Typically, this three step sequence will be repeated several times until no flux residue remains in the area around the joint. Apparatus for performing this cleaning sequence is commercially available. However, purely manual cleaning methods with solvents, rags, etc. may be used.

K. Integrated Circuits (ICs) (Microcircuits or Chips)

Integrated circuits are electronic circuits in micro- miniature size, existing on a single piece of silicon, germanium, gallium arsenide, or inert material (glass or ceramic) containing up to tens of millions of transistors and other devices (diodes, resistors, capacitors). These devices are formed in the semiconductor substrate, or as part of film layers added to it. Twenty or more layers of circuitry may be involved and the devices are all permanently interconnected. Circuit elements and devices on each chip are extremely small and wiring paths are as narrow as 5 millionths of an inch (0.13 microns), or less. (Process and design improvements are continually being made. The Semiconductor Industry Association has projected circuit dimensions of 0.05 microns, 50 nanometers, or 2 millionths of an inch by 2012.)[12] ICs are produced in mass-production quantities with extensive, highly sophisticated, extremely precise and extremely clean manufacturing processes, often involving 600 or more steps before each chip is completed. Chips vary in size but a common surface area is 0.24 sq. in (1.5 sq cm).

Integrated circuits are the brains of computers and other electronic devices including televisions, radios, stereo equipment, cellular and regular phones, instruments, control devices, military navigation equipment and firearms, aircraft, spacecraft, missiles, medical devices, digital watches, automotive diagnostic devices, traffic control, environmental monitoring, industrial process controls, video games and appliance controls.

The integrated circuit manufacturing process must deal with circuit features that have the very smallest dimensions and are subject to very subtle electrical and chemical effects. In order to prevent manufacturing defects, the entire fabrication sequence must be free from contamination by extraneous particles and chemicals. Clean room conditions, with the highest order of freedom from extraneous particles, are maintained by use of fine filters for ambient air and by limiting garments and room equipment to lint-free types. Clothing must prevent the release of contaminants from workers. Contamination from solvents and other chemicals, tools, equipment and production supplies must also be carefully controlled throughout the process.

IC manufacture includes the following major stages: material preparation, single crystal making, wafer preparation, wafer fabrication (including the incorporation of circuitry), and packaging.

K1. ***material preparation - making ultra-pure silicon***[5] - Quartzite (chiefly silicon dioxide, SiO_2), coke, coal and wood chips (to supply carbon), are placed in the crucible of a submerged electric-arc furnace (See 1A2.). Silicon carbide is formed and it reacts with the silicon dioxide to form liquid metallic silicon that settles to the bottom of the crucible and carbon dioxide gas that is allowed to escape. The liquid silicon, which is about 98% pure,[5] is cooled and solidifies. It is pulverized and brought into a fluidized bed with hydrogen chloride. The two materials react, forming trichlorosilane and hydrogen. Chlorides are also formed from the impurities in the silicon. The trichlorosilane is entered into a heated chamber with a controlled hydrogen atmosphere. This reduces the trichlorosilane to 99.99999% pure silicon[1] in the form of polycrystalline rods. The reaction is:

$$2SiHCl_3\ (gas) + 2H_2\ (gas) \longrightarrow 2Si\ (solid) + 6HCl\ (gas).$$

Fig. 13K1 shows the sequence of operations used to manufacture pure silicon in wafer form, and to prepare the wafers for use in integrated circuit manufacture.

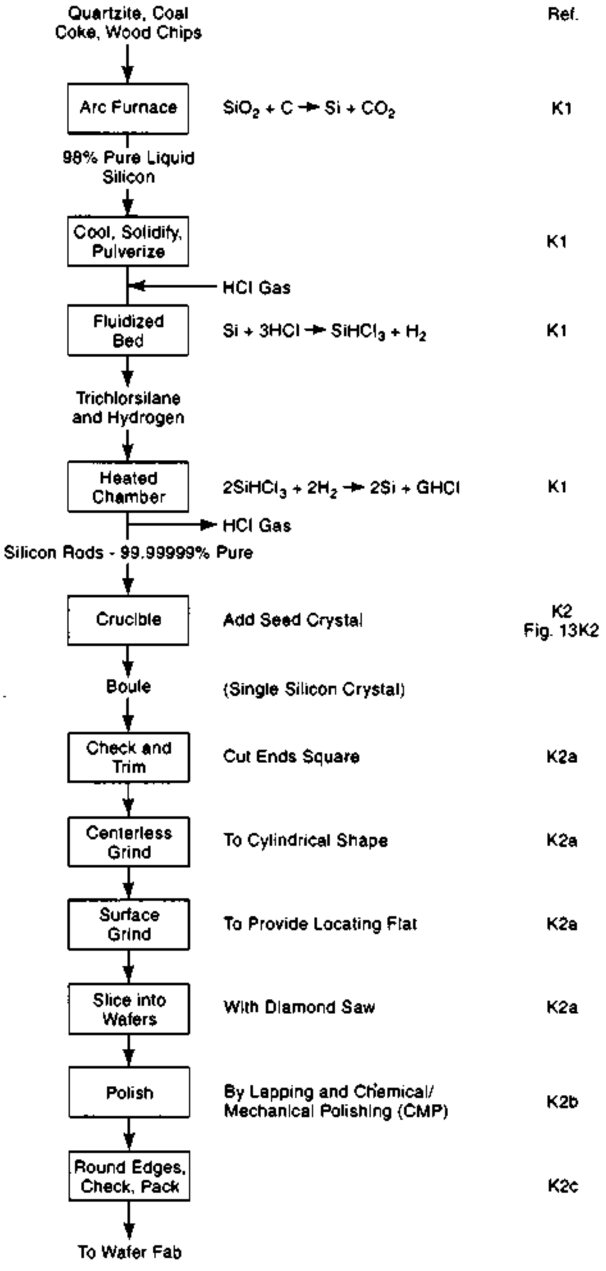

Fig. 13K1 The operation sequence for making single-crystal silicon wafers from raw materials, and preparing the wafers for the wafer fab operations.

K2. ***making a single crystal of silicon*** - Most single crystal silicon is grown by the Czochralski (CZ) method. The rods of electronic grade silicon are broken up, loaded into a large crucible and melted at a temperature of 2580°F (1415°C). Radio frequency induction or radiant heating is used. A seed crystal, attached to a vertical shaft, is lowered so that it just contacts the melt. This starts the growth of a crystal in the melt. The crystal continues to grow where it contacts the melt following the same orientation as the field. The vertical shaft and crystal rotate slowly in one direction, and the crucible in the opposite direction, to prevent any inhomogeneities in the melt from being incorporated in the crystal. When it has developed to the desired diameter, the vertical shaft is gradually drawn upward as it rotates, causing the developing crystal to assume a near-cylindrical shape. The pulling movement of the shaft is computer controlled, based primarily on the weight of the crystal as determined by a sensor. Eventually, a single large crystal, called a *boule*, is developed. It may be as large as 12 in (300 mm) in diameter and several feet in length. The operation may be performed in a vacuum or inert gas to minimize oxygen absorption by the boule. The crystal is doped during this phase. (See K3c below.) by adding already doped pieces of polysilicon to the melt. The doping lowers the resistivity of the crystal and, depending on the dopant used, leads it to become either a P-type (electron poor) or N-type (electron rich) semiconductor. Rotation of the crystal as it grows helps ensure uniform distribution of the dopant.

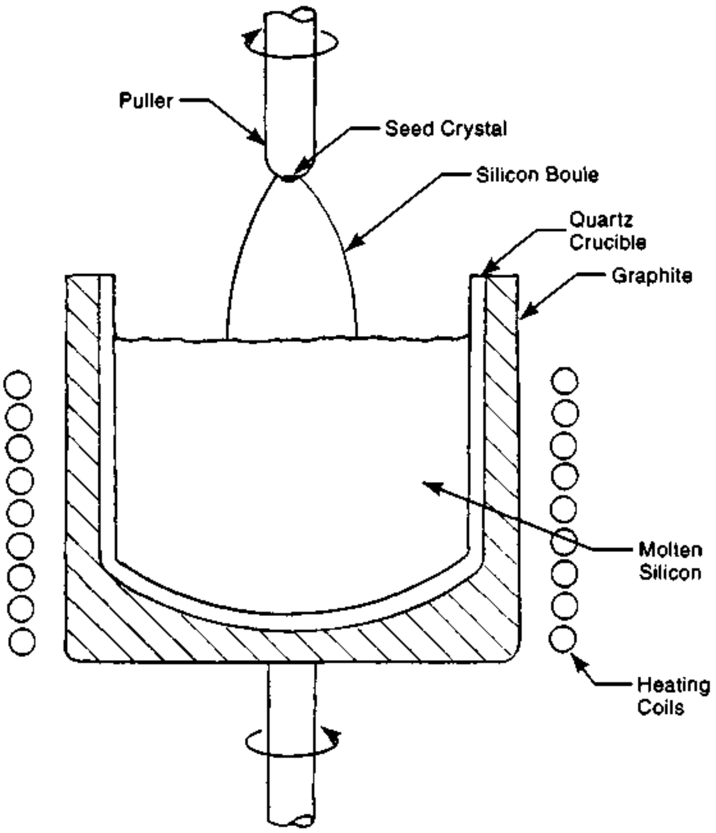

Fig. 13K2 In the Czochralski method for growing large, single-crystals of silicon, the seed crystal is immersed in molten silicon, and then gradually withdrawn as the crystal forms. The result is a large crystal that takes an essentially cylindrical shape because of the rotation and upward movement of the puller. Temperature and visual sensors are connected to a computer system that controls the operation.

Fig. 13K2 shows the crystal forming equipment schematically. When gallium arsenide crystals are made, the process is modified somewhat to prevent evaporation of the arsenic in the melt.

K2a. ***slicing into wafers*** - The boule, after it has reached the desired diameter and length, is removed from the crucible. It is checked for physical defects by etching, for proper doping by making resistivity measurements, and for crystal orientation. Defective parts of the boule, if any, are removed. The ends, of lesser diameter, are sawed off. The boule is then ground on a centerless grinder (3C1b) to produce a uniformly-cylindrical shape of the desired diameter. It is surface ground to produce one or more flat surfaces along its length. The major flat is located along one of the major crystal planes. The flat or flats facilitate location of later circuit elements. The boule is then sawed - with circular or moving-wire blades coated with diamond abrasive - into thin slices to form flat, round wafers. Circular saws are ring-shaped and do the cutting on the inside edge. This enables a thinner saw blade to be used, to reduce the kerf loss from sawing.

K2b. ***polishing the wafers*** - The surface of the wafers must be extremely flat and smooth, far flatter and smoother than the surface resulting from sawing. A two-step process is used. First, the wafers are polished with a lapping operation similar to that employed for lapped metal parts used in mechanical equipment. (See 3J2.) The lapping removes sawing irregularities. Then, a special chemical/mechanical polishing operation (CMP) takes place. The wafers are held in rotating holders, and are put in contact with a polyurethane pad rotating in the opposite direction. The polyurethane may be a solid material or a coating on felt. A slurry of glass particles and ammonium or potassium hydroxide is fed onto the pad. The hydroxide reacts with the silicon to form a thin surface layer of silicon dioxide which is removed by the buffing abrasive action of the pad and the glass particles. High spots are removed most aggressively and the result is an extremely flat surface. Careful control of all process variables and conditions is essential.[12]

K2c. ***other wafer preparation operations***[12] - The edges of the wafers are rounded to minimize the possibility of edge chipping or other damage to the wafer during further processing. Rounding is accomplished by a grinding operation, followed by chemical processing. Another operation that may take place consists of sandblasting the underside of the wafer. This is to *getter* the surface, to create mild damage to the crystal structure of the wafer and prevent ionic contamination, if it occurs, from damaging the circuitry on the top side of the wafer. Another operation, quite common for 300 mm (12 in) diameter wafers, is to polish the reverse side of the wafer to ensure the highest level of flatness.

Before being released for chip-making operations, the wafers are carefully examined with automatic inspection machines or special lights to uncover any surface defects or contamination. Before shipment to customers, they are carefully packed in clean rooms in non-static protective material.

K3. ***wafer fab*** - is the name given to the series of operations that create semiconductor devices on and in the wafer surface. The result of wafer fabrication is a flat round silicon disc, up to 12 in (300 mm) in diameter, with hundreds of individual integrated circuits (ICs) on its surface. Wafer fab for complex microprocessors may require more than 500 operations. In the current state of the art, these operations may all take place automatically with special machines and often with the aid of robots, so that human handling is not required. Four classes of operations are involved in the wafer fab process. They are: 1) *layering* - processes that add thin layers of material to the wafer surface. The layers can be insulators, conductors, or semiconductors, and are either grown by chemical reaction with the existing surface material, or are deposited as new materials. The layers are made by thermal oxidation or nitridation, chemical vapor deposition, vacuum evaporation and deposition, or sputtering. 2) *patterning* - a series of processes that removes portions of surface material so that a layer on the wafer incorporates microcircuit elements. Patterning operations, also known as lithography, photolithography, or microlithography, include mask making, resist application, exposure and developing of the resist, etching and resist removal. 3) *doping* - operations that change the electrical conductivity, usually in localized areas of the wafer surface. Thermal diffusion and ion implantation are two doping methods. 4) *heat treatments* - heating operations that make physical changes in the wafer material. There are several different heat treatment operations, one of which is referred to as annealing.

These operations are repeated many times for up to about 20 layers before the wafer is converted to a quantity of chips (integrated circuits not yet packaged). Individual steps of wafer fab are described at more length below. Fig. 13K3

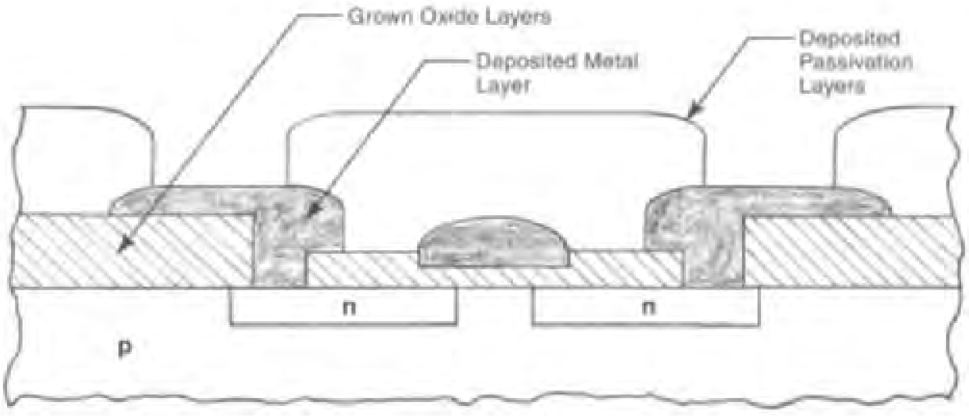

Fig. 13K3 Cross section of a MOS transistor, showing the patterns of both the grown and deposited layers.

illustrates the patterned layer construction of a typical MOS (Metal Oxide Semiconductor) transistor as it exists in an IC on the wafer. Fig. 13K3-1 outlines the operation sequence required to make such a transistor as part of the IC.

K3a. ***layering*** - There are two basically different ways of providing layers in integrated circuits. Grown layers are made by chemical reaction with the existing surface material to create a surface layer of a different compound. Oxidation and nitridation are two processes used to grow new layers by chemical reaction. Deposited layers are thin or thick films that are added to the existing surface. Deposition methods include CVD (chemical vapor deposition), vacuum deposition

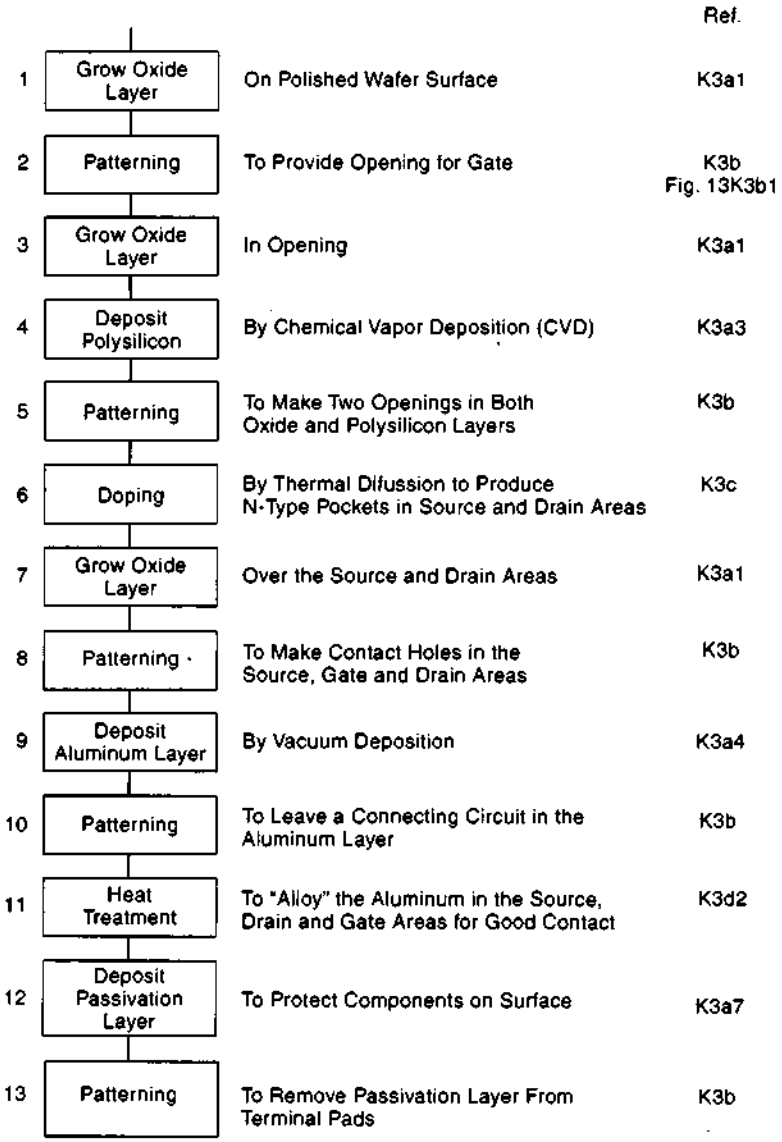

			Ref.
1	Grow Oxide Layer	On Polished Wafer Surface	K3a1
2	Patterning	To Provide Opening for Gate	K3b Fig. 13K3b1
3	Grow Oxide Layer	In Opening	K3a1
4	Deposit Polysilicon	By Chemical Vapor Deposition (CVD)	K3a3
5	Patterning	To Make Two Openings in Both Oxide and Polysilicon Layers	K3b
6	Doping	By Thermal Difussion to Produce N-Type Pockets in Source and Drain Areas	K3c
7	Grow Oxide Layer	Over the Source and Drain Areas	K3a1
8	Patterning	To Make Contact Holes in the Source, Gate and Drain Areas	K3b
9	Deposit Aluminum Layer	By Vacuum Deposition	K3a4
10	Patterning	To Leave a Connecting Circuit in the Aluminum Layer	K3b
11	Heat Treatment	To "Alloy" the Aluminum in the Source, Drain and Gate Areas for Good Contact	K3d2
12	Deposit Passivation Layer	To Protect Components on Surface	K3a7
13	Patterning	To Remove Passivation Layer From Terminal Pads	K3b

Fig. 13K3-1 The operation sequence involved in creating a simple MOS-silicon gate transistor as part of an integrated circuit. Note that the patterning operation, which is repeated five times in this sequence, requires, in itself, five or more separate operations. (*This chart based on data in Microchip Fabrication by P. Van Zant.*[12])

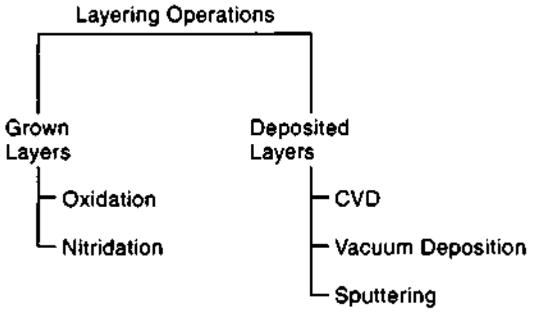

Fig. 13K3a Methods of creating layers in integrated circuits.

(vacuum evaporation and deposition) and sputtering. See Fig. 13K3a.

K3a1. ***oxidation of silicon*** - creates a grown layer of silicon dioxide. This oxide layer has many possible uses. It is a dielectric and is used to electrically separate the circuits on different layers, to provide a dielectric in circuits, and to passivate the surface of the wafer, that is, to provide a protective coating to guard semiconductor surfaces against physical damage, chemical contaminants, and dirt particles. Coating the wafers with oxide film is part of the process for producing doping masks which allow the selective changes to be made in limited areas of the silicon substrate surface. This layer is one of several kinds of film that may be produced on the wafer and is the first film. The first step is to oxidize the entire surface of the wafer, converting silicon at the surface to a silicon dioxide film. This creates a mask over the whole wafer surface. Part of the mask normally is then removed in the areas where it is not wanted by using lithography. (See K3b1 below.)

The oxidation operation is carried out by blanketing the wafer surface with a stream of pure oxygen or steam in a hot furnace. Commonly used temperatures are in the range of 1500 to 2200°F (810 to 1200°C) and a pressure of 20 atmospheres in the furnace, that is tubular with quartz walls. The operation creates a layer of silicon dioxide, (SiO_2), that can function as an effective mask for later operations. The use of steam (*wet oxidation*) produces faster results and, in practice, steam is provided by introducing pure hydrogen and oxygen to the furnace and igniting the hydrogen. This method avoids any problems of contamination that may come from the use of steam from water and minimizes the chance of liquid water getting into contact with the substrate surface, which can cause some unevenness of oxidation. The oxide surface provides protection from unwanted reactions with the silicon surface in subsequent operations. Silicon, without this protection, is very reactive and could bond to other substances and cause electrical misfunctions.

Subsequent operations to produce an oxide layer are carried out as the circuitry and semiconductor devices are fashioned on the chip. At certain points, particularly between layers of circuitry on each chip and after lithography, etching and doping and other thin film operations, a layer is required for insulation and as a mask during doping. These layers are achieved by chemical vapor deposition (CVD) of silicon dioxide or silicon nitride.

K3a2. ***nitridation*** - Some transistors utilize a thin gate oxide of 100Å or less in thickness. Silicon nitride (Si_3N_4) is preferred to silicon dioxide in these cases. Silicon nitride is grown on silicon substrates by *thermal nitridation*, which involves exposing the surface to gaseous ammonia (NH_3) at a temperature in the range of 1740 to 2190°F (950 to 1200°C).

K3a3. ***chemical vapor deposition (CVD)*** - Chemical vapor deposition is a gas-phase process discussed in Chapter 8, section F3b. Most integrated circuit films are produced by a CVD method. The material is deposited from a chemical reaction of gases, producing a vapor of molecules or atoms that form a layer on the wafer surface. There are many different variations of CVD processes. Heat is usually applied to the reaction chamber. The operation may take place at atmospheric pressure or at a reduced pressure. CVD, for IC wafers, is used for deposition of silicon dioxide, silicon nitride, epitaxial silicon and polysilicon. The CVD of wafers is preceded by a cleaning operation, sometimes including etching. The process is usually carried out in a horizontal cylindrical reactor. Heating is generally by induction but radiant heating is also used. A typical temperature is 1830°F (1000°C). Silicon tetrachloride ($SiCl_4$) or silicon hydride (silane) (SiH_4) are the gases used to provide silicon atoms. The growth rate for the silicon film is normally about one micron (0.00004 in) per minute.[11]

K3a3a. ***epitaxy*** - is the process of growing a single crystal, layer by layer, on the flat surface of another single crystal. In wafer fab, epitaxy is the growing of layers of silicon on the silicon substrate of the wafer. The method is used when the silicon to be deposited has a different impurity content than the substrate silicon. The deposited material is usually the same as the substrate material except for the presence of a different amount or type of dopant. Layers that are lightly doped can be deposited on layers of the opposite conductivity that are more heavily doped. The dopant is another semiconductor material such as gallium arsenide, cadmium telluride (CdTe), germanium, or lead telluride (PbTe). Insulators that may be deposited include sodium chloride (NaCl - rock salt) and magnesium oxide (MgO). The substrate and deposited material involved must have nearly the same atomic spacing in their crystal structure for the process to work well. Epitaxial coatings permit closer spacing of components in the IC. Several methods are available for deposition of epitaxial layers: CVD, molecular beam epitaxy (MBE), and liquid-phase epitaxy (LPE). Epitaxy is used in the manufacture of bipolar and CMOS transistors and some resistors. The epitaxial coating is deposited on either the entire wafer surface or only in selected areas in openings in the silicon dioxide or silicon nitride films.

Epitaxial coatings are most commonly deposited by chemical vapor deposition (CVD). With carefully-developed and closely-controlled process parameters, the deposited material follows the same crystal arrangements as the substrate. Silicon tetrachloride, with a small amount of HCl gas for etching the silicon substrate, is the gas most frequently used to supply the silicon. Silane and dichlorosilane (SiH_2Cl_2) are also used. Several stages of thorough gas-phase cleaning of the wafer surface before deposition are vital to the operation.

Another form of epitaxy is molecular-beam epitaxy (MBE) in which a beam of molecules and atoms is directed at the flat surface of the substrate in a chamber of low pressure. Cells containing very pure amounts of the coating material are placed in the chamber where they are subjected to an electron beam. This causes them to be heated until some of the material evaporates and travels through the cell opening to the wafer, where it is deposited in an epitaxial layer. This approach can be used to produce a layer of gallium arsenide, and multiple layers of different materials at a lower temperature than that required for CVD. However, the process is slow.

Liquid-phase epitaxy (LPE) uses a liquid solution instead of a gas or molecular stream to grow crystals on a substrate. The method involves the immersion of the substrate in a saturated solution of the coating material. Gallium arsenide, gallium aluminum arsenide, and gallium phosphide are grown with this technique.

K3a4. ***vacuum deposition*** - is much like the vacuum metalizing process described in section 8F3. The material is evaporated in a vacuum, often by electron beam, and the vapor condenses as a film on the wafer surface. The process is also referred to as *evaporation.* It is used for the deposition of thin film metallic conductors. Aluminum is the most frequently used metal. Gold can also be deposited with this method. Fixturing that moves the wafer during evaporation is commonly utilized, to ensure uniform metal deposition on the wafer. The process is used for integrated circuits having broader wiring paths. It is also used to deposit gold on the back sides of wafers to facilitate adhesion of the chips in packages.

K3a5. ***sputtering*** - Sputtering is another vacuum method and is used for metals, alloys, semiconductor materials, and dielectrics, including glass. High-melting-point metals, such as tungsten is deposited by sputtering which is also known as Physical vapor deposition (PVD). The operation is performed in a vacuum, and is described in section 8F3a and illustrated schematically in Fig. 8F3a. The deposition material is taken from a wide source and therefore covers steps in the substrate surface. Adherence of the film to the substrate is superior to that achieved with vacuum deposition.

K3a6. ***adding thick films*** - involves the printing and then firing of a coating on a substrate material. The film material may provide conductance, resistance, or a dielectric on wafer surfaces, hybrid circuits, or multichip substrate materials. The materials can be ceramic, glass, quartz, sapphire, or metal coated with porcelain enamel. Film thicknesses are typically 0.0005 to 0.0015 in (13 to 38 microns).[9] Resistors, capacitors and inductors can be formed on wafers or other substrates of dielectric materials. These components are used, along with other electronic devices, particularly integrated circuits, in hybrid microcircuits.[1] The thick films are also used in the fabrication of multichip modules, resistors, potentiometers, magnetic devices, circuit protection devices, electroluminescent devices and membrane switches. Thick films are normally in paste form and contain three basic ingredients: a functional material (resistor, conductor, dielectric), a binder (glass powder), and a vehicle (solvents, plasticizers, etc.) The paste is applied by screen or stencil printing . After printing, the paste is allowed to settle for 5 to 15 minutes at room temperature and is then oven dried at 210 to 300°F (100 to 150°C) for 10 to 15 min. Firing temperatures are typically 930 to 1850°F (500 to 1000°C).[1] Various layers are added, depending on the function involved and circuit devices needed. Hybrid circuits may have a mixture of thick and thin film layers.

Thick film capacitors[9] are made in one of two ways: The first is by printing conductive material to form the base electrode and its termination, then depositing a dielectric material and firing it, and then depositing conductive material for the other electrode and its connection. The dielectric film, commonly barium titanate or titanium dioxide in a vitreous mixture, is fired at about 1560°F (850°C). The second method is to print the metal electrodes on opposite sides of the ceramic substrate. In both methods, capacitance may be adjusted to more precise values, if needed, by laser trimming the electrode material. When trimming is required, the amount of material printed provides slightly more capacitance than needed and the trimming of appendages or small parallel trimming capacitors reduces the capacitance of the unit.

Thick film resistors[9] are made by first printing the resistor terminations on the substrate with a conductive ink (usually a metallic paste). The substrate, with terminations, is then fired at 1470 to 1700°F (800 to 930°C). Then the resistance material, also in paste form, is printed on the substrate and dried at about 300°F (150°C). If a resistor network is involved, several different resistance materials are normally used in the network. After drying, the device is fired again at about 1560°F (850°C) if made from mixtures of precious metals, metal oxides, and glass binder, or at up to 600°F (315°C) if carbon. The finished resistors may be trimmed by laser to provide more precise resistance values. When trimming is needed, the amount of resistance material printed is slightly more than needed and the trimming reduces the width of the material, increasing its resistance.

Thick film inductors[9] are made with thick films by printing a spiral pattern of conductive inks on the substrate. Because of size limitations on circuit devices, this method of inductor making is limited to circuits operating at high frequencies, 10MHz or higher.

K3a7. ***adding protective layers*** - Layers of silicon dioxide or silicon nitride are added to provide insulation between devices on the integrated surface and to provide protection to the existing layers. Protection may be needed from chemical action or handling damage. The insulating layers are grown by thermal oxidation (See K3a1.), nitridation (K3a2), or chemical vapor deposition. Adding oxide or nitride layers for protection after the chip is fabricated is called *passivation.* It provides protection for the chip during testing, packaging and use.

K3b. ***patterning*** - is the series of operations that incorporates the circuit layout from a photomask or reticle into the surfaces of the wafer. The purpose of the process is to provide the correct locations and spaces for fabricating circuit devices and the necessary wiring paths to connect them.

K3b1. ***lithography*** - is a means for etching patterns in integrated circuit surfaces corresponding to the elements of the integrated circuit. The size and location of the elements is measured in microns. Photolithography uses photographic techniques and ultraviolet light to provide such small size and precise positioning. One key element of photolithography is the use of a photoresist. Electron-beam lithography and X-ray lithography can provide even more precise positioning but have some process disadvantages. The resist film has two basic vital properties: 1) It changes its solubility (becoming either less soluble or more soluble, depending on its material) when exposed to light or other radiation and, 2) It resists the attack of an etchant that will remove substrate material. The steps of photolithography are illustrated in Fig. 13K3b1 and are as follows: 1) Preparation of the wafer substrate with an oxide layer. 2) *Resist application* - A thin film of photoresist material is applied to the substrate that is to be processed, 3) *Exposure* - Optical light, ultraviolet light, or other radiation is projected through a transparent mask plate. (The mask plate, made of glass or other transparent material, already has the circuit pattern printed on it.) Electron beam radiation produces the finest resolution, but is very slow.[11] The areas of the substrate that received the radiation are either softened (positive resist) or hardened (negative resist), depending on the material involved. The image on the substrate is reduced in size considerably from that on the mask using special optical reducing lenses. Circuit path widths of less than 100 nanometers (0.1 micron) have been achieved. The exposure machine exposes only a small portion of the wafer and then steps to the next position and exposes again. With each exposure, the mask's circuit pattern is duplicated on the wafer surface. The process is repeated until the entire wafer surface is exposed. 4) *Development* - The substrate is washed with a solvent that dissolves the softer photoresist material. (With a *positive resist*, the softer material is that which was exposed to the radiation; with a *negative resist*, it is the material that did not receive the radiation.) 5) *Etching* - An etchant is applied to the substrate. Part of the substrate is removed from those areas not protected by the photoresist; the covered areas are unaffected. 6) *Resist removal* - The resist material is removed, leaving the substrate with a surface etched with the pattern that existed on the mask plate.

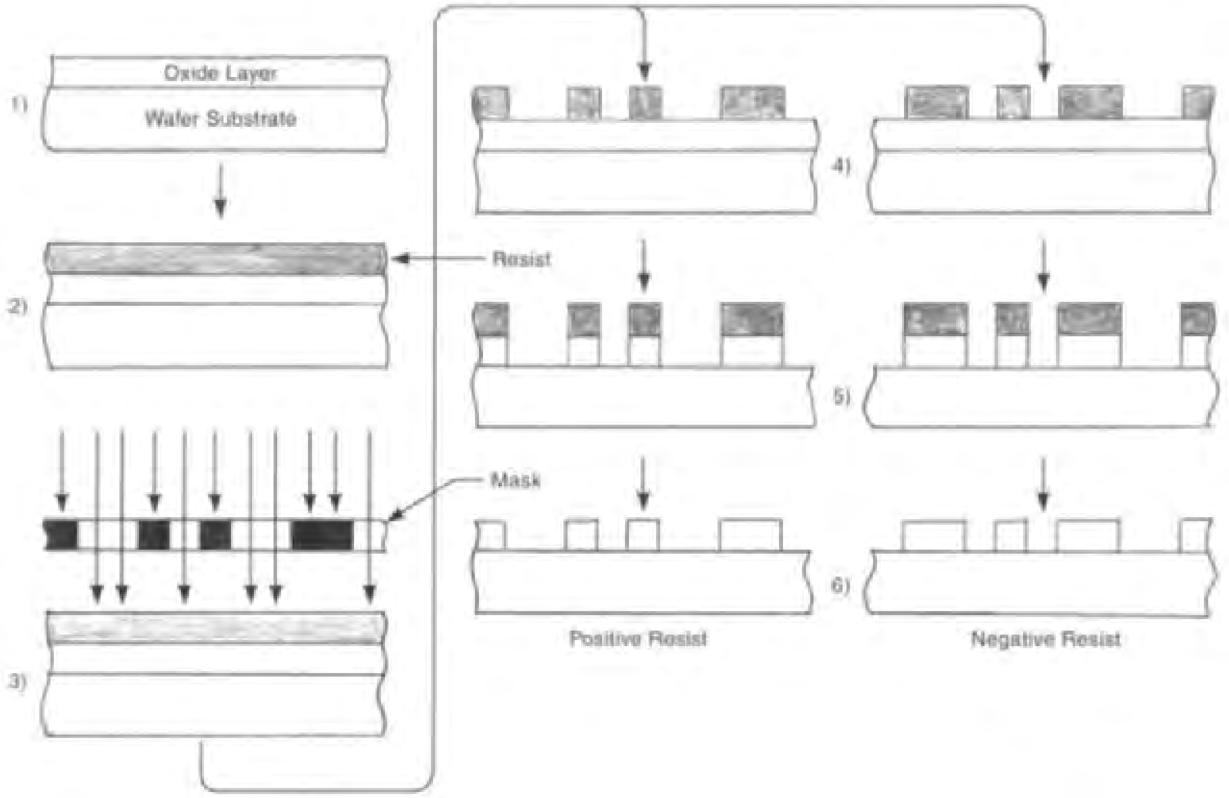

Fig. 13K3b1 The sequence of the lithography process: 1) wafer with a film layer is made ready for the operation, 2) resist is applied to the surface, 3) resist is subjected to radiation of ultraviolet light, x-rays or electron beams, through a mask, 4) the more soluble portion of the resist is removed. With a positive resist, the exposed portion becomes more soluble; with a negative resist, the exposed portion is made less soluble. 5) the layer underlying the resist is etched away, 6) the resist layer is then removed.

K3b1a. ***making masks*** - A unique photomask, which delineates the circuit layout, is made for each layer of the chip. The operation starts with a circuit design for the complete integrated circuit. The design identifies the various transistors, resistors, diodes, capacitors, and connecting wiring to be included in the layer, and the electrical specifications of all components. This circuit design is translated by the chip designer, with the aid of a computer-aided design (CAD) program, into a dimensioned layout for each layer of the chip. The next step is to make a reticle for each layer. The reticle is an enlarged master copy of the layout on a borosilicate or quartz glass panel, with the layout delineated in a layer of chromium on the panel. The pattern in the chromium is made by an operation sequence similar to that used on the chips. Resist material is applied to the chromium-coated panel. A computer- controlled laser beam or electron beam traces the circuit pattern of this design on the panel, exposing the resist. The resist is developed and unexposed portions are flushed away with a solvent. The uncovered portions of the chromium layer are then etched and removed and the photoresist is removed from the finished reticle. Fig. 13K3b1a shows the operation sequence. The reticle, a single copy of the circuit layout, then can be used with a step-and-repeat sequence to project images of the circuit on the resist-coated surface of the wafer. The alternative method is to use the reticle as a means to make a multiple image photomask that, in one operation, projects all the layout images on the wafer. To make the photomask, the reticle is brought into contact with the resist-coated blank mask in a contact printer. The blank glass and chromium mask are also in the contact printer. UV light is then used to transfer the image from the reticle to the resist on the mask. This is repeated until all necessary images on the mask have been exposed. The balance of the patterning operations are performed on the mask until it has the necessary number of layout images delineated by its chromium coating. The resist is then removed. Fig. 13K3b1a-1 illustrates how the reticle and masks are used.

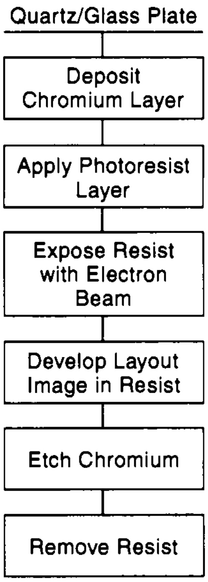

Fig. 13K3B1a The operation sequence for the preparation of a reticle.

K3b1b. ***applying resist (photoresist film)*** - Application of the photoresist involves three steps: 1) priming the wafer surface. 2) applying the resist in a uniform coating, 3) soft baking the photoresist.

Priming is carried out to ensure that the resist adheres properly to the wafer surface. The usual priming material is hexamethyldisilazane (HMDS) in xylene solvent. It is applied by a number of methods: immersion of the wafer, by applying the primer to a rapidly spinning wafer on a turntable, by vapor deposition at atmospheric pressure in a chamber, or by vapor degreasing with HMDS, or with a third vapor method. In this third method, wafers are first heated in an oven in a nitrogen atmosphere to completely dry the wafer; then, a vacuum is pulled in the oven followed by admission of HMDS vapors to the oven. The vapors coat the wafer, providing good performance as a primer for the resist coating with low usage of HMDS.

There are several variations of resist coating process, but the most common methods all use a spinning turntable. The centrifugal force generated by rapid spinning spreads the liquid polymer resist to a uniform thickness, especially near the edges of the wafers, where there otherwise would be an edge-bead buildup. An edge buildup of resist would interfere with the accuracy of the photoresist. Manual, semiautomatic, and fully automatic variations of the spinning method are in use. Some methods combine the operations of primer

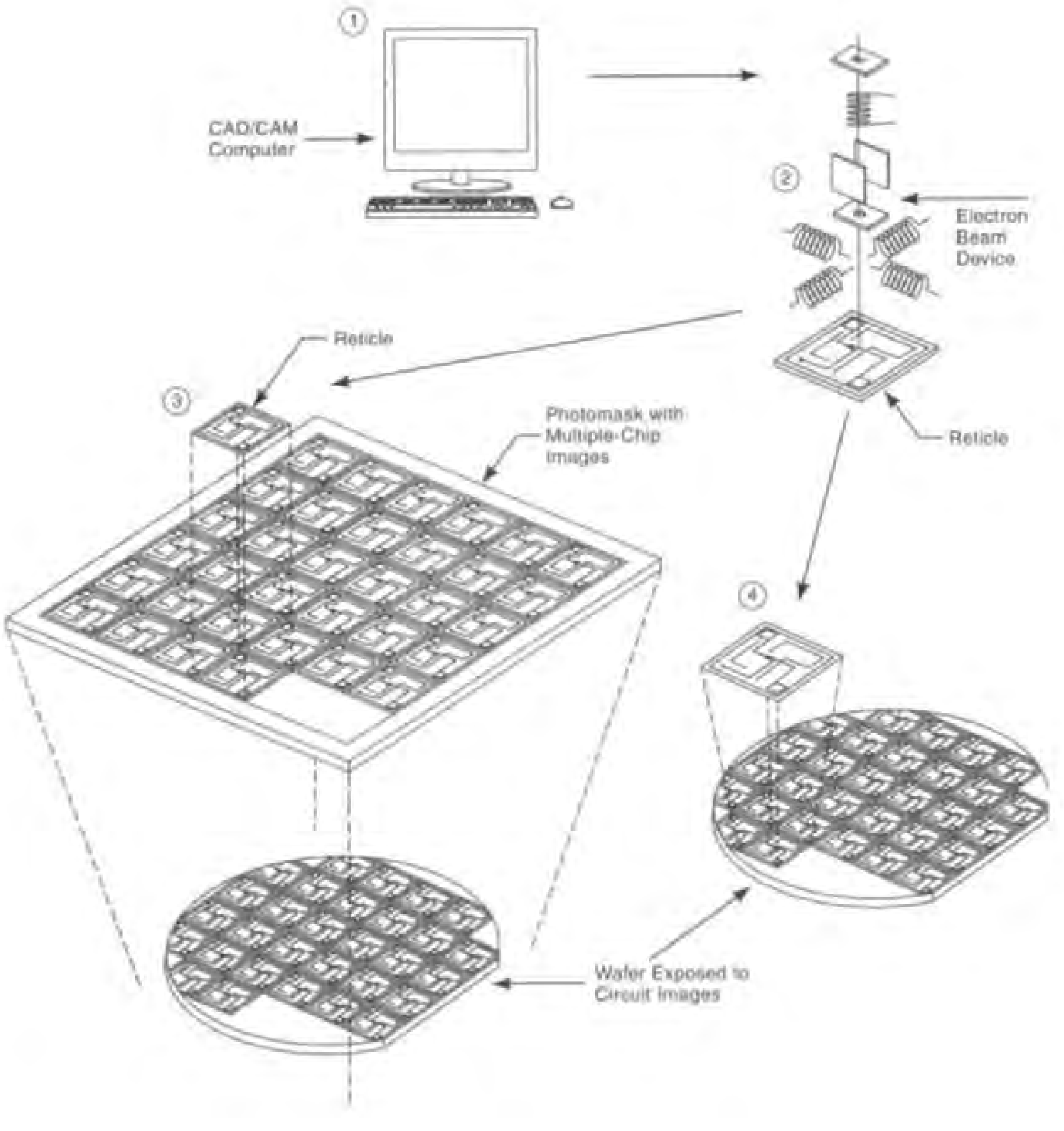

Fig. 13K3b1a-1 Fabrication and use of a reticle and a mask to expose the wafer surface with the design layout for one layer of the chip circuit. 1) The process starts with a CAD dimensioned design layout of one layer of the chip. 2) That design layout is fed to an electron beam or laser beam scanner, which exposes a resist surface on a quartz-glass reticle to the design. 3) In one method, the reticle design is transferred to a multiple-image quartz- glass mask by a series of contact printings. The mask then has multiple images of the chip circuit layout. These images are projected all at one time from the mask to the wafer to expose a resist on the wafer surface. 4) In the other method, the image on the reticle is projected directly to the wafer with a step and repeat exposure and no multiple photomask is used.

application and resist application on the same spinning chuck. The views in Fig. 13K3b1b schematically represent an automatic arrangement after each wafer is positioned on a vacuum spinning chuck where it is held during nitrogen blow off, primer dispensing and spinning, and resist dispensing and spinning, followed by automatic unloading for transfer to the baking operation.

The baking operation, called *soft bake*, has the purpose of evaporating part of the solvents in the photoresist. The provides better adhesion of the resist and better quality exposure of the resist pattern. Conduction (hot plate), convection oven, radiant oven, and microwave heating systems are all used in various soft bake systems. Some systems also use vacuum assistance to aid the evaporation.

K3b1c. ***expose and develop the resist*** - A glass mask or reticle, carrying the desired circuit pattern for each chip, is used in a precision optical device to project an image of the circuit on one small area of the wafer. In the most common method, the projection operation is repeated for each chip ("die") area on the wafer, with precise alignment, one die at a time, until all dies on the wafer surface have been exposed. (Another method, now less used, except in less densely packed chips, is to make a multiple mask that has a copy of the circuit for each die location on the

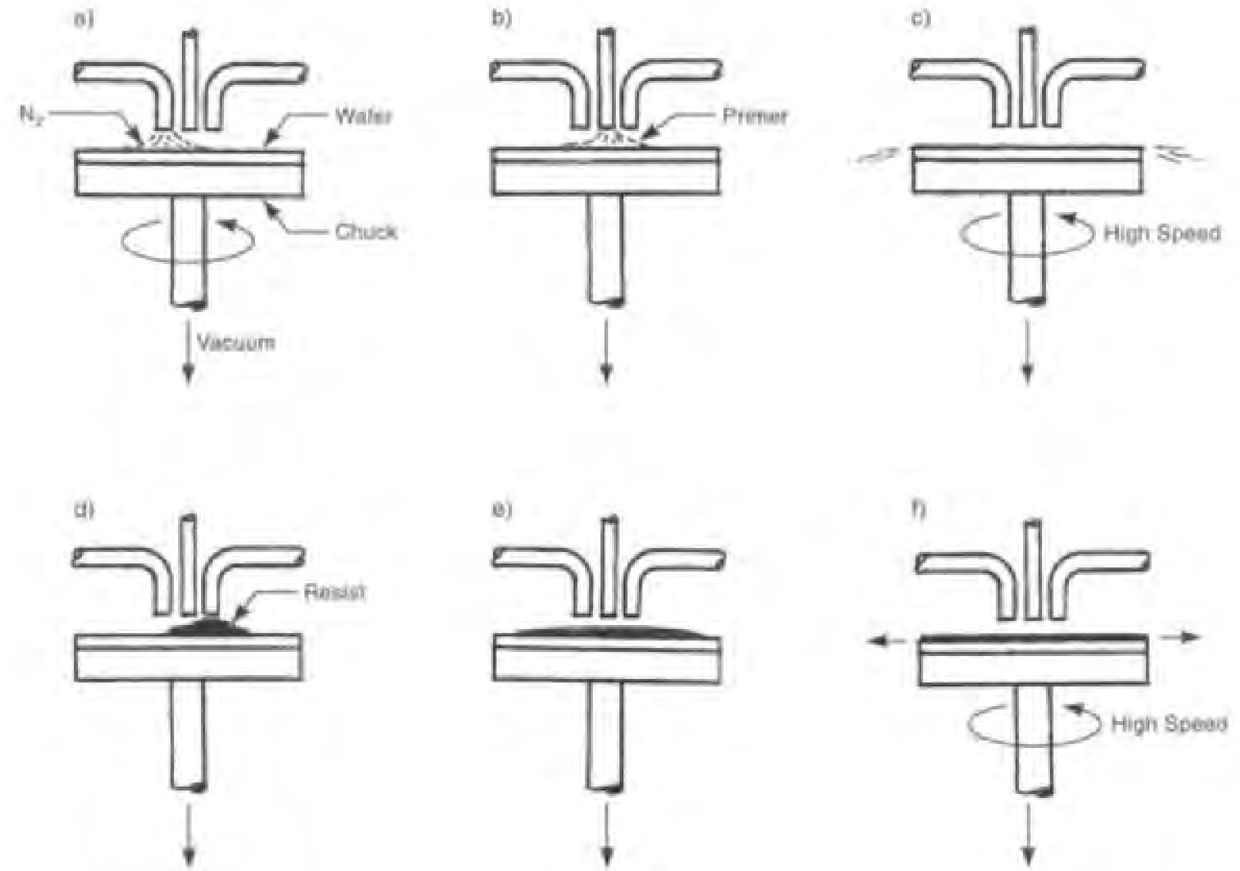

Fig. 13K3b1b One automatic system for applying resist to wafers: a) The wafer is positioned on a chuck, on which it spins, as nitrogen gas is blown against it to remove any dust or other foreign material. b) a primer is then dispensed onto the wafer, c) the wafer is spun at a high RPM to spread and dry the primer, d) resist is dispensed onto the wafer, e) the resist spreads and f) the wafer is spun rapidly to throw off excess resist and ensure that the remaining resist forms a thin, uniform layer. The wafer is then removed from the chuck and transferred to a baking station.

wafer. Then, all dies on the wafer are exposed at the same time.) Radiation from a light, x-ray, or electron beam is projected through the mask. Five steps are involved in these operations: 1) exact alignment of the mask or reticle to the wafer. 2) exposure of the wafer to radiation through the mask. 3) development of the resist, i.e., removal of unpolymerized (softer) resist material. 4) hard baking the resist to maximize its adhesion to the wafer surface. 5) inspection of the resist and wafer for proper alignment and freedom from defects. With a positive resist, the areas of the resist coating that are exposed to the radiation are thus rendered soluble and are dissolved and removed chemically. The open spaces in the resist are available for receiving the next operation which may be etching, doping or deposit of a film of another material.

The *alignment* of the mask or reticle with the wafer is an extremely critical element because of the minute size of the many millions of devices that may be crammed into each chip. Alignment marks are made on the wafers and masks to guide the operation. Several types of alignment devices are employed. One type, used for simpler chips with larger feature dimensions, puts the mask and the resist-coated wafer in direct contact. An optical microscope system is used to adjust the wafer position with respect to the mask until the two are correctly aligned. Another optical system uses light projected through the mask with a scanning technique. A more advanced system uses a stepper mechanism to move the reticle, rather than a full mask. A laser-based automatic device provides the alignment. The laser is projected through the alignment mark on the reticle to the corresponding mark on the wafer. The reflected beam is fed to a computer that adjusts the reticle position until the alignment is correct. Then exposure takes place, the stepper moves the wafer to the next die position and alignment and exposure take place again. The process is repeated until all the dies on the wafer have been covered. Still another system utilizes electron beam alignment and direct exposure of the wafer with a computer-controlled electron beam instead of one projected through a reticle or mask. X-ray alignment systems are under development for the most densely packed chips. In the course of making complete chips on a wafer, different alignment and exposure systems may be employed on the several layers (up to about 20) of each chip. Even the most advanced chips have some layers that do not need extremely small spaces for circuit devices; these layers are more economically exposed with the less advanced alignment and exposure systems.

The *development* of the resist layer takes place by the chemical dissolution of the unpolymerized areas. Negative resists, those that polymerize upon exposure to light or other radiation, are typically dissolved with xylene and rinsed with *n*-butylacetate. Positive resists become more soluble after exposure, and the exposed areas are dissolved with sodium hydroxide (NaOH) or tetramethyl ammonium hydroxide (TMAH) and then rinsed with water. Developer and rinse are applied by spray methods. The wafer is attached by suction to the horizontal surface of a rotating chuck, and the developer, followed by the rinse liquid, are sprayed from above. With positive resists, the developer is heated and first "puddled" on the wafer for a period of time. Then more developer is sprayed on. After rinsing, for both types of resist, the wafer is spun rapidly by the chuck to drive off the liquids and aid drying.

After development, the resist coating on the wafer undergoes *hard baking*, a heating step that evaporates more of the solvent in the resist with the purpose of enhancing its adhesion to the wafer surface. Typical baking temperatures are 270 to 390°F (130 to 200°C) for 30 minutes. Inspection of the resist, with automatic equipment, follows before the wafer is moved to the etching operation.

K3b2. ***etching*** - After the resist is developed and the developed portion removed, the substrate (or film on the substrate) may be etched in those areas not covered by resist. The purpose is to transfer the pattern in the resist to the surface layer of the wafer. Etching is used to create circuit patterns in layers of aluminum or other conductors and to create a mask in an oxide film for high temperature diffusion. The etchant must be a material that dissolves the desired material effectively but does not dissolve the remaining resist mask or other needed microelectronic materials.[5] There are two basic etching methods: *wet etching* and *dry etching*.

K3b2a. ***wet etching with liquid etchants (wet chemical etching)*** - The etchant is applied by immersion of the wafer in etchant solution or by spraying. Liquid etching has limitations

Next Page

in the size of the circuit paths or features that can be etched, and the thickness of the layer etched. Etched features must be no less than 3 or 4 microns (1.2 to 1.6×10^{-4} in)[9] wide. Fig. 13K3b2a illustrates schematically the common effects of the wet etching operation on the microcircuit. The choice of etchant can be made from a variety of possible chemicals, and depends largely on the material to be etched and the adjacent and underlying materials that are not to be etched. Dilute hydrofluoric acid is a common choice because it dissolves silicon dioxide, the usual layer to be etched, but does not attack silicon.

In *immersion etching*, the wafers are placed in a tank of etchant for a specified period, then rinsed twice, and dried by spinning. The wafer is rinsed immediately after quenching in a vessel that flushes the rinse solution away from the wafer to ensure that there is no further contact with the etchant. Careful control of the time of contact with the etchant is important. Surfactants are usually added to the etchant solution to aid in wetting. Agitation and heat are also used to ensure contact with fresh etchant, remove trapped air and any gas bubbles that are formed by the etching reaction, and to promote uniformity of etching.

Wet *etching by spraying* has replaced much immersion etching. Spray application has the advantage of using less etchant and ensuring that only fresh etchant is brought into contact with the wafer. In one spraying method, the wafer is held, by vacuum, on a rotating chuck on a vertical shaft. The wafer stays on the chuck for application of the etchant, for rinsing and for spin drying. (The rotational speed is increased for drying.) Separate nozzles are used for etchant and rinse water, and the sequential steps take place immediately after one another.

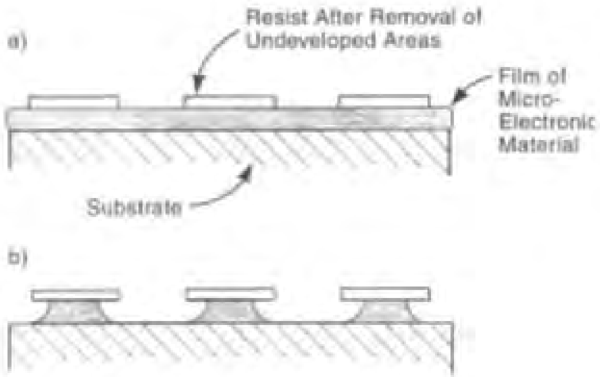

Fig. 13K3b2a. How wet chemical etching, one step in the sequence of making discrete devices from a film of microelectronic material, affects the integrated circuit. a) before etching the film but after removal of undeveloped areas of resist. b) after etching away unneeded microelectronic material. Note the undercuts made at the edges of the protected areas, since the etchant acts horizontally as well as vertically.

K3b2b. ***dry etching*** - includes plasma etching, ion beam etching and reactive ion etching. Two varieties of plasma etching are: planer etching and barrel etching.

The control and environmental disadvantages of wet etching, coupled with the inherent limits to the minimum line width achievable, have led to extensive use of plasma etching, particularly when fine-line circuitry is required.

K3b2b1. ***plasma etching*** - The plasma, a low pressure body of neutral ionized gas, is produced for integrated circuit etching by applying radio-frequency energy to gas contained in a vacuum chamber of approximately 10^{-3} atmospheres (10^2 Pa).[9] The ions, molecular fragments,[5] and electrons in the plasma, all with high energy, react with the film or substrate material of the wafer, to etch the material. If the compounds formed are volatile, they will evaporate and be carried away. Fig. 13K3b2b1 shows the workings of a planer reactor set up for plasma etching with reactive ions. This method provides favorably uniform etching.[5] The wafers are arranged horizontally between two planar electrodes that are closely spaced. Radiation sensors detect changes in the radiation given off by the wafers during the operation and these changes are used to control the amount of etching by triggering shut off devices in the plasma system. The gas used in the operation depends on the material to be etched since it must react with that material. The process, then, provides etching from both energy and chemical effects. Aluminum conductors are etched with chlorine plasma; nitride, oxide, and silicon are usually etched with gases containing fluorine.[5]

K3b2b2. ***ion beam etching (sputter etching or ion milling)*** - is a physical process in contrast to the chemical nature of plasma etching.

Previous Page

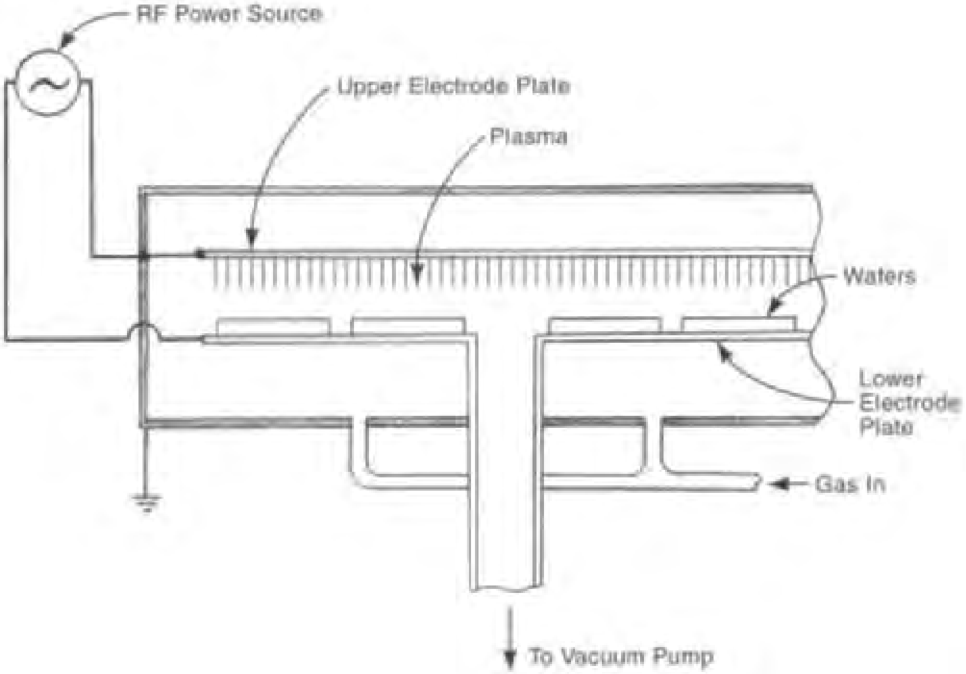

Fig 13K3b2b1 Reactive ion plasma etching.

The process involves the placement of wafers in a vacuum chamber in which they are subjected to a stream of ionized argon gas. The argon is ionized by a stream of high-energy electrons from cathode/anode electrodes. The wafers are negatively grounded so that the ions are attracted to them, and their speed is accelerated as they approach. When they strike the wafer, the ions have enough energy to dislodge material from the wafer surface. Etched areas have good definition, but the ion beam is non-selective and there are radiation effects. Fig. 13K3b2b2 illustrates the process schematically.

K3b2b3. ***reactive ion etching (RIE)*** - is a combination process involving elements of both plasma and ion beam etching. It is particularly suited to etching layers of silicon dioxide over layers of silicon. The process has higher selectivity ratios than plasma etching and has become common for critical ICs. (The selectivity ratio is the ratio of etching rate of the target material compared with that of other materials.)

K3b3. ***stripping photoresist from wafers*** - The photoresist film is removed after etching, since it has served its purpose of limiting the etching to the desired areas. The film is also removed after ion implantation. Wet chemical stripping is the most

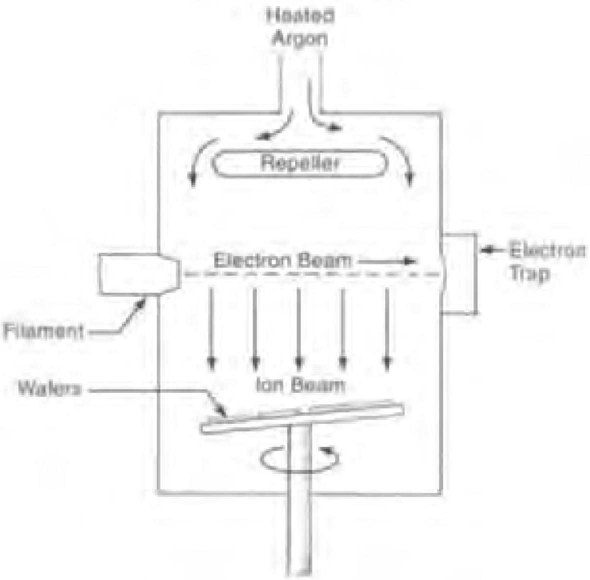

Fig. 13K3b2b2 Ion beam etching shown schematically.

common method but an oxygen plasma is also used. The wet methods are more economical, are effective in removing metallic ions and do not expose the circuit elements to radiation. The choice of chemical strippers depends on the nature of the resist material to be stripped and the wafer materials that will be contacted by it. When the materials involved, other than polysilicon, silicon dioxide, or silicon nitride, are non-metallic, solutions of sulfuric acid with an oxidant (hydrogen peroxide or ammonium persulfate) are used. About 10% of nitric acid in the mixture may also be used as an oxidant. With these strippers, the resist is dissolved by oxidation.

When metalized surfaces are involved, several proprietary formulations are available. Strippers using sulfonic (organic) acid and a chlorinated hydrocarbon solvent are alternatives. These solutions have detergent action and are applied with heat of 195 to 250°F (90 to 120°C), often in two steps, each followed by thorough rinsing and then a final drying operation. Several solvent and solvent/amine strippers are available for positive-type resists. These are often used with heat. Special other strippers have also been developed for particular conditions.

Dry stripping is performed with a plasma. Oxygen (O_2) plasma, created in a chamber containing wafers, oxidizes the resists to carbon dioxide and water. The term, *ashing*, is used to refer to such stripping. Plasma stripping is effective in removing resists that have been hardened by ion implantation but does not remove metallic ions. In some situations, both plasma and wet stripping are used. The plasma removes hardened resist and is followed by wet stripping.

K3c. ***doping (dopant defusion)*** - selectively changes the electrical conductivity of the semiconductor materials (silicon, germanium, gallium arsenide). The operation introduces impurities to the lattice structure of the semiconductor. In producing a silicon semiconductor, two different impurities are used and each is introduced in an adjacent area of the silicon surface. Boron, phosphorus, arsenic and antimony, are dopants for silicon. Two major methods for achieving this condition are *thermal diffusion* at high temperatures and *ion implantation.*

In the *thermal diffusion* method, wafers are first cleaned and then acid etched to remove any oxidation that may have grown on the surface. Then the areas to be doped are exposed to the dopants, while the silicon wafer is heated in a tube furnace to a temperature between 1500 and 2200°F (815 to 1200°C). A nitrogen atmosphere is maintained around the wafers when they are loaded into the furnace and when they are unloaded. The high temperature causes vacant spaces to develop in the crystal structure of the silicon, and the dopant material, if sufficiently concentrated, migrates to these open spaces. The rate of dopant diffusion increases with increased temperature. The source of the impurities is either a gas, a liquid vapor, or a deposit of oxide that contains the impurities. A film dopant mask, with openings, isolates the areas where the dopant material can be absorbed. Following diffusion, the wafers are heated to a higher temperature for a period to distribute the dopant deeper into the wafer. This step is called *drive-in oxidation* and it produces an oxide surface at the doped areas. Figs. 13K3c, 13K3c-1 and 13K3c-2 illustrate equipment used for thermal diffusion doping.

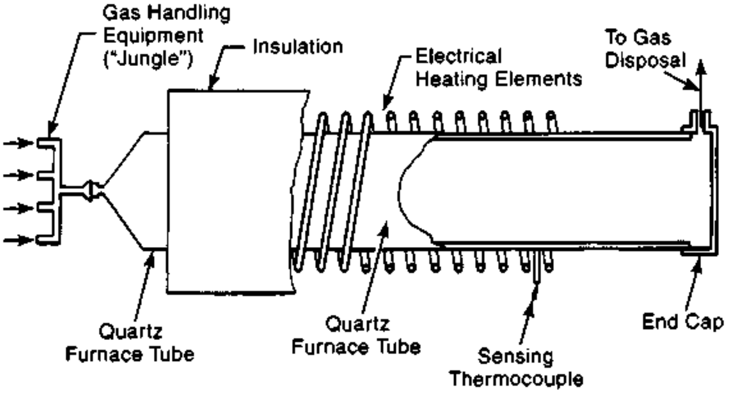

Fig. 13K3c A furnace used in the diffusion doping of integrated-circuit wafers. (*Reproduced with permission from Microlelectric Processing - An Introduction to the Manufacture of Integrated Circuits, by W. Scott Ruska, McGraw-Hill, 1987.*)

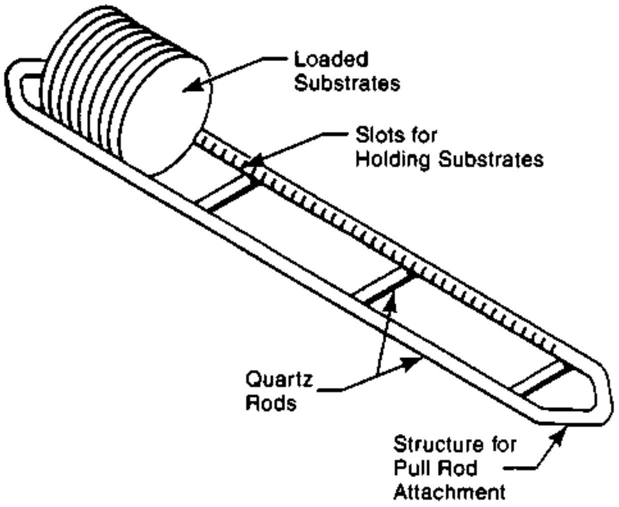

Fig. 13K3c-1 A quartz "boat" for holding integrated circuit wafers during diffusion doping. (*Reproduced with permission from Microlelectric Processing - An Introduction to the Manufacture of Integrated Circuits, by W. Scott Ruska, McGraw-Hill, 1987.*)

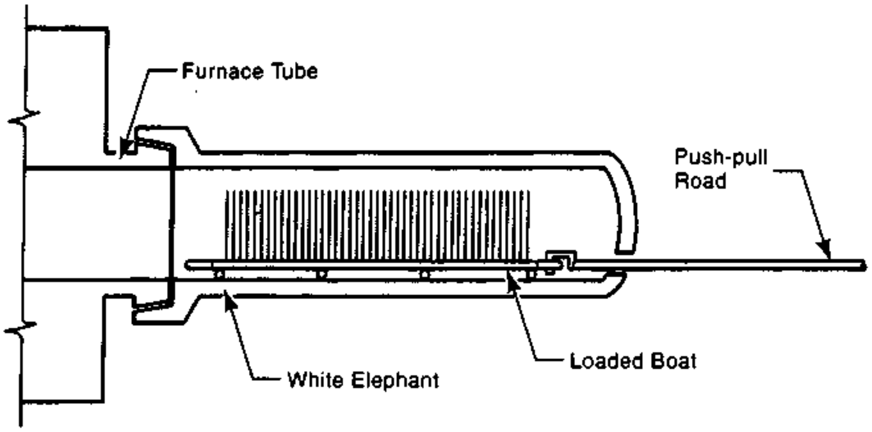

Fig. 13K3c-2 Insertion of a loaded diffusion boat into a diffusion-doping furnace. Note the use of the push-pull rod and the temporary furnace extension called a "white elephant". (*Reproduced with permission from Microlelectric Processing - An Introduction to the Manufacture of Integrated Circuits, by W. Scott Ruska, McGraw-Hill, 1987.*)

Ion implantation - For the most advanced integrated circuits with extremely close spacing of devices, closer control of the depth, width, and degree of concentration of the dopant, is required. Ion implantation, which provides better control of these factors, may be used as a doping method rather than thermal diffusion. Ion implantation utilizes intense beams of high-energy ions of the dopant material, at an energy level of 10 to 500 keV. The dopant source is usually a gas, though solid materials are also used. Electrons from oppositely charged electrodes turn the gas molecules into ions. The operation is performed in a vacuum, with specialized equipment such as a Van de Graaff generator.[9] The beams are able to be purified, accelerated, and focused at a precise spot on the wafer with this technique, and the amount of dopant can be closely controlled. It is deposited to a depth of from a few hundred angstroms to several microns.[10] A scanning system is usually used to cover the full area to be doped. Because the beam energy level is sufficient to cause damage to the silicon lattice, annealing after the operation is performed as described below. Annealing removes much of the damage to the structure[9] and diffuses the dopants to the desired locations in the silicon.

K3d. ***heat treating*** - The wafer is heated to produce effects or changes in the wafer material. Annealing and "alloying" are two heat-treating operations. Wafers are also heated for other reasons, including soft and hard dehydration baking, to remove solvents from photo resist film and provide more accurate patterning.

K3d1. ***annealing*** - is a heating operation performed after doping by ion implantation. The implantation disrupts the crystal structure of the wafer. However, heating the wafer to a temperature between 1100 and 1770°F (590 and 970°C), restores the structure and activates the dopant. This temperature, however, is below the level that would cause the dopant to diffuse laterally. The operation is performed in a tube furnace in a hydrogen atmosphere and requires about 15 to 30 minutes.

Another method for annealing is rapid thermal processing (RTP) which provides better protection against spreading the dopants. The cycle takes place in a chamber with a gas inlet and outlet, with radiant heat sources above the wafer, and sometimes below. The operation is automatic. Tungsten halogen lamps are most common as heat sources, but graphite, microwave, and plasma-arc heaters may also be used. The surface of the wafer is brought up to the annealing temperature in less than a minute and then is rapidly cooled. The wafer body remains at a much lower temperature. The necessary annealing of the surface crystal damage takes place, but the doping is not permitted to diffuse.

K3d2. ***alloying*** - is a heat treatment operation that takes place after metallic layers have been deposited and patterned into the wafer. Its purpose is to ensure good electrical contact between the metal circuitry and the locations of semiconductors and other devices on the wafer surface. The operation involves heating the wafer in a nitrogen atmosphere to a temperature of approximately 840°F (450°C). The term "alloying" has been used to identify this operation.

K4. ***wafer testing and sorting*** - After all the circuitry has been incorporated in the wafer, each individual die is tested to verify the circuit function and that the die meets all other design specifications. This testing takes place before the individual dies are separated from the wafer. The wafer is held in a test fixture that aids in the alignment of many narrow test probes, one of which contacts each connection pad of the die. The testing sequence, measurement of results, and decision of acceptability or not, are all under computer control. The computer notes, in its memory, which dies on the wafer are acceptable and which are not. See Fig. 13K4.

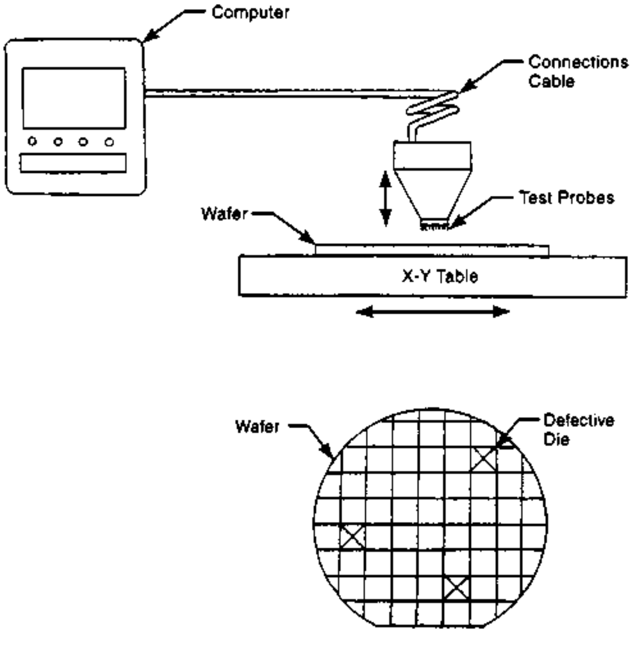

Fig. 13K4 The wafer sorting operation. Test probes contact the connection pads of each die and a computerized functional test is made of the die. The x-y table then moves another die into position for testing. The process is automatic. Any defective dies are identified through the computer network and are separated from the usable dies at the later dicing operation.

K5. ***packaging (assembly) of chips*** - The purpose of packaging (after the die is separated from the wafer) is to provide strong leads for easy connection of the chip to a circuit, to protect the chip from physical damage and exposure to reactive environments, and to dissipate heat. The package consists of a base surface (sometimes a recessed surface) to which the chip is attached, external leads or pads to connect the IC to a circuit board, internal leads or pads to which the chip can be electrically connected, wires or other means of connecting the chip to these internal leads, and an enclosure to provide protection and heat dissipation. The enclosure may be made of metal, ceramic, or plastic. Fig. 13K5 illustrates some typical IC packages. Prior to packaging, the dies are prepared to be assembled into a package. The operations include backside preparation and electrical testing, completed while the dies are still part of the wafer. The good individual dies are marked and separated from the wafer in the dicing operation. Each one is then mounted in and attached to a ceramic, plastic or metal package or carrier. The operations that follow consist of bonding the connecting wires, assembling, closing and sealing the packaging, plating and trimming the leads, and marking and final testing of the packaged IC. The packages may be individual or may contain several chips. A chip may also be mounted on the substrate of a hybrid circuit or directly on the circuit board as a chip-on-board (COB). The package protects the chip while allowing all electrical connections to be made to it. Each bonding pad of the chip must be connected to a lead of the package or to a circuit board. Very fine wires between the chip and leads of the package are bonded, welded, or soldered. The external leads of the package are designed to facilitate insertion into the circuit board or, if surface mount technology is involved, to facilitate a solder connection to the board. The completed packaged ICs are tested, marked and packed for shipment. At the customer's plant the packaged chips are assembled on, and

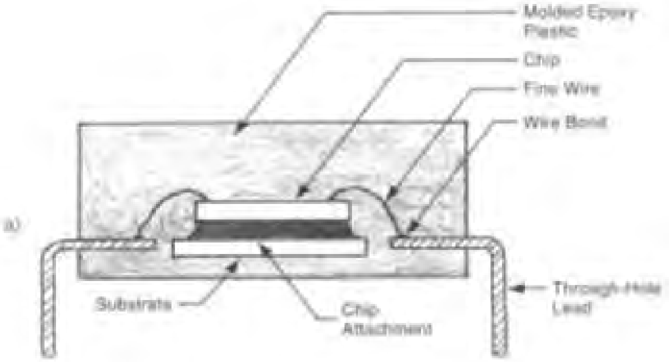

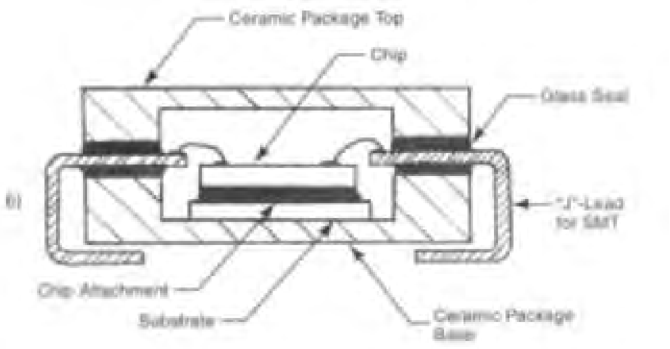

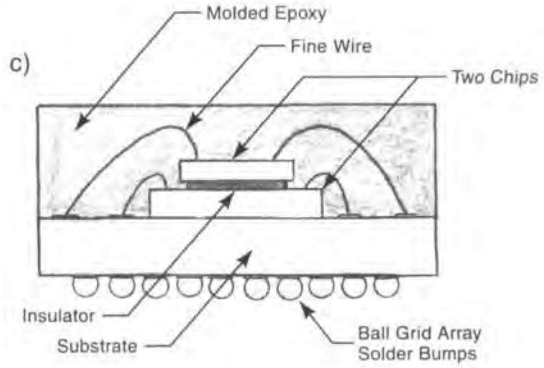

Fig. 13K5 Typical IC packages showing chip, bonding wires, leads, and enclosure. a) a plastic package. The enclosure is a one-piece molding of epoxy. The leads, in this example, are made for through-hole connection to a circuit board. b) a ceramic package in two pieces, sealed with low-melting-temperature glass. This package uses J-leads for connection by surface mounting (SMT) to a circuit board. c) A single package of two integrated circuits. A ball grid array is used to connect the leads to the circuit board.

connected to, printed circuit boards that are used in computers or thousands of other electronic products.

K5a. ***backside preparation***[12] - Some chips that are to be used in thin packages or those that have some backside junctions or damage are reduced in thickness in the wafer state. This is done by surface grinding the bottom of the wafer, followed by chemical-mechanical polishing. Chemical-mechanical polishing is performed in the same way as it is done to prepare the plane flat wafers for processing. Some thinning is also carried out by chemical etching of the bottom side. The thickness, after thinning, is typically 0.008 to 0.020 in (0.2 to 0.5 mm). Gold is sometimes applied to the bottom side of the wafer by vacuum coating or sputtering. When used, the gold becomes part of a gold-silicon eutectic solder to fasten the chip to the package substrate.

K5b. ***dicing (die separation)*** - Individual dies are separated from wafers by one of two methods: sawing, or scribing and breaking. When sawing is used, the cut between the dies is made with diamond-bladed circular saws. Sawing is the preferred method, especially with thicker wafers. With the other technique, lines are scribed between the dies with a diamond- pointed tool, and the individual dies are broken free at the scribe lines by stressing the wafer with a cylindrical roller. Sometimes, a combination method is used: Saw cuts are made part way through the wafer and the dies are then separated at the cut line by roller stressing the wafer. After separation, the dies are referred to as *chips*.

K5c. ***chip insertion and fastening to the package*** - Chips separated from the wafer are placed, with others, on a carrier tray called a plate. This operation may be manual or automatic but, either way, the die is held with a vacuum wand. When the operation is manual, the defective chips are marked so the operator does not move them; when the operation is automatic, computer-controlled pick and place equipment is used, and is fed data from the wafer final testing operation, so that only good chips are placed on the plate. The plates are transported to the package assembly area. From the plate, each chip is picked and placed in the chip attachment area of the designated package. The operation may be manual but, for larger quantity production, it is performed by computer controlled pick and place equipment. Two methods are used to fasten the chip in the designated location: 1) soldering with gold-silicon eutectic or other solder or, 2) bonding with epoxy adhesive.

When the eutectic chip attachment method is used, a small preform of gold-silicon alloy may be placed in the chip-attachment area of the package before the chip is placed. The package is heated to the melting temperature of the eutectic alloy, about 720°F (380°C).

"Scrubbing" takes place after the alloy has melted. This consists of motion between the chip and the package to ensure that the eutectic alloy is distributed uniformly across the joint and that the chip and package are close together. The joint is then cooled until the eutectic alloy solidifies. When automatic placement of the chip is used, the equipment carries out both the placement and scrubbing and controls the heating and cooling cycles. Eutectic attachment provides good heat dissipation properties and is used for high-quality, high reliability applications.

When epoxy attachment is used, a measured amount of thermally and electronically conductive liquid epoxy adhesive is dispensed or screen printed in the chip attachment area. The chip is positioned and pressed into place to provide a uniform adhesive layer between the chip and the package. Oven heat is used to set the epoxy. With this attachment method, the operation may be either manual or automatic. Epoxy attachment is less costly than the gold-silicon eutectic system. The epoxy can constitute an insulation layer or, if silver filled, can serve as both an electrical ground connection and a heat transfer channel.

K5d. ***wire bonding*** - is a means of providing an electrical connection between a wire and a contact surface. It is most used in connecting a fine wire of gold or aluminum between an integrated circuit ("chip") and the electrical leads of the package that houses the chip. The method is also sometimes used to connect fine (0.001 in - 25μm) diameter gold wire to printed circuit boards.[9] The most common use, however, is to connect the chip to the inner ends of the leads that later connect the finished IC to a circuit board. A characteristic of the bonding method is that the connection is made without bringing the metals involved to the melting point. When gold wire is used, the end of the wire to be attached is first made into a ball from the heat of an electrical spark or small flame. There are two common bonding methods: *thermocompression* bonding and *thermosonic* or ultrasonic bonding. With either method, automatic machines are commonly used. In thermocompression bonding, the metallurgical bond at the molecular level is made by heating the metal elements that are in contact without melting them, and then applying pressure. In the ultrasonic method, both pressure and ultrasonic vibration are used to break up surface layers of the materials and achieve a bond. Fig. 13K5d illustrates the thermocompression method. The thermocompression method is the faster of the two. Aluminum bonding wire is usually used because of favorable metallurgical effects. Aluminum is also joined by ultrasonic bonding.

K5e. ***closing and sealing the package*** - After the wiring connections are made between the chip and the leads of the package, a metal, ceramic, or plastic enclosure is assembled over the chip and wires, and is sealed. Seals may be hermetic, with metal or ceramic enclosures, or near-hermetic with plastic enclosures. Hermetic seals are used in many aerospace and military applications when the package may be exposed to harsh environments. Near-hermetic seals are adequate for most consumer-product and commercial applications. Metal enclosures are welded or soldered to the substrate of the package. Resistance welding techniques are used when the joint is welded. Projection welding and seam welding are the methods used. (See Chapter 7. sections C6c and C6b.) Resistance welding has the advantage of having the joint heat highly concentrated so that temperature sensitive materials in the package are not harmed. Soldered joints often use preforms of gold-tin alloy and are melted in a furnace with a nitrogen atmosphere at a temperature of 610 to 680°F (320 to 360°). Ceramic enclosures and lids are normally sealed with glass of low melting point. A furnace temperature of approximately 750°F (400°C) with a dry, clean-air atmosphere is used. The resulting packages are known as cerdip or cerflats depending on the package configuration. Molded epoxy enclosures are predominantly used in many applications. They are produced by transfer molding where the connected chip and lead frame assembly constitute an insert in the mold. The liquid or near-liquid epoxy flows around the inserted parts, fills the mold, and solidifies. Further curing of the epoxy in an oven may take place after the molding operation.

K5f. ***lead plating and trimming***[12] - After the package is assembled and sealed, the external leads are coated with solder, tin, or gold to promote solderability when the IC is connected to the circuit board and to provide corrosion protection. Solder is applied by dipping or by passing the package through wave soldering equipment. Tin and gold are applied by electroplating. Leads, that are sometimes attached together for ease of handling and assembly to the package and to ensure correct spacing, are also trimmed to remove the unneeded attachment and to provide the proper length of lead.

K5g. ***marking and final testing***[12] - The finished IC is marked by laser etching, or by ink-jet or offset printing. The ink is cured by exposure to ultraviolet light, or by oven or room-temperature drying. The marking provides product identification and specifications, the date of manufacture, lot number, and name or location of the factory.

Final testing has the purpose of separating defective or failure-susceptible packages. It includes a series of electrical tests of the circuitry and then deliberate exposure to potential environmental hazards. Prior to the test, the packages are subjected to a prolonged oven bake - typically at a temperature of 300°F (150°C) for 24 hours. This step is designed to stabilize the package and chip and to drive off any volatile materials. The electrical tests include a verification that the IC meets electrical specifications, and an operational test to ensure that it functions as it should. Sometimes , a "burn-in" stress test is conducted. This is intended to induce failure in the test if the chip has a weakness that otherwise could lead to early failure in its use. Tests of package integrity and resistance against environmental threats is also carried out. These tests include exposure to high and low temperatures and to high acceleration forces in a centrifuge. Tests are computer controlled and the loading and unloading of packages into the test apparatus may be either automatic or manual.

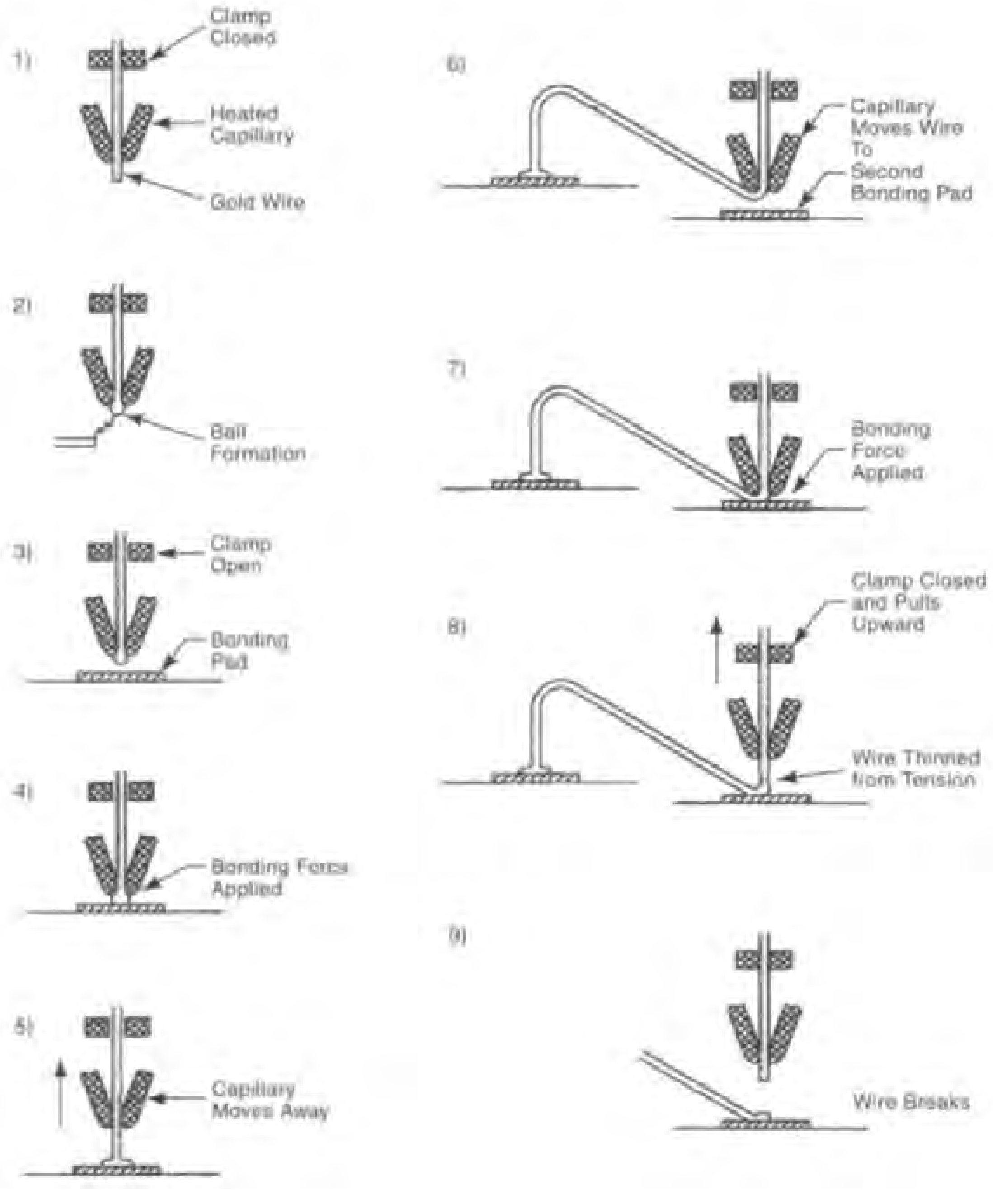

Fig. 13K5d Wire bonding by the thermocompression method, showing formation of ball and wedge bonds: 1) The wire is heated by the hot hollow capillary. 2) A ball is formed at the end of the wire by an electric arc. 3) The ball is lowered to the bonding pad. 4) Force is applied to create the bond. 5) The capillary moves away on the wire; the bonded end remains. 6) The capillary moves the wire to the second bonding pad; enroute it heats the wire. 7) Bonding force is applied to bond the wire to the pad. 8) The clamp closes and pulls the bonded wire; the wire thins from the tension. 9) The wire breaks and the capillary starts to move the wire to the next bonding pad to repeat the cycle. When thermosonic bonding is used, ultrasonic vibration is applied to the wire by the capillary.

K6. *other methods of connecting the integrated circuit to the board*

K6a. ***chip on board (COB) technology*** - refers to the procedure of attaching integrated circuit leads directly to the circuit board. This is often preferred to having the chip manufacturer package the chip in an enclosure, with internal connections to external input-output leads that must then be soldered to the circuit board. In one COB approach, called chip-and-wire-technology, the tiny wires are excluded from the chip as received and are bonded by the board assembler to both the chip and the circuit board. In other approaches, the fine wires are bonded to the chip by the chip manufacturer, and the board assembler then bonds the other ends to the circuit board. In either approach, a glob of epoxy resin over the chip, and the circuit board below it, provide the protection to the chip that would otherwise be provided by the chip package. This approach is used, among other applications, in automotive equipment. Fig. 13K6a illustrates the concept.

K6b. ***conductive adhesive connections*** - are made from one-part, quick setting epoxy, containing small flakes of silver to provide conductive paths. These connections are not used extensively because of higher cost and limitations of impact strength. They are used when there is some flexing of the circuit board and have the benefit that high temperature heating is not necessary to effect the electrical connection. The epoxy is dispensed to connecting tabs of the circuit board where it will bond to copper or solder alloys. Component devices are then positioned and the epoxy is cured, typically at around 265°F (130°C).

K6c. ***tape automated bonding (TAB)*** - is a means of electrically connecting chips to circuit boards, other substrates or packages. Instead of using fine gold or aluminum wires to connect chips, TAB utilizes thin, flat metal conductors that are mounted on a tape of polyimide film. The tape facilitates the positioning of the conductors to pads on the chip. The copper conductors are either deposited as a layer on the tape by using sputtering or vacuum deposition, or made from a layer of copper foil. The copper lead pattern in the layer is produced by photolithographic processes or by mechanical blanking. The copper conductors are then plated with nickel for corrosion protection, and with gold to facilitate bonding. A window opening is made in the tape for bonding the inner leads to the chip, and another for bonding or soldering the outer leads. The windows are made either by blanking before the foil is added, or by chemical blanking after the leads are in place. Fig. 13K6c illustrates the tape with leads affixed, and shows the means of bonding the leads to a chip. Bonding to the chip is the first connection. Thermocompression bonding is used to connect the inner leads to gold bumps on the pads of the chip. One tool, called a thermode, provides the heat and pressure for all chip connections simultaneously. The operation is highly automatic and quick. After bonding of the tape to the chip, the chip is normally covered with a liquid resin encapsulant that, when the resin hardens, provides protection to the chip and the connections. Another advantage of TAB is that the tape connecting leads are very thin, helping provide a low profile for the IC, if that is needed. The other ends of the tape leads are connected to the circuit board or other substrate by one of several methods: reflow soldering, conductive

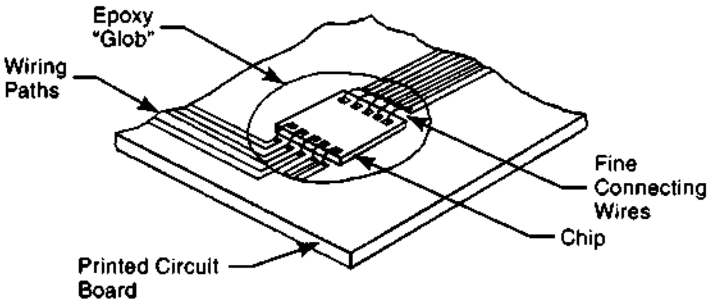

Fig. 13K6a Chip-on-board (COB) packaging of an integrated-circuit chip. A glob of epoxy plastic, material very similar to that used to mold plastic packages, covers the chip and its wiring connections to the circuit board. The plastic provides physical and chemical protection to the integrated circuit. Note: The epoxy glob is opaque, but is shown here as transparent to illustrate the items it covers.

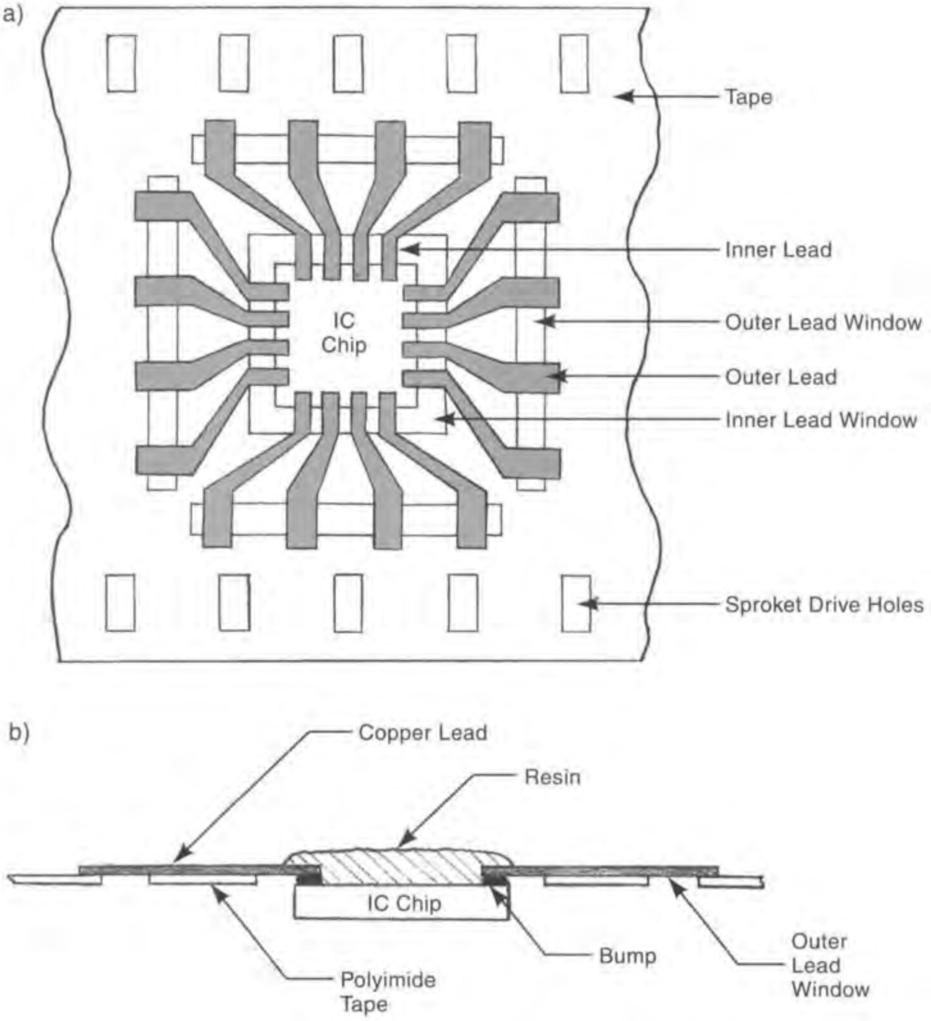

Fig. 13K6c Tape automated bonding (TAB) of an integrated circuit chip: a) a plan view of the copper leads affixed to a polyimide tape with window openings for connection to a chip and later for connection to a package substrate or circuit board. b) a cross section of the chip bonded electrically to the copper leads with a protective resin coating over the chip and the connections.

adhesives, or thermo-compression bonding. A portion of the plastic tape backing is retained.

K6d. ***flip-chips*** - constitute a method for connecting integrated circuits to printed circuit boards with no wire leads and very short connections. The design facilitates the operation of high speed devices such as PC microprocessors. With this method, the chip is first connected to the substrate of the IC package. Solder bumps are provided on the top of the chip by plating, or by stenciling solder paste on the connection pads and then reflowing. The chip is inverted ("flipped") and positioned on the package substrate. Pads on the substrate match the spacing and position of the bumps on the chip. The chip is then reflow soldered again to connect the chip circuits to the substrate. The balance of the package then can be assembled to the chip. There is a small space between the pads on the chip and the pads on the substrate so that the solder connection is almost spherical in shape. This provides some flexibility in the connection. The substrate has internal wiring

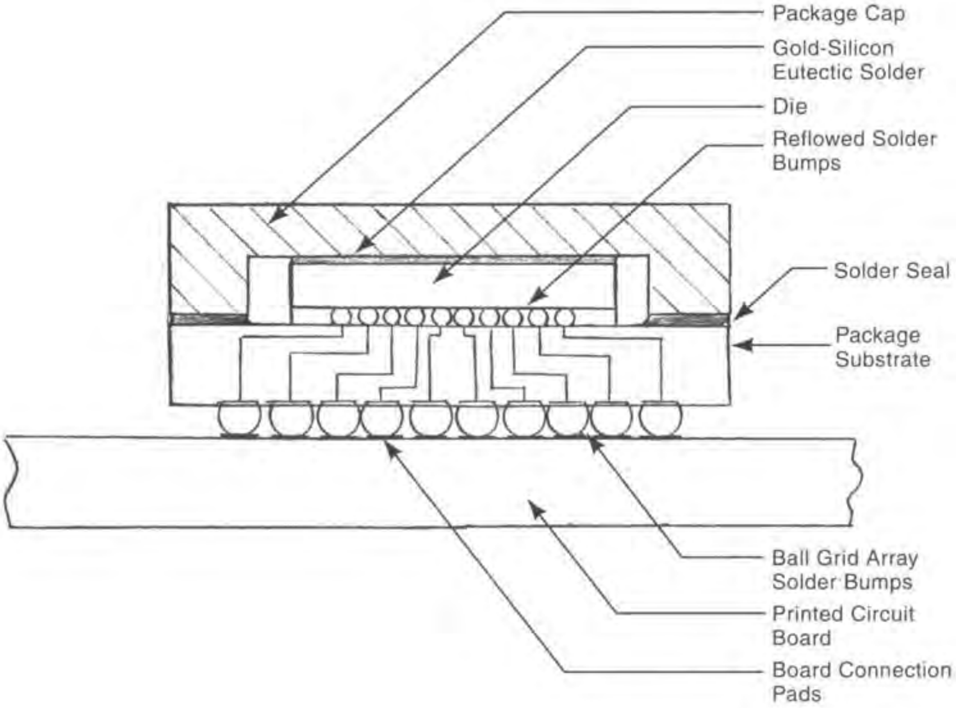

Fig. 13K6d Example of a flip-chip connected to a circuit board with a solder sphere ball grid array.

channels that connect to underside wiring pads, which are larger and more widely spaced than the pads on the chip and the top of the substrate. These pads are used to connect the packaged chip to the circuit board, using the ball grid array method. Solder spheres are positioned and held in place on the circuit board with a tacky flux. When these spheres are reflowed, a very short connection with minimum capacitance effects is achieved. Fig. 13K6d illustrates the completed arrangement.

For added reliability of the solder joints, some flip chips receive *underfilling*. This involves the addition of a plastic encapsulant to the solder joint area. The encapsulant helps to distribute stresses caused by thermal cycling of a group of solder joints. Epoxy or silicone resins in low-viscosity form are dispensed to the joint from hollow needles and flow into the space between the solder bump connections by capillary action. Jet dispensing is also used.

Curing temperatures are in the 280 to 360°F (140 to 180°C) range.

L. Making Discrete Devices

Transistors, diodes, resistors, capacitors, inductors, and transformers are all included, where necessary, in integrated circuits. However, there are circuits in electronic products that need power handling capabilities, or other capacities greater or different than those normally included in integrated circuits. Output stages of electronic equipment and power supplies are two kinds of circuits that require discrete devices. Methods of producing the devices are discussed in the following:

L1. ***making resistors*** - Resistors are of several varieties: composition, film, wire-wound, or integrated circuit.

Composition resistors are molded into a cylindrical shape from a mixture of finely ground carbon powder, a powdered insulator material and a resin binder. The resistance value depends on the ratio of the carbon to the insulating material, as well as the diameter of the resistor. Copper wire leads are attached to the ends, and then a plastic or ceramic jacket is molded over the cylinder. The jacket is marked with the resistance value. Other composition resistors are made from mixtures of tin oxide, antimony, and glass.

Film resistors consist of a thin film of carbon, metal, or metal oxide deposited on a cylinder of ceramic or glass. A helical groove is cut into the film coating to narrow and lengthen it. The amount of resistance depends on the nature (resistivity) of the film, its thickness, and the pitch and width of the helical cut. The value of resistance may be measured during the cutting, and the cutting may be stopped when the desired resistance value is reached. Hence the resistance value of this kind of resistor can be made to be quite accurate. After the desired resistance value is set, the unit is encapsulated in silicone-treated glass and marked or color coded to indicate the value. Some film resistors are made with a serpentine pattern on a flat surface, rather than on a cylindrical surface. This minimizes inductive effects for resistors used in high frequency circuits. Fig. 13L1 illustrates a typical thin film resistor. The manufacture of thick film resistors is described above in section K3a6.

Wire wound resistors are made by winding resistance wire on a cylindrical ceramic form. After winding, the unit is inserted in a ceramic or metal container, or coated with vitreous enamel. These resistors have inductive and capacitive properties that limit their use to direct-current or low-frequency applications.

Adjustable film or wire wound resistors are made by incorporating a sliding contact in the construction and not coating the path where the contact slides. The length of the resistance material in the circuit controls the amount of electrical resistance.

Resistors in integrated circuits are formed from layers of the circuit. In one method, grown oxide layers are masked to provide the necessary shape, size, and location of the resistor, and are changed in resistivity by doping the masked area. Doping is accomplished by diffusion or ion implantation. Diffusion methods follow a series of steps very similar to those used to create transistors in the chip. By limiting the cross-sectional area of the resistance bar, high levels of resistance can be created. The other method of making resistors is to deposit a thin film of resistance material, nichrome, cermet (CrSiO), or tantalum and then laser trimming the film layer.

L2. ***making capacitors*** - Electronic capacitors have two or more electrodes separated by some dielectric. Numerous dielectrics can be used, from air with a relative permittivity of 1, to some ceramics with relative permittivities exceeding 1000. Air dielectrics are used in variable capacitors, and the ceramic, barium titanate, is the dielectric most frequently used in fixed capacitors in electronic circuits. In between these, are capacitors that use plastic films, glass, or kraft paper. Barium titanate ($BaTiO_3$) is made by mixing barium carbonate and titanium dioxide and firing the mixture. The two materials must be of high purity, have a sub-micron

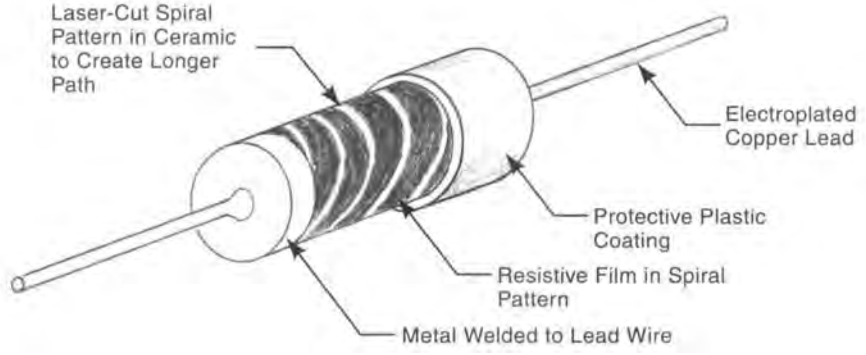

Fig. 13L1 A typical film resistor shown in a cutaway view. The ceramic core is coated with a film of resistive material. A laser cut creates a long spiral electrical path in the film.

particle size, and be mixed in a closely-controlled ratio. For disk capacitors, the resulting material, in dry powder form, is pressed into the shape wanted, or is made into a thin tape and blanked to shape. It is then fired at a temperature in the range of 2280 to 2460°F (1250 to 1350°C). Silver, in paste form, is screen printed on the surfaces to form electrodes, and is bonded to the surface by heating to a temperature of 1380°F (750°C). Leads are then soldered to the electrodes and the disks are encapsulated in epoxy or wax.

Multilayer capacitors can be made with desirably thin layers of dielectric, without suffering a strength loss. They have higher capacitance than the disk type, have small size, and operate well at high frequencies. They are used frequently in surface-mount circuit boards. Dielectric thicknesses can often be less than 0.00022 in (5 microns). Palladium, or a palladium/silver alloy, is used for the electrodes and the dielectric and electrodes are assembled together in layers before firing. (The palladium electrodes have a higher melting point than the firing temperature.) For less critical applications or when lower cost is important, ceramics with added glass or fluxes, and electrodes of nickel or copper may be used. These electrode materials are less costly and the assembled components can be fired together in a reducing atmosphere at temperatures of about 2000°F (1100°C).

Another common type of capacitor uses polyester, polystyrene, or polypropylene film as a dielectric, sometimes combined with a layer of kraft paper. The electrode is aluminum or zinc, coated on the plastic film by vacuum deposition. The combination is wound to a cylindrical roll shape. Connection wires are soldered in place and the cylinder is encapsulated in plastic. Fig. 13L2 shows the construction of typical multilayer capacitors and the construction of the wound-roll type.

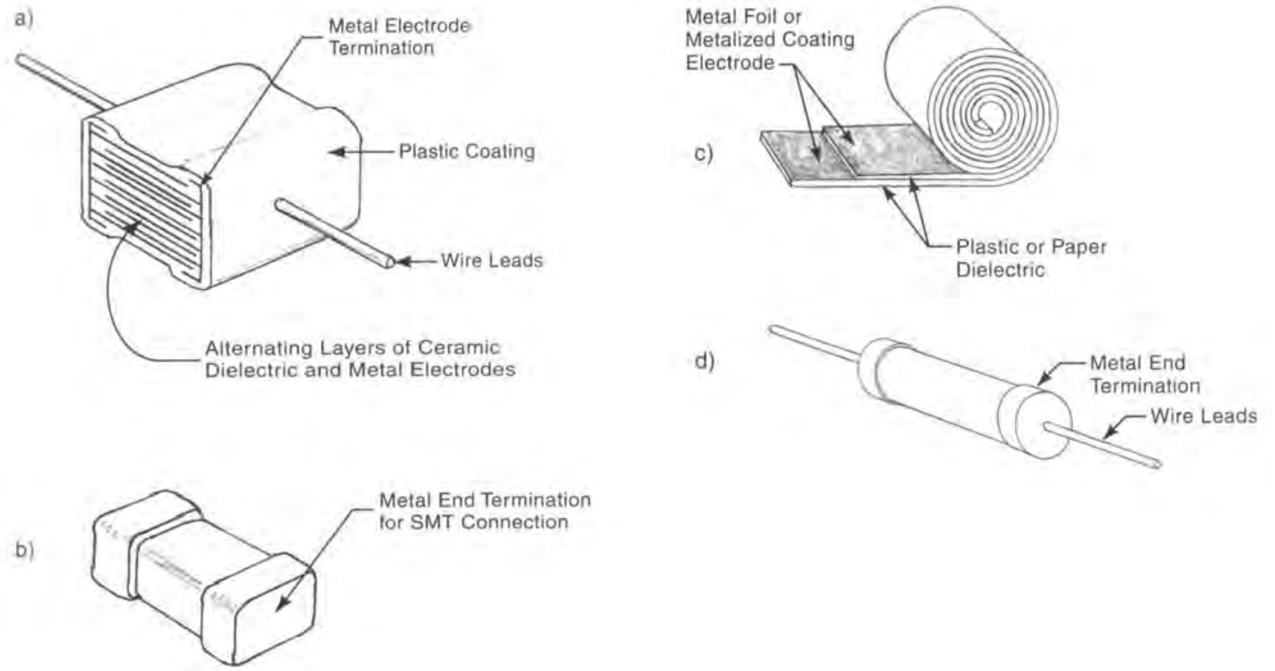

Fig. 13L2 Electronic capacitors -a) sectional view of the construction of a typical multilayer electronic capacitor with a ceramic dielectric, showing alternating layers of electrodes and dielectric connected to external leads. b) a similar capacitor to that in (a) except that, instead of wire leads, metal end terminations are used that are suitable for connection to surface mount printed circuit boards. c) the construction of spiral-wound capacitor with dielectric of plastic film or paper or layers of both, with metalized coatings or foil electrodes. d) the capacitor of view©) with leads connected to alternating layers of electrodes and with plastic encapsulation.

Thin-film capacitors are made by vacuum deposition of conductive layers and dielectric layers through masks that limit the areas of deposition. Dielectric materials used include tantalum pentoxide, silicon dioxide and monoxide, magnesium fluoride, and zinc sulfide. Capacitance is adjusted by laser cutting as is done with thick-film methods.

The manufacture of thick film capacitors is described above in section K3a6.

L3. ***making inductors (chokes, choke coils)*** - These are electrical or electronic devices that tend to oppose rapid changes in current intensity. They consist of coils of conductor wire, wound in a round or rectangular shape. Depending on the application and frequency, the coils may be wound on a magnetic core, a dielectric core, or have only an air core. Magnetic cores may be made of magnetic steel, ferrite, or pressed powdered metals. One common material is 50% iron and 50% nickel. Ferrites are ceramics consisting primarily of iron oxide with nickel, manganese, cobalt, or zinc oxides or carbonates.[12] Coil winding is a semi-automatic operation. The coil wire is wound directly on the core, on a bobbin, or on a mandrel whose cross section is the shape wanted in the coil. One end of the wire is attached to the mandrel that is then rotated, pulling the wire from a supply reel. As the wire is wound and builds on the mandrel, it is fed in such a way as to maintain even layers. Computer control can provide variable spacing of the wire turns, and can stack multiple layers in a desired shape or pattern. Sophisticated motor and braking apparatus can wind and stop quickly, to a desired fraction of a revolution.[12] When the correct number of turns have been made, the wire is cut, stripped, and connected to the terminals of the inductor.

Cores of powdered iron, nickel and other metals are made from finely-ground powder mixed with an insulating powder, pressed to the desired shape, and annealed to provide the desired level of magnetic properties. Ferrite cores are also made from finely-milled metal oxides, mixed with organic binders, dried, and pressed into the desired shape, fired in a controlled atmosphere and then tumbled to improve the surface and edge finish. Both metal and ferrite powder cores may be painted before assembly to the wire coil. After the coil is wound and connected, it is common practice to encapsulate the inductor in soft rubber covered with epoxy, or solely with epoxy. The inductor is then color coded and otherwise marked for identification. Fig. 13L3 illustrates a typical inductor for surface mounting on a printed circuit board.

The manufacture of thick film inductors is noted above in section K3a6.

L4. ***making transformers*** - Transformers convey energy from one circuit to another, usually stepping

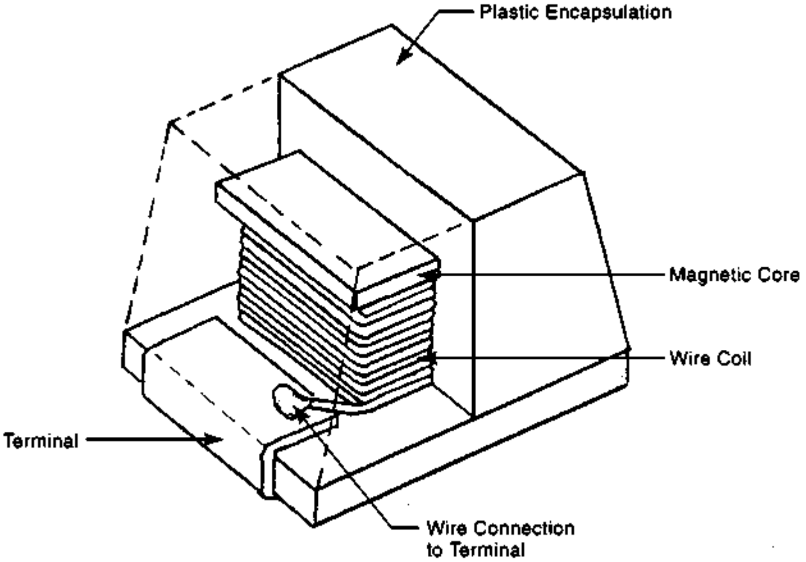

Fig. 13L3 Cut-away view of an inductor suitable for mounting on a surface-mount-type printed circuit board.

AC voltage up or down at the same time. Two major components are the coils of wire, each wound with a specific number of turns. (The ratio of number of turns is the ratio of the voltage change between the circuits.) Another major component is the metal core that is magnetic and is normally made from an iron alloy. The usual method is to build the core from stacks of sheet iron (*laminations*) of the proper shape - a shape of the letter "E" is common with single-phase power - with the open side of the E closed in with straight strips that are laid alternately with the E's. The magnetic permeability of the iron is important and the magnetic lines are carried around the coil in two directions. Iron oxide or another material provides the necessary insulation between the laminations. When the E-configuration is used, both coils are assembled over the center leg of the E. Fig. 13L4 illustrates this construction. When a "C" shape is used, separate coils are assembled on each side of the C. Coils are wound to the prescribed number of turns, first on semi-automatic machines that wrap the wire on bobbins or around mandrels of the proper size and shape. (See *inductors*.) The coil wire is insulated with a clear varnish and sometimes is square in cross-section. Protective insulating tape may be wrapped over the coils and between separate windings to provide protection and added insulation between core and windings or separate windings. The coils and laminations are then assembled together. Except for high mass-production transformers, lamination stacking and coil assembly to the laminations are manual operations, but some robotic handling has been employed. The end wires of the coils are stripped and connected to transformer terminals. The transformer is usually contained in a metal or plastic enclosure, and may be fully imbedded in a plastic material that adds insulation between windings of the coils and between the two coils. Larger power transformers are enclosed in a tank of oil that provides both insulation and cooling effect, especially if the oil is pumped to circulate. Transformers are most frequently found in power supplies for electrical and electronic equipment. They are also used extensively in audio and radio-frequency apparatus to transfer signals from one circuit to another, at the higher frequencies with an air core instead of magnetic laminations. In electronic circuits, many transformers have been replaced with transistor circuits.

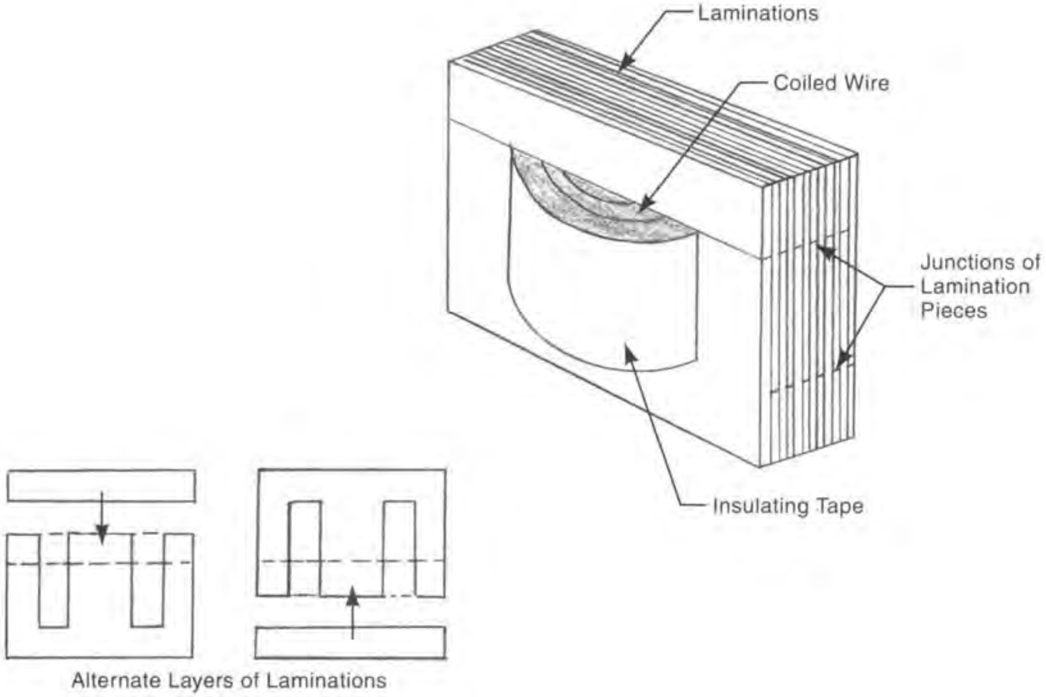

Fig. 13L4 A typical audio transformer before it is encapsulated.

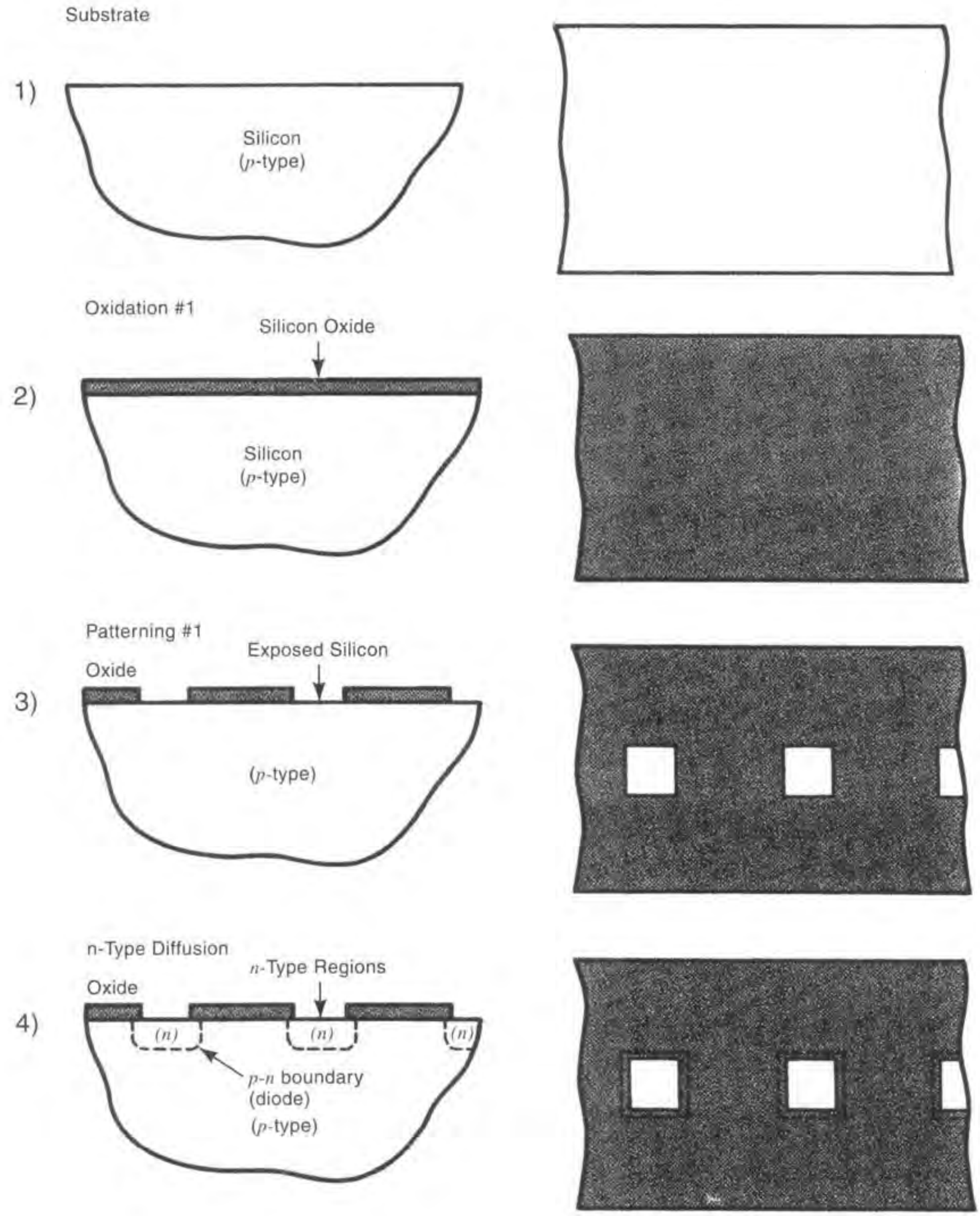

Fig. 13L5 The operation sequence for making a set of diodes. The sketches on the left represent cross-sections of the diodes as they are fabricated on a silicon substrate. The right hand sketches show the corresponding top views. Note that only a part of the substrate and its coatings are shown of the operation that produces a large quantity of diodes simultaneously. (*Reproduced with permission from Microlelectric Processing - An Introduction to the Manufacture of Integrated Circuits, by W. Scott Ruska, McGraw-Hill, 1987.*)

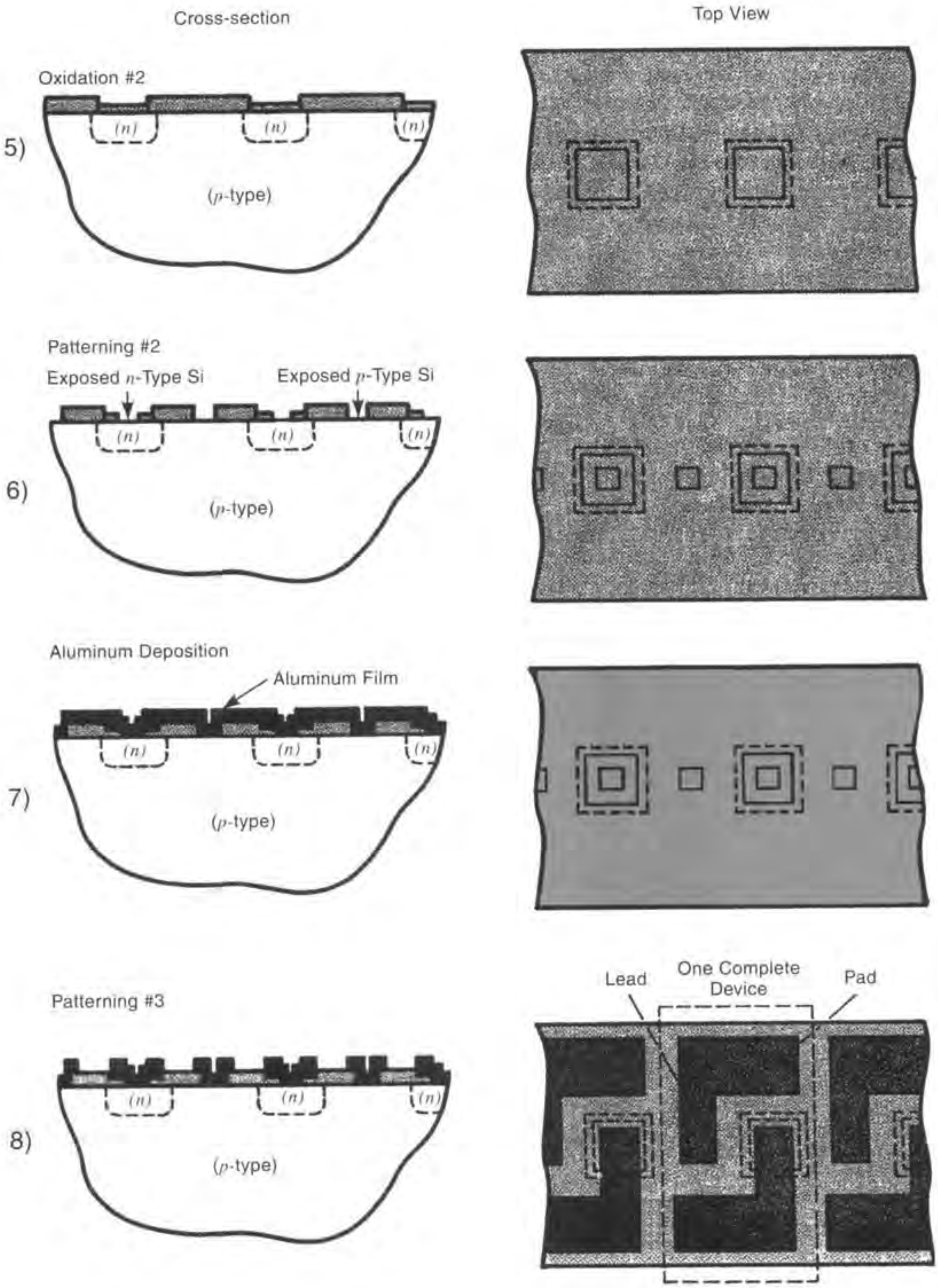

Fig. 13L5 *Continued*

L5. ***making discrete transistors and diodes*** - Transistors and diodes are solid-state electronic devices made from single-crystal semiconductor materials, usually silicon or other semiconductor materials containing gallium, aluminum, and arsenic. These devices are made with the same techniques used in the manufacture of integrated circuits as described above. Layers of silicon dioxide are grown. Layers of other materials are vapor deposited. Openings are made in the layers by photolithographic techniques and etching. Entire silicon layers and exposed areas are doped with impurities to establish the way electric current will flow. Open areas are doped by either diffusion or ion-implantation methods. Deposits of conductor, semiconductor, or dielectric layers, are limited by photolithographic techniques or by printing or stencilling methods. One difference between integrated circuit device manufacture and discrete device manufacture, however, is that the discrete transistors are found in applications where the electrical current and voltage levels may be higher and where larger circuit elements are needed to conduct the current. Additionally, the extremely small size of devices in integrated circuits is not normally required for discrete devices. Like integrated circuits, discrete transistors and diodes are made on wafers, are tested, cut from the wafer, are connected to terminals and assembled in a protective metal, ceramic, glass, or plastic package. The package is provided with external leads, pads, or other terminals for connection to the circuit where it is used. Fig. 13L5 illustrates the manufacturing sequence for production of discrete diodes, the operations for which are the same as for transistors except that diodes are inherently simpler, having two major components (base-collector or emitter-base) instead of three (base-emitter-collector).

M. Conformal Coatings

Conformal coatings are applied to an entire printed circuit board after all traces and devices on the board are soldered. The coatings provide protection to the circuits from the contaminating effects of moisture, perspiration, dust, and ambient atmospheres. Most such coatings can be penetrated for repair soldering if that should be necessary at some point. The coating is applied after the post-soldering flux removal and cleaning to preserve the clean state of the board. The application method is vapor deposition, spraying, dipping, or brushing.

N. Other Chip Configurations

N1. ***multiple integrated circuit packages (multichip devices, assemblies, modules [MCM], system in a package (SIP) or packages)*** - involve the assembly, in one protective package, of several integrated circuit chips (unpackaged) and, optionally, some other components connected on one substrate. This type of package is used when high speed of operation of the circuit is important. Normal connections from chips to other devices and board circuits exhibit capacitance effects that slow the rate of current flow. By putting several interconnected chips in one package, and on one common substrate, the connecting paths between them are made much shorter and the operations of the chips can be faster. Higher frequencies, better performance, and a more compact arrangement are also achieved. The cost, however, is higher than if the chips were mounted in individual packages on a circuit board. Connecting circuits are made using thin or thick films of metal or other conductive materials. This wiring is put on the ceramic or silicon substrate by using the additive method (described in A1c above) to produce a multilayer substrate. Resistors and capacitors may be formed and connected to the chips as well. As many as five chips may be included in the module. These are usually mounted on the substrate with an epoxy adhesive. The conductive films employed may be made from titanium, palladium, tantalum nitride, and electroplated gold. Electrical connections are made by wire bonding. The final package, containing both substrate and chips, may consist of a sealed metal, ceramic, or silicon rubber capsule, with external leads for connection to the circuit board. Fig. 13K5, view c, shows a simple arrangement of two chips.

References

1. *ASM Electronic Materials Handbook, Vol. 1,* ASM International, Materials Park, OH, 1989.
2. *Soldering Handbook for Printed Circuits and Surface Mounting, 2nd ed.,* Howard H. Manko, Chapman and Hall, NY, 1995, ISBN 0-442-01206-3.
3. *Solders and Soldering, 3rd ed.,* Howard H. Manko, McGraw-Hill, NY, 1992, ISBN 0-07-039970-0.
4. *Solder Paste Technology,* Principles and Applications, Colin C. Johnson and Joseph Kevra, TAB Professional and Reference Books, Blue Ridge Summit, PA, 1989, ISBN 0-8206-3203-4.
5. *Microelectric Processing—An Introduction to the Manufacture of Integrated Circuits,* W. Scott Ruska, McGraw-Hill, New York, 1987, ISBN 0-07-054280-5.
6. *Solders and Soldering, 4th ed.* Howard H. Manko, McGraw-Hill, NY, 2001, ISBN 0-07-134417-9.
7. *Handbook of Printed Circuit Board Manufacturing,* Raymond H. Clark, Van Nostrand Reinhold Co., New York, 1985.
8. *Printed Circuit Basics—Michael Flatt,* Miller Freeman, San Francisco, 1992.
9. *McGraw-Hill Encyclopedia of Science and Technology, Vol. 9,* McGraw-Hill, New York, 2002.
10. *Encyclopedia Britannica,* 2002.
11. *Academic American Encyclopedia,* 1998.
12. *Microchip Fabrication, 4th ed.*—Peter Van Zant, McGraw-Hill, NY, 2000, ISBN 0-07-135636-3.
13. *Processing Difficult Lead-free Boards,* paper by Alan Rae, VP Technology, Cookson Electronics.
14. *Electronic Components,* Victor Meeldijk, John Wiley, New York, 1996.

Chapter 14 - Advanced Manufacturing Methods

A. Rapid Prototyping (RP) Methods

Rapid prototyping is a means of producing component parts or accurate replicas of them in a short lead time. These parts are made with special automatic non-traditional fabrication methods from sophisticated computerized designs, without the use of special dies, molds, jigs or other tooling. All common rapid prototyping methods build the parts with a layer-by-layer approach, under computer control. Parts thus made can be tested and evaluated much sooner than would be possible if traditional production methods were employed.

Rapid fabrication methods can be placed in one of three basic categories, depending on the form of material used: liquid-based systems, solid-based systems and powder-based systems. Regardless of the specific process used, there are six major steps in the process for rapid prototypes: 1) The component is designed using a CAD (Computer Aided Design) program with 3D modeling capability. 2) The design data are converted to the STL ("Stereo lithography") or similar format. The data are transmitted to the shop-floor computer that controls the rapid prototyping machine. 3) The design data are transformed in the shop computer to represent a series of "slices" of the solid model. 4) The shop-floor computer converts the design data into operating instructions for the rapid prototyping machine. 5) The prototype part is fabricated by the machine and, 6) Necessary post-processing operations are performed. This sequence is summarized in Fig. 14A.

Rapid prototypes have the following uses: 1) as visual concept models - to visualize and verify appearance, fit and design features. 2) as casting patterns. Wax or plastic prototypes can be used as patterns for the manufacture of investment, plaster or sand-mold cast metal prototypes. 3) for use as

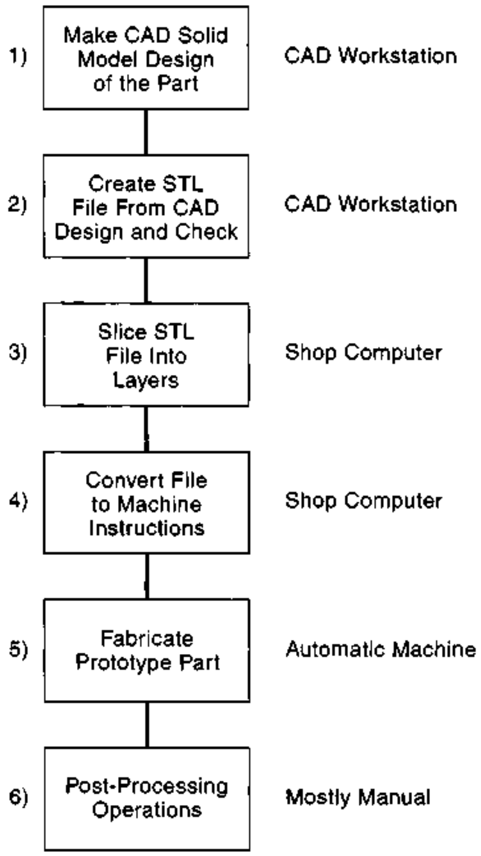

Fig. 14A A typical operation sequence for a rapid prototype part, made by any of a number of RP methods.

patterns for producing non-consumable short-run tooling of epoxy, rubber or other materials for plastic molding of prototypes or short-run production parts. 4) as functional prototypes. Sometimes, rapid prototypes can be made sufficiently strong that they can be used in operational testing of the product that uses the part.

A1. ***initial step: computer aided design (CAD)*** - Rapid prototyping begins with a computer aided design (CAD) of the part to be made. The design must incorporate an advanced 3D geometrical solid modeling of the part, though some surface model files can be used. The CAD file for the design must define a fully enclosed volume. Outside and inside surfaces and boundaries must be completely specified. This level of CAD data for the part to be made is a prerequisite for all rapid prototyping systems.

A2. ***the STL file*** - Another computer program converts the solid model data to an STL (as in stereolithography) or similar file. The STL file processes the CAD data and converts it to a description of the surfaces of the part as a series of triangles. The triangles approximate surfaces that have curvature by using many small triangular facets at slight angles to each other. The x, y and z coordinates for each vertex of each triangle are part of the file. There is also an indication of the direction of a perpendicular line to each triangular surface. (This indication positively differentiates the outside and inside surfaces of the part.) The complex procedures of designing a solid model and expressing the surface as a series of triangles are subject to some human and system errors. Common practice is to check the STL file carefully for gaps, cracks, holes, and other defects in the part's surface, because faults must be eliminated before a satisfactory prototype can be made. Checking is done manually, usually with the assistance of a special program developed to assist the operation. Any necessary corrections are then made. The STL format is the most frequently used format for rapid prototyping and has become a de facto standard. Some systems, however, use other formats. IGES (Initial Graphics Exchange Specifications) uses more complex algorithms to define surfaces but it provides a precise representation of their geometry. Several other formats, including SLC (Stereolithography Contour), are used in some RP systems.

A3. ***the SLI file*** - is usually created in the shop computer, the one that controls the rapid prototyping equipment on the factory floor. The shop-computer program takes the STL data and divides it to portray the part as a series of horizontal slices from 0.001 to 0.020 in (0.025 to 0.50 mm) in thickness. This is the SLI (for SLIce) file. The layers it represents, when stacked together in the proper sequence, very closely follow the shape of the prototype part. All the common RP systems use this layer-additive approach in making prototype parts. The thinner the slices in the program and the greater the number of layers in the prototype, the more closely it describes the shape of the part and the smoother the surface it produces.

A4. *liquid-based rapid prototyping systems*

A4a. ***the stereolithography (SLA) system*** - The use of this system requires a 3-dimensional CAD solid model file for the part to be produced and the use of the STL program to prepare a file for the part, as discussed above. Then, a shop-floor computer, the control computer for the stereolithography machine, checks and verifies the correctness of the data. The computer then creates an SLI file which slices the model into a series of horizontal cross sections from 0.004 to 0.020 in (0.10 to 0.50 mm) thick, puts the slices in a graphical form that permits them to be visually verified by the designer or machine operator, and, most important, puts the data in a form that operates and controls the SLA machine.

The process involves the solidification of a liquid plastic resin, a photopolymer, through polymerization caused by focused laser radiation. The molecules of the resin, a monomer, link together with the aid of the laser energy and change to a solid polymer. The laser beam is actuated and moved by computer control based on the data in the CAD, STL and SLI files. The operation takes place in a tank containing the liquid and a supporting table for the prototype. The height of the supporting table can be controlled accurately. The operation starts with the fabrication of special supports for the part involved. The supports are usually needed to hold portions of the part being fabricated before it is substantial enough to support itself or hold itself together. The table and supporting surfaces are placed just below the surface of the liquid resin as the process begins. A leveling wiper moves across the table to ensure that there is a complete thin coating of liquid photopolymer. The laser beam scans the liquid surface in accordance with a computer-programmed path, changing the surface resin from a liquid to a solid. The focused laser spot is usually about 0.008 in (200 microns) in diameter. The beam is moved with mirrors so that all points to be solidified are exposed to the laser. The first solidified material becomes the bottom layer of the prototype. After the first layer is complete, the support surfaces are lowered slightly and become covered with another layer of photopolymer. The leveling wiper again transverses across the surface. The laser traces a path of radiation to solidify the next layer. The process continues, solidifying the liquid, layer by layer, to create, from the bottom up, a solid plastic prototype part. Fig. 14A4a illustrates the process schematically.

Postprocessing operations follow fabrication of the complete prototype part. There are three basic operations: 1) final curing of the photopolymer resin, 2) separation of the part from any support structure and 3) any miscellaneous finishing operations that may be required. The final curing involves placement of the workpiece in post-cure apparatus that bathes the workpiece in ultraviolet radiation. This thoroughly cures the resin to full strength, completing any cross-linking that was not accomplished by the laser beam. This operation may take one hour. The next step is to remove any supports that were needed during the layering. This is usually done manually. The third step is to carry out any surface finishing or refinement operations that may be needed. These operations include sanding, glass bead blasting, polishing, electroplating or painting as appropriate and drilling, milling or thread tapping, if required.

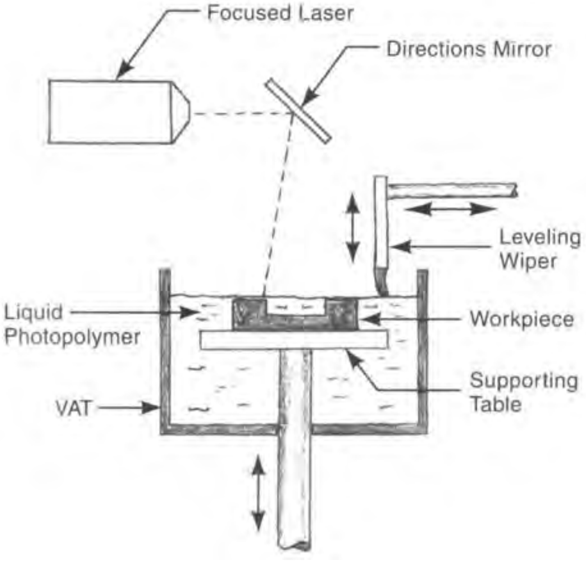

Fig. 14A4a The stereolithography process (SLA). Liquid photopolymer is polymerized by a laser beam in the areas that delineate a horizontal slice of the prototype part to be made. The worktable is lowered, more liquid photopolymer is wiped onto the workpiece and the process is repeated, layer (slice) by layer, until the prototype is completed.

A4b. ***QuickCast*** - is an RP method for making cast metal prototypes. The first step uses epoxy resins in a stereolithographic process similar to that described above. However, instead of acting as the sample part itself, the prototype is used as a pattern in casting a metal prototype. Casting is by the investment casting process. (The investment casting process is described in items G, G1 and G2 of Chapter 1). Patterns made by SL in QuickCast have a "quasi-hollow" structure, i.e., they are hollow except for a light internal structure inside the thin, external shell. This structure provides sufficient stiffness to the pattern and promotes its better accuracy. The hollow spaces lessen the stresses and distortion of the part due to the shrinkage that occurs during polymerization. They also greatly reduce the amount of thermal expansion of the pattern that takes place later, when the ceramic investment casting mold is heated. This expansion would otherwise cause the ceramic mold to crack, rendering it unusable.

After the pattern is formed, it emerges from the SL equipment filled with liquid resin in the spaces between structural members. The part is then placed where the liquid resin can drain. To allow this resin to escape from each internal cell, a special hatch arrangement was developed for the reinforcement structure. The pattern then undergoes posttreatment. This includes removal of any attached support structure, filling any pinholes in its surface, and filling the openings from which the resin has drained. Oven postcuring then takes place to ensure that all the material is fully polymerized. The investment casting process then can proceed, using the shell mold method. If not incorporated in the pattern, material to form sprue and runners is added. The pattern is then coated with or dipped into a slurry of finely-ground ceramic material that is then dried thoroughly. Dipping and drying are repeated through a total of about 6 or 7 cycles to build up a coating of the necessary thickness. The mold is then heated to a high temperature to burn out the pattern and fuse the ceramic of the mold. Molten metal is poured into the mold and allowed to cool and solidify. After the casting solidifies, the ceramic mold is broken away from the cast part, the casting is cleaned of loose ceramic, sprues and runners are removed and other post casting refinements may be carried out. The resulting part is a metal prototype of the CAD design, suitable for functional, environmental and life testing as well as for testing of fit with mating parts and testing of strength, appearance, and all the other properties it requires. A wide variety of ferrous and non-ferrous metals can be cast. The process utilizes epoxy polymers that have been developed to minimize shrinkage during polymerization and distortions afterwards due to creep.

The QuckCast process is used as a rapid tooling method if the patterns made are those of mold halves instead of a prototype part. The two cast-metal mold halves then can be put together and used to injection mold prototype (and production) parts in whatever plastic material is specified for the part. See *Rapid Tooling* below.

A4c. ***solid ground curing (SGC)*** - is another process that uses liquid photopolymer resins but it does not use laser energy to effect polymerization. Instead, it creates a temporary photomask for each layer using a process similar to xerography. In the process, black toner powder is held on a glass plate in areas of the plate that have been electrostatically charged by an ionographic process. (Where the plate is not charged, the toner is easily removed; where it is charged, the toner is retained.) The photomask then is carefully aligned with the workpiece location and used to direct ultraviolet radiation from a high-powered, collimated UV lamp to a layer of liquid photopolymer resin. The radiation cures the polymer in all exposed areas but not in areas blacked out on the photomask. An airknife then removes the uncured liquid resin. The curing step is followed by application of a coating of molten wax to the entire surface but primarily in areas surrounding or open between cured resin areas. The wax supplies support for the prototype, including outlying features, as it is being fabricated. A cooling plate descends on the wax to cool and solidify it and, when the plate is removed, a mechanical face milling cutter passes across the surface and removes excess polymer and wax to provide a flat surface of exactly the correct thickness. (The hardened polymer layer, before machining, is thicker than the final desired thickness.) A vacuum cleaner removes the chips created by the machining. The elevator mechanism then lowers the workpiece slightly below the surface of liquid photopolymer, causing it to be covered again with the liquid. The process of making a photomask, coating the surface with liquid polymer, removing excess, curing the polymer, coating with wax, cooling, machining, and vacuuming it, follows for the next layer. Layers are added until the prototype is completely formed.

The SGC process begins, as with other RP systems, with a CAD model of the part to be made. As with other systems, the CAD data is put into the STL or another similar format and is "sliced" after transmittal to the RP machine's computer. The computer software, in this case, is the manufacturer's DFE (for Digital Front End) program. The program guides the ionographic process, using electrostatic toner, to prepare the mask plate for each layer of the part. When each use of the mask is completed, the electrostatic toner is removed and the glass plate is reused for the next layer. After the mas-making and layering processes are complete for all layers of the prototype part, the finished prototype is removed from the machine. The prototype is surrounded by wax that must be removed. This is done with a high-temperature wash of water and citric acid. A disadvantage of SGC is that it requires the presence of a full-time operator. An advantage of the process is that multiple prototypes can be made simultaneously in the same operation, so long as there is room in the equipment. The capacity of current units is 71 in wide × 165 in long × 114 in high (1.8 × 4.2 × 2.9 m high). Fig. 14A4c illustrates the process sequence.

The process is being used to make patterns for investment casting metal prototypes, for short-run injection molding of plastic parts in silicon rubber, epoxy, or other molds, as well as for making plastic prototypes.

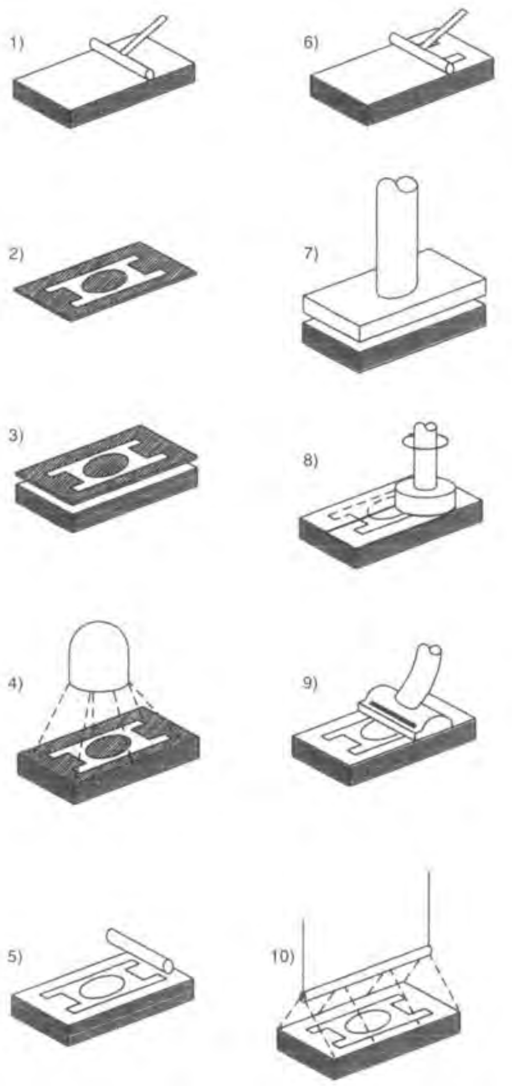

Fig. 14A4c The process sequence for the Solid Ground Curing process (SGC):
1) A coating of liquid photopolymer is applied to the workpiece surface. 2) A glass photomask is made for the next workpiece layer. 3) The photomask is aligned with the workpiece. 4) Collimated ultraviolet light is shined on the workpiece through the mask. 5) Uncured resin is blown away with an airknife. 6) The workpiece is coated with liquid wax. 7) The wax is solidified with the aid of a cooling plate. 8) The surface of the workpiece is machined flat with a face milling cutter. 9) A vacuum cleaner removes loose chips and the workpiece is lowered slightly. 10) Final curing takes place with the aid of another ultraviolet light. The process sequence is repeated for each layer of the prototype workpiece until it is fully formed.

A4d. ***solid creation system (SCS)*** - has been developed in Japan and is used mostly there. It employs an operation sequence very similar to that involved in stereolithography: 1) develop a CAD model (normally solid) of the part to be made, 2) slice the CAD design into layers and generate supports needed, 3) with an ultra-violet laser, scan the surface of a liquid photopolymer to polymerize and solidify a liquid resin, 4) lower the solidified material slightly, 5) repeat the laser scanning and table lowering for each layer of the part, 6) when all layers are completed, carry out post-processing. This includes removal of support structures and, usually, post curing of the resin to ensure full polymerization.

A4e. ***solid object ultraviolet-laser printer (SOUP)*** - has the same basic sequence as SCS except that the laser beam is moved and focused by a galvanometer mirror. This arrangement provides faster scanning and faster production. Proprietary software is used for slicing and generating supporting structures, as needed. Epoxy resin is used. This method is used in Japan to make evaluation prototypes and patterns for casting.

A4f. ***soliform system*** by Teijin Seiki - is also similar to stereolithography (SLA), using an acrylic-urethane liquid resin. The main application has been to make short-run, low- cost, tooling by using the prototype to cast molds of metal-bearing epoxy, or of low-temperature-fuse metal. These molds have been used for injection molding, casting, or vacuum forming of parts in other plastics. ABS, polypropylene, and polycarbonate parts have been made from such tooling.

A4g. ***MEIKO system*** - was developed for prototyping of jewelry and other parts of a similar small size. It uses conventional liquid resin processing, similar to stereolithography, but with proprietary CAD and CAM programs, particularly adapted to typical sizes and shapes of precious metal rings and related items. An x-y plotter system is used to direct the laser solidification process. The photopolymer prototypes are used for design evaluation and as patterns for investment casting of production products.

A4h. ***E-Darts system*** - is a low-priced system that operates on Windows computers and can make rapid prototypes of a small size - within an 8 × 8 × 8 in (20 × 20 × 20 cm) tank. Its forming method is similar to stereolithography. A unique feature of the system is that the bottom of the tank containing liquid photopolymer is transparent. The laser beam originates below the tank and is aimed upward through the tank bottom to the liquid resin. The prototype is formed on the underside of the machine's base which moves upward as each layer is completed.

A5. *solid-based systems*

A5a. ***laminated object manufacturing (LOM)*** - as the name indicates, uses sheets of thin material of varying shapes, stacked together, to create an object with a three dimensional shape. The outline of each layer is first cut with a CO_2 laser operating at an infrared wavelength. Then the sheet layer is bonded to previous layers with a temperature and pressure-sensitive adhesive. As the sheets are stacked, the full three-dimensional shape of the part emerges.

As with other RP processes, the operation sequence for LOM begins with a CAD model design of the part and an STL computer file. The slices are delineated by a software program, LOMSlice, which also controls the operation of the equipment. The computer file includes outline shapes and dimensions for each layer. Fig. 14A5a illustrates the operation. The material (normally paper with adhesive coating) is fed to the work area from a continuous feed roller. The layers are cut from the sheet stock by the laser under computer control with an X-Y positioning system for the laser beam. The cut piece, and a cut surrounding sheet, are both bonded to the existing laminated stack with the aid of a heated cylinder that rolls with pressure across the stack of sheets. The sheets surrounding the part at each layer form the support structure for temporarily-separated or weakly-supported parts of the prototype. The mounting platform descends a small amount with each layer to accommodate the additional thickness of the stack. The unwanted sheet material, outside the outlines of the part, is removed after the part has been built up. To aid in its removal, the unwanted material is diced (cut into small pieces) by the laser after each layer is laid on the stack. After the last sheet is laminated, the material is removed from the platform.

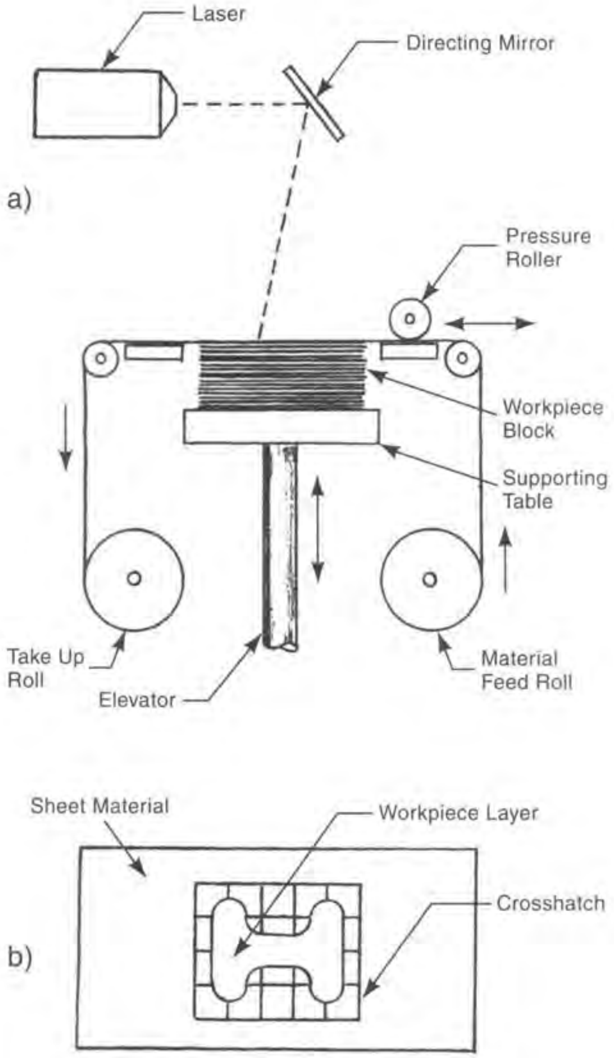

Fig. 14A5a Schematic illustration of Laminated Object Manufacturing (LOM). View a) shows the equipment in operation, where adhesive-coated sheet material is fed to the machine on which the outline of the workpiece is cut. A pressure roller presses each layer against the stack and the sheet material advances for the next layer. The elevator lowers the supporting table slightly as each layer is added. When the final layer is completed, a solid block of material containing the workpiece (prototype part) can be removed from the machine. View b) shows one layer with the outline of the workpiece cut in the sheet by a laser, and cross-hatching around the workpiece. The cross-hatching makes it easier to remove the supporting material that surrounds the finished prototype.

The material, at that point, is in the form of a rectangular block with the part inside. The surrounding material can be removed manually with the aid of a hammer, putty knife and wood carving tools. Other post processing operations may include: sanding, polishing, painting, and sealing with a urethane, epoxy, or silicon spray.[2] Machining operations such as drilling, turning, or milling, may be performed if necessary.

In addition to paper, the laminations can be made from plastics, metals, composites and ceramics. Paper is least expensive and, when laminated, has properties similar to those of plywood. A major application of the LOM method is the fabrication of foundry patterns for sand-mold-cast or investment-cast parts. The LOM patterns look very much like the wood patterns used in the foundry industry. They are also used to make short-run injection molds of silicone rubber or sprayed-on metal. These prototypes also are employed in the design verification functions now common for various kinds of rapid prototypes. LOM-made dies are also used as thermoforming molds for modest-quantity production. LOM can also be used to make patterns of two-part mold halves, similar to the method described above for the QuickCast system. These patterns then can be used to make investment cast molds for production of the part involved, or can be used directly for low-pressure injection molding of a limited quantity of parts.

A5b. ***fused deposition modeling (FDM)*** - uses a thermoplastic as the raw material. The material is heated in a dispensing head to just above its melting temperature and is extruded as a thin ribbon which is deposited on the work surface, and then on a previously deposited layer, in a computer-controlled pattern. The discharge head moves in X and Y directions to cover the entire layer to be deposited. The dispensing is started and stopped as needed to meet the design of the part being produced. The material, after being deposited, quickly cools and solidifies, forming a hardened layer. Previous layers are maintained at a temperature just below, but very near, the melting point of the material so that there is good adhesion with the next layer deposited. The work surface is lowered slightly after each layer so that the discharge nozzle has a constant spacing relative to the existing surface. Typical layer thicknesses are 0.005 to 0.014 in (0.13 to 0.35 mm). Layer thickness is changed by changing the delivery speed of the discharge head. The ribbon width can range from about 0.010 to 0.040 in (0.25 to 1 mm). If supports are needed to hold the prototype while it is in process, the operating program for the FDM equipment designs and generates them as part of the deposition process, using wax from a second computer-controlled dispensing head as the supporting material. Layers are added until the workpiece is completely formed. Then the workpiece is removed from the equipment and the supporting wax structures are separated from the prototype part. The process can be used with polyethylene, polypropylene, polyamide, ABS, MABS (methyl-methacrylate acrylonitrile butadiene styrene), and investment casting grade wax materials.

The process may not be suitable for producing fine holes in prototypes and surface irregularities may result if the discharge head is stopped. Shrinkage occurs as the deposited plastic material solidifies and this may cause some distortion. ABS prototypes can be made with near the strength of injection molded parts so that they can be tested as functional parts. Fig. 14A5b illustrates the FDM process schematically.

A5c. ***paper lamination technology (PLT)*** - is similar to LOM, but no laser is used to cut the paper layers. Instead, a computer-controlled

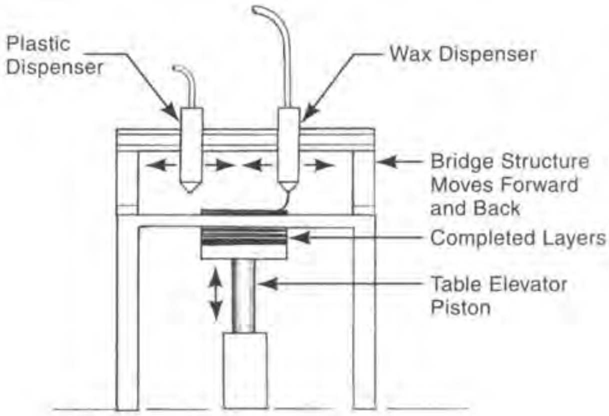

Fig. 14A5b. Fused Deposition Modeling (FDM) shown schematically. A dispensing head extrudes a thin ribbon of thermoplastic in a computer-controlled pattern to create one layer of a prototype. Another dispenser extrudes wax for any necessary supporting structure.

mechanical cutter is used. The process has six steps after the CAD design model, slicing data and machine instructions are completed: 1) print the shape of the layer on paper with plastic resin powder. The printing process is similar to Xerography; 2) align and hot-press the paper on the work surface or on the stack of previous sheets; 3) cut the top sheet to the correct outline; 4) repeat steps 1 through 3 until the full height of the prototype is achieved; 5) remove supporting and unneeded portions of the stack; 6) post-process the workpiece by sanding, cutting or coating as necessary for the surface, shape and application needed. The PLT process has been used in Japan primarily for conceptual modeling.

A5d. ***multi-jet modeling (MJM)*** - is a system that applies wax or thermoplastic material with a method similar to ink-jet computer printing. The printing head dispenses the heated plastic from up to several hundred individual jets at one time. It moves in X and Y directions to cover the full surface of each layer of the prototype, but chiefly in the x direction because the printing head is 8 in (20 cm) wide. The deposited plastic cools and solidifies, forming a layer of the prototype. After each layer, the work surface is lowered and the next layer is deposited. The system operates from proprietary software and is designed for use by engineers for checking design concepts early in the design sequence. The process is quick, clean, automatic and suitable for use in engineering offices. It is illustrated schematically in Fig. 14A5d.

A5e. ***ModelMaker and PatternMaster*** - are two other systems that use ink-jet-like application of thermoplastics to provide concept-verification prototypes early in the design process. Two print heads are employed, one with a thermoplastic, the other with wax. A cutter passes over each finished layer to provide a planar surface, and controlled-layer thickness before the next layer is applied.

A5f. ***slicing solid manufacturing (SSM), melted extrusion modeling (MEM) and multi-functional RPM systems (M-RPM)*** - are Chinese-developed systems and equipment. SSM is similar to LOM, using laser cutting to provide the shape of each layer. The MEM method is similar to FDM. The M-RPM system provides both methods on one machine base, and it can produce prototypes from either layers of sheets or from extrusion of a thermoplastic or wax filament.

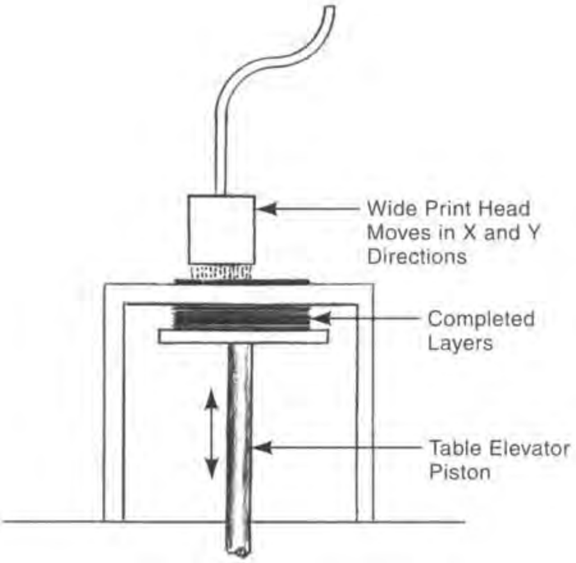

Fig. 14A5d The Multi-Jet Modeling (MJM) system shown schematically. A wide print head, similar to those used on ink-jet printers but considerably wider, moves in x and y directions and deposits wax or thermoplastic material in layers to create a prototype part.

A6. *powder-based systems*

A6a. ***selective laser sintering (SLS)*** - uses the energy of a high-power CO_2 laser to selectively fuse particles of powder together. Layers of fused powder are deposited on previous layers to create a part of the desired size and shape. The process is therefore, layer-additive, but it differs from stereolithography primarily in that the starting material is a solid, in powder form, instead of a liquid. The process starts with a CAD modeling design of the part and, as in stereolithography, this design is converted into STL files, which are then delineated as slices of the prototype part. The SLS equipment deposits powder on the work surface and, with a roller, spreads, smooths, and levels the deposit to the correct thin layer. Then, the focused CO_2 laser beam, directed and moved by a pair of mirrors, traces the outline of the part and applies energy to heat the powdered plastic to the fusion point.

The powder is also heated beforehand and maintained at a temperature just below the fusion point, so that the energy load on the laser is minimized. The laser operation takes place in a nitrogen atmosphere to avoid an explosion or combustion hazard with the powder and oxygen contamination of the bonding. Powder that is not sintered is left in place to act as a support for those portions of the workpiece that require it. The elevator then descends slightly. The operation of spreading and sintering the plastic powder is repeated, layer-by-layer until the entire part is completed. Materials used for the operation include PVC (polyvinyl chloride), a thermoplastic elastomer, polycarbonate, nylon, wax, phenolic coated ceramic (for sand casting molds and cores) and plastic coated metal powders.

The surface of SLS prototypes can be quite rough, due to the nature of the process. One factor, with amorphous materials (PVC and polycarbonate) is that powder particles adhere at their points of contact, leaving openings at other points between the particles. These openings also result in densities sometimes considerably less than those that would have resulted from regular molding of parts in the same material. The strength of the prototypes is correspondingly reduced. Prototypes made with the crystalline materials (nylon and wax) do not have this problem, but have the disadvantage of greater shrinkage during solidification and corresponding distortion, if the shape of the part is complex.

When the part is finished and removed from the equipment, it is accompanied by a surrounding cake of powder which must be removed. (The powder cake has an advantageous supporting effect on the prototype as it is formed, but some additional supporting structure may be required, in some cases, as in stereolithography.) Removal of the powder cake is done manually with hand tools: spatulas, dental-like tools, brushes and air nozzles.[1] The surface is then often sanded and may be coated with wax or another material to provide a smoother surface.

SLS prototypes can be used for limited functional testing, as patterns for investment casting and, with metal-based powders or resin-coated sand, the workpiece can be a mold rather than a prototype part. The mold, if made from metal-based powders, may be used for limited or moderate production of plastic parts. When resin-coated sand is used, the workpiece produced is also a mold. The process bonds the sand grains together to produce a sand mold which is used for casting the metal prototype part. Fig. 14A6a illustrates selective layer sintering schematically.

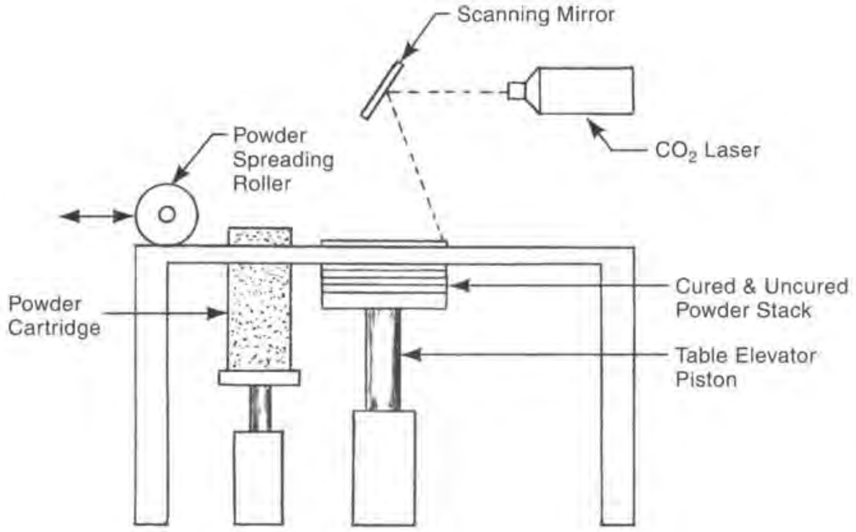

Fig. 14A6a Selective Layer Sintering (SLS) shown schematically. The operation takes place in a nitrogen atmosphere.

A6b. ***EOSINT*** - is a European-developed system similar to SLS described above. With EOSINT, CAD design data are processed by proprietary software to convert them to the layer format that the company's machines use. Layers of powder are deposited and fused together by laser. A wide variety of powdered materials can be processed including polyamides of fine or coarse grain size – with or without glass filler – polystyrene, wax, bronze, steel, and phenolic-coated foundry sand. Available machines are dedicated to only one type of material. The process can be used to make concept or functional prototypes, casting patterns and, with metal powders as indicated below in B8, directly for tooling for injection molding of plastic parts.

A6c. ***three dimensional printing (3DP)*** - uses powder bonded with an adhesive solution that is dispensed from print heads similar to those used in computer ink-jet printers. The objective of the process is to produce inexpensive concept prototypes quickly. The powder used is either a starch-based or plaster-based material. This powder is spread to a uniform thickness on the 3DP machine's work surface. Then the binder solution is jetted onto the appropriate portions of the powder by four print heads. When each layer is completed, the machine table is lowered, another layer of powder is spread and the print heads apply adhesive again. This sequence continues until the full height of the prototype part is achieved. Excess uncured powder is then vacuumed off and the part is removed. To gain additional strength, the part may be dipped in wax or infiltrated with a liquid plastic resin. The prototype may be colored by using colored binders in the adhesive. Sanding and painting also may be done as postprocessing operations.

B. Rapid Tooling

Making "rapid tooling" usually involves the fabrication of injection molding dies by rapid prototyping methods plus some other operations. The dies are normally usable for only limited quantity production and have other limitations. However, they are suitable when quantities needed are modest but greater than common prototype amounts. Rapid tooling also may involve making dies for die casting, patterns for sand casting or forms for thermoforming sheet plastic parts. One of two basic approaches is used. The first is simply to make a master part by RP methods and then use that part as a pattern for making short run injection molds by one of several methods. The second approach is to use RP methods to make patterns of two mold halves for the part. These patterns then are used to make the two halves of an injection mold of steel or other metal by investment casting. The CAD design of the two mold halves (called "two-part negative tooling") is made automatically from the design of the part by software in the CAD computer. Then data for the mold halves rather than the part itself is fed to the RP-making equipment. The QuickCast system, described above, has been used to make production molds by this method. Fig. 14B outlines the steps involved in making metal molds using rapid prototyping methods. For lower-quantity injection molding production, "two-part negative molds" made of epoxy or LOM laminated material can be used, after post-fabrication finishing, directly as injection molds for wax or plastics of lower melting temperatures.

RP patterns of the part can also be used in casting a silicone rubber mold for the part. Silicone rubber molds are most suitable for casting plastics that are in liquid form when the mold is filled. These plastics are usually catalyzed thermosetting types. Another method, sometimes useful for short-run injection molding dies, is to spray or plate a metal coating on a prototype part and then support the thin metal form thus made with a back-up of epoxy or other material to make two mold halves. Another approach is to cast an epoxy mold from the prototype. These short-run molds can often be used for low-pressure injection molding of wax patterns or plastic parts if the shape is not too intricate.

In making injection molds, particularly those for high-production applications, steps must be taken to provide functions that are in addition to the simple reproduction of the part's contours. Dimensions must be precise so that the molded part can fit the space allocated to it in the product. Gaining the necessary precision in a rapid tool requires correct allowances for shrinkage of the RP material when it solidifies, for shrinkage of the mold material, metal or plastic, if it is cast, and for the shrinkage of the production part from the mold.

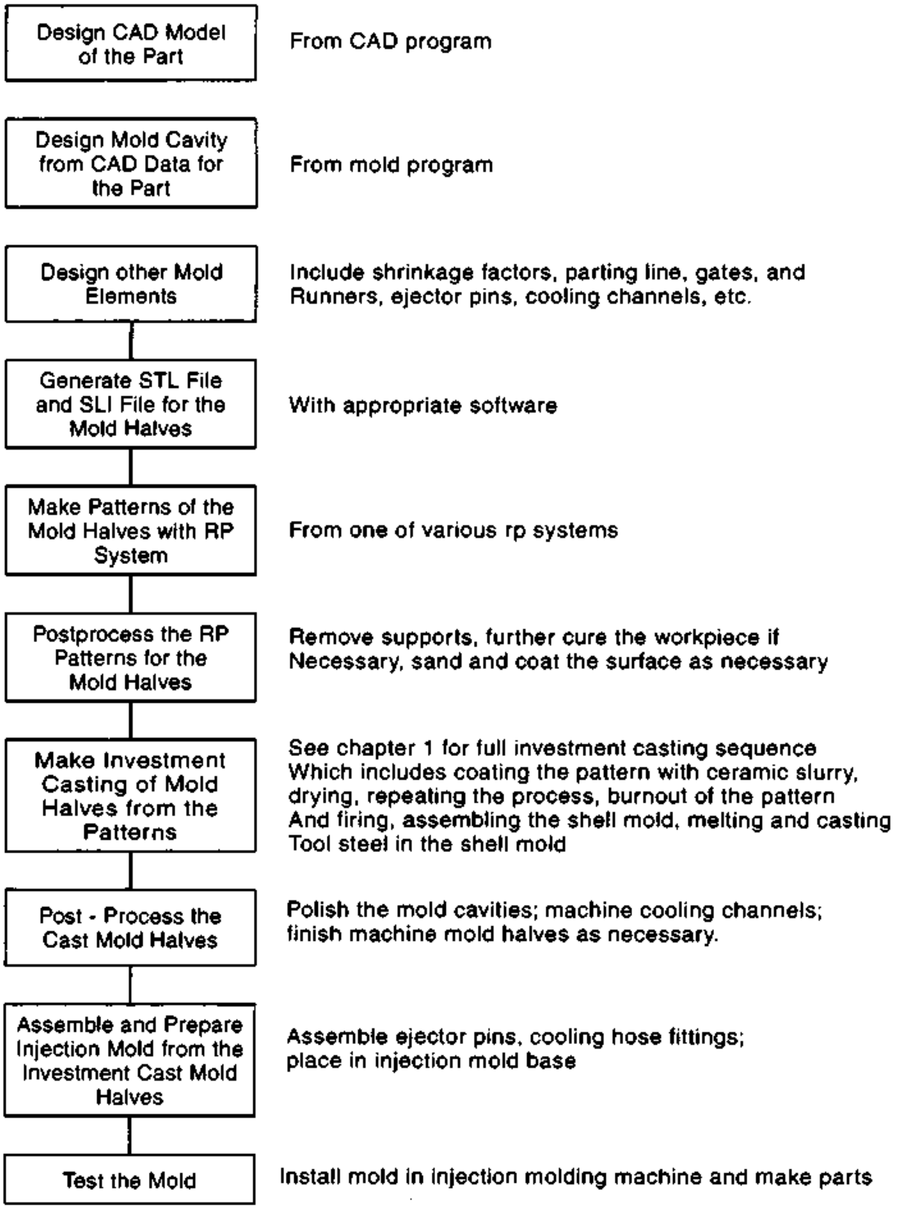

Fig. 14B The operation sequence for "rapid tooling" fabrication of metal molds for injection molding of plastics.

Fastening holes must match; the surface finish must be correct, especially if the part is an external, visible one; cooling channels, ejection pins, sprues and gates must be incorporated in the mold. Software, developed especially for rapid tooling use, can incorporate some of these features in the solid model for the mold but, even then, additional conventional machining and toolmaking operations are necessary. Some of these features can be skipped if the mold is for low production use and much slower production rates and manual mold handling and part handling can be tolerated.

The SLS process, described above in A6a, can be used to make a sand mold for casting a metal part, made by conventional foundry methods. Resin-coated sand is used as the working material with the CAD data reflecting the female mold shape for the part in question, In this approach, the tooling, the sand mold, is usable for only one part.

B1. ***direct shell production casting (DSPC)*** - produces ceramic molds for casting metal parts without the need for making patterns. The system includes software to convert a conventional CAD design of the part to a design for the mold cavities that will produce the part. Sprues, gates, runners and risers in the mold are part of the mold design. The mold is then made by the machine, which combines ceramic powder (fine aluminum oxide) with a colloidal silica binder in a layer-by-layer process. The alumina is spread on a work surface and leveled with a roller. A print head, similar to those used in ink-jet printing, deposits droplets of the binder from a series of jet openings on the print head to the appropriate places on the layer of ceramic powder. An additional layer of powder is spread and leveled, and more colloidal silica is selectively jetted onto it by the print head. When the process is completed, the workpiece is separated from the surrounding loose alumina powder and is post processed as necessary. It is then fired in a kiln. The DSPC process, illustrated in Fig. 14B1, is used exclusively for mold making.

B2. ***Prometal 3D printing process*** - uses steel powder and an ink-jet printed binding agent to make, layer by layer, a "green" powder metal part. The part is then furnace sintered and infiltrated with molten bronze in an infiltration furnace. The resulting part is then of full density. It is post-processed with any necessary machining, polishing and chromium or nickel plating. The process is used in making molds for injection molding and blow molding and dies for extrusion of plastics.

B3. ***RapidTool***[4] - is a method that forms injection molds from resin coated metal powder. A selective laser sintering process (SLS) (See A6a above) is

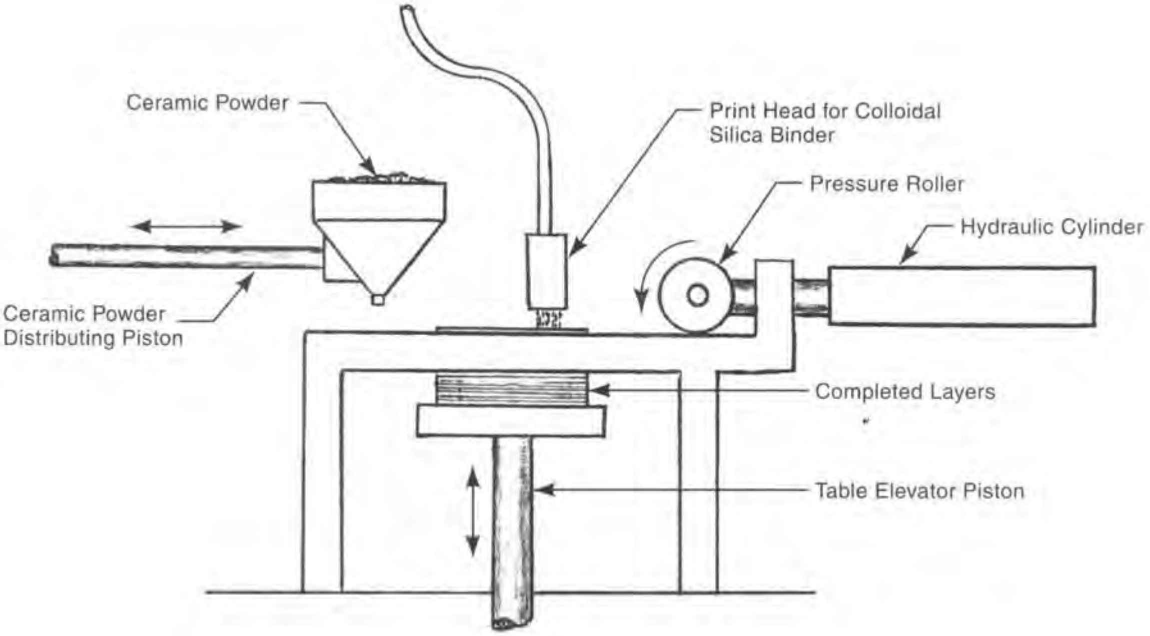

Fig. 14B1 A schematic representation of the DSPC process for making ceramic molds using rapid prototyping techniques. Ceramic powder, deposited in layers and roller pressed to be level, is bonded with colloidal silica. After all layers are completed, the mold halves are removed from the machine, loose powder is removed and the mold halves are fired in a kiln.

Next Page

used to bond the powder particles together into female mold halves. The mold halves are in a green state at this point and are then sintered and infiltrated with copper. The resulting mold is usable with conventional injection molding equipment and, although less durable than conventional hardened steel molds, can be used in moderate quantity production.

B4. ***laminated metal tooling*** - If the Laminated Object Method (LOM) (See A5a) is used with sheets of steel or another metal instead of paper or other non-metallic material, it can be used to form the halves of an injection molding die. The metal sheets are cut by laser, router or water jet, and are stacked and bonded or bolted.

B5. ***direct AIM***[4] - The stereolithography process, when used with a thermosetting plastic material and with CAD data for the female mold shape, can be used to make molds for injection molding other plastics. Such molds, however, are usable for only small quantity production and low injection pressures because of their lack of mechanical strength.

B6. ***SL composite tooling***[4] - is another system for making plastic molds for injection molding of plastics. The system differs from the Direct AIM method in that plain resin is used only for a thin shell of the mold cavity. This shell is backed up with epoxy plastic filled with aluminum powder and aluminum shot. The back-up materials provide increased mold strength and heat conductivity, both of which increase mold function and life.

B7. ***3D Keltool***[4] - is used to make solid injection molds from powdered steel. The process is lengthy, starting with a prototype part made by conventional stereolithography. The part is finished by sanding and polishing, and then is used as a pattern to cast a mold from liquid silicon rubber. This mold is then used to cast a silicon rubber replica of the part. This replica is then placed in a mold-size box that is then filled with powdered tool steel, coated with a binder material. The powder-binder mixture is cured and removed from the box as solid mold halves. The halves are sintered and infiltrated with 30% copper to fill voids between steel particles and can be finished for use as an injection mold.

B8. ***direct metal laser sintering (DMLS)***[4] - is an EOSINT process (See A6b) using metal powder and a laser of very high power. The laser sinters the metal particles together. Both bronze and steel alloys are used. The process has been used to produce mold inserts as well as metal parts.

C. Manufacturing Cells (Group Technology)(Family of Parts Concept)

The use of manufacturing cells represents a particular kind of factory layout for manufacturing equipment. The essence of the concept is that, when manufacturing a particular part or family of similar parts in substantial quantities, the equipment for successive operations on the part should be grouped together. The operator - or team of operators who make that part (or the family of parts) - operate all the equipment in the cell. This arrangement is in contrast to a more traditional factory layout that groups like equipment together in departments. Then parts move from department to department for each operation. The advantage of the cell layout is that lines of communication and transportation are made very short. The factory's through-put rate is speeded; work-in-process inventory is greatly reduced; when problems arise at one operation, their effect on subsequent operations is immediately recognized. Route sheets to control movement of parts through the factory are greatly simplified or not needed. Operators learn what is needed at each operation to avoid problems at subsequent operations and have the satisfaction of seeing the results of their efforts. Quality tends to improve. The disadvantage is that there is apt to be lesser utilization of some equipment. There is also the necessity of having operators learn the operation of several kinds of equipment rather than specializing in one type. The concept is illustrated in Fig. 14C for one particular family of machined parts. Fig. 14G8 shows a more advanced system where a robot does the handling between operations. When a circular layout is used, the robot can tend all machines in the cell.

Previous Page

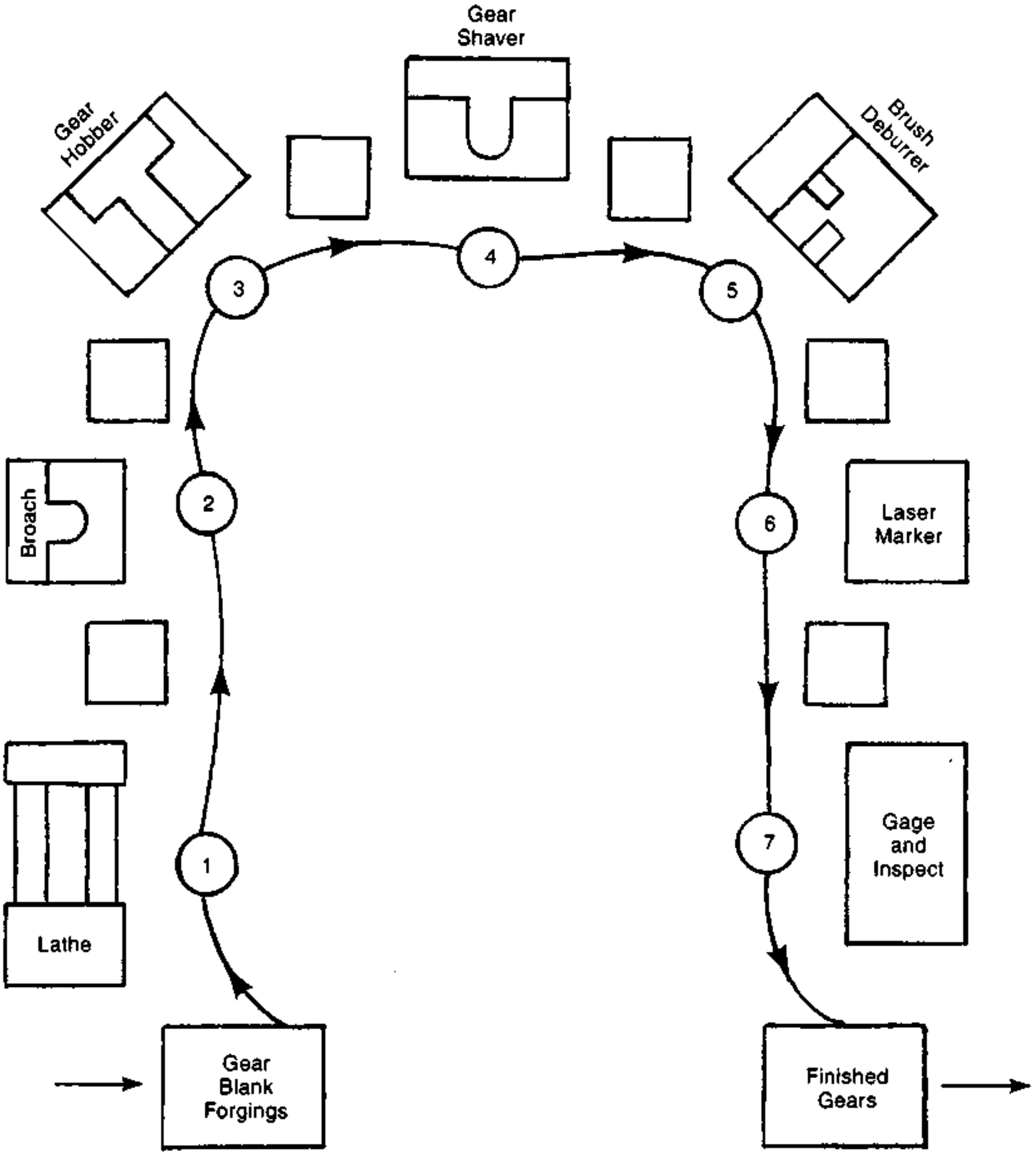

Fig. 14C The concept of a manufacturing cell illustrated with a cell arranged to make a family of spur gears of various pitches and diameters from forged blanks. This cell is shown with one operator for seven operations, based on the use of automatic equipment. A similar arrangement may be made using more operators and possibly duplicate machines for some workstations depending on the production level needed, and the operation time at each workstation. The gear blanks are first faced on both sides, turned, drilled and reamed at station one. At station 2, a keyway is broached in the center hole. At station 3, the gear teeth are hobbed and at station 4, they are finish shaved. Station 5 is a brush deburrer. At station 6, the gear is laser-marked to identify its model or part number, and with other descriptive data. At station 7, various gages and inspection devices are used to ensure that quality is of the prescribed level. The small tables between machines act as decouplers/Kanbans, containing small amounts of work-in-process, to illustrate which machines may need operator attention to maintain production flow. Ideally, these tables are empty and all work-in-process is undergoing machine operations.

D. Advanced Inspection Devices

D1. ***coordinate measuring machines (CMMs)*** - utilize diffraction gratings to gauge the position of a measuring probe with high accuracy. Typical systems include, in addition to the measuring machine, a sensing probe, a control and computing system and measuring software. Various kinds of probes may be used. The probe is moveable with very low friction because of nearly friction-free linear bearings in the machine. The workpiece to be measured is placed on the granite table and is then stationary. The electronic touch probe is guided to move around the workpiece and make contact with it where measurements are wanted. Probe movements can be in the x, y, or z direction. Movement of the probe can be manual, by CNC, or by a programmable controller. The readout console displays the position of the probe simultaneously in terms of the three coordinates. Different probe shapes can be used, depending on the element that is being measured. For example, if dimensions involving the center axes of holes are to be measured, a tapered plug is used as the probe. The measurement accuracy results from use of the moire' fringe pattern from two glass scales placed together on the machine at a slight angle from each other. The fringe pattern between the scales is detected by photocells and converted to electrical pulses. Measurement accuracies within 2 to 4 ten-thousandths of an inch in a span of 10 to 30 inches are common[5]. The probe is often mounted on a bridge-like structure, but may be cantilever mounted or fastened to an articulated arm. The machine is usually installed in a room in which temperature and humidity are controlled. Coordinate, profile, and angular measurements can be made. Some machines are equipped with more than one probe or with a machine vision device or laser scanner (see below), in addition to a contact probe. Such machines are referred to as *multisensor systems*. Fig. 14D1 illustrates a typical coordinate measuring machine.

Fig. 14D1 Dimensional inspection of a machine component with a coordinate measuring machine. *(Courtesy Sheffield Measurement, Inc.)*

D2. ***machine vision*** - in industry, utilizes a pictorial image of the workpiece as part of a system of quality, machine or process control. Control is accomplished by capturing the image by electronic methods and then using digital data of the image, as the data is processed by a computer, to provide a display, to sort good and bad parts or to actuate control mechanisms. Machine vision systems are versatile and have many non-manufacturing applications in the fields of medical diagnosis, surveillance, zip-code mail sorting, traffic control, and bar code reading.

A machine vision system includes means for proper illumination of the workpiece or scene to be pictured, a camera or cameras, an analog to digital converter (though some systems process digital data directly from the camera), sufficient computer stages to process the data, computer software for the application, and actuating equipment that responds to the digital signal from the computer. Proper lighting is a critical factor and there are various lighting arrangements: backlighting, low-angle lighting or diffuse lighting to emphasize the

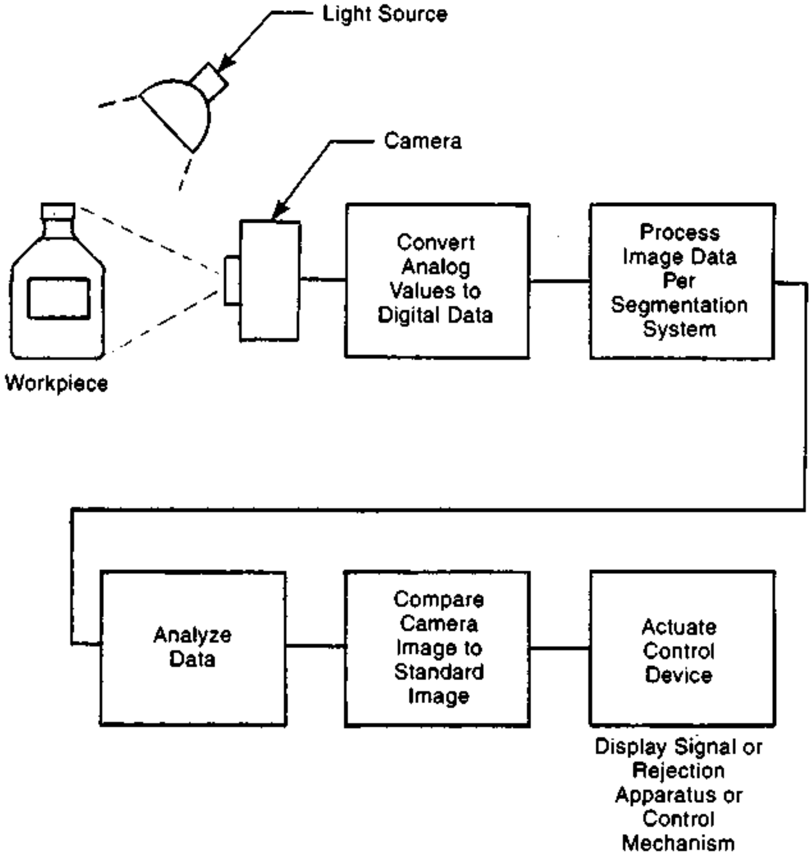

Fig. 14D2 Major elements of an industrial machine vision system used for inspection or control.

essential image elements. Fig. 14D2 illustrates the elements of a typical industrial vision system. Image processing removes unwanted detail. What detail is wanted and what is not wanted is a result of segmentation, the procedure of choosing the elements that must be measured to achieve the desired results. Segmentation reduces the amount of data that must be computer processed, speeding up the operation of the system. One common form of segmentation is to concentrate on the "edges" of the image, the changes in contrast that are characteristic of the edges of the workpiece or the edges of a shadow of a three-dimensional workpiece. (This localized analysis is one reason why proper illumination is critical.) Unexpected edges may be evidence of a surface flaw or other defect in the workpiece. Another segmentation approach is to scan with the camera only a narrow strip across the workpiece instead of its full area, if that is enough to make the desired measurement. Another is to analyze only a small critical portion of the whole image. Even with segmentation, because of the large amount of data in each picture image, high-capacity computer systems are required. The camera includes a lens system to focus the light and a CCD (charged coupled device) integrated circuit that receives the camera image (instead of photographic film that would be used in a film camera). Each pixel (picture element of the CCD sensor) in the camera senses the brightness of light focused on it. The brightness level at each significant pixel is converted to a binary digital number that is processed by the system's computer. Most machine vision cameras are monochromatic, so the brightness value is from a grayscale. Color filters may be used on the camera, however, or color cameras may be used, when color is an important factor in the particular application. All inspection and machine control operations involve computer analysis of the image data. This analysis may involve such things as counting the number of pixels between two lines or edges, determining the radii of some curved edge, counting the number of pixels in the entire image, etc. After such analysis, these measurement data are compared with the data stored in the computer that defines a standard pattern or value for the characteristic being measured. Depending on the difference between the two sets of values, machine or process controls may be adjusted or parts may be rejected.

The advantages of machine vision systems compared with human visual inspection or control are the much greater consistency and reliability of measurement that are inherent in the machine system. Also, machine vision does not suffer from fatigue, can operate in adverse working conditions and can often be operated at higher speeds than a human counterpart.

When used for component inspection, machine vision can provide several different types of information: 1) part identification, 2) the presence or absence of a component or certain features, 3) shape verification, 4) measurement of length, width, area, hole diameter and hole position 5) inspection of surface finish including surface flaw detection. 6) quantity verification when multiple components are involved.

One machine control application is the guiding of robots. Machine vision on a robot can guide the robot to locate the part, then identify it, then direct the robot's gripper to the proper position to grasp the part correctly, and then, after it is grasped and moved to the desired location, orient the part to fit the receiving space. Other applications of machine vision are inspections made throughout the electronics industry for both circuit board and integrated circuit manufacture. Specific examples are inspection of circuit path widths, completeness of population of boards and soundness of solder joints. Machine vision provides feedback control data in wire bonding and die slicing operations. In the paper, textile and plastics industries, machine vision monitors the soundness of continuous webs of rapidly-moving material during processing, including the completeness of coatings applied. In high-production printing, it monitors the registration of different colors on the printed document. In the food industry, machine vision identifies and rejects undersize, oversize or misshapen products in the packaging of cookies, candy bars, and similar products. For many products, it verifies that labels are properly in place on containers. In the painting of various products, it confirms the proper gloss, color, coverage and freedom from runs or other defects. Machine vision finds flaws in individual parts made with highly automatic glass, plastic and metal manufacturing processes, and monitors the quality of manufactured containers.

D3. ***laser scanning*** - is a method used for dimensional inspections. In one common technique, the workpiece is placed between a low-power scanning laser beam and a photodetector. Scanning is achieved by directing the beam to the axis of a rotating mirror which reflects the image to different points on a collimating lens. The axis of the mirror is at the focal point of the lens. The lens directs the parallel beams to a collecting lens that focuses the beams on a photodetector. A workpiece is placed between the two lenses. The collecting lens receives the beams that pass the workpiece but not those that strike the workpiece and cast a shadow on the collecting lens. The dimensions of the shadow, and thus the workpiece, are calculated by the timing of the spaced laser beams on each side of the shadow. A microprocessor makes the necessary calculations and displays the width or other workpiece dimension of interest. Fig. 14D3 illustrates the working principle. Since there is no contact between the workpiece and measurement tools, the procedure is useful for in-process measurements. Workpieces can be measured while they are in motion on a machine or conveyor. Multiple parts can be measured simultaneously by the one beam. Bench-mounted laser "micrometers" are also used. Accuracies of ±10μin (0.25μm) are achievable for dimensions of 2 in (50 mm) or less. For larger dimensions, measurement tolerances are correspondingly larger.

In another system, the scanned laser beam is received by an array of photodiodes instead of a single photocell. Depending on the location of the edges of the workpiece, some diodes receive the laser beam and some do not. From these differences in the signals received, the dimensions of the part can be determined.

Another measurement aims a laser beam at a curved surface and records the reflections.

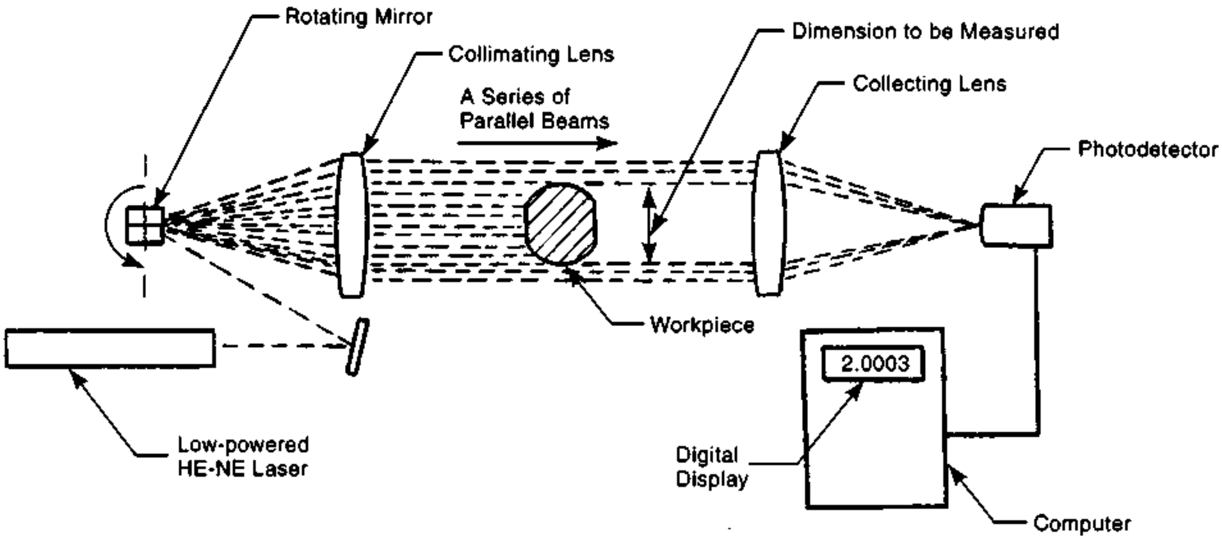

Fig. 14D3 The working principle of laser scanning for dimensional measurement. The dimensional measurement is based on the elapsed time between the detection by the photodetector of the laser beam from each side of the workpiece.

Thousands of points per second are scanned and the resulting data describes the curved surface in detail. The unit's computer compares these data with the specified dimensions and indicates whether or not the shape meets specifications.

Still another system uses interferometry. In this method, a laser beam is split into two separate beams by a partially silvered mirror. One beam travels to a fixed mirror and the other to a movable mirror on the workpiece to be measured. The beams are combined and the visual pattern of the interference of the two beams is fed to a photoelectric detector and digital counter. The number of light fringes indicates the displacement of the movable mirror. The method is very accurate and is used in measuring the accuracy of, and in calibrating movements of machine tool elements.

E. Automatic Guided Vehicle (AGV) Systems

An automatic guided vehicle is a device for moving unit loads of materials from one place to another, within a facility, with no accompanying human operator. Vehicles are battery powered and an on-board computer controls the movement. Guidance is provided by one or more of a number of methods. One method uses an electrical inductance wire embedded in the floor. The vehicle has a sensor system that follows the wire. Other methods use optically-read paint or tape markings on the floor or electronically-read magnetic markings on the floor. Some systems use a scanning laser and reflective markers to determine the vehicle's position by triangulation. An inertial guidance system is used on other vehicles with an on-board gyroscope and odometer. Current systems have the capability to control movement over a number of different routes and destinations. Some have data-entry devices so that the path can be modified by factory-floor personnel when necessary.

The vehicle may be loaded and unloaded by human operators, by robots, or by arrangements involving powered conveyors. Automated guided vehicles (AGV) are considered by some to be robots. Both materials, tools, and major components such as car or truck engines, are moved with AGV systems. The vehicles normally move at a rate that is slower than a person's walking speed and can stop very quickly if necessary. They include easily-found emergency stop buttons and/or obstacle sensors and

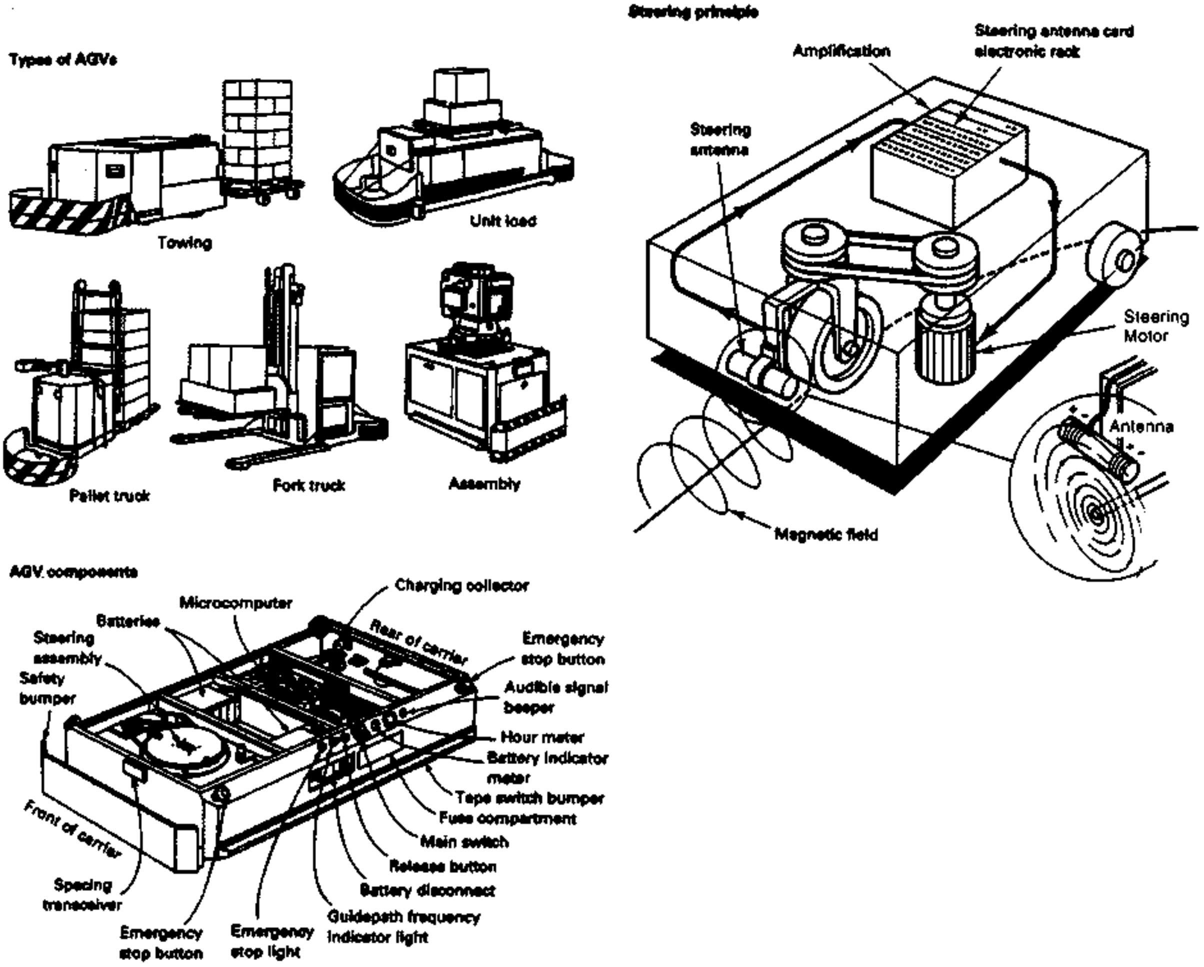

Fig. 14E Automatic guided vehicles, AGV, are used to move materials, parts, products, tooling and supplies within a factory, without an on-board operator. One guidance system using a wire buried in the floor as a guidepath is illustrated. *From Materials and Processes in Manufacturing, 8th ed., E. Paul DeGarmo and others © 1997. Reprinted with permission of John Wiley & Sons, Inc.*

circuitry to stop the vehicle immediately if some object is in the vehicle's path.

There are three main types of AGVs: those that carry the unit load right on the vehicle, those that tow one or more trailers or other non-powered vehicles, and those equipped with lifting forks. The latter type are used to transport pallets or skids of material. They replace, for at least some operations, human-operated forklift trucks. Many unit-load vehicles are made to transport one particular kind of material, for example, paper rolls in a newspaper printing plant or coils of sheet steel in a stamping plant.

Fig. 14E provides an illustration of the AGV concept.

F. Automated Storage/Retrieval (AS/R) Systems

These systems use automatic devices which, under computer control, place standard loads of material on storage racks or remove them from the racks. The location in the racks is random, depending on where there is open space. The system uses a standard load of material - a pallet load, a handling tray load (for small to medium-sized parts) or a tote box load. The racks have openings that match the size of the standard load. The system is under complete computer control; the computer remembers where each item is stored and, when an item is to be retrieved from stock, directs the retrieval device to the oldest unit of that item in the racks. There are four basic components in the AS/R system: 1) the storage/retrieval, stock-handling, machine which usually runs on a track at the storage rack and operates automatically from computer signals, 2) the storage racks, usually one to three unit loads deep at each opening, and built to a height of as much as 70 ft. (21 m). 3) a computer to control the system and keep stock records and 4) a conveyor or other means to handle the stored items to and from the storage /retrieval device. Fig. 14F illustrates a typical system.

AS/R systems are used for a wide variety of materials. They are employed in manufacturing for factory-floor storage of work-in-process, tools and spare parts. In warehousing and distribution, these systems are used for order picking of finished products and for storage of raw materials and component parts. Applications include grocery warehouses, university and corporate research libraries for low-usage books and periodicals, chemical blending operations where drums or raw materials and finished products are stored, textile, sheet metal and printing operations where rolls of coiled material are stored, and storage of bakery pans, office records and production molds, fixtures, tools and dies when they are not in use.

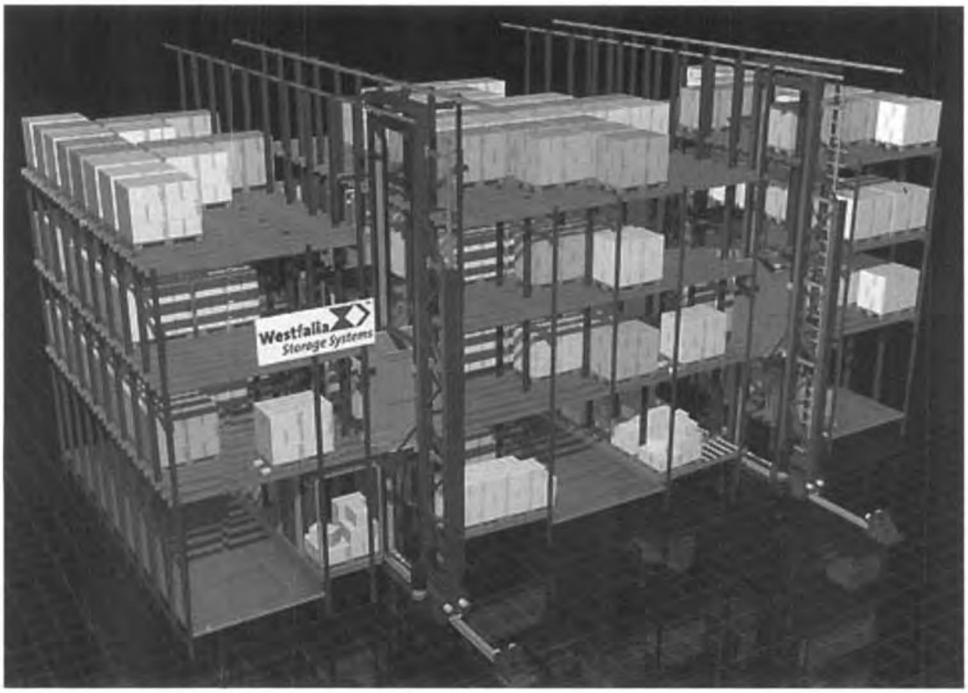

Fig. 14F A complete automatic storage and retrieval system, operated under computer control. Cartons of completed products are automatically placed in open locations in the storage racks. When shipping orders are processed, the computer directs the unloading device to the oldest carton in storage of the product to be retrieved. The carton is automatically moved to the particular loading station where it is needed. (*Courtesy Westfalia Storage Systems*)

G. Use of Robots in Manufacturing Operations

Industrial robots are mechanical devices that can be programmed to perform a variety of tasks of moving and manipulating materials, parts, tools or other devices automatically. Often having an appearance similar to that of a human arm and hand, robots typically have the following major elements: 1) the manipulator - the structure and linkages that provide movement. Robots may have as many as 6 axes of movement, described sometimes as "six degrees of freedom", 2) the end-effector - a hand-like gripper or some device that performs a useful operation, 3) a controller - the apparatus that starts, stops and controls the action of the robot, stores data and communicates with other data devices or with persons, 4) the power supply - for operation of the robot. This may be from hydraulic or pneumatic sources or from electrical servo or stepper motors. Electric power is the most common, 5) sensors (in many robots) - that detect position, contact, force, torque, resistance, or may have vision capabilities. The signals or data are transmitted back to the controller. 6) active devices - Robots may be equipped at the end of the arm with active devices such as spray guns, welding tools, drills, routers, grinders, buffing wheels, or other tools. Fig. 14G illustrates the major elements of a typical industrial robot.

Some robots are equipped with a "teaching pendant", a hand controller that can be used by a human operator to move the robot's arm and gripper. The pendant records the movements, their rate of speed and the end points. The sequence of motions is retained in the controller's memory and can be "played back" to repeat the desired series of motions necessary to perform the operation. Some robots have point-to-point control over the end effector's movement; others employ continuous path control. Some have fixed motion paths; others provide variation in the movement of the arm depending on information sent to the controller by sensors.

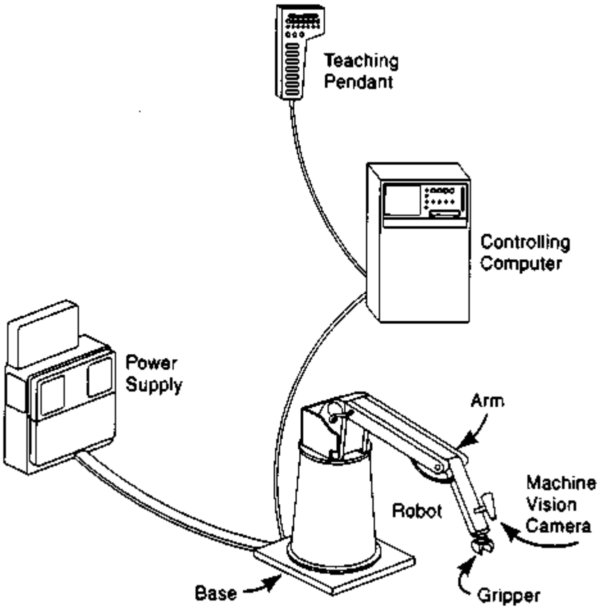

Fig. 14G The major elements of a typical industrial robot.

G1. ***areas of robot applicability*** - Robots have been most common in operations where the working conditions are unpleasant, difficult, or unsafe for human operators. Hot forgings and castings are easily handled by robots. Heat, fumes or odors, dirt, dust and solvents are unpleasant, unhealthy, or hazardous for human operators but are not a problem for robots. The other justification for robots comes from the labor savings that they provide. However, the cost of accompanying equipment for feeding, orienting and transporting parts for robotic application is a cost that must be considered in addition to the cost of the robots themselves. The operation must have sufficient volume to justify the investment. Robots are particularly useful in situations where there are frequent product changes; they provide "flexible automation" because many operational sequences can be stored in the memory of their control computers. Because of the sensory capability of present robot-based systems, especially in units with machine vision, justification for use in operations with variable conditions is more feasible. Still, robots are less likely to be found in assembly operation where a great number of parts are involved. The flexibility, compactness and skill of the human operator in those situations is less easy to replace.

G2. ***robots in foundries*** - Because of heat, the heavy weight of many workpieces and the other unpleasant or hazardous aspects of the working environment, robot use is often easily justifiable in foundries. Robots are most common in high-production shops where the opportunities for labor cost reduction may be more substantial.

G2a. ***in die casting*** - The heat, dirt, hazards and repetitiveness of the operation make robotic handling particularly attractive in die casting. An early, and still common, application was the unloading of castings from die casting machines. Spraying lubricant on the die casting die, and ladling molten metal to the machine are other applications. Additional operations are cooling the casting by dipping or spraying, trimming to remove flash, gates and runners, and placement of inserts in the die.[3] Trimming involves the placement of the casting in a suitable press die, activation of the trimming press and the removal and setting aside of the trimmed part. Deburring with robot-held rotating tools has been employed. The tool is moved along the parting line of the casting. An advantage of this method is that it does not require the use of a dedicated die for each casting.

G2b. ***in sand-mold casting*** - Robots are used less in sand-mold foundries than in die casting despite the heat and unpleasant working conditions but there are many possible applications. Robots are used for pouring molten metal into molds, for core handling and core gluing - if needed, core deflashing, spraying refractory coatings on molds, moving molds to and from baking ovens, venting molds and handling of hot castings at shake-out. Other robotic operations are the removal of gates and risers, using robot-held flame or plasma cutters, and the deflashing of castings after shake-out. Dross skimming of molten metal is another application in aluminum foundries. Deflashing may be simply done by breaking off the excess material; otherwise grinding with a robot-held rotating grinder is the robotic method.

G2c. ***in investment casting*** - The process of making shell molds for investment casting requires repeated dipping of the wax pattern in slurries or fluidized beds of ceramic material and sand. Each dipping step is followed by a drying stage. There is a final firing operation to melt the wax pattern and fuse the ceramic. The repeated dipping and the handling to and from the drying and firing operations are carried out robotically instead of manually, in some foundries, with both cost and quality benefits.

G3. ***robots in forging*** - Robots are being used in higher-production shops to load forging billets into furnaces, to move heated billets from furnaces to presses or drop hammers, to move workkpieces from one die station to another, and to move the forgings from forging presses to trimming presses, drawing benches, pallets, or conveyors. They are also used to apply lubricant to both workpieces and dies. Since the workpieces are very hot, the use of robots can be justified for elimination of unpleasant workplace conditions as well as for productivity improvements.

G4. ***robots in metal stamping*** - are used for unloading workpieces from punch presses (fed with coil stock), loading workpieces in presses for secondary stamping operations (for example, unloading a workpiece from a deep drawing press and positioning it in a trimming press die) and for press-to-press transfer of workpieces in stamping lines. Robots are justifiable because of the elimination of exposure of human operators to safety hazards at the presses. When production levels are sufficiently high to justify high speed, dedicated, transfer equipment, robots are not fast enough to compete. However, when there are a variety of parts to process on the stamping line or when quantities of each are more moderate, robots are more apt to be specified.

G5. ***robots in injection molding and other plastics molding*** - Unloading molded parts is the most common robotic operation with plastics. Usually, injection molding is involved but robots are also used with compression and transfer molding, particularly when the parts are large. Another robotic application in the molding of plastics is the placement of metal inserts in molds. In layup molding of reinforced fiberglass parts, the mixture of glass fibers and polyester plastic is sprayed into open female molds by robots. Other robotic operations are trimming parts after molding, drilling, buffing, palletizing and packaging. Fig. 14G5

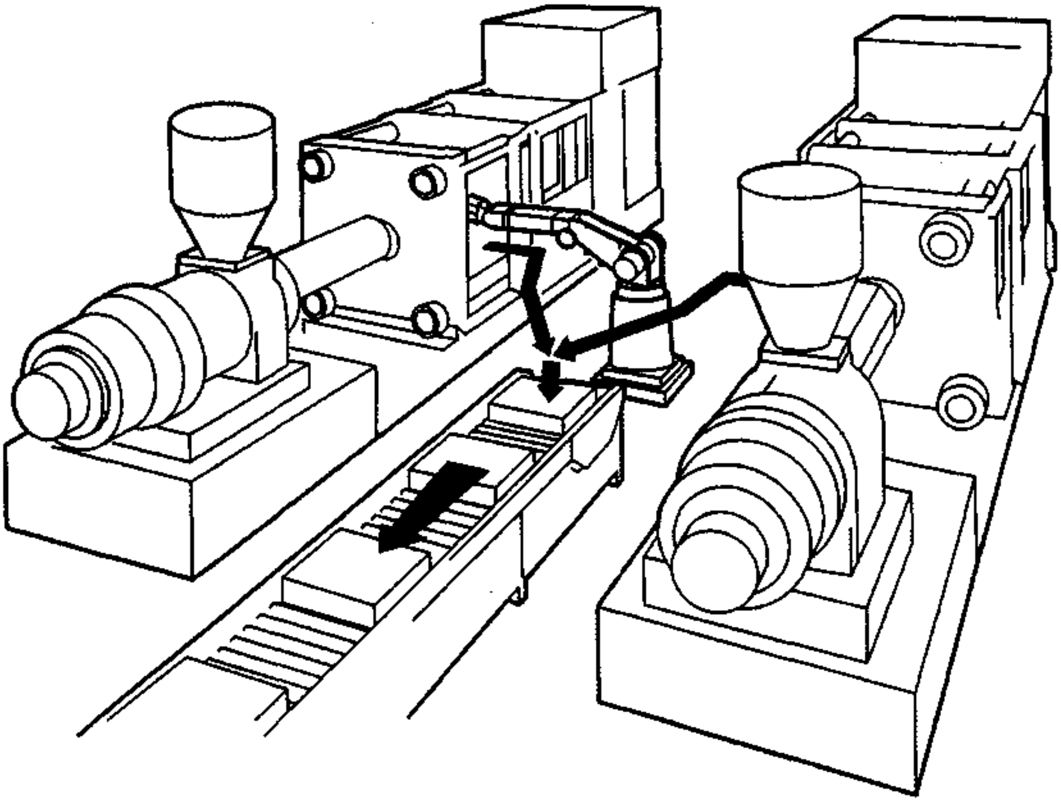

Fig. 14G5 A robot unloading molded parts from two injection molding machines. *(Courtesy Milicron, Inc.)*

illustrates an arrangement where one robot unloads two injection molding machines.

G6. ***robots in welding*** - More robots are involved in welding than in any other industrial operation and the most common robotic welding operation is spot welding. Robotic spot welding is the standard method for automotive sheet metal body components. Several kinds of arc welding and, more recently, laser welding are also carried out robotically. In all robotic welding operations, the guns or opposed welding electrodes are positioned, held and actuated by the robotic devices. With spot welding, the robot (usually six-axis) moves the electrodes from spot to spot on the fixtured sheet metal assembly.

Robots performing arc welding use noncontact seam trackers[3]. The full robotic arc welding system includes, in addition to the robot, a suitable welding gun, a positioner to hold the workpiece in a controlled location, grippers to hold the workpiece, a control system for movement of both the robot and the positioner, arc control equipment, power supply, shielding gas supply, and adaptive control that utilizes feedback from the joint as the operation progresses. Robots with teaching pendants can be programmed to make the weld along complex spatial paths. Submerged arc welding can be carried out robotically, and some robotic laser welding has been used in the automotive industry instead of arc or spot welding to fasten roof panels to other components, for floor pan and truck front-end assemblies, and for frame members[3].

Since welding robots do not get fatigued or distracted, they typically achieve a much higher percentage of time in operation, and much better repeatability than welding tools operated manually. The robots also relieve human operators of the need to carry out an awkward, not fully healthful, operation. Vision systems track and control the welds.

G7. ***robots in painting, sealing, coating*** - Spray painting by robots provides greater consistency and uniformity of coating than that controlled by a human spray painter.[3] Robotic painting is very common in the automobile industry for auto bodies and is also used on appliances, furniture and other commercial components. Paint, both liquid and powdered, is sprayed robotically. Primer, top coat, stain, mold release, porcelain enamels or other materials are similarly applied. When painting parts on a conveyor, the robot and the conveyor are synchronized. Electrostatic attraction typically accompanies the robotic system. Robots are programmed to spray deep pockets where electrostatic attraction is not effective.

Sealants and adhesives are also applied robotically, but rather than using a spray, the robot deposits a bead or spots of sealant material along a prescribed path on the workpiece. Robotic application provides consistent, uniform dispensing with a better utilization of sealant material and freedom from operator exposure to solvents and other possibly harmful materials. The automotive, appliance, aerospace and furniture industries use robotic application of these materials[3].

G8. ***robots in material handling*** - are common. Less-sophisticated robots having less precise placement capabilities often can be used when moving workpieces from one workstation to another. In manufacturing cells with a circular layout, one robot may move workpieces to and from seven workstations as illustrated in Fig. 14G8. Other applications include moving workpieces from pallets to machines (and the opposite operation - palletizing workpieces after an operation), removing parts from cases, bins, carousels, and conveyors; positioning parts in fixtures on machines, placing parts in kits; and placing parts or materials on conveyors. Gantry robots, which are conventional robots mounted on the underside of a bridge crane, have a much larger envelope (service area) and are used in material handling applications.

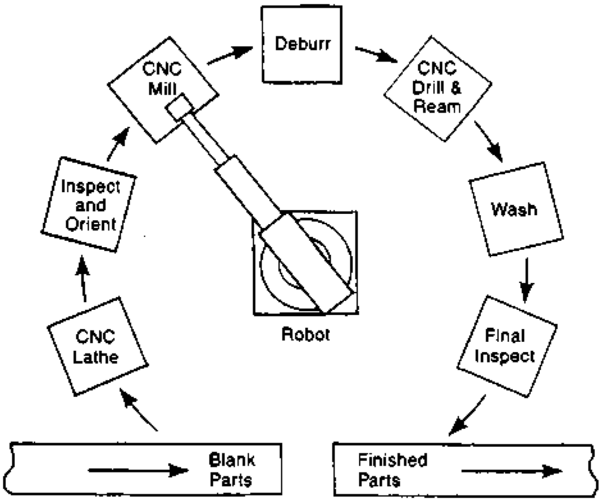

Fig. 14G8 A manufacturing cell with a circular layout so that a single robot can move workpieces between the conveyors and the production machines.

G9. ***robots in mechanical assembly*** - The penetration of robots into assembly operations is less than in the welding, painting and material handling mentioned above. One exception is electronic assembly as noted below and in Chapter 13. Other notable robotic assembly operations are the installation of light bulbs in automotive instrument panels, the installation of auto windshields as noted below, and the spray application of adhesives. Assembly of small electric motors is another application.[3] Video tape recorders have been assembled robotically by Sony Corp and Polaroid camera shutters and other precision components have been assembled by robots.[3] Where necessary or justifiable, robotic equipment can handle and assemble difficult parts such as springs, crooked wires, and compliant plastic parts.[3] Fig. 14G10 shows a robotic pick and place machine assembling parts of an electronic remote key for an automobile.

G10. ***robots in electronics*** - Although they are not normally called robots in the industry, robotic or robot-like machines are used in the placement of circuit devices on printed circuit boards. These units are normally referred to as pick and place machines, or placement machines, and are used for both the surface-mount type of devices and those with through-hole connecting leads. The machines are also used in test and inspection operations, and to load and unload machines involved in parts fabrication. These machines have a limited number of axes of motion compared to the sophisticated 6-axis robots that have pivoting actions similar to those of the human upper and lower arm, wrist and

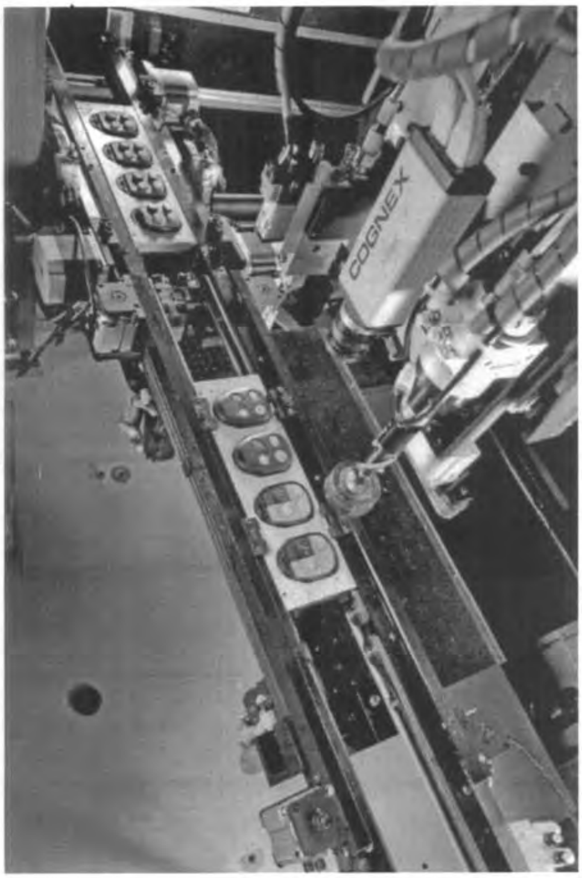

Fig. 14G10 A robotic pick and place machine assembles parts to an automotive remote key pad. *(Courtesy Universal Instruments.)*

hand. Most pick and place machines are mounted on a gantry-type frame which supplies motion in the x and y directions. The gripping device is given Z-axis motion (up and down) and there is also a gripping motion (or use of vacuum) to hold the devices to be placed. Computer control and programmability help these machines conform to the usual definition of robots. Similar machines are also used to assemble majór parts of cellular telephones automatically.

G11. ***robots in quality control*** - The major use of robots in quality control is to move and position workpieces in testing and measurement devices and, after the operation, to move the workpiece to where it is needed. In some applications, the robot may actively participate in the inspection or test. In one test of cellular phones, the robot places each phone in a test cradle, presses specific numbered keys and, using machine vision, verifies that the phone's display is correct. In a more conventional arrangement, robots are used to move compact discs between a series of eight testing units, each of which performs a particular test on the discs. Robots with machine vision can make some visual verifications or evaluations during the process of moving a workpiece from one workplace to another.

G12 ***robots in machining*** - Loading and unloading workpieces from machine tools is the prime robotic application in machining. Fig. 14G12 shows a typical application. However, robotically held and used power-tools are used in a number of applications where the precision requirements are less strict or where fixtures can help control the accuracy of the cut. Fixtures may be required because robotic arms do not possess the rigidity of machine tools, nor the accuracy of CNC positioning

Fig. 14G12 Robotic handling of a large workpiece (an aluminum vehicle wheel) between machining operations. *(Courtesy Alcoa Inc.)*

mechanisms. Powered cutting tools held and operated by robots include: drills, reamers, taps, countersinking and counterboring tools, routers, rotary files, grinders, polishing and buffing wheels. These tools are power driven, and are used for drilling and related or similar operations, deburring or surface improvement. When deburring, the cutting tool is usually a rotary file, made of carbide or other hard material. The robot is equipped with a force compensation device to offset deflections caused by variations in the size of the burr to be removed. Other robotic machining involves the use of flame or plasma cutting torches or a laser cutter held by the robot.

Machining operations with the robot handling the cutting tool are most common on large parts where the operation otherwise would be performed by a worker with a hand-held power tool. Aircraft, trucks, space vehicles, vessels, railroad cars and locomotives are examples of products where these operations may be feasible, where it is easier to move the tool to the work instead of vice versa.

G13. ***robots in heat treatment*** - are used to handle parts to be processed, primarily in loading and unloading heat treatment furnaces, salt baths or washing and drying equipment. Robots also are used to immerse workpieces in quenching baths.

G14. *robots in some specific industries*

G14a. ***in automobile assembly*** - The auto industry has been a leader in the use of robots. The single most prevalent use of robots in automobile assembly is in spot welding body stampings. Other significant uses are arc welding, body painting and coating, dispensing and placement of adhesives and sealers, and loading, unloading and transfer of workpieces.

Assembly of glass windshields to auto bodies is one interesting operation. The windshield is first picked up with vacuum cups and positioned in a fixture. A robot dispenses an adhesive to the edges of the glass in the fixture. A laser system measures the position of the auto body in relation to known reference points and the transport robot uses those data, after the windshield has been picked up again, to position it accurately in the auto body opening.

Body stampings are moved to the assembly line by material handling robots.

Painting of auto bodies includes the use of long-arm robots that can apply paint uniformly to large body panels.

Fully automatic assembly of automobiles and subassemblies is inhibited, per Nof[3], by the very large number of different parts involved, limitations of accuracy and tactile sense of robots, and space limitations.

G14b. ***in appliances*** - One example of robotic assembly in appliance manufacture is the use of a six-axis robot to insert an extruded profile rubber seal in the doors of dishwashers. Robots are also used to unload and load wire coils used in transformers.

G14c. ***in the food industry*** - Robots are used in the food industry for many tasks: to handle poultry products and prawns, to candle eggs, inspect pouches of ready-to-eat foods, sort mushrooms and oysters, grade and cut meat, and process fish. They place airline food, tableware and condiments on trays, using machine vision. Robots assemble assortments of chocolate candies, placing each item in its assigned location. They load machines for packaging wrapped candies. Robots are also used in decorating cakes and chocolate candies. They transfer baked items (bread, cookies, doughnuts and cakes) from oven conveyors and place them on packaging lines with each item prearranged for position in the packages. Gripping is achieved by vacuum. When equipped with machine vision, the robots inspect the products as they are handled.

In meat packing plants, robots pick up frozen fish fillets, ground beef patties, sausages and poultry pieces from freezer conveyors and stack them in packaging containers. Machine vision directs the pick up location for the robots and inspects pieces for correct size and shape. The robots stack the proper quantities of pieces in each container and place each piece in the correct position.[3]

G14d. ***in glass making*** - robots are used to charge molds for molded glass components and to handle sheet glass and molded parts. The heat factor in these operations presents difficult working conditions if human operators are used, but does not impede a properly designed robot.

G14e. ***in chemical industries*** - Robots are used for various material handling applications in chemical processing. They are employed for reactor clean up, particularly when the work would be hazardous for human operators.

G14f. ***in woodworking*** - Robotic handling is sometimes used with furniture components. Other applications are drilling and routing or milling of workpieces by robots and some assembly operations. Robots place components in assembly fixtures and press dowels or similar parts into workpieces for their assembly into furniture. However, the use of robots in woodworking is less widespread than in a number of other industries.[3]

G14g. ***in other industries*** - Robots pack assortments of pills in blister packages using machine vision. Other similar applications are palletizing of containers of various products and packing of bagged materials into shipping containers.

References

1. *Stereolithography and other RP&M Technologies,* Paul F. Jacobs, SME, ASME Press, New York, 1996.
2. *Rapid Prototyping, Principles and Applications in Manufacturing,* Chua Chee Kai and Leong Kah Fai, John Wiley and Sons, Inc., New York, 1997.
3. *Handbook of Industrial Robotics,* Shimon Y. Nof, Ed., John Wiley & Sons, Inc. 1999, ISBN 0-471-17783-0.
4. *Rapid Prototyping, Principles and Applications, 2nd ed.* Chua C.K., Leong K.F. and Lim C.S. World Scientific Publishing Co., Singapore 2003.
5. *Materials and Processes in Manufacturing, 8th ed.,* E.P. DeGarmo, J.T. Black, R.A. Kohser, Prentice Hall, Saddle River, NJ, 1997.
6. *Van Nostrand's Scientific Encyclopedia, 7th ed.,* Considine, D.M., Van Nostrand Reinhold, New York, 1989.

Section II

How Products, Components and Materials Are Made

A

abrasives - are materials used to polish or machine metals, wood, stone, glass, and other materials by the cutting action of the small grains of the material. (Abrasive machining is described and illustrated in 3C). There are two kinds of abrasives, natural and man-made. Natural abrasives include aluminum oxide ("corundum"), emery (impure aluminum oxide), diamond, sand, crushed garnet, quartz, tripoli, talc, and pumice. These materials are mined, crushed, classified by size and shape, and usually bonded together in a grinding wheel, stone or block, or bonded to paper or cloth. Man-made abrasives are silicon carbide (SiC) "Carborundum", aluminum oxide (Al_2O_3) "Alumina", boron nitride (BN), and boron carbide (B_4C) made by various chemical processes.

Silicon carbide is made from pure sand, coke, sawdust, and salt. The mixture of these ingredients is placed in a long, trough-like furnace and heated by an electric current from graphite electrodes. Temperatures up to 4400°F (2400°C) cause a complex chemical reaction that yields SiC and carbon monoxide. Crushing of the silicon carbide to yield small grains follows the furnace operation.

Aluminum oxide is made from bauxite, the ore of aluminum. The calcined bauxite (heated to drive off unwanted materials) is melted in an electric arc furnace. Aluminum oxide is also made with the Bayer process wherein bauxite is mixed with sodium hydroxide and seeded so that aluminum hydroxide precipitates. The aluminum hydroxide is heated to drive off the water and produce granular alumina.[1]

Also see *grinding wheels* and *sandpaper.*

ABS plastics - are a family of plastic alloys that are terpolymers of acrylonitrile, butadiene and styrene. ABS is also SAN (styrene acrylonitrile copolymer) with butadiene-derived rubber dispersed in it. ABS is most commonly prepared from 50% or more styrene monomer. (See *polystyrene.*) The styrene is a clear and colorless liquid at room temperature. It is produced from the dehydrogenation of ethylbenzene, a product of ethylene and benzene, both petroleum derivatives Acrylonitrile is made chiefly from propylene (obtained frorm petroleum refining) by treating it with air and ammonia in a fluidized bed catalytic reactor.[4] Butadiene is a colorless gas used in the production of neoprene and nylon and other materials. It is produced, along with ethylene, from the steam cracking (11H2a and Fig. 11I1) of naphtha and oil obtained from petroleum. One of three polymerization processes may be used to produce the ABS from these materials. They are emulsion polymerization (4A3d), bulk polymerization (4A3a), or suspension polymerization (4A3c).

ABS plastics are used for telephones, helmets, luggage, computer housings and other housings, pump impellers, pipe and pipe fittings, toys and often, plated automotive grills, door handles, window cranks and other components that are electroplated to resemble metal.

acetal plastics - are polyoxymethylene (POM) and have the $-CH_2O-$ unit repeated in their backbone[15]. Acetals are made from the addition polymerization (4A2a) of purified gaseous formaldehyde. Formaldehyde is produced from the oxidation of methanol in the vapor phase.

Three trades names for acetal plastics are Delrin (homopolymer), Celcon and Ultraform (copolymers). Acetals are used for many mechanical parts including gears, bearings, conveyor links, faucet parts, stereo cassette parts, zippers, food processor blades, automobile door handles and seat belt parts.

acetate fibers and fabrics - See chapter 10, particularly section 10A2.

acetone - is made as a byproduct in the production of phenol from cumene hydroperoxide. It is also made by dehydrogenating isopropyl alcohol with a catalyst. Acetone is an industrial solvent, used in the production of rayon, plastics, smokeless powder, lacquers, and lacquer solvent.

acrylic plastics - are a family of plastics derived from acrylic acid. The most common is polymethyl methacrylate (PMMA), made from the polymerization of methyl methacrylate, $CH_2{=}C(CH_3)COOCH_3$. Methyl methacrylate is an ester that results from the reaction of methacrylic acid and methyl alcohol. Another method reacts sodium cyanide and acetone to yield acetone cyanhydrin and then reacts this with methyl alcohol to produce methyl methacrylate. Polymerization (4A2 and 4A3) takes place with heat, light, and organic peroxides as catalysts. Bulk polymerization (4A3a) is commonly used.

Other acrylics are made by combining methyl acrylate or acrylonitrile with methyl methacrylate to produce, after polymerization, copolymers of PMMA. The acrylonitrile is made from ethylene or acetylene gas derived during petroleum refining.

These materials, known by several trade names such as Plexiglas and Lucite, have favorable optical properties and resistance to weathering. Common applications are automotive tail lights, window panes, outdoor signs, aircraft windows, small airplane canopies, watch crystals and various lenses. With mineral fillers, acrylics are used for counter tops and sinks. Acrylic emulsions are used in paints and textile finishing. "Orlon", "Acrylan" and "Dynel" yarns and fabrics are made from acrylic plastics.

adhesives - are materials that hold other materials together by surface attachment. There are many, many adhesives, some derived from natural sources and some from synthetic resins. The following are some noteworthy adhesives, the means by which they are produced, and their particular applications:

animal and fish glues - are made from waste material not suitable for food use. Animal glues are made from collagen, a protein found in bones, sinews and hides. These and other scraps are cut into small pieces, degreased to remove oils and fats, and then treated with lime, plumped, and washed. Usable material, a gelatin, results, and is removed with hot water. The mixture is filtered; water is evaporated and the residue is chilled, flaked and packaged for customer use.[4] It is also sold in liquid form. These glues are used in woodworking, book binding, sandpaper manufacture, and other applications involving paper. Other glues of animal origin are made from casein, a milk protein, and from blood albumin, treated with an aqueous alkaline solution. Casein glues are used in woodworking; blood albumin glues are used in the manufacture of plywood.

alloy adhesives - are made from combinations of two or more different chemistries, for example, rubber-based and thermoplastic combinations or thermosetting and thermoplastic alloys. These combinations of materials can provide better strength or other properties for some applications than either of the constituents can provide individually.

cyanoacrylate glues (super glues)[13] - are made from ethyl cyanoacetate which is mixed with formaldehyde (methylene oxide - HCHO) in a heated vessel. (The ethyl cyanoacetate is made in a series of steps from acetic acid and other materials.) A condensation polymerization (4A2b) reaction takes place, yielding cyanoacetate polymer and water. The water is evaporated and removed from the vessel, and the vessel is further heated to 305°F (150°C) to crack the polymer into gaseous monomers. These are piped to a condenser and collected, in liquid form, in another vessel. One or two more stages of distillation (11C1) may take place to purify the cyanoacrylate monomer. Additives are mixed with the monomer to inhibit too-early polymerization and to set viscosity at the desired level. The monomer is then packed, in a moisture-free environment, in plastic tubes for distribution and sale. The monomer, in the presence of a small amount of moisture from the atmosphere or moisture or an alkaline on the surfaces to be bonded, will repolymerize into a strong bonding adhesive. Cyanoacrylic adhesives are used in medical, dentistry, and construction applications, as well as for numerous household repairs and projects.

electrically-conductive adhesives - used in printed circuit board manufacture, are conventional epoxy or other thermosetting plastic adhesives, with a conductive filler: carbon powder or small flakes of gold, silver, copper or nickel. (See 13K6b.)

epoxy - is usually a two-part adhesive consisting of a thermosetting resin and a catalyst which is an amine or other curing agent. When the resin and catalyst, which are usually viscous liquids, are mixed, a thermosetting reaction takes place and the mixed material becomes a solid. The resin is usually made by reacting epichlorohydrin with phenol compounds. The epichlorohydrin is made from allyl chloride. Varieties of epoxy formulations are made with somewhat different methods and have a range of properties. Epoxies are used in bonding metals and other non-porous materials, in structural applications, in the aircraft industry - for composite construction and other applications - as coatings, and where electrical insulation is needed.

hot-melt adhesives - are made from thermoplastics that soften or liquify when heat is applied and solidify when they cool to room temperature. They are usually made from polyolefins, polyamides or polyesters, sometimes modified with waxes and other ingredients. They are used in making laminates, and in carpeting, packaging and book binding.

pressure sensitive adhesives - are often mixtures of phenolic and a nitrile rubber in a solvent.

pyroxylin cements - eg., "Duco" are solutions of cellulose acetate or nitrocellulose in a hydrocarbon solvent. When the solvent evaporates the adhesive is solid. These adhesives are used for household cements for wood and paper and in shoe sole bonding.

rubber-based adhesives - Natural rubber, butyl, neoprene, SBR nitrile, and polysulfide synthetic rubbers are widely used as adhesives. Many of these rubber-based adhesives are simply rubber dissolved in a solvent. SBR rubber is made from acrylonitrile and butadiene monomers. EPDM is made from ethylene, propylene and diene monomers. Several silicone polymeric compounds are rubber-like and are used as adhesives, though their best applications are as a potting material for electronic devices, particularly where high voltages and high temperatures are involved. Rubber-based adhesives are used extensively as sealants, where ability to withstand moisture, solar radiation, and vibration are more important than bond strength. They are of relatively low strength and are used to bond paper and other similar materials.

vegetable or plant-based adhesives - Tapioca paste is one basis for such adhesives and is used for gluing paper including envelopes, labels and postage stamps that are made to adhere by wetting the adhesive surface. Other vegetable glues are made from agar, a colloid derived from marine plants, gum arabic, from the acacia tree and from algin, derived from seaweed. Mucilage is a vegetable glue made from water-soluble gums. Starch-based adhesives made from corn, potatoes, and rice, are used for mounting wallpaper and in the manufacture of corrugated cartons.

white glue - used as a household adhesive, is a water emulsion of polyvinyl acetate, made by reacting acetylene gas and acetic acid with a catalyst. The resulting material is then polymerized and mixed with water. White glue is principally used to join paper and wood.

advanced ceramic materials, (high technology ceramics), (modern ceramics), (fine ceramics) - See 5B4a.

air bags (for automotive passenger protection) - Air bag systems have the following major components: air bags themselves, inflation devices for the bags, a pre-tensioning system for seat belts, and the control system. The control system incorporates multiple crash sensors that respond to the abrupt deceleration of the vehicle and are input devices to the computer system of the car. The air bags, called "cushions" are made from high-strength nylon fabric that has been coated with silicone plastic for lubricity (so that the folded bag can inflate in milliseconds). Bags are sewn with CNC sewing machines. Tethers are sewn inside the bags to control their shape for maximum cushioning. The fabric is cut with large openings to allow the inflation gas (nitrogen) to escape at the desired rate on impact. A uniquely-numbered bar code tag is sewn into each bag for later traceability. Sewn bags are run through a metal detector to insure that no sewing needle has broken off. The bag is manually attached to a compressed air source for an inflation test, and is then assembled to a metal frame with rivets or bolts. The frame also contains the inflation device which is contained in a sealed, drawn metal can with perforations, which allow the inflation gas to escape. The inflation device includes tablets of propellant that inflate the bag and an initiator, a electrical rapid-heating device with a small initiator charge that activates the inflation tablets. The bag is folded very carefully in a prescribed pattern. The operation is manual with the aid of fixtures. The airbag cover, the visible part of the car's dashboard or steering wheel, may be attached. A sampling of completed airbag assemblies is subjected to deployment testing.

air conditioners - are complex assemblies of many parts including two heat exchangers (one, the condenser, the other, the evaporator), an expansion valve (capillary tube), a compressor and drive motor sealed in a housing, fans or blowers for each heat exchanger with one or two electric motors to drive them, sheet metal or plastic shrouds for the fans, pulleys, drive belts, brackets, a supporting base, air filter screens, control devices, electric wiring for power to the motors and for control of the system, a volatile fluid refrigerant, a catch-pan and drain for condensate and a housing for the assembly including a front panel with movable louvers, an additional louvered panel and controls. The sizes of commercial air conditioning systems range from the small unitary units that fit into window openings to super-large units that may operate on a college campus or commercial complex for a number of buildings. The unitary type, described here, is made in substantial quantities using mass-production methods. Fig. A1 shows the components of a typical room air conditioning unit of this type.

Heat exchangers in these air conditioners are usually made from lengths of copper tubing bent into banks of connected tubing and press fitted into fins of sheet aluminum. The tubing is received from suppliers in coil form, is straightened (2K), cut to the several lengths needed and bent (2H2), as needed, including to the U-shapes needed in the heat exchangers. Tube ends are expanded (2H2i) or reduced in diameter (swaging - 2F1) for fitting to mating tubes. The fins are blanked (2C4) from coiled aluminum sheet stock. They include holes for the copper tubing and may be embossed (2D7) with

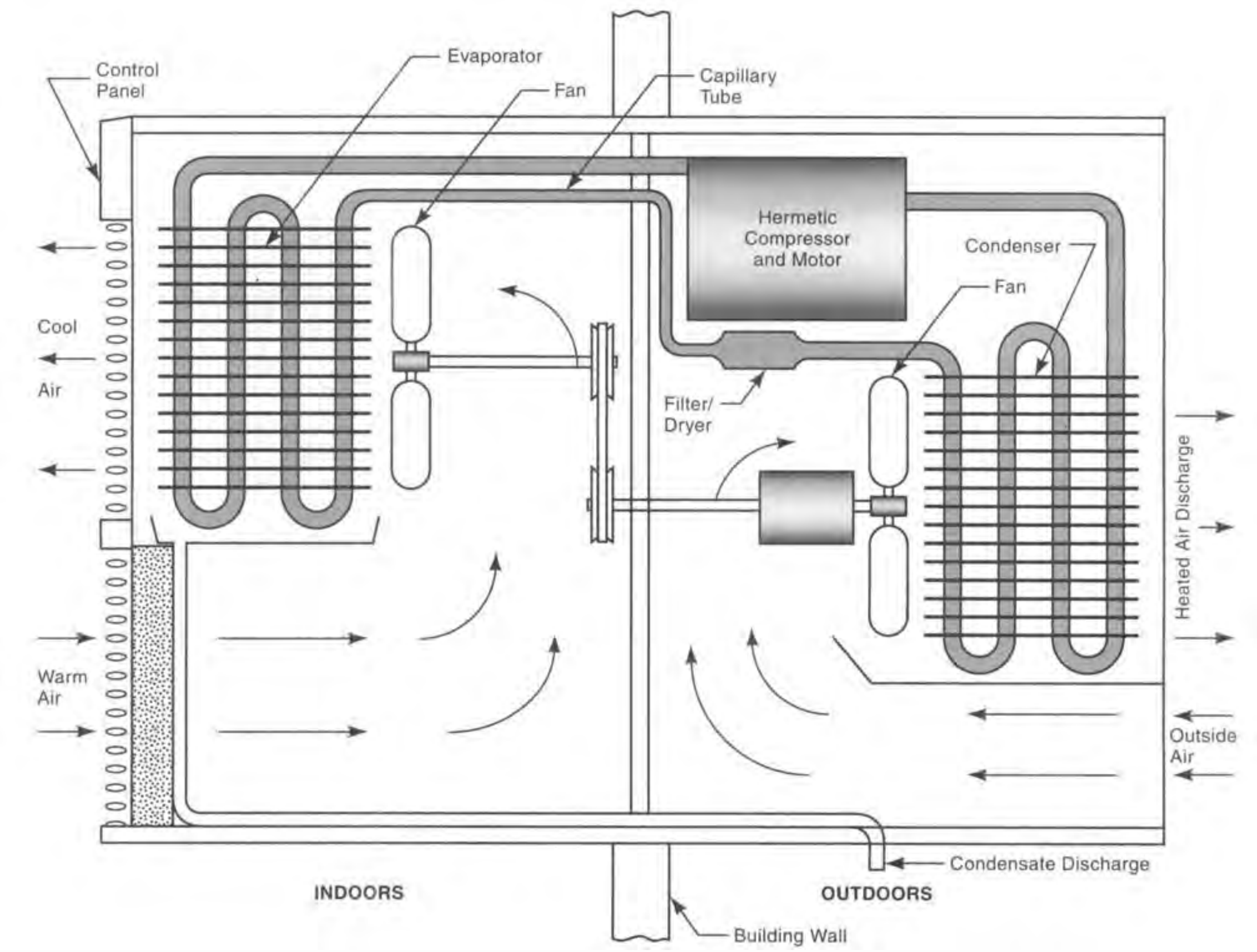

Fig. A1 The major components of a typical room air conditioner.

a pattern to increase the fin area within the air conditioner. Special machines press the copper tubes through stacks of fins. Various means are used to insure a tight fit between the fins and tubes. One involves the punching of extruded (flanged) (2D8) holes, thus providing spacers between fins as well as more contact area. Another method involves expanding the copper tubes from internal pressure after the fins are assembled. These heat exchangers are brazed (7B) to the U-shaped tubes and other tubes that carry the refrigerant to and from the heat exchangers and to and from the compressor, expansion valve, etc.

The compressor is usually a piston type made from cast iron, steel, and die cast (1F) aluminum parts, machined with various milling (3D), turning (3A1a), boring (3B5) and surfacing (3C and 3J) operations. Sometimes, rotary compressors of the vane type are used. Cylinders are cast iron and are bored and honed (3J1) on the inner surfaces. The usual compressor is the hermetic (sealed) type, with the compressor and its drive motor both encased in a steel, can-like, housing. The shaft for the electric drive motor also serves as the shaft for the compressor. The hermetic housing consists of two deep-drawn (2D5) parts that fit together. Sealing is permanent and is accomplished by arc welding (7C1d) the seam between the two parts. The only openings in the housing are leakproof and provide for the electrical connections to the drive motor and inlet and outlet connections for the refrigerant. There is no need for a seal on a moving shaft inside the housing. Complete compressor units with their drive motors are normally supplied to the air conditioner company by vendors who specialize in that type of component.

Electric motors, air filters, pulleys, belts, the expansion valve (capillary tube), sensors, control devices, knobs and fasteners are also purchased from companies who specialize in those particular components. Fan blades and squirrel-cage blowers are usually injection molded (4C) in one piece and press fitted on a splined fan motor shaft or held by a set screw. However, they may be made from galvanized sheet steel with appropriate punch press tooling and screw machine parts (3A2c) for hubs. Shaft bearings are of the pre-lubricated powder metal variety and most often are purchased from specialist suppliers. Fan shrouds and blower housings are also injection molded but may also be made from galvanized sheet steel. They are complex in shape and may have appendages that have structural, supporting functions and may separate the condensing section from the evaporating section of the unit. Other injection molded parts are the control panel parts, louvers, and the frame for the air filter screen. The screen is made by weaving wire or strands of high-melting-point plastic fiber into screening that, when cut to size, becomes an insert in the mold when the frame is molded (4C6), usually of ABS or impact polystyrene. Knobs and the control panel are hot stamped (4M2) after molding.

Brackets, supports, mounting base, and housings are all most commonly formed from sheet steel using blanking, piercing and forming operations though some are injection molded of plastic. Much of the sheet stock is galvanized (8F2) beforehand and supplied in coil form. Sheet metal operations, for high production air conditioner facilities heavily utilize progressive and compound high production dies. Larger, more specialized commercial application units, made in smaller quantities, utilize sheet metal parts made more often with shear (2C1), press brake (2D1a) and CNC turret punch equipment (2C5a). Sheet metal parts, when fastened together are joined by resistance welding (7C6) or, with high production window units, by projection welding (7C6c). External housing parts are cleaned and spray painted on automatic electrostatic painting (8D7) lines. Some parts are powder coated (8D8a) instead of painted. The catch pan for condensate is injection molded or, in some cases, is blanked and formed from galvanized steel sheet. If metal, a drain fitting and pan corners are soft soldered (7A2b and 7A1a) in place. A vinyl drain tube is attached with a spring clamp.

Final assembly of the components including torch and induction brazing of tubing connections, charging and testing of the unit are performed on an assembly line basis (7F2). See Figs. A2 and 7F2-2. The housing parts are fastened to the internal structure with sheet metal screws in pre-molded or pre-punched holes. Operation and leak testing are key parts of the final assembly sequence. Completed units are packed in individual corrugated shipping containers for storage and transportation to retail outlets.

aircraft, (airplanes) - (Note: Much of the following description covers the manufacture of large "transport airplanes", commercial airliners, and similar business aircraft. However, smaller com-

Fig. A2 An assembly line for the production of residential air conditioners. (*Courtesy Carrier Corporation.*)

mercial and private planes require most of the same manufacturing operations, with commensurate care, attention to detail, and quality control.) Large airliners are extremely complex assemblies of structural and functional components and external skin for the body, wings, stabilizer, elevator, rudder, and engine nacelle or cowling. Other key components are the propulsion engines; the landing gear system, including retraction, extension, steering and braking mechanisms; engine and flight control apparatus, including autopilot, instruments, navigation, communication and radar gear; windshields, anti-ice and rain protection systems, windows, doors, electrical power, lights, wheel brakes, fuel tanks, fuel distribution and fuel pump system, communication and radar gear; flight control surfaces, electrical wiring, hydraulic and pneumatic systems including tubing and flexible hoses, pumps for fuel and lubrication; fire protection system, emergency equipment, cargo handling system, passenger entertainment system, galleys, lavatories, water and waste systems; heating and ventilation, cabin pressurization and air-conditioning equipment; passenger and crew seating and interior finishing; and a multitude of sensors and gages to support the listed airplane systems. Commercial airliners may have as many as five million individual parts. Military aircraft also include armament devices and projectiles. Private planes, though they have less auxiliary facilities and equipment, are still highly complex products. Most of the above parts are contained in five principal components in current planes, each of which consists of at least one major subassembly: 1) the fuselage (body), 2) the propulsion devices - jet, turboprop or piston engines, 3) the wings, 4) the tail assembly, 5) the landing gear.

The tremendous quantity and range of variety of components needed in a modern aircraft, their necessarily high quality standards and the specialized skills and manufacturing processes needed, requires that the manufacturing tasks be spread beyond one factory and one company and even one country. Many components, such as engines, instruments, electric motors, electronic and hydraulic devices, and hardware, are made by vendor companies, sometimes in other countries.

Aluminum, in alloy form, is the major metal utilized in aircraft components because of its light weight. Aluminum sheet has formed the skin of modern jet aircraft, and aluminum forgings and machined parts have been used extensively. However, there is a revolution in process in the construction of commercial aircraft, replacing aluminum riveted structures with those made from reinforced plastic composites. (Where aluminum is being retained, much rivet fastening of the skin to structural members is being replaced by friction stir welding (7C13i). See Fig. A4.) The plastic composites consist primarily of carbon fibers in a matrix of high-strength epoxy thermosetting plastic. Fiberglass and kevlar fibers are also used and polyester and phenolic may comprise the matrix for some components. This composite construction enables designs that have less weight, greater strength, more corrosion resistance and a lower parts count than an aluminum structure, though at higher cost. As an example of the importance of composites, the materials content of the Boeing 787 airliner is as follows:

plastic composites - 50%
aluminum - 20%
titanium - 15%
steel - 10%
other materials - 5%

The aluminum, aluminum-magnesium alloys, titanium, steel, and other metal alloys that are used involve, in many cases, the most sophisticated and advanced alloys available. Military aircraft have even higher standards because of the high-temperature effects of high-speed airflow, the need for greater strength to withstand maneuverability stresses, and the shocks from use of armaments.

The development of composite plastic parts started with members that were less structurally critical such as nose cones. Smaller parts such as trim tabs and tail control parts were developed later. After these applications have been proven successful, the composite materials have been used increasingly in the fabrication of larger components. The entire empennage (tail surfaces) and floor beams of the Boeing 777 are composite and on the Boeing 787, wing and fuselage are also of composite construction. Fuselage "barrel" sections of approximately 22 ft (7 m) length and 19 ft (6 m) diameter, including structural stringers and skin are made of carbon reinforced epoxy construction.

The aircraft materials are formed into component parts by both traditional and advanced machining, forming, and joining techniques, as described in Chapters 2, 3 and 7. Critical structural metal parts are forged. Some of the more advanced and sophisticated metalworking techniques such as explosive forming, electrical discharge machining, chemical machining, electron beam welding, friction stir welding, and diffusion and adhesive bonding, are utilized in aircraft structural components because the requirements for strength, light weight and reliability are so severe. Conventional machining and joining techniques are also prevalent. Computer controlled manufacturing equipment (3U2) is extensively used because of its precision and reliability. The plastic components often involve a sandwich structure with foam plastics or honeycomb cores. (See *sailplanes* for more details on using composite construction in aircraft.) Filament winding (4G7) is employed for reinforced plastic construction of hollow components such as tanks and ducts. Pultrusion (4G11) is used for some composite structural parts. Special fixtures and jigs are used to control the assembly of structural components and many other subassemblies to insure their accuracy, correctness of assembly and fit to other components. Electronic systems (avionics) make maximum use of integrated-circuit technology. Quality control steps are numerous and are vital in aircraft component manufacture.

Final assembly for commercial aircraft and other airplanes produced in some quantity is on an assembly line basis. Fig. A3 shows such an assembly line. However, because of small production quantities and the extremely large number of components in the aircraft, movement of the planes from station to station is less frequent, and the work content at each station is greater than with lines for smaller and simpler products. The lines, however, are increasingly being established on a continuously moving basis with quicker throughput, fueled by a Japanese "kanban" approach that delivers components to the line just when needed, and avoids high stocks of parts. The parts fed to the final assembly line are often large assemblies in themselves, structural subassemblies, or major components such as engines, landing gear, doors, and navigation and communication equipment that may have been made elsewhere. Many of the subassemblies that are added at the final assembly line are, themselves, often assembled on lines, though simpler subassemblies and one-of-a-kind subassemblies may be put together at fixed workstations rather than on moving lines. For larger airliners, the fuselage is made up of a number of sections or "barrels", each a subassembly. Fixtures guide the manufacture of these subassemblies. In some plants, the fixtures are placed in a vertical position for convenience of use. All subassemblies are carefully inspected, gaged, and, where applicable, tested before they are moved to the final assembly line. Movement to a position on the assembly lines often requires overhead cranes.

Fig. A3 A "flow" final assembly line for aircraft used for business and personal flying. After the components specified are installed at each station, all the planes move to the next station for additional assembly work. (*Courtesy New Piper Aircraft.*)

The main airplane assembly, the combination of all these components, is held, in its earlier stages, in a large steel holding and supporting fixture. In addition to the joining of the large structural segments, various internal components and parts involved in the many systems of the plane are assembled to the main fuselage assembly. When the prescribed work has been completed at each station, the assembly is moved to the next station. Moving is accomplished by equipping the holding fixture with wheels, by using overhead cranes or, with the largest planes, by a factory-floor air-cushion technique. As each plane moves along the assembly line, it accumulates more and more major subassemblies. The parts and subassemblies for the various systems that involve wiring, hydraulic lines, ducting, control cables, and other interior and external parts are gradually added. Major subassemblies - the engine or engines, nose section, wings, landing gear, and doors, are also added and fastened in place, primarily with threaded fasteners or rivets.

The fuselage is normally the first major component to be put together on the final assembly line. For large commercial airliners, the fuselage consists of several major subassemblies: a nose assembly, a forward cabin assembly, a mid cabin assembly and a rear cabin assembly. (Smaller aircraft do not require this many subassemblies.) When these fuselage sections arrive at the final assembly line, they are essentially structurally complete. The mid cabin ("mid cabin barrel") subassembly is the first to be placed on the line. The rear bulkhead and wing attachment members are among the components assembled. After it is placed on the final assembly line, the forward cabin barrel assembly is moved into position and attached to the mid cabin assembly. The major assemblies are mated together using laser and other measuring equipment, indexing tools and holding fixtures to insure precision alignment of the fuselage sections. When one fuselage section is in alignment with another, they are joined together using rivets or other permanent fasteners. Sevral different joint structures are employed to fasten the large fuselage sections to one another. In one system, butt joints are used and they are reinforced with a circumferential lap joint ring. The ring extends around the junction area on the outside of the fuselage, and is fastened with "hi-lock" fasteners (high-strength, high-alloy fasteners engineered specifically for aircraft applications) to the two sections, and to internal stringers that connect them. Other designs use lap joints between fuselage sections. One manufacturing technique employed in the industry for joining fuselage sections uses a semi-automated riveting tool that is rotated around the fuselage circumference when the fuselage sections are being riveted together. Special equipment can punch the rivet hole, insert the rivet and clinch it, all in one operation.

The nose assembly with windshield, cabin door and pilots' cabin, assembled on a branch line, is next brought to the fuselage line and attached. It is positioned with the aid of a large locating fixture that has elements to ensure proper alignment of the sections. The rear cabin assembly, made off-line with the aid of an assembly jig, is then added to the fuselage, with the aid of the same large assembly fixture. The resulting fuselage, with these components assembled, becomes the base unit for final aircraft assembly.

Jet or turboprop engines are attached with supporting structures either to the fuselage or to the wings. (See *jet engines* for the manufacture of jet and turboprop engines.) Nacelle assemblies enclose the engines and provide air inlets to the engines, exhaust nozzles for the jets, and diversion channels to provide heating and pressurization air for the cabin and for deicing the leading edges of the wings. The highly-formed sheet metal nacelle parts are made with press operations or roll forming and are pre-assembled and attached to the engine structure after engines and their accessory fuel, ignition and control apparatus are in place.

Wings are assembled on the wing line. With aluminum wing construction, wing spars and ribs are fastened together and the skin pieces, like those on the fuselage are drilled, countersunk, and riveted to ribs and other frame members. The wing skins are chemically machined (3S1) to reduce thickness and weight in non-critical areas. Riveting is performed by automatic machines while the components are held in wing assembly fixtures. Some planes have a center wing section in addition to the left and right wings. The leading edge slats, ailerons, spoilers and trailing edge flaps have been fabricated with the aid of manufacturing fixtures, and are installed on the wing, typically after the wing has been joined to the fuselage. If the wings are made in three parts - left, center and right sections - these are bolted together in a fixture before the wing is assembled to the fuselage. Wings are fastened to the fuselage where mating structural members - wing spars and body frame members - come together. Large, high-strength metal pins connect the structural members. Various other high-strength fasteners: pins, special bolts and rivets, are all used to secure wings and structural components together in building an airplane.

The tail assembly or empennage consists of a fixed vertical stabilizer or fin with a hinged rudder to control yaw (aircraft turning), and a horizontal stabilizer with two hinged elevators to provide pitch control (up and down movement) of the aircraft. These components include spars, stringers, ribs and sheet aluminum skin, that are assembled with rivets, other fasteners, friction spin welding and/or adhesive bonding with the aid of assembly fixtures.

Landing gear assemblies, with retractable wheels at the wings and the nose of the plane, are assembled on separate lines and transported to the final assembly line for installation after the wings are attached to the fuselage. When the landing gear, wheels and tires are installed, the airplane can be moved on the assembly line on its own wheels.

The control systems are installed late in the assembly process on the final line after the large-size components have been attached. Rudder, elevators, flaps, ailerons and trim tabs may be installed on the final line rather than as part of the wing or tail subassemblies. The hydraulic and electrical apparatus involved in the flight control system are also installed at this point.

There are many other components and systems in the aircraft that have important elements installed after major components are in place. These include the windshield, avionic systems, cabin pressurization system, anti-ice system, emergency oxygen system, cargo handling system, etc. Interior work, such as installation of passenger entertainment systems, passenger cabin sidewalls, seats, galleys, lavatories, flooring, overhead luggage bins and cabin partitions, is performed at workstations near the end of the line, partly because these items are often customized for each customer. Exterior painting of the airplane is the final step in the manufacturing sequence.

Testing is particularly important in the aircraft industry because of safety issues and the possible effects of the failure of a basic aircraft system or of its subsystems. All subsystems are tested before assembly and the completely-assembled aircraft is tested as much as possible inside the final assembly building. Computer simulation techniques are used where possible to save costs and, more important, to uncover any defects at an early stage. Tests performed in the final assembly building include: avionics systems testing, leak tests on the fuel system, and pressurization checks to confirm the pressure integrity of the airframe, among many other tests. Then, after the plane departs from the final assembly building, extensive ground and in-flight testing takes place. Rigorous tests of many of the plane's systems through different operation modes are carried out. Corrections and adjustments are made, if necessary, before the new airplane is delivered to the customer.

Figs. A4, A5, and A6 show components of business or private aircraft in process of manufacture.

alcohol, denatured - is ethanol mixed with small amounts of unpleasant substances (camphor, wood alcohol, benzene, pine oil and kerosene) to prevent it from being used as a beverage. Its usefulness for industrial applications is not affected.

alcohol, ethyl (ethanol) - also known as grain alcohol, C_2H_5OH, is the alcohol contained in alcoholic beverages - wine, beer, whiskey, brandy, gin, etc. It is produced from the fermentation (12F) of sugars or

Fig. A4 Part of the cabin structure of a business jet aircraft. The stringers and ribs are fastened to the aluminum skin by friction stir welding (See 7C13i.) instead of with rivets. *(Photo courtesy Eclipse Aviation.)*

Fig. A5 The rear section of a business jet fuselage being assembled. Note that much of the aluminum skin is not fastened with rivets to interior stringers and ribs. Instead, it is fastened by friction stir welding. *(Photo courtesy Eclipse Aviation.)*

Fig. A6 One side of the major part of the cabin of a four-passenger private aircraft being moved into position for additional assembly. Note the light weight of the composite structure, permitting easy handling in the factory in addition to the flight advantages of such a structure. *(Courtesy Cirrus Design Corporation.)*

starches. Corn is the most common raw material. Black strap molasses is another. In Brazil, much is made from sugar carne. The yeast enzyme, zymase is used to convert these sugars and starches into ethanol. Carbon dioxide is a bi-product. After fermentation, the liquid is only about 7 to 12 percent ethanol. A series of distillations (11C1) increases the content to as much as 95 percent ethanol. Animal feed is a by-product of ethanol production from corn. Ethanol is also made for commercial applications by other methods. One process involves the hydration of ethylene derived from petroleum. Another process utilizes acetaldehyde made from acetylene. Ethanol's industrial uses include it application as an ingredient in lacquer, perfumes, synthetic rubber, explosives and many organic chemicals. Ethanol is used in automotive antifreeze, as the fluid in thermometers, and mixed with gasoline to produce gasohol.

alcoholic beverages - See *distilled spirits* or the listing for the specific beverage: ale, beer, wine, brandy, whiskey, rum, and vodka.

alcohol, isopropyl, (isopropanol or rubbing alcohol) - is a petrochemical, made from propylene gas. The propylene is treated with sulfuric acid followed by hydrolysis and distillation (11C1). Isopropyl alcohol is also a by-product of some fermentations (11F and 12J4). In addition to its medical use, it is a solvent for oils, resins, alkaloids and gums and is used in the manufacture of antiseptic solutions, soap, and acetone.

alcohol, methyl - also known as ***methanol*** or wood alcohol, CH_3OH, was traditionally made from the destructive distillation of wood (11C1g). Currently, methanol is most commonly made by reacting carbon monoxide and hydrogen with the aid of a catalyst: (See "reactions" in entry 11I.)

$$CO + 2H_2 \rightarrow CH_3OH.$$

Methanol is extremely poisonous for either drinking or inhaling. It is used as an antifreeze and as a solvent for lacquer, gums and other materials. Derivatives of it are used in the synthesis of plastics, drugs, dyes and perfumes. Methanol can also be used as a high-octane, clean-burning fuel.

ale - is a variant of beer produced with water containing calcium sulfate and from top-fermenting yeast. (Beer is made from a bottom-fermenting yeast.) Like beer, ale contains both malt and hops. The fermenting temperature for ale is higher than that used in the lager beer process. Ale is somewhat bitter, full-bodied and has a stronger hop flavor and higher alcoholic content than beer. See *beer.*

alloys - are blends of two or more elements, normally metals. (Plastics are also alloyed and some metallic alloys include carbon and other nonmetals).The usual manufacturing method for metal alloys is to melt, in one vessel, measured quantities of all the ingredients and then to stir or otherwise mix the molten mixture thoroughly. (See 11K3.) One or more of the ingredient metals may be melted separately before mixing. The initial melt may include already alloyed metals, particularly if scrap material is included in the original melt. If so, calculated amounts of pure metals are included in order to achieve the desired metal ratios in the alloy produced. Other alloying methods include powder metallurgy, which is the mixing of solid metal powders, pressing them and sintering the mixture, by heating it to a temperature just below the melting point. Another alloying method is ion implantation in a vacuum chamber.

Almost all commercial applications of metals involve the use of alloys because alloying ingredients can greatly improve the properties of a basic metal.

aluminum - is produced from the aluminum ore, bauxite, in two steps: 1) refining the bauxite. This produces alumina (Al_2O_3), and separates it from the oxides of iron, silica, and titanium that are in the bauxite. 2) producing aluminum from alumina by smelting.

Refining bauxite uses the *Bayer process*. The bauxite, crushed to powder form, is mixed with a solution of sodium hydroxide (caustic soda). The mixture is heated to a temperature of 300 to 480°F (150 to 250°C) under pressure for about 1/2 hour. The alumina dissolves in the caustic soda, forming a solution of sodium aluminate. The other materials in the bauxite remain in solid form and are filtered from the solution in a series of tanks with cloth filters. The solution is then treated in precipitation tanks by adding crystals of aluminum hydroxide. After several days, most of the alumina in the solution precipitates and collects on the crystals. When precipitation is complete, the solution is filtered (11C7a) to separate the liquid and the aluminum hydroxide crystals. The crystals are then heated at 2000 to 2200°F (1090 to 1200°C), driving the water from the hydroxide and leaving alumina in fine white powder form. Fig. A7 illustrates the processing of bauxite to yield alumina.

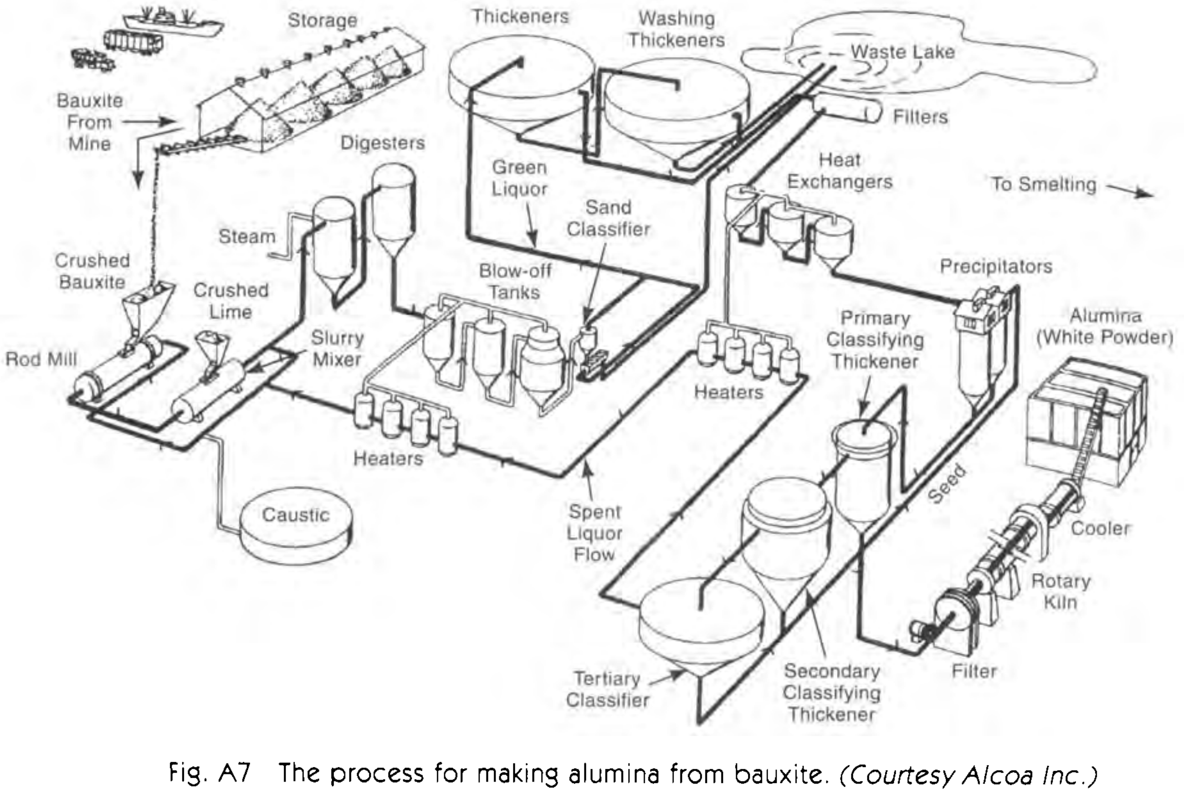

Fig. A7 The process for making alumina from bauxite. *(Courtesy Alcoa Inc.)*

In the Hall-Heroult smelting process, the alumina is dissolved in a chemical bath primarily of molten sodium aluminum chloride ("cryolite") that also contains aluminum fluoride and calcium fluoride. The tanks used are steel with carbon liners. The solution is heated to 1740°F (950°C). Carbon anodes, connected to a power source, are lowered into the solution. The lining of the tank is connected to the power source and becomes the cathode of a direct electrolytic circuit. Resistance to the passage of electrical current through the bath generates heat that keeps the bath molten. The electrolytic action separates the alumina into aluminum and oxygen. The oxygen combines with the carbon of the anode to form carbon dioxide gas. The aluminum, in liquid form, collects at the cathode, which is the carbon tank lining at the bottom of the tank. The process is continuous and many electrolytic tanks may exist in one factory. Periodically the molten aluminum is drawn off from each tank into crucibles from which it is poured into ingot molds. Alumina is periodically added to the bath to replace the aluminum that has been drawn off. The carbon anodes are eroded by the process and they are also replaced as necessary as the continuous operation proceeds. The cost of the electricity needed for the electrolysis is a major expense in the production of aluminum, leading to the location of aluminum smelters near dams that produce inexpensive hydroelectric power. Fig. A8 illustrates the electrolytic process and the casting of aluminum ingots.

Since recycling of scrap aluminum requires far less electrical energy than the processes for making aluminum from bauxite, there is a powerful cost advantage in utilizing recycled material. Much present-day aluminum comes from melting and

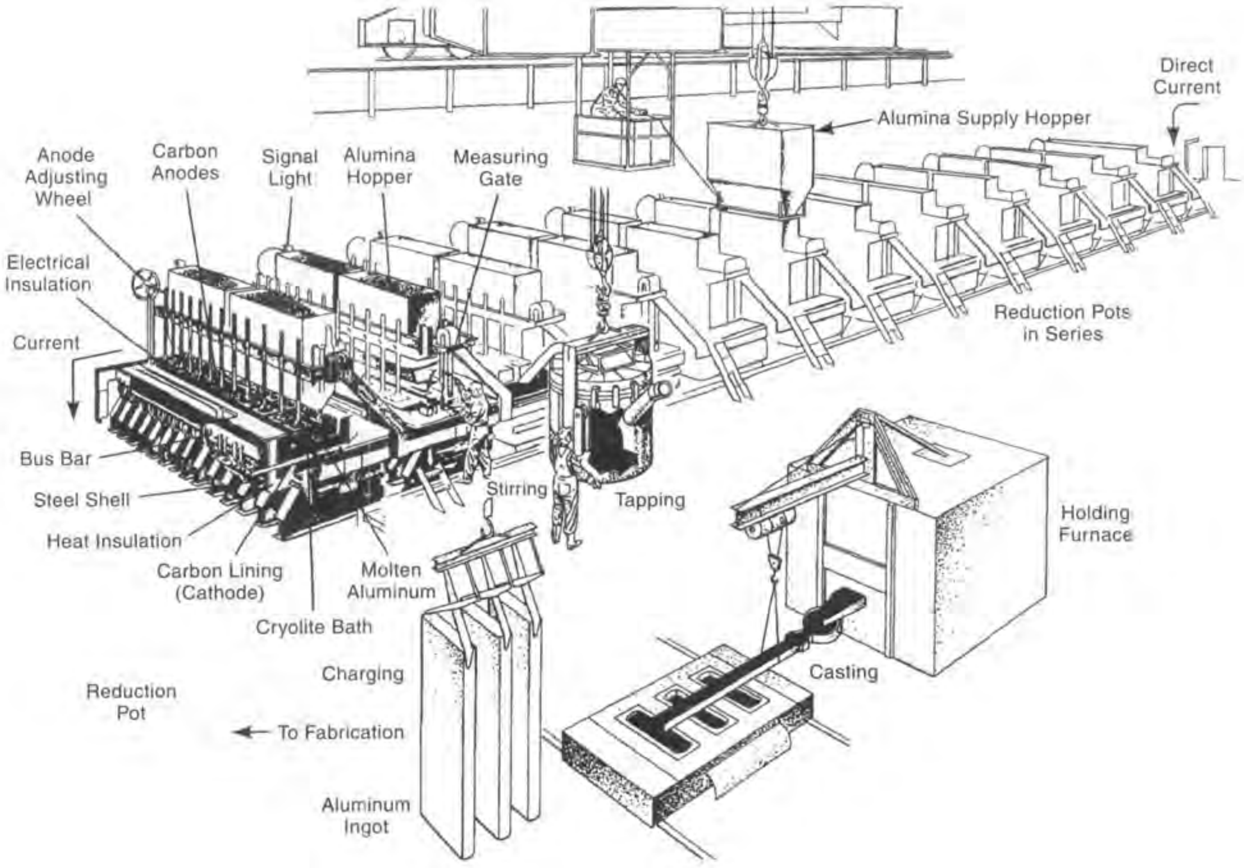

Fig. A8 The production of aluminum metal by electrolytic refining of alumina. *(Courtesy Alcoa Inc.)*

refining scrap aluminum, including aluminum beverage cans.

Aluminum's light weight makes it useful for applications where weight reduction is beneficial. Components for aircraft, railroad cars and automobiles are major applications. However, the greatest tonnage of aluminum is found in architectural and building applications: doors, windows, screens, downspouts, gutters, siding, and building panels. Aluminum has been used increasingly for electrical wires, despite its lower conductivity than copper because of its lighter weight and lower cost. Beverage can, cookware and foil applications are also significant.

aluminum foil - is made with one of two processes. In one, "reroll stock", large slabs of essentially unalloyed aluminum are annealed and then run through a rolling mill. In the other method, the foil rolling mill is arranged in line with the ingot casting equipment and the material then does not require annealing.

The rolling mill utilizes a pair of smooth-surfaced steel work rolls on parallel axes with parallel backup rolls providing support to each work roll against the high forces involved. The aluminum stock is passed several times through the rollers, which reduce the stock thickness and spread it to a longer length. Lubricants are added to the metal surface to facilitate the operation, and annealing may be required between rolling operations when the aluminum work-hardens. In each successive rolling operation, the thickness is reduced and the length is increased. Roll rotational speed is increased at successive stages. After the final rolling to foil thickness, the material is slit into the widths desired. It may then be coiled and packaged for use as foil or may be laminated or coated for use in other packaging or for other special uses.

aluminum oxide - See *abrasives.*

ammonia - NH_3, a gas, is made by the Haber-Bosch process, which uses direct synthesis of hydrogen and nitrogen at high pressures and temperatures. Ammonia also is produced as a by-product of coke production. It is used as a fertilizer both directly when liquified and applied to soil, and as a basic ingredient in the manufacture of solid fertilizers. Other applications include heat-treating steel, use as a refrigerant, and in the manufacture of explosives, plastics, and use in many chemical and other industrial processes.

antifreeze - The major antifreeze ingredient for automobiles and in other internal combustion engines, and for other freeze-prevention uses, is ethylene glycol. It has the desirable properties of low freezing point, high boiling point, and water solubility. In vehicle cooling systems, it is mixed with water and anti-corrosion and anti-foam agents. A 25% solution will lower the freezing point of water to −5°F (−21°C). Ethylene glycol is made from ethylene that is reacted with oxygen (often from air) to form ethylene oxide. This is purified and converted, by hydration, to ethylene glycol. Unreacted ethylene oxide, and other products of the reaction, are separated or reacted. A phosphate, nitrate or other agent may be added to provide anticorrosive properties.

Methyl and ethyl alcohol and propylene glycol are also sometimes used as antifreezes.

antimony - Sb, is found primarily as a sulfide in the ore, stibnite (Sb_2S_3). Two methods are in use to derive metallic antimony from this ore. In one method, the ore and scrap iron are melted in a furnace, causing the iron to react with the sulfur, forming iron sulfide in liquid form. It floats on top of the antimony, which also melts to the liquid state and can be removed from the bottom of the furnace. In another method, the stibnite is roasted to form antimony trioxide, Sb_2O_3. This material is then reduced to metallic antimony by heating it with carbon. Antimony is used as an alloying metal in the lead used in storage battery plates, with lead and tin as type metal and in babbitt metal used in bearings.

anti-shrink fabrics (cloth) - See 10F5a.

apple sauce - Apples are peeled, cored, and chopped. They are cooked in water, sometimes with the addition of sugar. The cooked material is passed through a fine-mesh screen, often through one of cylindrical shape. Paddles within the cylinder push the mass through the screen to a canning operation. Any seeds or large particles that do not pass through the screen fall to the bottom of the cylinder.

argon - is obtained from the liquification and fractional distillation (11C1a) of air. The first fractional distillation yields a mixture of argon, nitrogen and oxygen. The oxygen is removed by reaction with hydrogen and the hydrogen and remaining nitrogen are removed by a further distillation operation. Argon is used as a inert shielding gas for arc welding and various industrial processes including the production of silicon and germanium for semiconductors. Argon is used to fill fluorescent lighting tubes and other electric light bulbs.

asbestos/asbestos board - Asbestos is a name for not just one material, but for a variety of minerals that occur in nature as fibers. Fiber length, however, may be short. One of the more commonly mined minerals for asbestos is chrysotile, $Mg_6Si_4O_{11}(OH)_6$. Quebec is a major source; it is also mined in South Africa. The fibers in the ore are separated by several methods: air suction, crushing and vibrating screens. Fibers of about 3/8 in (10 mm) in length or longer are suitable for spinning and twisting into yarn for textile applications where temperature resistance is important. Shorter fibers are molded with plastic resins or portland cement into boards, pipe, brake linings, gaskets or with asphalt, plastics or rubber into felt. Use of asbestos is now restricted because of the adverse health effects of inhalation of the fibers.

asphalt - is a variety of naturally occurring bitumen and is also a by-product of petroleum refining. The material ranges from a highly viscous liquid to a solid substance. Venezuela, Trinidad and California have natural supplies of asphalt. When made from petroleum, asphalt is the by-product when more volatile components are removed from petroleum. A type of asphalt also results as residue after the distillation of coal. In natural deposits, it is believed to be a product of the decomposition of organic marine materials that later form petroleum. It is used for road pavements when mixed with sand and gravel aggregates. It is also used for roofing, pipe coating, sealants in water tanks, canals and reservoirs, floor tiles, paints and laminates.

aspirin - is acetylsalicylic acid, a solid. It is made from the action of acetic anhydride on salicylic acid, a substance that occurs in the bark of the willow tree and many other plants. The acetylsalicylic acid, corn starch, water, and a lubricant are the raw materials for aspirin tablets. The corn starch and (cold) water are placed in the same vessel and are stirred as the water is heated. When blended, the acetylsalicylic acid and the lubricant are added and are mixed thoroughly to blend all the ingredients and expel air. The blend is processed through a device that forms slugs of about an inch in diameter. These are forced through a screen to remove lumps and air pockets. The mixture is then blended and mixed gently with additional lubricant. Next it is fed to a tableting machine that feeds the mixture to small tablet-sized cavities on a rotary indexing table. As the table rotates, each cavity passes under a compression station where a punch descends and presses the material in the cavity to a solid tablet. At another station, as the table rotates further, the tablet is ejected from the cavity. (The action of the tableting machine is similar to that of the machines that compress metal powders when making powder metal parts (2L1c). The completed tablets are inserted into bottles by automatic machines that also insert cotton packing, attach a cap, attached a label to the bottle and insert the finished bottle in individual boxes, if used, and then into a shipping carton.

athletic shoes - See *shoes, athletic.*

automobile engines - are assemblies of many precision cast, stamped, forged, and machined parts, some of which are electroplated or painted. Except for specialty situations where only a very limited number of a particular engine is built, assembly takes place on an assembly line. Some portions of the assembly operation may be robotic or mechanized with special equipment. (See 7F3b and 7F3c.)

The basic engine block is normally an iron casting made in sand molds. (See *engine blocks.*) It is then machined extensively by milling, drilling, boring, reaming, grinding, and honing. The crankshaft is either forged (2A4) or cast (1B), and is turned (3A1a) and ground (3C1). Connecting rods are usually forged, bored (3B5) and honed (3J1). Pistons are sand cast or permanent-mold cast (1D1) of aluminum and turned on special machines. Valves are forged, turned, and ground. Camshafts are forged or cast, and turned and ground on special machines. Manifolds are cast and machined by milling (3D) and other operations. Machine screws to fasten parts together are usually cold headed (2I2) with rolled threads. (See *screw threads.*) Many other parts, made in the engine factory or purchased, are included in the assembly. These include parts that may be stamped from sheet metal (2C and 2D), die cast (1F), or molded from plastics. They also include spark plugs, electrical wiring, oil and air filters. bearings, seals, insulators, electronic ignition and fuel metering parts, carburetors, fuel injection parts, coils, drive belts, and pulleys. After assembly, the engine is tested for correct operation and power at a test stand. If satisfactory, it is moved to the final assembly line for installation in an automobile. Due to the high production volumes that typically accompany automotive production, many of the parts making operations are highly automatic and engineered specifically for the component in question. Special machines and transfer lines are often part of the parts-making operations. (See 3X and 3Y.)

automobile bodies - Auto body parts are made from sheet steel although, increasingly, fiberglass reinforced polyester plastic and formed thermoplastic sheet parts (4D) are finding their way into current designs. With the sheet steel parts, blanking, forming, and deep drawing operations are performed (See 2C4, 2D4, 2D5). These operations are performed on high-production equipment with compound dies (2E3) and progressive dies (2E1), where applicable, with robotic unloading of the stamped parts (14G4). Body parts are fastened together by resistance welding (7C6) and some arc welding (7C1), most of it robotic (14G6). Weld joints are made smooth by application of high-lead body solder, sanded smooth. The welded body assembly is dipped in a cleaning bath and then given a zinc phosphate treatment (8E2) to aid in corrosion resistance. Plastic sealers are applied in locations where moisture can be trapped. The complete metal body assembly is then painted. The first coat is often applied with the electrophoretic method (8D9), dipping the body into a vat of water-based paint. The selected color is often applied with robotically-manipulated, electrostatic paint guns (14G7), with some manual spray application to selected or difficult-to-cover areas. A final clear coating is applied similarly, and is buffed and polished after it dries. Sound deadening materials are applied in some areas with rubber-based adhesives. A polyurethane coating is applied to the bottom surfaces to provide protection against flying stones, gravel and other debris. After painting, doors, deck lids, hood, trim, windows, doors, bumpers, interior panels, the dashboard with instruments, seats, lights, radios, speakers, carpeting, and various hardware items are assembled to the body as part of the final auto assembly operation. The body is then conveyed to the main assembly line where it is assembled to the other components that make up the car. (Also see 14G14a.)

automobile chassis - the steel frame that supports the car, is used in many automobiles. However, the more common auto designs now incorporate a unitized body. With the unitized design, extra members are added to the body to enable it to support the weight of the vehicle and to withstand road shocks. The supporting members then, are in the body assembly rather than part of a separate chassis. Where a separate chassis is used, it is made from heavy gauge sheet steel that is blanked, formed, and hole-punched. It is assembled and arc welded with other similarly-made chassis components into a strong and rigid assembly. Even with a unitized body, however, there normally is a sub frame, similar to the earlier chassis but only in the front of the vehicle, to support the engine, transmission, and front suspension. In many designs there also is a small rear frame to support the rear axle, differential, and suspension. These frames are also made of heavy gage steel stampings, welded together. The net effect of the unitized body construction is a reduction in vehicle weight.

automobiles - are highly complex assemblies, consisting of about 14,000 or more parts, in many subassemblies and systems from many different suppliers. Automobiles are produced in large quantities. The production process for automobiles consists of the manufacture of all the individual parts, including their finishing with heat treatments, plating and painting, if used, their assembly into various mechanical subassemblies, followed by the combination of all these subassemblies and parts into a finished vehicle. Since the days of Henry Ford's Model-T, line assembly methods (7F2) have been used for the final assembly of automobiles. In principal, this is still true, but the present-day assembly line is far more automatic and the products produced on it are much more variable, from car to car, than the early lines of Ford. Automatic and robotic equipment is interspersed with human assemblers. Many of the components assembled on the line are subassemblies that were, themselves, manually assembled on lines with some interspersed robotic and automatic assembly stations. Examples of these subassemblies are the chassis, body, bumpers, fuel pumps, piping and tank, radiator, suspension system, seats, engine, transmission, drive shaft, rear axle, wheel assemblies, instruments and instrument panel assembly, steering system, brake system assemblies, electrical wiring, battery, generator or alternator, starter, headlights and interior lighting system, as well as auxiliary equipments such as air conditioning, radio, stereo, and cruise control. Fig. A9 shows the assembly of dashboards and accompanying components. All these subassemblies and many parts are delivered to the point on the assembly line where they are needed.

Some subassemblies are put together completely with dedicated (special purpose), high production equipment, others with a combination of robotic and dedicated equipment, with or without manual assembly of some components. Robotic operation is common for such operations as welding, painting, windshield assembly, and placement of heavy components like the engine, transmission and body assembly. (See Chapters 14 and 14G14a.) Fully automatic assembly with dedicated equipment is most common with components such as spark plugs, hydraulic brake cylinders, shock absorbers and other subassemblies that are used in multiples in the car. (7F3b)

Fig. A9 A subassembly line for automotive dashboards. The fixture in the foreground holds the dashboard in an upside-down position, in which wire cable bundles, instruments, air bags, controls, a central console and other components are attached as the fixture moves along the line. *Photo courtesy of General Motors.*

The assembly line starts with the attachment of the chassis to the assembly line conveyor (if the car being assembled has chassis rather than "unibody" construction). As the chassis moves down the line, components such as wheels, suspension systems, steering and braking components, and gas tanks, are added. Major stations on the final assembly line involve the joining of the chassis and body (the "body drop"), if that type of construction is used, and the assembly of the engine, transmission and drive train to the body or chassis.

Much of the assembly involves permanent joining of the constituent parts by welding, brazing, soldering or adhesive bonding. The body, chassis, muffler and fuel tank are components that are permanently assembled, mainly by welding. Permanent assembly also makes for a quieter operation of the car. Other assembly is carried out with mechanical fasteners or other fastening methods that can be reversed so that the assembly can be taken apart for maintenance or repair during the life of the vehicle.

Final operations on the line involve the assembly of trim, and the addition of a spare tire, fuel, and antifreeze. Then the assembled vehicle leaves the conveyor; the engine is started, and lights, horn and accessories are tested. Adjustments are made; defects are repaired and, if the vehicle meets the quality standards, price and shipping labels are attached. Fig. A10 shows a typical automobile final assembly line in operation.

automobile windshields - consist of curved pieces of safety glass. The glass is made with the methods described in chapt. 5, section A1, with raw materials including potassium, magnesium, and aluminum oxides, in addition to the more common materials, to provide hardness and other properties. The molten glass is fed to float glass equipment (5A3f) to produce a large, flat glass sheet. Each sheet is cut into smaller, windshield-size sheets. These are then bent to the desired curvature by heating them and draping them over a form of refractory material. Gravity, and the softness of the

Fig A10 An automobile final line: Cars placed sideways on this portion of the line move past workstations where interior, trunk, hood and door components are installed. The conveyor, referred to as the "skillet", sits above the floor and operators can adjust its height for optimum ergonomic conditions. (*Photo courtesy of General Motors.*)

heated sheets, causes them to take the shape of the form (5A5a). The bent sheet is tempered (5A4b), cleaned and assembled with an internal layer of plastic and a second layer of glass. (See *safety glass.*) These three assembled pieces are placed in an autoclave, which provides pressure to force the three layers together and heat to bond the plastic to the glass surfaces. The finished windshield then undergoes a plastic injection molding operation where it becomes an insert in an injection mold and a plastic frame is molded around it. (Insert molding is described in Chapter 4, section C6.) The windshield is then ready for shipment to the automobile assembly factory.

B

bacon - American bacon is made from hog bellies, Canadian bacon from pork loin and European bacon from the ham and shoulder. The meat is rubbed with several possible ingredients: salt, sugar, sodium nitrite, sodium phosphate and sodium erythorbate, or they are dissolved in water and the meat is soaked in the resulting brine. Another approach, common for commercial bacon, is to inject the brine uniformly into the meat with a multiple-needle machine. This step is followed by smoking at a temperature between 130 and 140°F (55 and 60°C) for a period of 2 to 10 days. Chilling, forming into slabs, slicing and packing operations follow.

bags, paper - The typical brown paper grocery bag is made from kraft paper (See 9C5), on special machines. The machines work on rolls of wide paper, to print, slit, cut and fold the paper, glue the seams, and stack the completed flattened bags.

bags, plastic - The initial manufacturing process is film extrusion (4I5) to form the bag body. Zipper-type closures are extruded (4I1) in two pieces, cut to length with shears, and joined to the bag sides with radio frequency sealing (4L9). Radio frequency sealing also joins the two sides of the bag at the bottom. Because of the high volume production of such bags, producers have developed automatic production equipment that performs all these operations and packages the bags in chipboard boxes, all without the bags being touched by human hands.

baking powder - is most commonly a dry mixture of sodium bicarbonate (NaHCO3) with one or more agents to completely decompose it, and a drying agent such as corn starch or flour. A major decomposing agent is monocalcium phosphate. Under heat and moisture, the baking powder decomposes to produce carbon dioxide for leavening of bread and other baked goods. Baker's yeast performs the same function in leavened baked goods, but works more slowly and by fermentation rather than decomposition (See bread and 12G7).

ball bearings - have four main parts: inner and outer grooved raceways, rolling balls and a retainer or cage to hold the balls in the raceways. Except for the cages, the parts are usually made from 52100 high-carbon, high-chromium steel, or 440C stainless steel if corrosion resistance is needed.[9] The steel raceways are machined on lathes or screw machines (3A2c) from heavy-wall steel tubing, heat treated for hardness (8G3c), and finish-ground both internally and externally (3C1 and 3C2). The rolling surfaces for the balls are then lapped (3J2) to a near-mirror finish. The balls are made from heavy wire. The first operation is shearing the wire and forming a ball shape in cold heading (2I2) machines. Flash from cold heading is removed in special automatic machines where the balls roll repeatedly between two grooved cast iron disks. The balls are hardened and tempered and then ground to nearly perfect sphericity and accurate diameter in special grinding machines. They are then lapped to a fine finish. The retainers are steel stampings made with progressive dies (2E1), or may be injection molded (4C) from a plastic. The components are assembled, lubricated and tested before shipment.

ball grid arrays - See 13F.

ballpoint pens - are of many different designs. The simplest designs are produced by the million, with dedicated automatic production machines, and are assembled "untouched by human hands". The components of a simple, low-cost pen are as follows: a ball that rotates during writing, (It has a textured surface to aid in retaining and spreading ink to the paper.), a brass part that holds the rotating ball, an ink reservoir tube, a spring to retract the ballpoint when it is not in use, an external body for the pen, a pushbutton device at the top of the pen to extend the point when needed, a cap for the top of the pen with a center hole and bearing surface for the pushbutton device (The cap usually includes an integral clip to hold the pen in a shirt pocket.). There is also a small plastic part that fits inside the body and holds the ballpoint in the extended position after it is moved by the pushbutton. Ink, in paste form, is held in the ink reservoir.

The ball points are made of tungsten carbide using powder metal methods (2L1). The brass part that holds the ball point is made by cold heading (2I2) or by screw machining (3A2c). This part contains a recess for the ball and, after the ball is placed, is crimped at the end with just enough deformation to hold the ball but not prevent its rotation. The ball assembly is press fitted into the extruded (4I1) polyethylene ink reservoir. Ink is a blend of pigment, lubricant, surfactant and thickener, mixed on a batch basis. Heating or cooling may be part of the mixing operation, depending on the ingredients used. The body of the pen, the top and the clip, the pushbutton and the inside plastic part are all injection molded (4C1). The spring is a compression type, wound on conventional spring-winding machines of steel spring wire. (See *springs.*) The ink reservoir tube is deformed a small amount at one point to provide an end bearing surface for the spring. Deformation is done with a heated press forming die. The ink reservoir is filled by a special machine and the parts are then assembled automatically on special dedicated machines (7F3 and 7F3b).

balls, athletic - See *baseballs, footballs* and *golfballs* for representative construction and methods.

banknotes - See *paper money.*

bar codes - are binary renditions of a series of numbers. They are used for identification and are printed on products, packaging, or labels by a variety of methods depending on the quantity to be printed and the surface to be printed on. Short-run or individual quantities are printed by regular computer ink jet or laser printers. Larger quantities, as required for supermarket products, are printed by various high-quantity methods discussed in Chapter 9. Some companies are in the business of supplying preprinted bar code labels. They use conventional printing processes as well as some specially adapted for high speed printing of labels, including those with sequential numbering or other variable information. Machines are also available to print bar codes directly on a product package or carton rather than on a label.

In a typical bar code, the presence or absence of a bar and the bar width are interpreted by an optical scanner to represent a series of binary digits. The digits are then fed to a computer for processing. For identification of common products, such as those sold in grocery or other retail stores, a Universal Product Code (UPC) is used where the first five digits represent the manufacturer or supplier of the product while the second five digits identify the specific product or component. Similar standard coding systems are in use in different countries. Bar codes are used in retail pricing, for inventory control at the retail, wholesale and manufacturing level, to track lots or individual pieces in a factory and to track books in a library and parcels during shipment.

baseballs - Spherical centers, about 0.8 in (2 cm) in diameter, cut from cork and machined for roundness and size, are wrapped or molded with a layer of black rubber and then with a layer of red rubber to a diameter of about 1.3 in (3.3 cm). A thin layer of adhesive is then applied to the surface, and multiple layers of wool yarn are wrapped by machine around the rubber. Constant tension is maintained on the yarn during winding. When it has been wrapped to the specified diameter, the ball is wrapped again, this time with a layer of cotton yarn that gives the finished ball a smoother finish. The yarn-wrapped balls are then dipped into a bath of latex. This bonds the yarns together. Two cover pieces of a figure-eight shape are blanked from leather, given a coat of latex adhesive, and stapled to the wound ball. The seams are stitched by hand around the ball, using a two-needle method and a standard stitch pattern of 108 stitches. (Machine sewing for this operation has not been developed.) Fig. B1 shows the construction of baseballs used in the major leagues. The staples are removed and the sewn balls are rolled in a machine for a few seconds to press down any raised stitches. The balls are

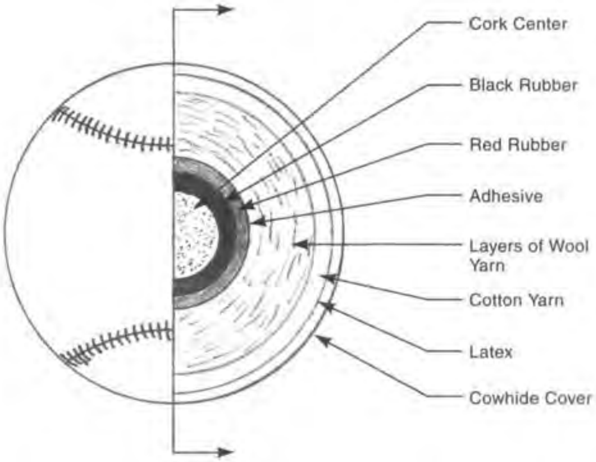

Fig. B1 Section view of the construction of a major-league baseball.

inspected, confirmed to meet the specified weight of 5 to 5.25 oz (142 to 149 g) and circumference of 9 to 9.25 in (22.8 to 23.5 cm) and stamped with identifying designations.

bathtubs, cast iron - are made from gray iron cast in sand molds (1B). After casting and shakeout, the tubs are snagged (1B8g) and may be annealed (8G1). Drain holes are drilled (3B1) and some surfaces are machined (3D). Then all surfaces that will be visible are prepared for application of vitreous enamel (8F1). The first step is grit blasting (1B8c) to remove sand, rust, scale, and dirt. Then the surfaces are smoothed with manual polishing wheels (8B1 and 8B1a). The enamel application is by powder spray or fluidized bed coating, wet spray, wet dip, or flow coating. Powder application is followed by drying and firing. Then a second coat is applied and fused by firing. After quality checking, the bathtub is crated for shipment. Cast iron bathtubs are heavy but solid, and have very good sound deadening properties. Also see 5A5i and *enamels, vitreous.*

bathtubs, plastic - can be made by several different methods. Frequently, fiberglass reinforced thermosetting polyester is used, with the spray-up (4G2) or hand lay-up (4G1) methods. The molding operation preceded by a spray application of a gel coat of the polyester to insure a smooth surface. Another fiberglass method is compression molding with sheet molding compound (4G10). Trimming and hole punching follow these molding operations. Oven heating of the molded tubs may take place to further cure the polyester resin. When high-tonnage, large-platten, injection molding machines are available, tubs can be injection molded (4C1). Common materials used in injection molding are ABS or acrylic thermoplastics, often incorporating glass or other reinforcing fibers, fillers and pigments.

bathtubs, steel - are made from drawing quality, low-carbon sheet steel. One or more deep drawing operations (2D5b) may be required and the workpiece may be annealed (8G1) between draws. Holes for drain fittings are punched with suitable dies after deep drawing. The tub is then annealed to remove stresses from the drawing operations, is shot blasted (8A1b) to remove any scale or other soils, is vapor degreased (8A2a3), and then further degreased with an alkali rinse (8A2d). It is then acid pickled (8A2f) to prepare the surface for vitreous enameling. The enameling and finishing operations proceed as described above for cast iron bathtubs.

bats, baseball - Pennsylvania and New York ash is the wood used for making professional baseball bats. The wood is selected for straight grain and freedom from knots, and is cut into 40 in (1 m) lengths. These are split into pieces of the approximate width and thickness needed for bats and are called "splits". The splits are rough turned (3A1a) to round cylindrical shape and are then known as "billets". They are checked again for proper grain and are usually bundled for shipment to another factory for completion.

At the new location, the billets are dried outside for a period of 6 to 24 months to lower the internal moisture content to the proper level. They are then lathe turned (3A1b) and sanded to near-final bat shape. When ordered for a specific player's preference, they are final turned on a CNC lathe (3T1) programmed for that player's specification. They are sanded, branded (8I8) with the trademark and player's name, stained, if necessary, varnished, and packed for shipment to the team.

batteries, flashlight (dry cells) - The traditional flashlight dry cell is made of a zinc cup (as a cathode) carrying zinc chloride, ammonium chloride, and graphite in moist paste form as an electrolyte, and manganese dioxide as a depolarizer, with a carbon rod in the center as the anode. Starch or flour is used as a gelling agent in the electrolyte. The zinc cup is deep drawn (2D5b) from sheet stock. The carbon anode is compression molded (4B1) from carbon

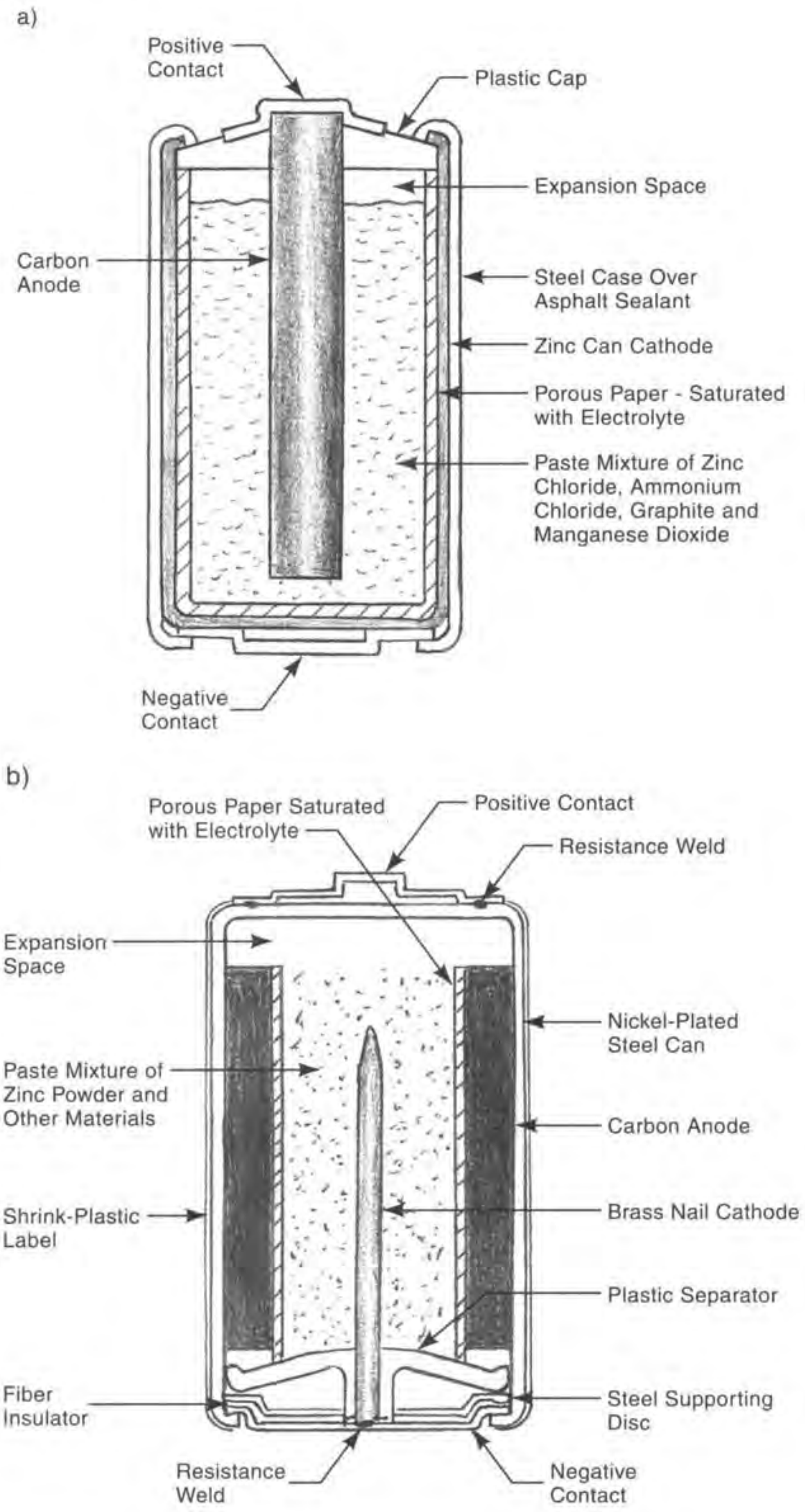

Fig. B2 a) Section view of a typical carbon-zinc battery (dry cell). b) Section view of a typical alkaline battery.

powder and a bonding agent. The electrolyte and depolarizer are made into a paste from the powdered material and water. The zinc can is lined with cardboard which is soaked in ammonium chloride and zinc chloride solutions. The assembly is sealed to prevent escape of the electrolyte. An injection molded (4C1) plastic top cover isolates the anode from the zinc cup and holds a brass or nickel-plated steel electrical contact cap to the carbon anode. Space is allowed between the top cover and the material in the can to allow for expansion. The can is crimped to the top cover. For additional sealing, another top cap and a bottom cap are blanked and formed (2C4 and 2D2) from nickel electroplated (8C1) steel stock. A steel covering for the can, coated internally with asphalt, may be used to further seal the entire battery so that, if the zinc can is penetrated by the electrolytic action that feeds on it, there will be no external leakage. The steel covering also holds the top and bottom caps in place. The sheet steel for the cover is lithographed (9D2a) with product and brand identification before it is blanked. The electrolyte mixture is normally made in a batch mixing process (11G4), but all assembly and sealing operations, including forming of the cover and making rolled cover joints, are carried out in dedicated automatic equipment. Some carbon-zinc batteries are made with an inside-out construction where the zinc cathode is an internal element and a plastic coated paperboard (9C3 and 4I4) container (inside a steel cover) holds the electrolyte. Alkaline, lithium, and rechargeable batteries use different combinations of electrolyte, electrode materials and containers.

In alkaline batteries, "alkaline" refers to the electrolyte, which contains potassium hydroxide. The cathode consists of a brass nail that is surrounded with a paste of zinc powder, potassium hydroxide and other materials. The drawn-steel can that contains the battery, lined with a carbon-containing sleeve, becomes the anode. A layer of porous paper, wet with the potassium hydroxide electrolyte, separates the anode and cathode materials.

The anode liner of the can is a mixture of carbon black (graphite), manganese dioxide, potassium hydroxide solution and starch or flour. The liner is pressed or extruded into a cylindrical shape and inserted into the nickel-plated steel can that contains the battery. A suitably shaped disc is welded to the can end to provide the anode terminal.

The brass nail head is resistance welded to a plated steel disc that becomes the cathode terminal of the battery. An injection-molded plastic part, and a paper fiber disc, electrically isolate the cathode terminal and the nail from the can surface. The plastic part is pressed into the steel container. Expansion space is provided at the opposite end of the steel can. The open end of the can is crimped and sealed over a steel supporting disc and a plastic sealant. A vinyl shrink label is slipped over the can and shrunk to fit tightly. All assembly operations are performed on automatic equipment.

Fig. B2 illustrates both the carbon-zinc and alkaline batteries. These batteries (dry cells) are also used to power toys, portable radios, cameras, tape recorders, electric razors, television remote controllers and many other electrical and electronic devices.

The mercury cell, used for small electronic devices such as hearing aids and wristwatches, has a zinc cathode, an anode of mercuric oxide, and an electrolyte of potassium hydroxide.

bauxite - See *aluminum.*

beams, plastic, reinforced - Plastic structural members also include channels, angles and squares, and are normally made with glass or other fiber reinforcement to provide the necessary strength. The pultrusion process (4G11) is used, and parts are then cut to length by abrasive saw (3G5). These members are used where light weight and corrosion resistance are important.

beer - The major ingredient in most beers is barley, and the first step in making barley-containing beers is to convert the barley to barley malt. To do this, barley grain is softened by soaking it in water until it starts to sprout. Then, it is dried in a kiln. The grain is then milled between parallel rolls that break the brittle, modified starch into small pieces without breaking up the husks. Malting contributes to the desired flavor and provides needed enzymes. Barley malt, thus produced, is mixed with water, hops, and yeast, and usually with other grains such as rice and corn. Hops add bitterness to the flavor and add control to the later fermentation. The water dissolves starches and other molecules and enzymes that result from malting. The enzymes start to act on the other ingredients.

The malt-grains-water mixture is heated in a process called mashing, performed in a vat called a mash tun. Processes vary with different ingredients and different breweries, but they always involve heating the mixture, often to temperatures around 150°F (65°C). This temperature is held is for an hour or more. This heating, through the action of the enzymes, converts the starches in the grains to sugar and other carbohydrates. The mash liquid is known as wort. The wort is filtered slowly to remove husks and other solid materials. The resulting liquid is boiled to sterilize it, stop enzyme activity and, with added hops, enhance the beer's flavor. The next step is fermentation (12J4), changing the sugar into alcohol. When the desired degree of fermentation has taken place, the beer is filtered to remove yeast residue, and aged for several weeks to further improve its flavor. It is then filtered (12E1) again, possibly pasteurized to kill any residual microorganisms, and bottled, canned, or put into kegs. (For some "draft" canned beers, microfiltering replaces, pasteurizing.) Fig. B3 illustrates the brewing sequence.

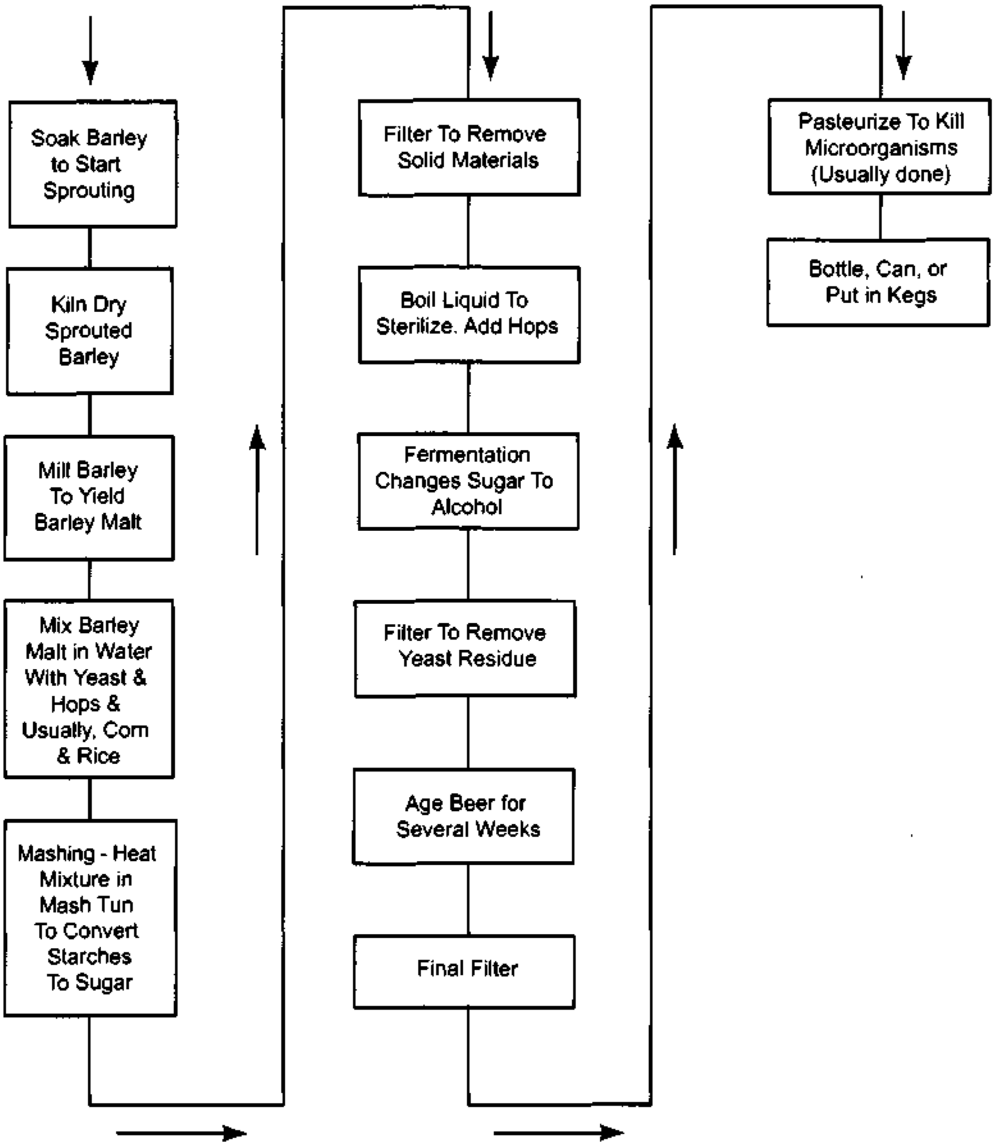

Fig. B3 The sequence of operations involved in beer brewing.

bells[3] - Bells of the traditional shape are cast from bell metal, a bronze alloy, normally four parts copper and one part tin, although zinc, lead and silver are sometimes used. Sand molds are used (1B). The first step is to make the core, the mold for the inside surface of the bell, which is done by rotating the sand and shaping it with a sickle board. Then a clay pattern of the bell is formed over the core sand. Any lettering or design pattern for the exterior of the bell is made from wax and attached to the clay pattern. Lettering is in relief (raised). The next step is to make the cope, the mold for the outer surface of the bell. The cope is built up over the pattern. A thin mixture of clay is used for the surface, particularly where there is lettering and the balance of the cope is made from a thicker sand/clay mixture. The molds are then dried and baked. The heat from baking melts the wax lettering but leaves cavities for it on the cope half of the mold. The cope is lifted off and the clay pattern is removed. The cope and core halves are then reassembled and fastened. Melted bronze then can be poured into the cavity. After the casting has solidified and cooled, the mold is removed; the bell casting is snagged (1B8g) and sand blasted (1B8c), and sometimes machine trimmed in a lathe (3A1a). Trimming can adjust the pitch of the bell. For large bells, vertical lathes are used.

bent wood components - See 6D.

bicycles - Most bicycle frames are made from arc welded (7C1) assemblies of welded steel tubing. (Racing bicycles and others of light weight may be made from aluminum tubing, or tubing made from pultruded plastic reinforced with carbon or other fibers). Metal tubing components are bent and formed with conventional tube processing methods (2H2). Some drilling, boring, and reaming (Chapter 3) operations are performed. The head frame and frame member containing the sprocket shaft bearings are bored (3B5) and reamed (3B4), after welding. Some frame parts are formed into curved and partially-flattened shapes by press operations (Chapter 2). After the frame is welded, it is heat treated to anneal the welds (8G1). Handle bars are bent from steel tubing. Sprockets are blanked from steel plate (2C4) and, like handle bars and some other bicycle parts, are polished (8B1), buffed (8B1a), and electroplated (8C1). Wheel hubs and wheel shafts and most fasteners are made on automatic screw machines (3A2c). Pedal arms and various gear shifting parts are forgings (2A4). Wheel rims are contour roll-formed (2F7) and three-roll bent (2H2f) to the correct cross sectional and circular shapes before the ends are welded. Chain guards, wheel and seat parts and other smaller parts are stamped from sheet steel (2C, 2D, 2E). All parts are cleaned (8A) and either painted or are polished and chrome electroplated. Frame painting is often electrostatic (8D7) with an enamel coat followed by clear coating. Wheel spokes are made from drawn (2B2) and plated steel wire, straightened, cut to length and formed at the ends, as necessary. Wheels with spokes and hub are assembled (7F1) and adjusted to run true. Chains are assemblies of stampings and screw machine parts. Seats, tires, ball bearing assemblies, and threaded fasteners are supplied from companies that specialize in these components. The bicycle is put together on an assembly line (7F2) where parts are added as the bike moves down the line. Decals and nameplates are also added. For compactness in shipping, handle bars, pedals, and seats are usually not part of final assembly, but are often installed by the dealer. After final testing and inspection, the components and the main assembly are wrapped and inserted in corrugated cartons prior to shipment.

bills, dollar, and other paper money - See *paper money.*

bleach - Household-strength chlorine bleach is commonly an aqueous solution of 5.25% sodium hypochlorite, NaOCl. The sodium hypochlorite is made from caustic soda (NaOH), chlorine and water. The chlorine and caustic soda are made by electrolysis (11C10) of a salt solution (See *chlorine.)* and initially kept separate. The chlorine, in liquid or gaseous form, and the caustic soda, dissolved in water, are reacted together, either in a large batch reactor or in continuous process equipment, to produce the sodium hypochlorite. The solution is cooled, filtered (11C7a), and bottled (12L) for shipment. In lower concentrations, sodium hypochlorite is used to disinfect water to make it potable. Hydrogen peroxide, another liquid sometimes used as a household bleach, is also used as a disinfectant. Calcium hypochlorite, chlorine, sodium hypochlorite and hydrogen peroxide are all used as industrial bleaches. Major applications are in the paper and textile industries.

blue jeans - are made with conventional garment-making methods (10H) from blue-colored denim fabric. See *denim.*

boats, small, plastic - Small plastic boats, if not made with fiberglass (See below.), are most often thermoformed (4D). Various mechanical assembly operations (7F) to add such items as seats, oarlocks, and other hardware, are performed after the shell is formed.

boats, fiberglass - Fiberglass reinforced boats are made by the hand lay-up (4G1) or spray-up (4G2) methods. Mechanical assembly (7F) of hardware and seats follows.

bolts (machine screws, cap screws, set screws) - can be machined (cut) on lathes and screw machines but almost all standard commercial bolts and machine screws are made by forming rather than machining. Round stock of a formable grade of steel (or other metal if steel is not used), usually coiled, is the raw material. The first operation is cold heading (2I2) which cuts a blank piece to length and imparts the basic shape. The head is formed to its hexagonal, square, or round shape, with slots or recesses, if used. Then the bolt blank is tumbled (8B2) and fed automatically (usually by vibratory feeder) to a thread rolling machine where the screw threads are formed (3E7). The screws are then cleaned (8A), barrel electroplated with zinc (8C and 8C3) and given a chromate conversion coating (8E3). These coatings improve appearance and corrosion resistance. Sometimes, black oxide (8E4) or other surface treatments may be applied.

books[3] - Production of books requires a series of operations in addition to the writing, editing, format designing, and related manuscript preparation operations. Current practice makes extensive use of computer-based techniques, not only for these activities, but also for plate making for printing and, in some cases, where quantities of the finished book are limited, for the printing also. These methods are in contrast to the traditional system wherein a text manuscript and illustrations were combined by manual methods to make a master copy of each page with the desired type fonts and layouts. These are sometimes called "pasteups" or "mechanicals". In the traditional system, the master is photographed and used to make a plate for offset lithographic printing, as described in section 9D2a. Offset is the printing process normally used for books and both sides of the paper are printed in the same operation. 8, 16, or 32 pages are typically grouped together to print multiple pages at a time in an arrangement that allows shearing and folding equipment to complete a section of the book. These groups of pages are called "signatures", and are collected with others to form the complete book. The folded signatures are fastened together by gluing or stitching along the spine. A reinforcing gauze is often wrapped around the spine to add strength. End sheets for the front and back of the book are attached. The book block is then trimmed in a machine that shears the pages to the desired size.

If the book is to have a hard cover (called a "case"), it is made from heavy cardboard, covered with cloth or a special paper. The cover is printed, hot stamped, or embossed, or processed by a combination of these operations. The process of adding the cover is called casing-in, and may include applying a headband, a cloth band applied at the top and bottom of the book block spine, rounding the cover, and further application of adhesives (usually of the hot melt type). The case is applied by a machine which feeds it from a hopper, applies adhesive to the endsheets and presses them in place. The hinges for the covers are hot formed into the cover after it is attached. Lastly, the paper jacket may be added to the book and it is placed into a shipping carton with others.

When electronic processes are used, word processing or desktop publishing programs can provide a page master with illustrations, tables or other non-text material, if any. Plates can be made directly from the computer, and can include grayscale photographs without the need to make a photo master of each page. If illustrations or text are in color, color separations can be prepared by computer. The computer can also develop and control the contents and sequence of each "signature", and the assembly of signatures into a book block. Direct digital printing, without plates, can be economic for as many as 500 copies of the book, but are perhaps most useful for print-on-demand, where no book inventory is maintained but copies are printed by computer printing methods as orders are received. The cost of printing may be greater but there are no inventory carrying costs nor risks of having to pay for disposal of unneeded copies.

bond paper - see 9C1 and the various paper making processes described in Chapter 9.

bottled drinks - See 12L and *soft drinks.*

bottles, glass - Both glass and plastic bottles are manufactured by very similar blow-molding methods. Glass bottles are blown by one of several variations of the blow molding processes. Which method is used depends on the size, shape, quantity needed and other factors. See section A2b in Chapter 5 for a description of the different methods, particularly the blow-blow, press-blow, and rotary mold processes, and accompanying operations such as trimming and annealing.

bottles, plastic - These are blow molded. Smaller bottles tend to be injection blow molded (4F2), while larger bottles are extrusion blow molded (4F1). Bottles containing carbonated soft drinks may be multi-walled, blow molded from coextruded parisons (4F4, 4I2), or made by stretch blow molding (4F3).

bowling balls - are molded of mineral-filled thermosetting plastics in two molding stages. A core piece, known as the "weight block," is molded first. Its material varies, depending on the weight desired in the finished ball, but its size and shape are essentially fixed. Sometimes, light weight foam is incorporated in the core when a lighter ball is needed. After the core is molded, it is trimmed, and a hole is drilled in one place for a locating pin that is part of the mold for the shell, the outer portion of the bowling ball. The shell material is engineered specifically for the wear, appearance and control properties wanted in the finished ball. After the shell has hardened, the ball is removed from the mold. The hole needed for the locating pin is then filled with another plastic, but in a contrasting color from the rest of the shell. The color difference aids the operator, who will later drill finger holes, in locating them in the correct position. The ball is then positioned in a lathe that makes a trimming cut to remove flash, ensure roundness, and smooth the surface. A series of sanding and polishing operations further smooths the ball's surface. Trade name, manufacturer, and model number are engraved in the surface and the recessed lettering is filled with paint. Inspection, testing, packing and shipping to the retail dealer follow. At the dealer's location, finger holes are custom drilled to fit the hand of the intended user. Bowling balls have a thick enough shell to permit later surface smoothing and polishing if the ball becomes scratched or cut.

bowls, glass - are pressed (5A2a) and annealed (5A4a).

boxes, corrugated - See *cartons, corrugated.*

brake linings - A brake lining must have the following properties: high coefficient of friction, slow rate of wear of the lining coupled with minimal wear of the brake drums or discs it bears against, low noise generation during braking, fade resistance, ability to perform when wet and ability to withstand high temperatures and to dissipate heat. A combination of materials is used to achieve these properties. Asbestos previously was a key fiber used but has been eliminated in production brake systems because of its health risk to those who service vehicle brakes. Now, the list of materials used is almost always proprietary with each manufacturer. As many as 15 or more different materials may be used in one brake lining and a manufacturer may make different varieties of lining from a list of 35 or more materials. The following are materials that can be found in present day products: carbon or graphite, sintered metal, metal fibers (steel, copper, brass, titanium), polymer fibers (aramid, acrylic and cellulose), various ceramic fibers, glass fibers, clay and other mineral fillers, and a phenolic resin or rubber matrix. Depending on the use, the lining may have a preponderance of one class of material, eg., metal, ceramic or polymer fibers. Ceramics have come into increasing use in recent years. A typical lining is made from a grouping of fibers, sometimes in a woven or non-woven fabric mixed with fillers and some modifiers, bonded together by compression molding with phenolic resins. Metal fibers provide heat conduction as well as friction. The final shape may include chamfers and slots, the latter to provide noise improvement, cooling and space for dust from wear of the lining.

brandy - is distilled from wine or from the marc - the pulp residue from grapes or other fruit that remains after pressing or straining. See *distilled spirits.*

brass - is an alloy of copper and zinc. There are various brasses with different levels of these two major alloying ingredients. To produce brass, zinc and copper are melted together in a reverberatory, crucible, or cupola furnace. The alloy is cast into ingots which are cold worked into sheets, bars, rods, wire or other shapes. Depending on the alloy and hardness, brass is exceptionally well suited for machining or forming operations. It is used extensively in screw machine products, various stampings, and castings. Door hardware, electrical contacts, lamps and light fixtures are common products that include parts made from brass alloys.

bread - can be made from many different recipes. The simplest bread uses one grain (wheat, rye, oats, corn, barley, buckwheat or millet), milled into flour and mixed with water. The resulting dough is shaped and cooked. Matzos, tortillas and chapaties (India), are examples of such breads. These breads are flat or unleavened. Leavened breads have an ingredient that makes the bread rise by releasing carbon dioxide gas which, together with the steam that is formed, creates larger bubbles in the dough, giving it a lighter structure. Leavening agents are baking powder, baking soda, and yeast. Yeast is a microorganism that feeds on the carbohydrates in the flour, turning them into alcohol and carbon dioxide (See fermentation - 12J4.) With baking soda or baking powder, the carbon dioxide gas is released by a chemical reaction with the ingredients and a separate rising operation is not needed. Wheat flour is an important ingredient in raised breads because it includes gluten, a protein that has the flexibility needed to hold pockets of the gas released when the bread rises; other grains, except rye, have little or no gluten.

In addition to leavening agents, most breads have other ingredients to increase their flavor, texture and nutritional value. Eggs, milk, multiple grains, sugar, fats and oils (shortening), salt and various flavorings may be included. The fats and oils give the bread a finer, softer consistency. Various seeds and nuts and raisins may be added, for additional flavor and nutrition. Spices may also be added. Most cooking of bread is done by baking, though steaming and frying are sometimes used.

Breads containing yeast are commonly made in seven basic steps: 1) *mixing* the flour with water or milk, yeast and shortening, salt, sugar and other ingredients. 2) *kneading* of the dough after it becomes too viscous for stirring. (See 11G5 and Fig. 11G5-2.) 3) *rising*. The dough is set aside in a moist and warm environment before baking to allow fermentation to take place and the dough to rise. Typically, the dough is allowed to rise to twice its original volume. 4) *further mixing* by kneading and punching to break up large gas pockets and ensure that the yeast has contacted all the carbohydrates. 5) *further rising* 6) *shaping*. The dough is divided into loaf-sized and shaped amounts and placed in pans. 7) *final rising*. 8) *baking*. Fig. B4 illustrates this commercial bread making processes, which includes removal from the pans, slicing, and packaging after baking. High production bakeries make bread as a continuous process.

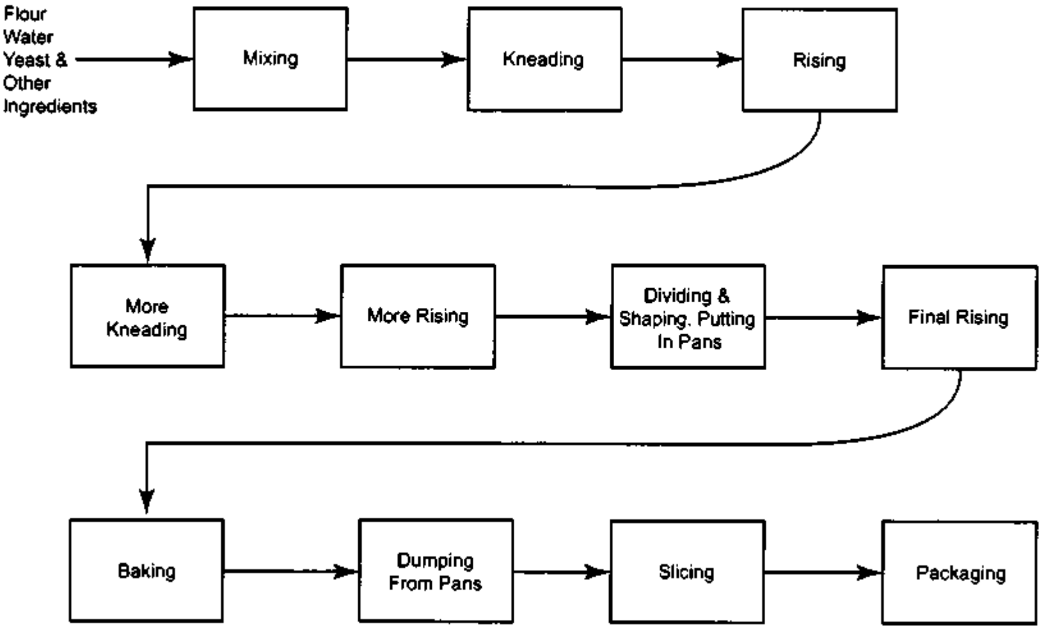

Fig. B4 The sequence of operations involved in commercial bread making.

breakfast cereal - See cereals, breakfast.

bricks[4] - are made from clay (most commonly red burning clay). The clay may be dried, screened, and crushed, to provide the proper particle size distribution. In the stiff-mud process, it is mixed with enough water to bring the total water content to 12 to 15%. This provides adequate workability. The mixture is extruded to the desired cross section, cut to length and, if to be used for face brick, may be repressed to provide a more uniform shape and smoother surface. The bricks are dried in ovens or in the atmosphere, and then fired in a kiln at 1600 to 1850°F (870 to 1010°C). Fig. B5 illustrates the full brick-making process.

bronze - was originally any one of a number of alloys made from copper and tin, but the term has also been applied to some other brass-colored alloys, especially if they contain tin. Other minor ingredients may be used, but copper and tin are still the principal alloying metals. Zinc, lead, and other metals may also be included. Additions of phosphorus and aluminum add strength. Bronze alloys are hard (harder than pure iron), strong and corrosion resistant. They are easily lubricated and used extensively in bearings and other machine parts. Pump parts, valves and marine propellers are other applications. Bronze parts are commonly made by casting or forging and machining.

brushes - There are many kinds of brushes. *Toothbrushes*, cleaning and *scrub brushes*, *paint brushes*, wire brushes and revolving brushes are most common, but manufacturing methods for almost all are similar. All manually-operated brushes have a handle of some kind. Handles traditionally were made from wood but most now are injection molded (4C1) of plastics, some from structural foam plastics (4C3). Wooden handles are made from various hardwoods, depending

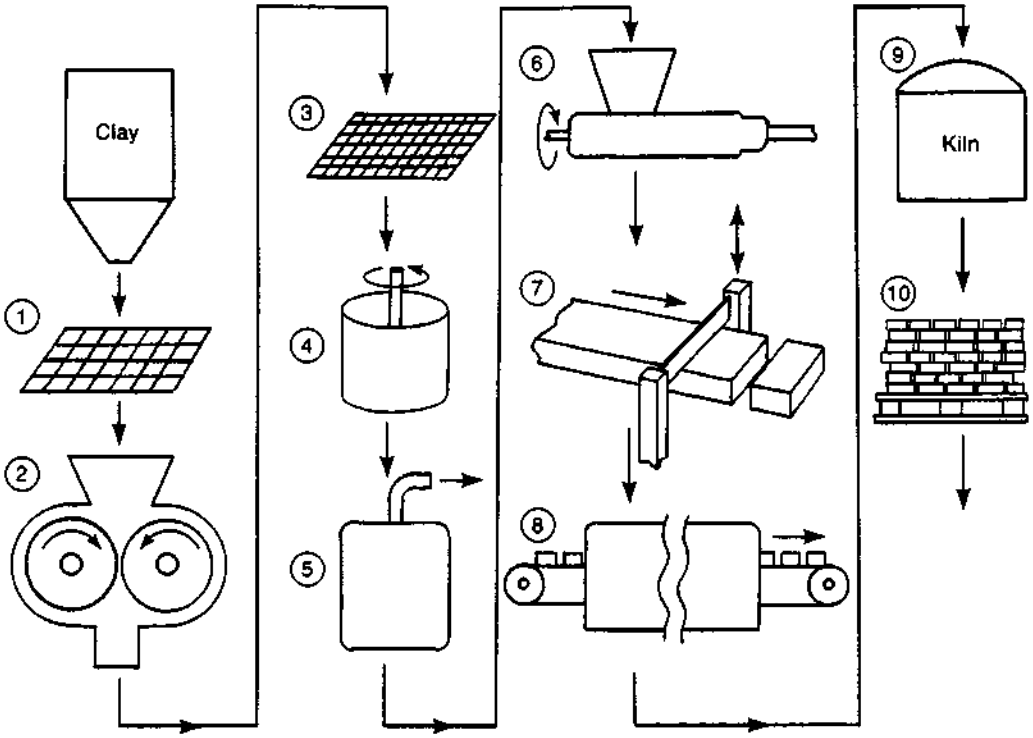

Fig. B5 - The sequence of operations involved in brick making: 1) initial screening of clay, 2) crushing of large clay pieces, 3) further screening 4) mixing of powdered clay with water to plastic consistency, 5) vacuum degassing, 6) extrusion of clay paste to form a continuous block, 7) cutting the block into bricks, 8) oven drying slowly to remove moisture while preventing cracking, 9) kiln firing of bricks at a high temperature, 10) cooling of fired bricks prior to storage and shipment.

partially on the application. Polypropylene is a common plastic handle material; cellulose propionate is used for many toothbrushes; elastomers are used for some handles. Bristles for the best paint brushes have traditionally come from the back hairs of semi-wild hogs grown in cool climates, not from hogs raised for meat. Artificial bristles are now widely used. Nylon is the major material. Other bristle materials are polyethylene, polypropylene, polystyrene and other man-made fibers, and tampico, bassine, palmetto, palmyra, and other natural vegetable fibers. Metal bristles are made from steel, stainless steel, brass, copper, or aluminum wire. (See *wire, mechanical.*) Plastic bristles are extruded (4I) from multiple-orifice dies. Bristles may be crimped along their length to provide greater flexibility and better holding power when they are held in place with an adhesive or plastic. Bristles are cut to length, gathered in bundles, held together at one end by metal staples, adhesive or, if thermoplastic, by being heated to the softening point at one end so that the individual bristles bond together. Many brushes use bristles of twice the length needed so they can be folded in the middle at the handle end over a metal staple. The bundles of bristles are punched into holes in the brush handles with enough force to drive the staple into the wood or plastic handles deep enough for secure holding. This method is common for tooth brushes. Other brushes use adhesive to hold the bundles of bristles. With many brushes, the bristles are trimmed after insertion. Trimming provides uniform bristle height and special shapes to the bunched bristles as is desired in some toothbrushes and other brushes. In high-production situations, all this handling and assembling is highly mechanized with special machinery so that little manual labor is involved. Packaging is also automatic.

bulbs, light - See *lightbulbs.*

bulletproof glass - See *glass, bulletproof (bullet resistant).*

bullet-proof vests - are made from high-tensile strength Kevlar, Twaron, Spectra or Bynema fibers.(See *Kevlar.* Twaron is a related material.) Spectra is an ultra-high-molecular-weight polyehylene-based fiber. Bynema is similar to Spectra. Kevlar vests are made from multiple layers of woven (10C) fabric. Spectra vests are made from a non-woven fabric that has parallel yarns of the material held together with a plastic resin. From 8 to 30 layers of the Spectra fabric are layered and sewn together, with alternate layers at right angles to each other, and with each pair separated from the others with a layer of polyethylene film. With both materials, vests are sewn of polyester/cotton or nylon fabric and the Spectra or Kevlar panels are sewn inside or placed in pocket-like pouches. (See 10H.) Other pouches may be placed in critical locations to hold ceramic or metal plates for extra protection.

bullets (small arms ammunition or cartridges) - have four major components: 1) The bullet (projectile), a cylindrically-shaped lead slug with a conical point, coated with copper. 2) A cartridge case, formed from brass. 3) a primer, a central cup, loaded with a percussion explosive, eg., mercury fulminate, and press fitted at the base of the cartridge case. This primer is a detinator for 4), the gun powder, also contained in the case. The case, primer, explosives and bullet are all assembled automatically in current production practice. The brass case is crimped over the projectile to hold all the parts together. Fig. B6 shows the complete cartridge assembly.

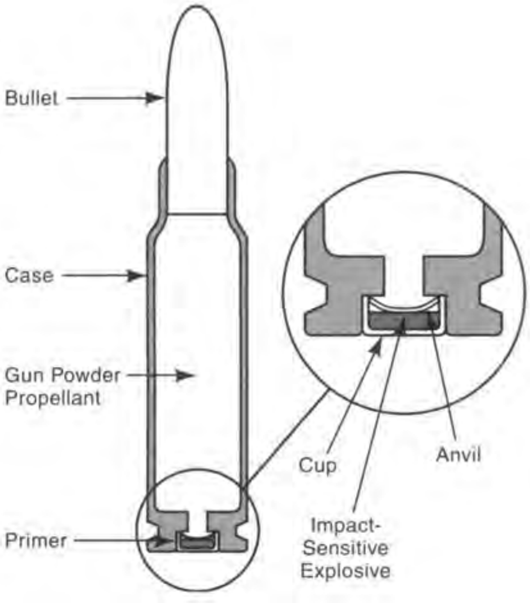

Fig. B6 The cross-section of a small arms ammunition cartridge.

The bullets are cast in permanent molds (1D1) or cold-formed (2I2) from a lead alloy, are swaged (2F1, 2D12) to the final size and shape, are cleaned in a multi-step operation with aqueous cleaners, and then barrel plated (8C, 8C3) with a thick coating of copper. The bullets then undergo "final striking" in a rotary die punch press to make the shape more exact and the dimensions more precise. Some bullets are formed from copper or brass and are lead filled afterwards.

The case is made from cartridge brass sheet that is deep drawn (2D5, 2D5b) in a series of steps. There are up to five deep drawing operations to convert flat sheet to the long cylindrical shape needed. The material is annealed (8G5b), washed, and lubricated between the draws. Then a cold heading operation (2I2) forms the primer pocket and the rim or groove needed for ejection of the spent cartridge from the gun after it is fired. There are further forming operation to reduce the diameter of the case near the mouth, trim it at the mouth and anneal it again so that it can be crimped around the bullet. An alternative method for forming the case instead of deep drawing from sheet involves upset extrusion (2I4) from a slug of brass.

The primer consists of three parts: a cup of about 3/16 in (5 mm) in diameter drawn from brass or copper sheet, an *anvil*, a small stamping that fits inside the cup, and a percussion explosive that is squeezed between the anvil and the cup bottom when the gun's firing pin bends the bottom of the cup bottom inward. Filling the cup with percussion explosive is a dangerous operation and is often performed by robots or other automatic equipment without handling by human operators. The complete operation includes placing a layer of foil or paper between the explosive and the anvil, inserting the anvil and sealing and drying the explosive charge.

The assembly sequence for the cartridge is preceded by tumble polishing (8B2) and resizing the case. The primer is then pressied into the case bottom, the case is filled with the exact amount of gun powder needed, the bullet is inserted into the case, and the area where they overlap is crimped to make a secure assembly. The primer and bullet are fed automatically to the assembly machine from hoppers, and the gun powder is metered from a supply hopper. The final step is to pack the finished cartridges into a box, usually 50 in each box, for shipment to retail outlets and customers. Sensors verify the completeness and correctness of the assembly operation and a sample of each lot is test shot to verify function and accuracy.

bungee cords - consist of a core of natural or synthetic rubber, a braided cotton or nylon covering and hooks or other metal terminations at the ends. The rubber is blended, usually with some reclaimed material, heated and extruded (4I) into ribbons 0.09 to 0.12 in (2.3 to 3.0 mm) thick and 0.25 in (6.3 mm) wide. The ribbons are dusted with talc or finely powdered soapstone to provide a lubricant so they do not stick together. Several such ribbons are bundled together, stretched to reduce the diameter slightly, and fed into a braiding machine, which provides the fabric cover. In some constructions, two layers of braided covering are used. The braided rubber cords are cut to length and assembled to metal end hooks that have been formed from painted or plastic-coated heavy steel wire. The cord is doubled over each hook and tightly wound with another steel wire in a special assembling machine to hold the hook securely. The number of rubber strands in the core determines the rated tensile strength of the cord.

burlap - The coarse fabric is woven (10C) from jute or jute-like natural fibers. India is a major source for the fibers and for much of the burlap cloth. Burlap is sewn into bags and used for wall coverings, as backing for linoleum and in upholstered furniture.

butter - is made from the milk fat in cream. The milk is first processed in a cream separator that divides it by gravity into skimmed milk and cream. The cream, of 35 to 45% fat, is chilled and held to a low temperature. It is then strongly agitated (churned) until some of the fat globules break down, releasing liquid fat which then bonds other globules together. These globules form a somewhat solid mass accompanied by liquid buttermilk. The buttermilk is removed; the coagulated mass is washed (to remove milk curd and other non-fat residue) and is further worked to distribute the remaining moisture uniformly. At this point, the fat content is approximately 98%. During this working operation, salt and coloring are normally added. Current large-quantity production systems carry out the foregoing operations on a continuous basis in contrast to earlier production operations that were batch by batch. The butter is then chilled, extruded and cut into sticks which are wrapped and packaged with automatic equipment.

buttons - There are three basic methods for making clothing buttons in production quantities: 1) cutting the buttons from sheet plastic, normally polyester. 2) injection molding (4C1). 3) compression molding (4).

Injection and compression molding methods produce good, workable buttons, but neither process provides the pearlescence often wanted in buttons.

The process of cutting from polyester sheet is akin to the historical method where buttons were cut and shaped from a variety of natural materials: sea shells, bone, horn, wood, shells of Brazilian nuts, brass, pewter, precious metals, tortoise shell, and ivory. Some buttons are still made from these materials for costly garments. The method of cutting from sheet polyester has the following steps: 1) Liquid polyester plastic, a dye or other colorant, liquid wax, and a catalyst, are mixed together. 2) The mixture is slowly poured into a large cylindrical vessel that rotates on a horizontal axis. The liquid spreads from centrifugal force and lines the interior surface of the cylinder. The plastic polymerizes and becomes solid but initially is still quite soft. The wax has migrated to the inner and outer surfaces of the polyester. 3) The cylindrical vessel is stopped; the sheet is cut, carefully removed, flattened, and placed on a conveyor belt. The wax is removed. 4) The sheet is carried on the conveyor to a punch press. The press, with a blanking die, cuts the sheet into a series of round button-size discs (2C4). 5) The discs, still hot and soft, are transferred to a nylon bag and immersed in hot, salty water, where the polymerization continues and the blanks harden. The water and the blanks cool and the blanks are then transferred in the bag to a cold water tank and, after a period, to a centrifugal dryer. 6) The blanks are transferred to machining equipment where each button, securely held in a collet, is machined with a form cutter to the particular shape needed, for example, with beveled edges and a concave or patterned front. The machine also drills two or four thread holes in each button. The buttons may also be reversed to bevel the back edge. This machining is carried out on special automatic, multiple-station turret machines. 7) Following machining, the buttons are tumbled with an abrasive to remove tool marks, burrs, and sharp edges, and to provide the surface finish wanted. 8) The buttons are then washed, dried, checked for defects, and packed for shipment.

C

cabinets, wood - See Chapter 6.

cams[17] - are rotating or reciprocating machine elements that create a prescribed motion in other machine elements. Two typical cams are illustrated in Fig. C1. Steel and ductile cast iron are primary materials for cams though some cams designed for less heavy usage in consumer products (for example, making decorative stitches in household sewing machines, or switching washing machine cycles) are molded from phenolic and other plastics. Most metal cams are machined by milling (3D) and grinding (3C) but some are made by powder metallurgy (2L1), or by sheet metal blanking (See fine blanking, 2C9 and Fig. 2C9-2). When machining is utilized, the blank may be a simple unshaped piece, or may be a forging (2A4) or casting (1B)(1G) that is made to near the final net size and shape to minimize the amount of machining necessary. All cam machining and grinding requires fixtures and cutter-path or depth-of-cut controls to achieve the proper contour. The most accurate cam machining involves CNC control (3U2) that utilizes polynomial, circular, or linear interpolation between discrete location points. Other cam machining utilizes special machines that employ master cams to control the path of the milling cutter (3U6) or grinding wheel. Most cams require some heat treatment for wear resistance. Case hardening (8G3b) or other surface hardening methods (8G3a) are normally used, though many steel cams, especially if small, are through-hardened. After heat treating, cams are usually ground to correct any distortion resulting from the heat treatment and to provide a smoother surface. Sometimes, EDM wire machining (3I1b) or other is used on through-hardened blanks, eliminating the need for prior near-net-shape forming and for milling. "Hard machining" techniques can also be used to mill cam blanks prehardened to Rc 55 or less. Some cams are polished with a soft wheel and fine abrasive (8B1) to provide the desired surface smoothness.

candied fruit - See 12J10.

candy - "sweets" in Britain, are confections of many varieties that all have one basic similarity - the

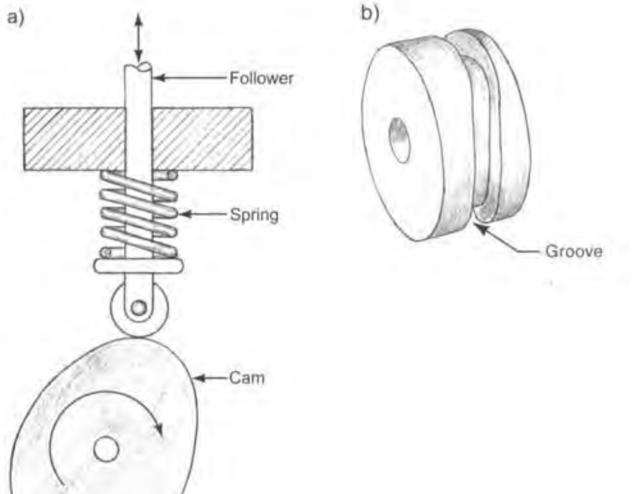

Fig. C1 Two typical cams: a) an open radial or plate cam with a roller follower. The cam moves the follower in one direction. Motion in the other direction is provided by the spring but is limited by the cam. b) a cylindrical or barrel cam with a grooved cam surface. The cam moves the follower in both directions.

main ingredient is sugar. Sucrose (from sugar cane and sugar beets), invert sugar (a combination of glucose and fructose), corn syrup, honey, maple syrup or some other sweetener may be used. The second ingredient is a flavoring such as chocolate, vanilla, fruit flavors, peppermint, licorice, spices and herbs. Fillings such as peanut butter, peanuts and other nuts, fruit, cereals, flour, milk products, starch and gelatin may be included. Coloring agents, salt, fat and some preservative may also be added. Candies can be considered to exist in five basic varieties: chocolate, hard, chewy, whipped and panned. Most candies of these varieties are made by mixing the main ingredients with water and heating the mixture to a high enough temperature to melt and blend the ingredients and boil the mixture. The length of time candy is boiled, the temperature to which it is cooled after boiling and the way is processed after cooling, affect its hardness and other properties.

Chocolate candy gets its flavor and texture from chocolate liquor and cocoa butter. (See *chocolate.*) Cocoa butter is the fat of the cocoa bean and chocolate liquor is a combination of cocoa butter and the shelled and finely-ground cocoa seeds. In making chocolate candies, the melted candy mixture is either poured into molds or poured over cookie or other candy filler material and allowed to cool and harden.

Hard candies are made from a mixture that includes sugar, corn syrup and a small amount of water. (The corn syrup, in addition to its sweetening properties, aids in controlling crystallization.) The solution is boiled to a temperature of about 300°F (150°C), to remove almost all the water. Flavorings are added, and the mixture is cooled and dumped on a cooling table. The mass is then worked by pulling and rolling it into long rods. The rods may be cut into sticks or pressed into other shapes. Candy canes are made from pulled red and white strands twisted together and bent to shape.

Chewy candies usually include jelling or softening agents such as gelatine, starch, flour, milk or fats and have a higher moisture content than hard candies. The paste formed after boiling is either formed in molds or cut from flat masses to make caramels, gums, jellies, toffees and other softer candies.

Whipped candies are mixed vigorously to entrap air and produce a smooth texture. Egg whites and gelatine are included in the mixture and act as whipping agents. Marshmallows and nougats are made with this operation.

Some panned candies are made by placing small center pieces in a rotating pan and spraying with cooked syrups, which form layers on the center piece. Jelly beans (See *jelly beans*) and various chocolate covered candies are made by this method.

Confectioners' glaze provides a smooth and harder shell to several different kinds of candies, preventing sticking, functioning as a sealer and extending shelf life. It is used on jelly beans, malted milk balls, "M and M"- type chocolate candies, gum balls and licorice candy. It consists of food grade shellac in an alcohol solution, 2 to 6 lb of lac per gallon of alcohol. When applied to a candy, the liquid is sprayed while the candy tumbles in a rotating container. About 4-8 oz is applied per 100 lbs of product. Cool, dry air is blown through the tumbling material to evaporate the alcohol and dry the product. Carnauba wax may be added to the final coating to provide a shiny finish.

Commercial branded candies are made in very large quantities and the mixing, boiling, cooling, crystallization, casting, *enrobing* (poured coating), other processing operations, wrapping and packaging are all highly mechanized.

canned food - See 12G4.

cans, metal - Aluminum cans, used primarily for beverages, are made on fully automatic equipment where deep drawing (2D5b) is the key operation. Sheets of a special aluminum alloy (with 1% Mg, 1% Mn, 0.4% Fe, 0.2% Si, and 0.15% Cu) are blanked to produce flat discs. The discs are about 5 1/2 in (14 cm) in diameter for a standard U.S. 12-ounce can. The discs are deep drawn to a cup shape, about 3.5 inches (9 cm) in diameter and 1.3 in (3.3 cm) deep. Two more drawing steps increase the height to about 5 in (13 cm) and reduce the diameter to its final value. The bottom of the can is formed to its special shape to increase stiffness, and the top is trimmed to remove the wavy edge that results from deep drawing. The can is then cleaned and printed in several colors with the desired logo and contents identification. The top of the can is then necked in and a small outward flange is left in place. The can is now ready for filling.

The top and pull tab are made from separate aluminum sheets of a different thickness and alloy. The lid is blanked, scored for the opening and formed to include a small projection at the center that forms a rivet to fasten the pull tab. The blanked (2C4) and formed (2D2) pull tab is positioned in place by automatic equipment and the rivet is set.

After the can is filled with the beverage, the flange from the can top is folded over with an extension of the lid and they are crimped together to seal the can. Fig. C2 illustrates the forming sequence.

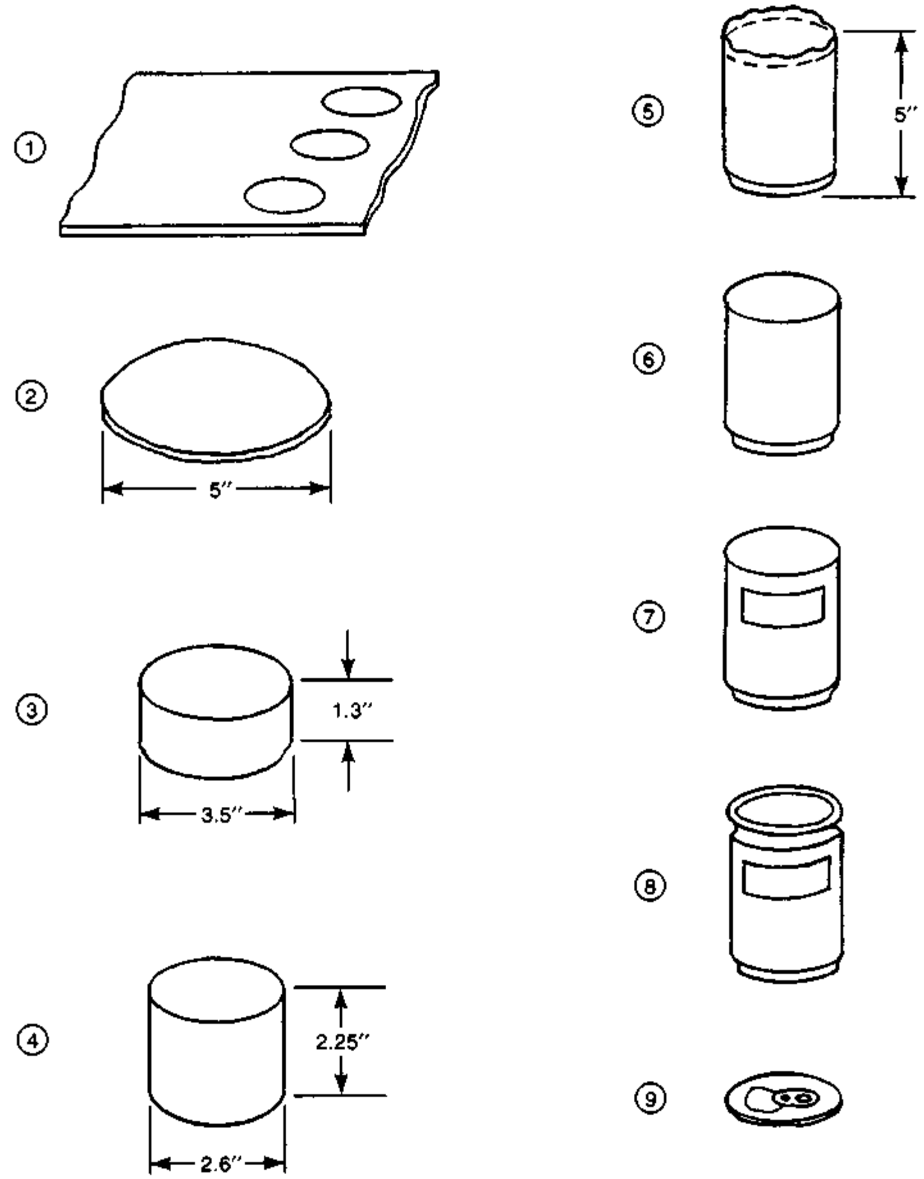

Fig. C2 The manufacturing operation sequence for making aluminum beverage cans: 1) & 2) Discs are blanked from sheet aluminum. 3) The disc is deep drawn to a cup shape. 4) A second drawing makes the cup deeper and narrower. 5) The third drawing reduces the can's diameter to its final value and extends its length. Forming of the bottom is part of the operation. A wavy edge exists at the top of the can. 6) The wavy edge is trimmed off. 7) The can is printed in several colors with identifying information. 8) The can top is formed leaving a flange for attachment and crimping of the cover. 9) The cover is blanked, formed and assembled as a separate part, which is assembled to the can and crimped for a seal after the can is filled.

capacitors, electronic - See 13L2.

carbon, activated - is usually made from peat or sawdust that is mixed with a chemical agent and dried. The mixture is then heated to 1600°F (870°C) with steam or carbon dioxide to carbonize it. The chemical agent is then removed with water, leaving carbon particles without other hydrocarbons and a very greatly increased surface area. Activated carbon is used in gas masks, various kinds of filters for purification and odor control and, in industry, for the recovery of vapors.

carbon black - is produced from the incomplete combustion of gas or liquid fuel. The product is collected on a metal surface. Most current production is from the oil furnace process that uses, as fuel, residue from catalytic cracking of petroleum. The fuel is burned with insufficient air for complete combustion but the heat produced pyrolizes unburned oil droplets into carbon black particles. The black smoke is first cooled with a water spray and then passed through precipitators, cyclones, and bag filters, to separate out combustion gases, cooling water and any undesirable grit. The soot is then pelletized for convenience of handling and to prevent excessive dust. Carbon black has its main use in rubber tire manufacture. It is also used as a black pigment in inks, paint and for coloring plastics.

carbon fibers[4] - are made with several processes. High-modulus fibers are made from rayon fibers that are charred at 390 to 660°F (200 to 350°C), carbonized at (1830 to 3630°F (1000 to 2000°C) and then heat treated and stretched at 5400°F (3000°C). Fibers with lower properties but better process yields are made similarly from polyacrylonitrile (PAN) fibers. Another process melts coal tar or petroleum pitch, spins the liquid into yarn in an oxygen atmosphere and treats the fibers at 5400°F (3000°C). Carbon fibers provide very light and very strong reinforcement in composite plastic parts used in sailplanes, powered airplanes and other products. Fishing rods, skis and archery bows are molded with carbon fiber reinforcement.

carpets - are rugs or other heavy fabric pieces that are normally fastened to the floor and cover the floor completely. In large or long rooms, several pieces may be joined together when the carpet is laid. The term "carpet" is also applied to oriental or Persian rugs made by hand in western and central Asia, in the Caucasus and in North Africa. In Chapter 10, see I7. These rugs have been imported into Europe from the 16th century, but were produced centuries earlier in Asia for local use. The tufts are inserted, woven and tied by hand to heavier warp yarns. Tufts are normally of wool, colored with natural dyes. In Chapter 10, see I1 for Axminster, Brussels, chenille, velvet and Wilton types. See I2 for pile rugs, I3 for knitted, I4 for needle punch, I5 for hooked, I6 for braided and I8 for needle point types.

carrying cases, power tools and instruments - Inexpensive carrying cases for power tools and similar items are made by a number of different methods, depending on the manufacturer and the size and weight of the device to be carried. The cases are normally molded in plastic with an internal cavity or dividers to fit the shape of the product they carry. Injection blow molding (4F2) is one method and it is often utilized to make the case exterior, the interior nest for the tool, the hinges, the clasps and the handle, all as one part and in one operation. However, to create more robust hinges, especially for power tools of heavier weight, the carrying case is often blow molded in two basic parts, connected by hinge elements molded into each half. Clasps, and sometimes a handle, are injection molded (4C1) as separate pieces. The two halves snap together at the hinges and the clasps and the separate handle, if used, also snap-fit together. Some manufacturers injection mold the two halves of the case and, when injection molding is used, the parts for inside the case have interior wall dividers to locate and hold the product instead of the surface cavities formed in the inner wall when blow molding is used.

cars - See *automobiles.*

cast iron - is normally made in a cupola (1A1) with pig iron, steel and cast iron scrap, limestone and coke.

CDs - See *compact discs.*

cellophane - is a transparent viscose film extruded from a solution similar to that used to make rayon. (See 10A2.) The extrudate enters a bath of buffered sulfuric acid and this is followed by a warm water bath for rinsing. The film is then immersed in a bath of sodium sulfide to remove the sulfur, then bleached with a hypochlorite solution, washed and treated with glycerol to provide plasticity. One surface is usually coated with nitrocellulose lacquer or a plastic to provide moisture proofing.

cellular glass - See 5A7c.

cellulose acetate plastics - are transparent thermoplastics. Cellulose, made from wood pulp or cotton linters is reacted with acetic acid or acetic anhydride in the presence of sulfuric acid[2]. Variations of the resulting material include triacetate, tetracetate, pentacetate, or mixtures of these. Other variations are cellulose acetate butyrate, made by esterification of cellulose with acetic acid and butyric acid with the aid of a catalyst and cellulose acetate propionate, similarly made. These plastics are used as ingredients in lacquer, for photographic film, for the injection molding of eyeglass frames, tool handles, toothbrushes and hairbrushes, packaging tubes for small items, and various transparent items. These plastics are also cast into sheet, thermoformed and used in coatings and insulation. Cellulose acetate butyrate is used in outdoor signs.

cement, Portland - Raw materials are: 1) limestone, chalk, oyster shells or another mineral rich in calcium, 2) clay or another mineral rich in silica, 3) gypsum, 4 to 5% of the mix, to slow the hardening process, 4) blast furnace slag, iron ore, waste bauxite and/or sand, which may be added in small quantities to adjust the mix. The materials are crushed and finely ground, mixed, and placed in a rotary kiln. Production kilns may be as large as 17 ft (5 m) in diameter and 650 ft (200m) long. The material mix is burned, ie., heated to a temperature of about 2700°F (1500°C), to form clinker. The kilns are slightly inclined so that the raw materials, fed at the high end, gradually work their way to the lower end after about six hours. Clinker results from a number of reactions that take place during burning including the evaporation of water and evolution of carbon dioxide. The clinker is milled to a fine powder and is stored for bagging or bulk shipment to customers.

The cement is chemically unstable and when water is added, the structure rearranges and cures, first as a jelly-like mass and then, gradually, as a hard material. Portland cement, mixed with sand and aggregates and often reinforced with steel rods or bars, is widely used in road, bridge and building construction.

ceramic materials, advanced, (high technology ceramics), (modern ceramics), (fine ceramics) - See 5B4a.

ceramics - See 5B.

cereals, breakfast

corn flakes - Corn grits (corn kernels without the bran and germ) are pressure cooked with water, malt, sugar, salt and certain flavorings. Pressure is approximately 18 psi (124 kPa) and cooking proceeds for one to two hours. The cooked grits are dried and tempered to about 20% uniform moisture content. They may then be pelletized to incorporate other ingredients and grains, depending on the formulation. The pellets are rolled into flat shapes (flakes) between pairs of stainless steel rollers. Preheating may precede the rolling operation. The rolled shapes are then toasted in air at 525°F (275°C) or higher to dehydrate, crisp, brown and blister the flakes. An additional operation may be spraying with a mixture of vitamins, minerals, flavorings or sugar. Flakes are then dried to about 3% moisture content and packaged.[3]

wheat flakes[23] - differ from corn flakes in that the whole wheat kernels are used whereas, with corn flakes, only the endosperm is used. Before the kernels are cooked, a process called *bumping*, is carried out. The process has two steps: first the kernels are lightly steamed; then they are run through a pair of opposed rollers that partly crush the kernels. These steps allow all parts of the kernel to be cooked; otherwise the bran would block the interior. *Cooking* is next with the addition fine granulated sugar at about 10% of the weight of the bumped wheat, malt syrup, and salt, each at about 2% of the wheat weight, and water sufficient to yield a moisture content in the cooked mixture of about 30%, including condensed steam. The ingredients are mixed and then cooked with steam for about 1/2 hour at ambient pressure. The mixture tends to form lumps and these are broken up in special *lump breaking* machines that push the lumps through a comb-like structure. Several stages of progressively finer breaking are usually used, with screening operations in between the stages to remove small lumps from the mix. When breaking is completed, the mixture is also cooled during this operation. The finished lumps ("grits") range from 1/8 to 1/2 in (0.3 to 1.3 cm) in diameter. The grits are then dried to a moisture content of 16 to 18%, cooled, and tempered. Normally, after drying, the outer portion of each grit has less moisture than the center portion. *Tempering* involves holding the grits for a period of time in bins so that the internal moisture content becomes more uniform within each one. The grits then are *rolled* and *toasted* with methods similar to those used with corn flakes. The final moisture content is 1 to 3%.

oatmeal[23] - The groat portion (kernel with hull removed) of the grain is the part processed for oatmeal. The first operation on the grain is *separation* to remove foreign matter such as trash from the fields by sieving, and finer material, such as chaff dust, by aspiration. Then the grain undergoes *cleaning* to further remove dust, weed seeds, stems and oat grains that are undesirable for milling. This operation is performed with several pieces of equipment that utilize width and length disc separators, screens, gravity separators, and aspirators. The resulting product is then *hulled*. The hull (external shell) is removed by an impact process that uses centrifugal force to throw the kernels off a spinning disc and against the wall of a cylindrical housing. The hulls tend to break off from the groat. They both fall to the bottom of the housing and are separated from the groat by table separators that use vibration to move the materials along a path. Differences in density, surface smoothness and shape cause the groats to separate from the hulls and any partially-separated kernels. (The latter are returned to the hulling operation for reprocessing.) Then the groats are cut into 3 to 5 pieces by a special machine, and are passed through a steamer to heat the pieces and bring their moisture content to within 10 to 12%. The groats are then *rolled* to create flakes of oatmeal. Rolling involves passing the pieces between two cast-iron rollers. This further conditions them and produces a flake-like shape. They are then packaged for sale as quick rolled oats for oatmeal. (Groats that are not cut before steaming are rolled to flakes of greater thickness to produce old-fashioned rolled oats without the quick cooking feature.)

shredded wheat cereals[23] - are made primarily from soft white wheat, using the whole kernel. The kernel is first separated from all foreign material: dust, sticks, other grains, stems, dirt, and stones. It is then cooked in excess water for about 1/2 hour at a temperature just below the boiling point. Cooking is stopped when the center of the endosperm changes to a translucent gray color. At that point, the moisture content of the kernel is 45 to 50%, and it is ready for further processing. The kernels are moved to cooling equipment where circulating air reduces their temperature to ambient. They are then tempered to equalize the internal moisture content and develop the firmer consistency needed for shredding. Shredding is accomplished by feeding the kernels between two parallel, closely fitting rollers, one with a smooth surface, the other with a series of parallel, closely spaced, circumferential grooves. The kernels are squeezed into the grooves, filling them with cooked wheat. A series of comb teeth fit into the grooves on the exit side of the rollers and force the strings of cooked wheat to fall on an accompanying conveyor, producing one layer of "biscuits" of shredded wheat. Additional rollers along and above the conveyor produce additional layers of shreds. There may be as many as 20 pairs of rollers to deposit 20 layers of shreds, depending on the size and thickness wanted in the finished product. Different groove sizes, spacings and shapes and various roller arrangements may be used. Cutters after the last roller pair score and partially sever the shreds across the conveyor. The stacked layers of shreds are then fed on the conveyor to an oven for baking. The initial oven zone is at a high temperature to insure initial heating of the biscuits, and is followed by lower temperature zones. The biscuits lose moisture, rise in thickness, develop the desired color, and are further dried. Final moisture content is about 4% in contrast to the 45% present when the biscuits enter the oven. The final severing of the individual biscuits from the continuous layers is easily accomplished where the layers were scored.

other shredded cereals[23] - The same shredding method used for shredded wheat can be employed in making other cereals such as "Chex" squares that feature bite-sized pieces. The method is used with corn, rice, oats, and wheat or combinations of them. Whole kernels are used in some cereals and parts of kernels and flours are also used. The nature of the grain ingredients depends on the characteristics wanted in the product and the method of cooking before shredding. Other ingredients that may be used are malt, salt, sugar, colorings, starches, vitamin and mineral enhancements, and preservatives, as are used with other cereals. These ingredients are mixed and cooked by one of two methods: pressure cooking, very similar to that used with corn flakes and other flakes, or extrusion cooking. Extrusion cooking utilizes equipment that mixes food materials and forces them through an orifice of a prescribed shape and size. The extruders, like those used for plastics extrusion (4I), utilize one or two longitudinal screws that churn the material as well as forcing it through the orifice. Heat is generated from the friction of mixing and is also applied from external electric resistance bands, both of which provide cooking. The moisture content of the material, after cooking, ranges from 25 to 32%. (This content is less than that needed for shredded whole wheat). For pressure-cooked material, tempering takes place to allow equalization of the moisture content, but this is not necessary with extrusion cooked material. Shredding then takes place as with shredded wheat but the rollers usually have cooling channels to offset the heat generated by the drier mixed mass of grain and more cross grooves are incorporated in the rollers. Fewer layers of shreds are deposited on the conveyor. Scoring or cutting of the cereal squares then takes place. The squares are conveyed to a baking oven which may be of a continuous conveyor type if the shreds are only scored, or a fluidized-bed toaster if the squares are severed from one another. For either type, the baking takes only one to four minutes and the moisture content of the finished product is between 1.5 and 3%. For corn and rice squares, the oven is configured to provide some puffing of the product. The oven has two sections, the first for partial drying, and the second at a higher temperature of 550–650°F (290–340°C) that causes the internal moisture in the shreds to turn to steam and expand the shreds.

oven-puffed cereals[23] - are normally made from rice or corn or mixtures of the two. When rice is used, it is first pressure cooked in water with sugar, salt, and malt. Cooking time is about one hour at a pressure of 15 to 18 psi (100 to 125 kPa). The mixture, then with about 28% moisture, is cooled and any agglomerated pieces are broken up. It is dried to about 17% moisture content and tempered for up to about 8 hours to allow the internal moisture level to be uniform. Following tempering, the particles are slightly flattened in a bumping operation and again dried, this time to about 10% moisture level. The particles are then fed into an oven that reaches a temperature of 550–650°F (290 to 340°C) at the end of the heating cycle, which lasts about 90 seconds and toasts and expands the cereal. Fluidized bed or rotary ovens are used. The cereal is then cooled, treated with preservatives and vitamins, if specified, and packaged.

chairs, upholstered - See 6H.

chairs, wooden - See Chapter 6.

charcoal - is made by the destructive distillation of hardwoods. (See 11C1g.) Charcoal is used for activated charcoal in filters and absorbent applications, as fuel, and in the carburizing of steel.

cheese - Cheese is formed from bacterial action on milk. The following sequence, for cheddar cheese, is typical of those involved with dryer cheeses: The milk is pasteurized. A culture of bacteria is added and the milk is heated to approximately 88°F (31°C), (Slightly different temperatures are used for other cheeses) for a period of 1/2 to 1 hr. Rennet is added to accelerate the bacterial process and is allowed to work for another 1/2 hr. By this time, the mixture has separated into curds (semi solid material) and whey (liquid). The coagulated curds are cut with a tool of multiple wires called a "curd knife" and the mixture is allowed to sit or "heal" for about 10 min. Then the curds are allowed to float an additional time, perhaps 1/2 hour, as they tend to loose moisture and become harder. The mixture is heated to about 101°F (38°C) and stirred to keep the particles of curd floating. When the curds are of the right "feel", they are allowed to settle to the bottom of the tank. The whey is then drained off and the curds remain at the bottom of the tank for about 2 and 1/2 hr. The curd is then cut into small pieces and salt is added. The salt has three functions: 1) It stops the bacterial action, 2) it aids in drying the curds, and 3) it adds flavor. The curds are then placed in boxes in which they are pressed to remove additional whey (moisture). The resulting blocks are then aged for a period of from several months to about 2 and 1/2 years at a temperature of 38 to 40°F (3 to 4°C). The longer the aging period, the sharper the cheddar flavor. Softer, more moist cheeses have a shorter process sequence with less processing of the curds and either no aging or a far shorter aging period.

cheese, Swiss[1] - is made initially with methods similar to those for other cheeses, but then undergoes a secondary fermentation that produces carbon dioxide gas, which creates the openings or "eyes" in the cheese body. The secondary fermentation takes place when the cheese is removed from refrigerated curing after two weeks and moved to a room with a temperature of 68 to 75°F (20 to 24°C). A bacterium, *propionibacterium shermanii*, feeds on the lactates in the cheese and carbon dioxide gas is generated. The action is allowed to proceed for 3 to 6 weeks, after which there are well-rounded eyes in the cheese. The cheese is then returned to a cold room at 45°F (7°C) for 4 to 12 months of aging.

chewing gum[3] - consists of a matrix of a natural or synthetic gum or insoluble latex, together with sugar, softeners, flavors, food coloring, and other additives. Chicle, from the sap of a Central American tree, has been used as the gum base, but almost all current products utilize synthetic resins, gums and waxes because they give more consistent texture and longer lasting release of flavor. Polyvinyl acetate, polyisoprene rubber, polyethylene rubber and resin esters, are used. Pieces of the base material are soaked to soften them and are mixed and heated with corn syrup, sugar (or other sweeteners), flavoring (eg., mint, licorice or fruit), and a small amount of glycerine. The mixture is discharged from the heating chamber as blocks of material weighing 8 to 10 lbs (3.6 to 4.5 kg). These blocks are cooled and passed through a series of paired rollers that gradually reduce the thickness to that of the finished stick of gum. Powdered sugar may be used during rolling to prevent sticking. The final pair of rollers also scores the sheets to gum stick size. The sheets are placed on trays and conditioned for 24 to 48 hours in a chamber at a cool, controlled temperature, and moderate humidity. The sheets are then fed to packaging equipment that breaks the sheets into sticks, wraps them, assembles them into packages, wraps them again, and packs them in cartons. These are shipped in multiple units to warehouses for distribution. The final operations are fully automatic and, in high production facilities, the above blending, treating and packaging of ingredients is on a continuous-flow basis.

Bubble gum is made similarly from a different matrix gum and is normally not rolled into sticks but, instead, is extruded into a rope-like shape and then cut into pieces. The pieces are wrapped, packaged and shipped.

chinaware - is ceramic table ware or whiteware (consisting of such items as dishes, plates, cups, platters, bowls, and pitchers) of a high grade, made from ceramic materials that provide translucence in the finished product. Porcelain and bone china are in the same category. Bone china uses animal bone ash as an ingredient, in addition to the clays used in chinaware. Bone provides greater strength to the product. Stoneware and earthenware usually refer to similar products that are not translucent, that utilize a less pure or less refined clay as raw material and are fired at lower temperatures. Pottery also usually refers to a non-translucent product although the term is also a general one for all kinds of ceramic ware. The manufacturing process for these ceramics is basically the same as with chinaware.

The following is the operation sequence involved in manufacturing boneware dishes or plates, cups, bowls, and mugs:

1. The raw materials: bone ash, kaolin (a pure grade of hydrated aluminum silicate clay), and china stone (another clay), feldspar, and flint, all finely ground, are mixed with water to form a slurry. The slurry is filtered to remove air and water and the resulting mix is extruded into cylindrical pieces called pugs. (See 5B4, 5B4a and 5B7)
2. jiggering (See 5B9): The pugs are pushed through another extruder to remove any remaining entrapped air and are sliced into round clay discs by a special machine. The discs are each placed on a rotating plaster mold of a jiggering machine. An overhead shaped tool descends on the rotating disc and forms the clay disc into the dish shape. Excess clay is squeezed outward and is removed by a cutting tool. The plaster mold absorbs some of the moisture in the clay disc. These operations are all automatic in current high-production facilities.
3. drying (See 5B13) - The formed dish is first dried while on the plaster mold. Then it is removed from the mold and moved to another dryer. After drying to about 0.5% moisture content (from 20% before jiggering) the dishes move to a finishing machine where damp sponges smooth the edges. Before firing, dishes and other chinaware at this stage is referred to as greenware.
4. firing (See 5B16) - The dishes are placed on metal forms called setters that preserve the dish's shape during firing. Setters with dishes are stacked in racks that are placed on a conveyor that moves through the kiln. The kiln temperature is approximately 2290°F (1254°C) and the conveyor moves slowly enough so that each dish is in the kiln for a 9-hour period.
5. vibratory polishing - (See 8B2 and 3K11.) After firing, the dishes are vibratory tumbled to smooth the surface finish.

6. glazing (See 5B15) - The dish is sprayed with glaze from multiple guns to insure coverage, is wiped on the bottom to prevent adhesion to the rack, and is conveyed through the glaze kiln. The temperature in the kiln is about 2020°F (1100°C), and the dwell time is 8.5 hours including 3 hours of cool down.
7. decoration - Decorations on dishes are added, for high-production lots, from decals that are applied by machine or by hand (8I9). Some decoration, for specialty lots of high grade products, is applied by hand brushing by skilled workers. Pad printing (8I7a) is another method. With all these methods, the ink applied is either vitreous or metallic and is melted to adhere to the dish. The typical kiln temperatures for these materials ranges from about 1400 to 1600°F (760 to 870°F) for a period of 1.5 to 2.5 hours.
8. Final inspection and packaging for shipment follow.

Many chinaware products are formed by casting rather than jiggering. Slip casting is the usual method. The raw materials, after mixing, are kept in a liquid state and are called slip. The slip is poured into plaster molds of two or more pieces. The molds are somewhat porous and are similar to plaster molds used in metal casting (1C5). The plaster absorbs water from the slip, leaving a leathery coating in the mold after about 10 or 15 minutes. The excess slip is then poured from the mold; the mold is carefully taken apart and the cast piece is removed. It is still somewhat soft at this point, and is wiped with a damp sponge and other hand tools to remove mold seam marks and to smooth the surfaces. Handles, if used, are made by casting, and are fastened by hand. The cast greenware is then ready for firing as described above.

chipboard (wafer board) - See 6F3.

chips, electronic - See 13K.

chlorine - is made primarily by the electrolysis of salt brine. From salt (NaCl), and water (H_2O), three materials are created: caustic soda (NaOH), hydrogen gas and chlorine gas. The operation is simple except that steps must be taken to keep the caustic soda separate from the chlorine. Membranes and mercury cells are two methods that have been used to accomplish this. Chlorine is also produced as a bi-product when metallic sodium is made by the electrolysis of molten sodium chloride. Chlorine is used in the production of solvents, plastics, synthetic rubber, bleaches and dyes.

chocolate[16] - typical chocolate candy production involves the following major steps: 1) pods that grow, in tropical countries, on the cacao tree, are picked. 2) The pods are cut open and the beans that they contain are removed. 3) The beans are placed in trays and fermented in the sun for several days. 4) The beans are sorted, washed, and blended with beans of other varieties. 5) The beans are roasted. 6) Winnowing machines are used to break and remove the shells. 7) The nibs that remain are ground into a liquid paste containing cocoa butter. 8) The cocoa butter is removed from some of the paste, leaving cocoa cake, which becomes cocoa powder after grinding and is used for chocolate flavoring in other food products. 9) The cocoa butter is mixed with other ingredients including sugar and milk powder (if milk chocolate is being made), and is blended thoroughly. 10) The blending, or heating raises the temperature to 120 to 190°F (50 to 90°C) which melts the cocoa butter and, with nuts, crispy rice, raisins or whatever is added, it is poured into molds of the shape desired. 11) After cooling, the resulting chocolate candy is wrapped and packaged with automatic machines.

chokes, choke coils, inductors (electronic) - See 13L3.

chromium[11] - is produced chiefly from the ore chromite, which contains significant amounts of both iron oxide and chromium oxide. There are several processes in use to obtain metallic chromium from this ore. In one common process, the ore is roasted with soda ash to convert the chromium oxide to sodium dichromate, ($Na_2Cr_2O_7$). This is then reduced to green chromic oxide (Cr_2O_3) by heating it with coke. The chromic oxide is mixed thoroughly with aluminum and the mixture is heated to initiate the reduction of the chromic oxide. This reduction is accompanied by the release of considerable heat, sufficient to melt the chromium. Metal of 97% to 99% purity is produced. Other methods of chromium production use an electric arc furnace for the oxide reduction or electrolysis of chromic acid to yield high purity chromium. Chromium is used as a key ingredient in stainless and alloy steels, in cutting tools, for electroplating and in various chemical compounds where pigments and refractories are two of the major applications.

cider - is made by pressing the juice from apples. The apples are picked, inspected, washed, and rinsed. They are then placed in a machine that breaks and crushes them, reducing them to a pulp. The pulp is pressed in a vertical, top-down press to extract the juice. The usual arrangement in the press is to spread the pulp on mats made from cloth, coconut fiber, or other filter material that retains the solid pulp material but allows the juice to flow. The filter material covers both the top and bottom of the spread pulp and several layers of mats are normally used in each pressing operation. The juice is collected and, by present practice, is pasteurized by heating it to a temperature of 160°F (70°C) for 6 to 10 seconds and then immediately chilling it to 40°F (4°C). It is then bottled. Subjecting the juice to ultraviolet light is sometimes used as an alternative to heat pasteurization. Before bottling, the juice may be tested for sugar (with a hydrometer to measure specific gravity or by a hand-held refractometer that measures the percentage of sugar directly) and for pH. The juice may then be blended or adjusted as required.

hard (alcoholic) cider is made by approximately the same series of initial operations though it may not be washed as thoroughly since various contaminants on the apple skins may aid in the fermentation process. For fermentation, the liquid is traditionally placed in wooden barrels with added yeast and kept in a dry, light area. Fermentation takes several months at a temperature of 45°F (7°C) to 60°F (16°C). Carbon dioxide gas is produced by the fermentation process and must be allowed to escape from the barrels. Sediment is removed before the cider is bottled.

clad metals - See 7C13d.

cloth, anti-shrink - See 10F5a.

cloth, knitted - See 10A, 10B and 10D.

cloth, non-woven - See 10A, 10B and 10E.

cloth, woven - See 10A, 10B and 10C.

clothing - See 10H.

coal gas - See *gas, manufactured.*

coffee - is the liquid made from the bean of a tropical evergreen tree. There are several varieties of such trees, the most important being the Arabian coffee tree. Most commercial coffees are blends, made from the beans of a number of different tree species, from different locations, or from different growing techniques. The fruits from the tree each contain two small green seeds, the coffee beans. The beans are softened in water, fermented, washed and dried in the sun or in heated rotating cylinders. They are sorted mechanically or by hand to remove extraneous material and unsatisfactory beans. After being blended with other beans, the mixture is roasted. Roasting takes place in rotating horizontal drums, heated to a temperature from about 380°F (193°C) to about 425°F (218°C). The higher the temperature, the darker the roast. In roasting, new compounds are formed that produce the characteristic coffee aroma and flavor. The coffee is ground before use, either at the retail store for the customer or in roller or plate-type grinding mills, and packed in sealed containers before shipment to the retailer.

coffee, decaffeinated - Coffee beans are exposed to steam to raise the moisture content and to bring dissolved caffeine to the surface. The caffeine is extracted (See extraction, 11C3) with supercritical carbon dioxide as the solvent. (Methylene chloride was previously commonly used.) The solution is washed from the beans with steam. The beans are then dried. The caffeine is separated from the solvent and used as an ingredient in other caffeine bearing foods and medicines.

coffee, instant - regular brewed coffee, made with hot water, is brewed in several cycles to a specified strength. It is then dehydrated. The prime method used is spray drying (12H2), which produces a granular powder that is soluble in water to make coffee. Freeze drying (12H5) and vacuum drying (12H1) may also be used to make the powder.

coils, electrical - See 13L3.

coins - U.S. dollar, half dollar, quarter, and dime coins are made from clad sheet metal that has copper sandwiched between two layers of nickel alloy (25% nickel and 75% copper). The clad sheet is made by pressure rolling the three clean, annealed sheets together under high pressure. Pennies are made from zinc-copper alloy electroplated with copper. Nickels are made from a copper-nickel alloy. All these metals are produced by suppliers to the U.S. mints and are delivered to the mints as coiled sheet stock, fully annealed, for blanking and coining. Round, coin-size discs are blanked (2C4) from sheets of this stock with multiple blanking dies. The unused portions of the sheet stock are recycled.

The blank discs are annealed, washed, pickled, tumble burnished and inspected by machine vision devices (14D2). The discs are then fed automatically to presses that coin (2D6) the design on both surfaces. Coins with ribbed edges may have these formed by the coining dies or by another press operation after coining. The coins are again inspected and are machine-counted into cloth bags that are stitched closed before storage and shipment.

Coin designs are first rendered as a flat sheet drawing. From these drawings, large size bas relief masters are made by hand sculpturing. The approved master is used to make plaster castings. Rubber molds are made and from these plaster castings, and epoxy masters are cast in the rubber molds. From these masters, coin-size "hubs" or hobs are machined in tool steel by special pantograph milling machines that trace the epoxy masters. The hubs are finished, polished, and heat treated and then used to hub (pressure form) the working dies used in the coining operation.

combs - are made by injection molding. See 4C1.

compact discs - are made from a polycarbonate-based material with a special process that is primarily injection molding (4C1), with an element of compression molding (4B). The injection mold is designed so that slight movement is possible between the mold halves when the mold is closed. After injection, when the material is still soft, force is applied to the mold halves and the mold closes an additional fraction of an inch. This motion impresses in the surface of the disc the fine surface features (pits and lands) that convey the disc's digital information. The disc is then vacuum coated (8F3) with a very thin reflective layer of aluminum (though silver or gold are sometimes used.) In the disc player, the reflection of laser light from this surface provides digital data that is converted to the audio or visual output of the player. A thin coating of clear acrylic plastic is applied to the disc for scratch protection and identifying information is printed on the disc's top surface.

The injection/compression mold for the disc is created from a tape recording of the audio or video material to be incorporated in the disc. From the output of the tape, the recording is changed to a digital format. A glass disc, coated with a bonding agent and a layer of photoresist material, is exposed to laser light that fluctuates in response to the digital data from the tape. When the photoresist layer is developed and etched (See 13A1a and 13K3b1), a pattern of pits and lands is created in the glass surface. The pattern conforms to the sound or visual input from the tape recording. The disc is then vacuum coated with a thin layer of silver and then with a thicker electroformed (2L2) layer of nickel. The nickel layer is removed from the glass disc and its bottom surface now has a negative impression of the master pattern of pits and lands on the disc. This nickel layer could be used as a mold to make production CDs but, in practice, is used as a submaster to make a number of mold inserts using a two-step electroforming process that makes another positive master disc and a number of negative copies of it. These negative copies, suitably reinforced and fitted into precision molding equipment, are used to mold the compact discs sold to the public.

composite structural lumber - See 6F7.

concrete blocks - are made from portland cement, sand, water, and some of the following: gravel, crushed stone, cinders, expanded slag, and vermiculite. Typical ratios of cement, sand and coarse aggregate range from 1:1:3 to 1:3:6 (in the listed order, by volume). These ingredients are mixed thoroughly to the desired consistency and the mixture is introduced to metal molds that are in the shape of the blocks to be produced. When filled, the molds are vibrated to compact the concrete mixture and to eliminate voids. The molds are removed when the cement mixture has set sufficiently. The blocks are then allowed to fully cure over a period of at least seven days.

condensers, electronic - See 13L2 and 13K3a6.

confectioner's glaze - See *candy*.

contact lenses - See *lenses, contact*.

containers, plastic - The injection molding process (4C1) predominates for manufacture of all kinds of containers. Large containers may be molded by one of the structural foam processes (4C3). Blow molding (4F) is used for bottles and similarly-shaped containers.

cooking utensils - are made from a number of different materials: stainless or carbon steel, aluminum and copper in sheet form, cast iron, ceramic materials, and glass. (Glass and ceramic are limited to oven use or for covers. Uneven heating at the stovetop could cause cracking or breaking.) Many different finishes may be applied, and various kinds of handles are used. Stainless steels are usually of the variety with 18 percent nickel and 10 percent chromium.

Cast iron utensils, notably frying pans and cooking kettles, are sand-mold cast (1B). They are typically finished with a black oxide (8E4) oil finish. Aluminum may be cast also, but most aluminum pans are made from sheet material. Cast utensils usually have one or more handles, or brackets for handles as part of the casting.

Sheet metal methods involve blanking (2C4) from coil or sheet stock, and a series of deep drawing (2D5b) and forming (2D2) operations, with annealing (8G2 or 8G5b) between various stages of deep drawing. Some utensils are made by spinning (2F6). The utensils made from sheet material have separate handles.

Ceramic oven utensils are made with the usual ceramic fabrication methods(5B).

Glass utensils and covers are made primarily by pressing (5A2a) borosilicate glass that withstands the temperatures of cooking without fracturing. The glass is also known as Pyrex and is made from 60 to 80% silicon dioxide, 5 to 20% boric acid, 5% fluxes, 2% stabilizers, and small quantities of other materials. These constituents are mixed and melted at a temperature of 2900°F (1600°C), held at a high temperature, for up to 24 hours, formed to shape at a somewhat lower temperature and annealed (5A4a) after forming.

Separate handles are made of various materials and manufacturing methods. One type of handle is compression, transfer, or injection molded of phenolic resin. There may be a sheet metal (stainless steel) reinforcement near the fastening point and a base piece that is welded or riveted to the sheet metal utensil for fastening the handle in place. Handles may also be formed from sheet metal. Some sheet metal handle parts are polished and chromium electroplated.

Handles are fastened with rivets, screws, or by resistance welding or brazing. Filets may be formed where the handle meets the pan.

Surface finishes vary, but there are common approaches for utensils of like material. Many pans are coated with Teflon or other non-stick materials on internal surfaces. Both external and internal surfaces may be porcelain enameled (8F1) but pans with Teflon coatings on the inside surface and porcelain on the exterior are first porcelain coated, and then Teflon coated.

Teflon coating is limited to aluminum surfaces and involves a number of steps: Washing, rinsing, and hydrochloric acid etching of the surface are the first operations. Application of a primer to the surface by spraying and then allowing it to dry are next. Then the Teflon is applied in two coats, allowed to dry in an oven and then fused by gradually heating the utensil to about 800°F (425°C) for about 5 minutes, followed by slow cooling.

Some stainless steel pans are electroplated with copper in the area that contacts the stove flame or heating elements in order to transfer heat more quickly. Some sheet metal pans are polished to a near-mirror finish, usually only on the exterior surfaces. Pans are often polished while rotating in a lathe chuck. Satin finishes, most often put on the bottom or interior, can then be given a symmetrical circular pattern. Aluminum pans may be anodized (8E1) to provide a hard, attractive finish.

Covers are supplied with pans, except some frying pans. Covers are often made from material that matches the pan material except that glass is commonly used for pans of other materials. Metal covers are blanked and formed with several operations, sometimes with in-process annealing to offset work hardening.

Brand and manufacturer information may be impression stamped (8I2) into the bottom of the utensil. (Also see *handles, cooking utensils.*)

copper - Worldwide, about 15 different ores are sources of copper metal. Most contain less than 2% copper but are economically processed because they also yield gold, silver, nickel, and other valuable metals. Chile is the largest source of copper; but much is also produced in the United States. Because of the low metal concentration in the ores, the first step is concentration. This process usually involves crushing (11D, 11D1, 11D2), and ball milling (11D3), followed by flotation separation (11C8b) to remove unwanted minerals and bring the copper content to about 25%. The major North American and English ore is chalcopyrite or copper pyrite. After concentration, this ore is processed by smelting (11K1b2) with sulfur that reacts with the copper, yielding a matte of CuS_2, and FeS and impurities. The matt is melted in a reverberatory furnace (1A4), air is blown through it, converting the sulfur to sulfur dioxide gas and yielding iron oxide and blister copper. Blister copper contains 1 to 4 percent other metals, arsenic, sulfur, and other impurities. It is further furnace refined or electrolytically refined (11C10 and 11K1c2) to produce commercial copper. Fig. C3 shows this sequence.

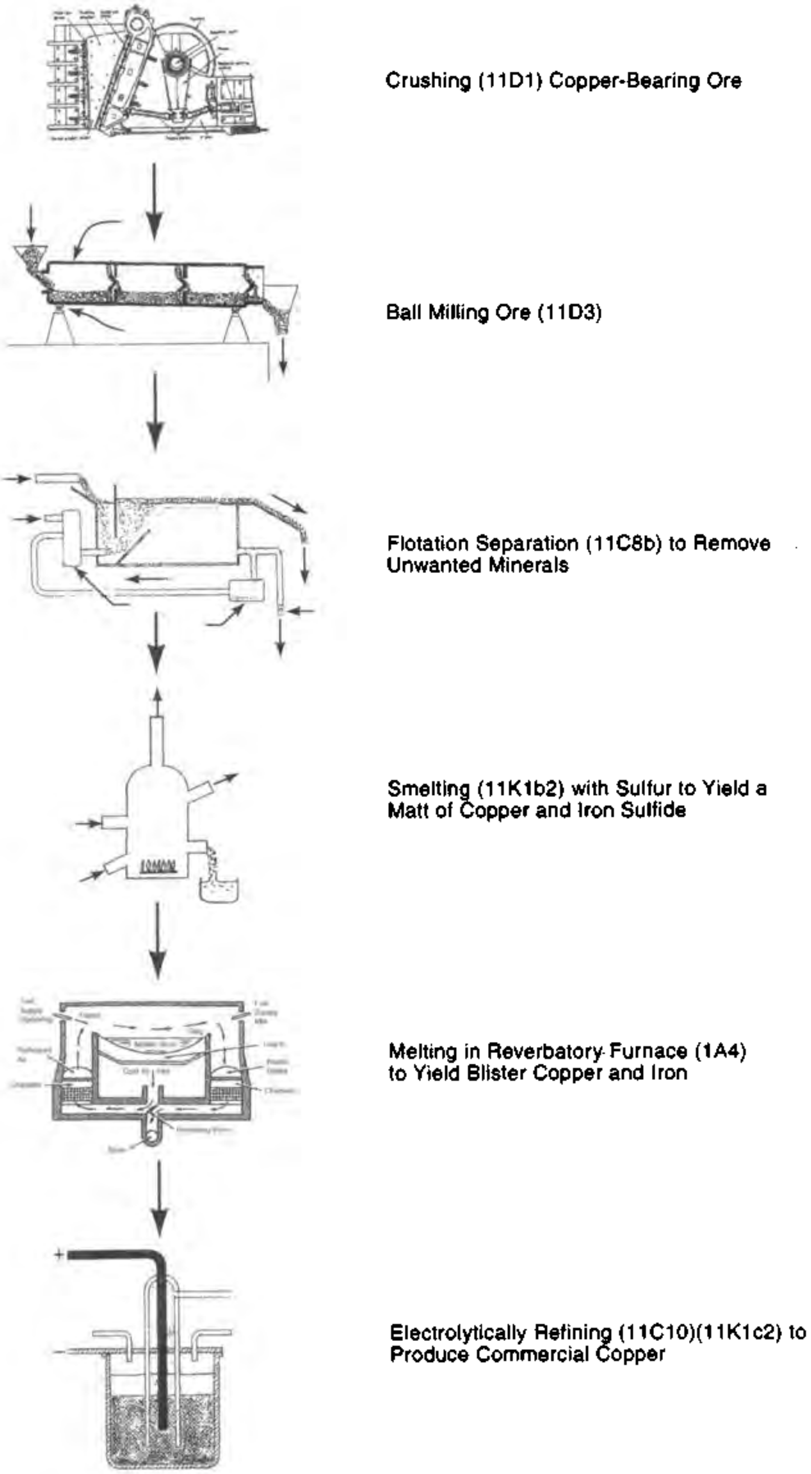

Fig. C3 The manufacturing operation sequence for refining chalcopyrite (copper pyrite) ore into copper.

Another copper ore is chalcocite containing cuprous sulfide, CuS_2, which is processed similarly. Native metallic copper is crushed and washed, cast, and refined.

The desirable properties of copper are its very high electrical conductivity, its malleability, and its resistance to corrosion. Electrical wires, switch and connector parts, pipe and coins, are made of copper and copper alloys. Major alloys are brasses and bronzes.

corn flakes - See *cereals, breakfast.*

corn, frozen - See 12I1.

corn oil - is obtained by expression (See 12E2 and 11C4.) of the germ of the corn kernels. Hulls and kernels of corn are separated with a bath of warm water containing sulfur dioxide. Attrition mills then break the germ from the kernel and the two are separated by flotation. The kernel is washed and dried and the oil is expressed with worm presses. The oil is screened and filtered. Corn oil is used for salad dressings and as a raw material for some soaps.

corrugated cartons - are made from kraft paper (9C5). The first major operation is to produce corrugated board and carton blanks when the board is cut to overall size. The operation takes place on a corrugating machine that typically extends about 300 feet (90 m) in length. A typical corrugating machine is illustrated in Fig. C4. Kraft paper is fed from multi-ton rolls that, with current equipment, can be 98 or more inches (2.5 m) wide. Three sheets of kraft paper are fed to the machine when single-wall corrugated board is produced; one of the three sheets is corrugated; the other two are called outside liners. (See the standard board construction illustrated in Fig. C5). When a double-wall board is to be made, five sheets are fed through the machine. Corrugated inner sheets are formed between a pair of grooved, mating rollers that are heated to a temperature of 350°F (177°C). The corrugations are bonded to the liner sheets with a thin (0.008 in - 0.2 mm) layer of starch-based adhesive, applied to the corrugations by glue rollers. In addition to starch, the adhesive contains caustic soda and borax. The flat liner sheets are heated to about 200°F (93°C) before being glued to the flute tips (ridges) of the corrugations. The sheets are pressed together and the adhesive sets almost instantly, but the bonded board then passes through a machine section for additional pressing between two heated belts for further curing. The board is then slit and cut to length as necessary to make blanks for the cartons to be produced. The blanks are stacked automatically and conveyed to an in-process storage area. Production from machines like this is as high as 1600 ft (485 m) of board per minute.

Fig. C4 A typical corrugating machine that makes either one or two layer boards, slits and cuts them to size for carton blanks and stacks the blanks for future use. The complete machine extends over 280 ft. (90 m) in length.

From the storage area, the boards are fed to machines called, "flex-folder-gluers". When production quantities are high, these machines function automatically. They print identification on the outside board liner sheets, cut slots in the board for carton flaps, score the board where it is to be folded, apply an adhesive to the board near one edge and fold the board so that the four sides of the carton are closed

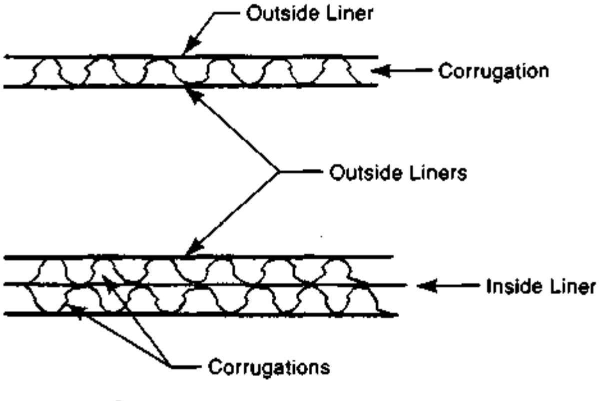

Fig. C5 Construction and terminology of single and double corrugated board.

and the carton is flat. (Note: Cartons are shipped from the factory in flat form. Forming to the box shape takes place where the cartons are filled.) The flat cartons are stacked in bundles of 25, wrapped with a plastic strap and conveyed to a palletizing station. When cartons are produced in smaller quantities, these operations may be performed on several machines with a larger content of manual work.

When the cartons are to be finished in a color other than the standard brown of kraft paper, they are made from rolls of either bleached kraft (white color) or kraft coated with the desired color.

cotton fabric - Cotton fibers come from the soft hairs that surround the cotton seed. The hairs are separated from the seeds by cotton gin machines that consist of a fixed comb and a cylinder with saw-like teeth attached. Raw cotton is fed to the gin and is pulled by the saw teeth through the comb. The seeds, which cannot pass through the comb, are left behind. This operation is commonly performed at a different location than that of the spinning and weaving operations. After ginning, the cotton is cleaned and baled and sold to a textile mill. There, the cotton is processed through the yarn-making steps described in section 10B. These operations include blending, picking, carding, combing (sometimes), drawing, and spinning. The cotton is then normally woven on looms (10C) or knitted (10D), finished (10F), and made into garments or other products (10H).

cottonseed oil - See *margarine.*

crayons (wax) - are made from paraffin wax, colored with solid powder pigments. The wax is heated to the melting point (about 240°F - 115°C) and mixed with the pigment (a batch for each crayon color) so that the color is evenly distributed. The crayons are cast in open flat bed molds. Each mold has many deep pockets for the crayons. When the wax in the pockets has cooled and hardened, excess wax in the flat bed is scraped off and removed. This operation is mechanized. The crayons are expelled from the cavities by ejector pins and are fed to a labelling machine that wraps a pre-printed label on each crayon. They are checked for completeness of casting and for proper label position and are fed to a packing machine. The machine has separate feed magazines for each color in the package, 12 feed magazines for an package of 12 assorted-color crayons. The machine fills the packages, closes it, and inserts them in shipping containers.

crepe fabric - See 10F3g.

crystal, lead glass - See 5A1.

cups, plastic, disposable - Three major processes are used in the production of common plastic drinking cups. The most common method is thermoforming. Because of the large depth-to-width ratio of these cups, they are produced by either the plug-assist method (4D4), the slip-ring method (4D6), or the vacuum snap-back method (4D5). Injection molding (4C1) is also very common. Insulated foam-plastic cups are made with the expanded polystyrene foam bead molding process (4C4 and 4C4b).

cups, paper - See *drinking cups, paper.*

cut glass - See 5A5b.

D

denim - is a twill-woven (10C and Fig. 10C-1) cotton fabric, usually with the warp yarns dyed blue (10G1). (The filling threads are white.) Denim is usually all-cotton, but some is made with a cotton-synthetic fiber yarn. The twill weave provides good durability. Denim is used for jeans, overalls, trousers, and other garments. Denim yarn or fabric is sometimes sized (10F4a).

detergents[4] - There are many different types of detergents, including soap. Detergents work with water as a soil remover by acting as an emulsifier and surfactant, breaking up oily films and helping the water to penetrate particles of soil. The most common synthetic detergents are the anionic type, which are usually the sodium salts of organic sulfates or sulfonates.[4] Frequently used raw materials are fatty alcohols (from tallow - animal and vegetable fats) or alkylbenzene (from petroleum). These materials are reacted with sulfur trioxide gas, made either by burning sulfur or by vaporizing sulfuric acid anhydride. After the reaction with sulfur trioxide, (SO_3), the fatty alcohol becomes fatty alkyl hydrogen sulfate and the alkylbenzene becomes alkylbenzenesulfonate. These are then treated with caustic soda, (NaOH), to neutralize the acidic compounds present. Other ingredients that may be used are sulfuric acid, oleum ($H_2SO_4 \cdot SO_3$), sodium silicate as a corrosion inhibitor, sodium tripolyphosphate and water. There are other miscellaneous additives that are used to improve brightening or bleaching and to provide a pleasant odor. An illustration of the detergent-making process and equipment, in greatly simplified form, is shown in Fig. D1. Other types of detergents, less used, are nonionic, ampholytic and cationic types.

diamonds, synthetic - are produced by several companies with proprietary processes. Most synthetic diamonds are made from graphite, which is subjected to a pressure of 750,000 psi (5 GPa) at temperatures of approximately 2700°F (1500°C)

Per Shreve[4], the General Electric process involves heating and pressurization, apparently of graphite, for a number of minutes in a catalyst of a molten "group VII metal alloy," apparently a nickel alloy. Temperatures are approximately 2000 to 2700K and pressures from about 9400 to 16,700 psi (65 to 115 MPa) are applied. Different types and sizes of diamond crystals are formed from different pressures, temperatures, time, catalysts and solvents. Crude pieces are cleaned and graded by size and shape.

Per Brady[2], the early GE process, developed in the 1950's, subjected graphite to pressures of 800,000 to 1,800,000 psi (5.5 to 12.4 GPa) at temperatures of 2200 to 4400°F (1200 to 2430°C) with a molten metal catalyst of aluminum, cobalt, nickel or another metal. These formed a film around the growing diamond crystals. More recently, GE is reported to use chemical vapor deposition with methane gas, enriched with additional carbon, to deposit a sheet of polycrystaline diamond. The sheet is then crushed and used as source material in the high pressure, high temperature process. DuPont makes synthetic diamonds with an underground explosive process. It produces pressures of 2,000,000 to 7,000,000 psi (14 to 48 GPa). Then, a series of chemical and mechanical steps extract a powdered diamond which is cleaned, sorted and shaped. Particle sizes range from 3.9 to 2,300 micro inches (0.1 to 60 microns).

Synthetic diamonds are used to provide cutting action on saws, in grinding and polishing wheels for hard substances, and for honing and lapping operations.

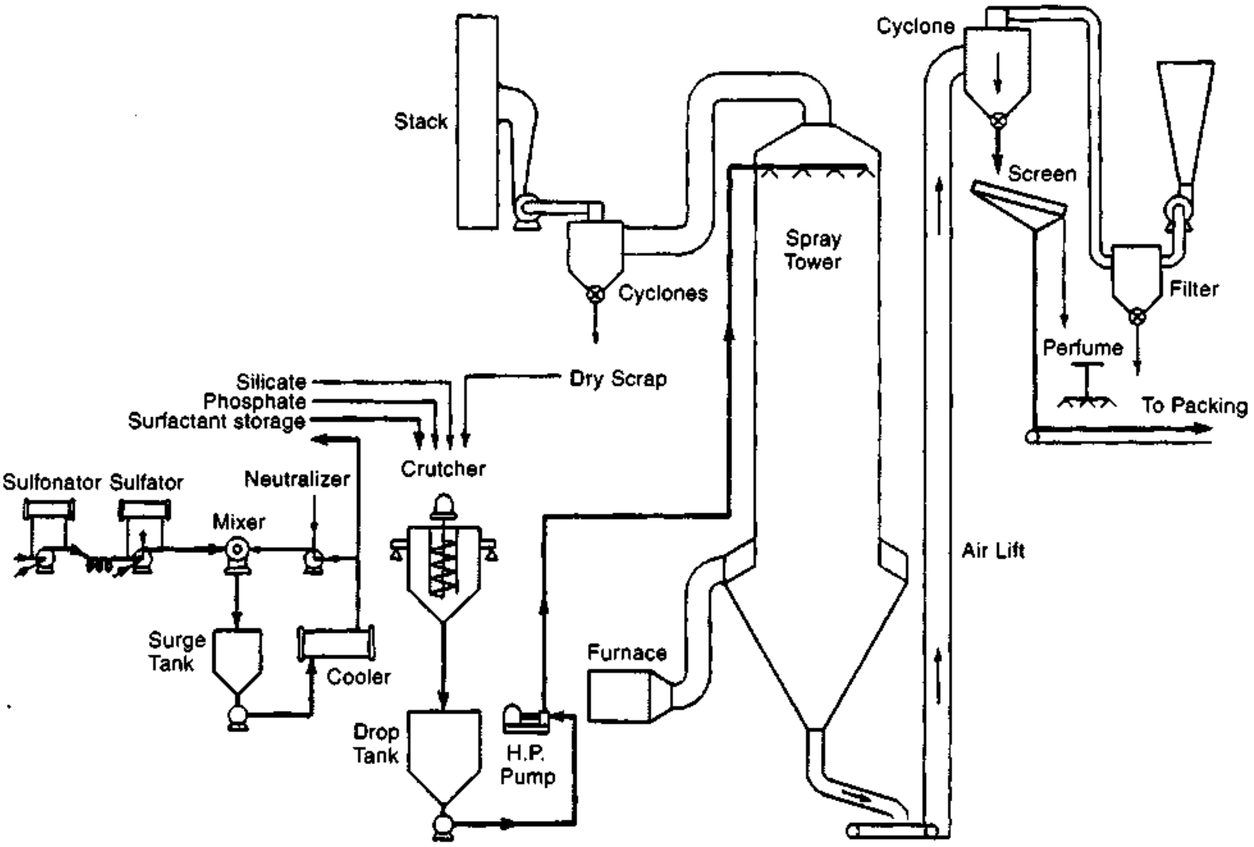

Fig. D1 A simplified flowchart for the continuous production of a heavy-duty detergent in granular form. (*The Procter and Gamble Company.*)

Diamond coatings for military and aerospace applications and cutting tools are made in low-pressure, very high temperature chambers by chemical vapor deposition (CVD) (See 8F3b.) from hydrocarbon gases with added energy from plasma, microwave or other sources. These films have excellent heat transfer ability, transparency to infrared and visible light and high electrical resistivity in addition to diamond hardness.

diesel fuel - See *fuel, diesel.*

digital video discs (DVDs) - A significant amount of preparation is required before a motion picture can be reproduced on a digital video disc. The film is first photographed, frame by frame with a digital camera. The digital data thus obtained is recorded on tape. The tape is processed by a video encoder to compress it, that is, minimize the amount of digital data required to define the images and the space that they will require on the disc. The motion picture then goes through the "authoring" process where a skilled technician customizes it for presentation, adding subtitles as necessary and perfecting the stereo sound. The complete presentation is checked and, if satisfactory, the finished digital tape is sent to the disc factory for production by the following steps: 1) Laser equipment (8I5 and 3O) is used to transfer the data from the tape to a thin, polished glass disc which has previously been coated with a photosensitive material. 2) The glass disc (master disc) is developed chemically, leaving minute pits, 0.00002 to 0.00008 in (0.5 to 2 microns) wide where the coating was activated by the laser. These pits have a digital pattern that corresponds to the picture, subtitles, and sound of the motion picture. 3) The glass master disc is immersed in a bath that deposits a thin coating of nickel by electroless plating (8C2). Then, a further, much heavier, coating of nickel is added using electroforming (2L2) and electroplating (8C1) processes. 4) The nickel layer is removed from the glass master and may be assembled as part of a mold for injection molding of plastic. Alternatively, it may serve as a sub-master for further electroforming to make inserts for production molds. The mold, then, has high spots that correspond to the minute pits in the glass master. 5) Polycarbonate plastic discs are injection molded (4C1) in this mold. The discs have minute pits equivalent to those in the glass master. 6) The plastic discs are given a very thin coating of aluminum or gold by sputtering (8F3a). 7) The disc is assembled and adhesively bonded to another disc which may or may not have data on its other surface. 8) The disc is labeled by offset printing (9D2a). 9) Discs are assembled into packages with accompanying leaflets. These are shrink wrapped and inserted with other copies of the disc into shipping cartons, which are sent to warehouses or stores.

dinner plates - See *chinaware.*

diodes and transistors - See 13L5 and Fig. 13L5.

dishes, china - See *chinaware.*

dishes, glass - are made by glass pressing (5A2a) and annealing (5A4a).

dishes, plastic - picnic dishes are normally either vacuum formed (4D1) or injection molded (4C1). (Those with dividers are more likely to be injection molded.) Other plastic dishes are compression molded (4B1) of urea or melamine. Decoration of such dishes is normally by in-mold methods (4M5).

distilled spirits (distilled liquors) - include whiskey, brandy, gin, vodka, rum and other liquors. Brandy is a liquor distilled from wine; applejack is distilled from hard cider. Distilled spirits are produced with two major operations, fermentation (12J4), wherein sugars and other carbohydrates are converted to alcohol, and distillation (11C1), in which the ethyl alcohol content in the beverage is increased. The first steps in whisky-making, before distillation, are the same or similar to those of beer brewing. The making of distilled spirits starts with the collection of a fruit, a sugar-bearing plant, or a grain or other starch-bearing plant material. Foods that are used include grapes, peaches, pears, apples, apricots, sugarcane, sugar beets, honey, molasses and juice from a cactus, These foods are all sources of sugar. Wheat, rye, corn, rice, barley and some roots are sources of starch. These foods are converted to juice by squeezing, crushing, or cooking in water, or by a combination of these methods. The sugary juices are available for fermentation, but juices from starchy materials must first have their starch (carbohydrate) converted to sugar. This is done by introducing an enzyme to the liquid. The enzyme formed when barley grain begins to sprout is one that is used. (See *beer.*)

Yeast is another enzyme that enters the process and it is used to convert the sugar in the mixture to ethyl alcohol during fermentation. Fermentation produces drinks of low or moderate alcohol content (up to 12%). When the fermentation is complete, distillation can then be used to increase the alcoholic content. The complete process normally has other steps: filtrations to separate the liquid from solids, heating or cooling of the liquid to facilitate some of the operations, the addition of some flavoring or coloring material, and the blending of several different liquors to provide a standardized or desired flavor. (Distillation requires considerable heat energy.) Aging is an important operation for some liquors, notably whiskies, brandies, and some rums. It is done in oak casks, sometimes casks that are charred on the inside. Flavor and alcoholic content of the liquor may change during aging, depending on the cask, how much it has been used previously, and the temperature and humidity of the storage area. The final operation is bottling (12L). In modern high-production distilleries, this is highly automatic, including placement in shipping containers. Fig. D2 shows the full operation sequence for the production of whisky and gin.

downspouts, roof - most frequently are made from either vinyl plastic or sheet aluminum. Vinyl downspouts are made by profile extrusion (4I1) of a mineral- and pigment-filled PVC material. Elbow fittings to direct the water flow at ground level and fittings to connect the downspout to roof gutters are injection molded (4C1) of essentially the same material. Holding brackets are also injection molded.

Aluminum downspouts are contour roll formed (2F7) from coiled aluminum sheet stock, slit to the width needed, and painted (before forming).

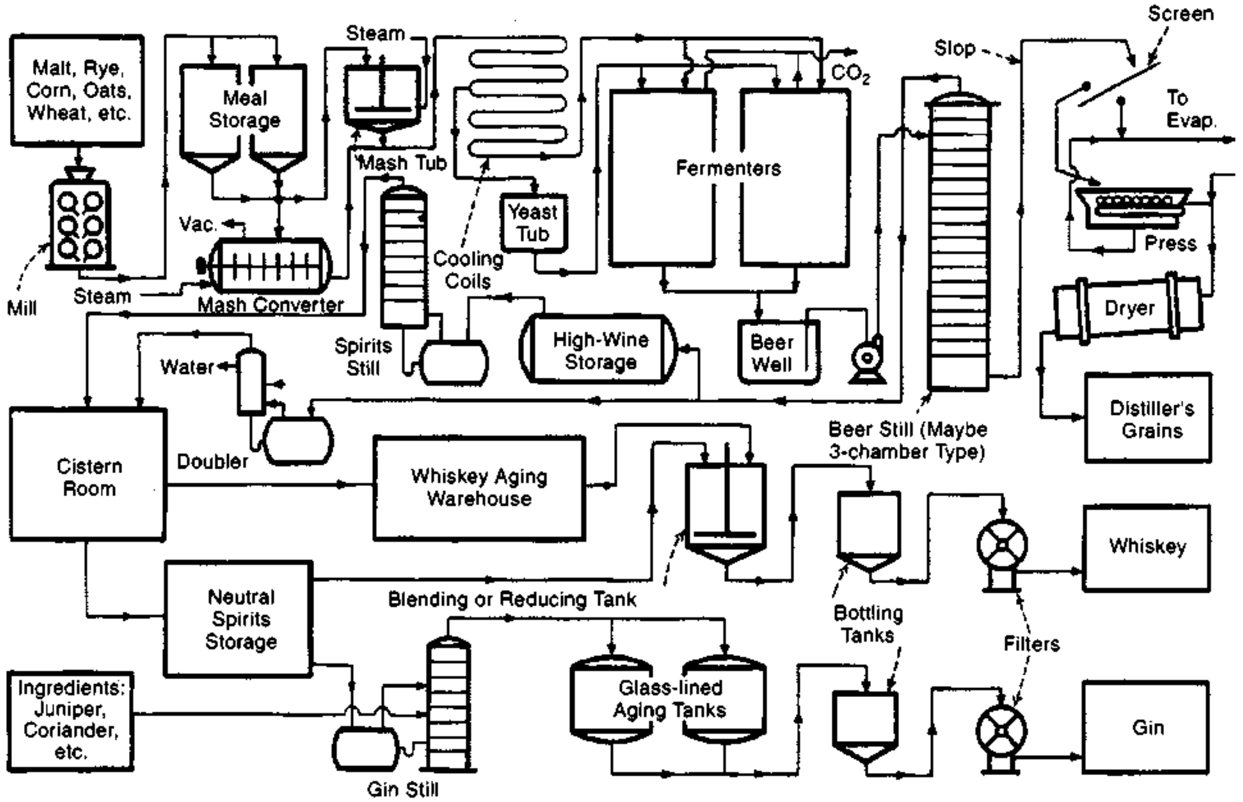

Fig. D2 The operations involved in the manufacture of distilled spirits (*from Shreve's Chemical Process Industries, 5th ed., G.T. Austin, McGraw-Hill, New York, 1984. Used with permission.*)

Painting is commonly on both sides and the edges by immersion of the sheet stock in a paint bath. As the sheet emerges from the bath, excess paint is blown off with air knives. Another method, if a different color is used inside the part, is roller coating (8D2 and Fig. 4K1b-view b). The contour rollforming operation bends the sheet around to a square cross section, and then bends and closes a lock seam joint to hold the edges together, forming a square conduit. Holding brackets for aluminum downspouts are made by blanking and forming parts from the same precoated aluminum stock and riveting two such pieces together. This operation is performed on special press equipment. Elbows are made from short lengths of downspout, which is wrinkle bent to near 90 degrees. The operation is preformed on a special press set up. The tooling provides preliminary deformation and, as the part is bent, a series of wrinkles form on the inside of the bend.

drill bits - are made from high-carbon, tool-steel drill rod. It is heat-treated to a hardness of Rc 62 and centerless ground to a diametral tolerance of ±0.0005 in (0.013 mm). (See 3C1b.) Flutes are ground into the rod in a spiral pattern with special form grinding machines using creep feed grinding. (See 3C3c.) Larger drills are flute ground with wheels dressed to grind the flutes, grind relief in the flutes and leave a narrow land, all in the same pass. The drill is then given a black oxide treatment (8E4) and the point is ground and sharpened in a special cam-operated grinding machine. If the drill is large, the shank may be tempered to reduce its hardness and increase its toughness. Size and other identification is then usually marked on the drill by acid etching, but may, instead, be pressure imprinted before heat treatment and centerless grinding.

drinking cups, foam plastic - are made with the expanded polystyrene foam bead molding process (4C4b).

drinking glasses - are made by glass pressing (5A2a) or, sometimes, machine blowing (5A2b3) often followed by annealing (5A4a).

drive screws - See *screws.*

drums, 55 gallon - Plastic 55 gallon drums are extrusion blow molded (4F1).

dry cells - See *batteries, flashlight.*

dry ice - is the solid form of carbon dioxide gas. Carbon dioxide, from a number of possible sources, is purified and then liquified by compression and refrigeration to a temperature of −71°F (−57°C) or lower. The pressure is then reduced to the atmospheric level, allowing expansion and adiabatic cooling, causing the liquid to partially solidify into snow-like flakes. These are compressed together to form a cake which is then cut into blocks of the desired size.

ductwork, steel - is usually custom made with job shop forming methods, from galvanized sheet steel or sheet aluminum. Squaring-shear cutting (2C1a), notching (2C5b), nibbling (2C2) and turret punching (2C5a) all may be used to make sheets of the desired size and shape. The sheets are then formed, normally with job-shop bending and forming methods. Operations and equipment used includes press brake bending (2D1a), flanging (2D8), beading (2D9), hemming and seaming (2D10), edge curling (2D11) and three-roll forming (2H2f). Some ready-cut and preformed pieces, available at hardware stores and home centers, are made from coiled sheet stock on contour roll forming equipment (2F7).

ductwork, plastic - Plastic ductwork for automotive applications is extrusion blow molded (4F1).

DVD's - See *digital video discs.*

dyed fabrics - See 10G1.

dyes - are intensively colored complex organic chemicals that are used to color other materials and products. The term "dye" pertains particularly to colorants that are in liquid form. Although dye chemicals occur in nature, almost all current production is of synthetic dyes made by chemical processes. One exception is logwood, derived from the heartwood of a Central-American tree and used to dye some fabrics dark black. Synthetic dyes are made from coal tar or petroleum but coal tar predominates. The sequence for production of dyes includes the use of aromatic hydrocarbons such as benzene, toluene, naphthalene, anthracene, xylene, and some paraffins made from the distillation of petroleum[4]. These compounds are made into chemical intermediates that are used as materials for dye production and, in many cases, for other uses. The intermediates, also made with petroleum refining methods, include styrene, ethylbenzene, cumene, phenol, p-xylene, cyclohexane, and numerous other materials. They are chemically converted to dyes by a variety of operations that depend on the particular chemistry of the dye produced. Azo dyes, which have an ·N:N· linkage, constitute a large portion of dye production. They are produced by diazotization of primary arylamines which is followed by reaction with phenols, aromatic amines, and enolizable ketones[2].

The most important use of dyes is to impart colors to textiles. (See Dyeing, 10G1.) Other products that are dyed are paper, leather, food and cosmetics.

dynamite - a solid explosive made by absorbing nitroglycerine (a liquid) in a "dope" of wood flour, sawdust, starch, wheat flour, or other similar materials or a combination of some of them. The solid dynamite permits safer and easier handling than that achieved with liquid nitroglycerine which is unstable and apt to explode during handling. The nitroglycerine ($C_3H_5(NO_3)_3$ is made from the nitration of glycerol with a mixture of sulfuric and nitric acids followed by the removal of the acid from the mixture. Sodium nitrate or ammonium nitrate may be added to the mixture to increase its explosive power. A small amount of calcium carbonate or zinc oxide may also be added to the mixture. When these ingredients are mixed, the material is ready for packaging. This is done by pressing the mixture in a paper tube, and sealing it with wax. The assembly constitutes a "stick" of dynamite. Various sizes are made but a diameter of 1 1/4 in (32 mm) and length of 7 7/8 in (20 cm) are common. Because of the danger from an unwanted explosion, many special arrangements for the production equipment, plant layout, storage facilities, and work procedures are made for the above operations. Dynamite has largely been replaced by other explosives. Nitroglycerine also has a medical use to induce dilations of blood vessels.

E

edible oils - See *oils, edible.*

elastomers - are plastics with rubber-like properties. See 4O2.

electrical wire - See *wire, electrical.*

electricity - Most electricity is produced by devices, called generators, that convert mechanical energy into electrical energy. Whenever a wire passes through a magnetic field, current is induced in the wire. An electrical generator is a device made to optimize this effect so that the electrical energy developed can be utilized. Generators contain coils of electrical wires, attached to a shaft. When the shaft and coils rotate, the coils pass through a magnetic field and electric current flows in the wires. The mechanical energy that turns the generator can come from one of a variety of sources. With hydroelectric power, it comes from water turbines spun by the force of water falling or under pressure from a dam. With most commercial generating plants, the power is supplied by steam or gas turbines. When steam turbines are used, the energy for converting water to steam comes from the combustion of coal, oil or natural gas. It also comes, in many power plants, from nuclear sources. A pressurized water reactor system to generate electricity from steam is shown in Fig. E1. Diesel and gasoline engines are also used, usually in smaller installations. Automotive generators or alternators work in the same way to provide electricity to charge the car's storage battery.

Storage batteries, dry cells and other electrical batteries generate electricity by converting chemical energy into electrical energy. Chemical reactions release electrons that flow from the battery terminals as electric current.

electric light bulbs - See *light bulbs* and *fluorescent lights.*

electric motors - See *motors, electrical.*

electric transformers - See 13L4.

electrical wire - See *wire, electrical.*

enamel, vitreous[4] ***(porcelain enamel)*** - is a colored glass coating, formulated with low enough melting temperature so that it can be used as a protective and decorative coating for metal and ceramic appliances, other products and artwork, including glass artwork. (When used with ceramics or glass, the enamel is referred to as a *glaze.*) The materials used to make vitreous enamels are clay, quartz or feldspar, fluxes (to reduce the melting temperature), metal oxide coloring and opacity agents, and other agents. The raw materials are mixed, pulverized and ground so that the particles are small enough to pass through a 200 mesh screen. See F1, porcelain enameling, in Chapter 8 for a summary of the application methods.

Vitreous enamel coatings are common on stoves, bathtubs, cooking utensils, outdoor signs, architectural panels, chemical process equipment, automobile exhaust parts, jewelry, and vases, bowls, cups, and other ceramics or glassware. (See 5A5i for its use as a decoration on glass objects.)

enclosures, shower - Plastic shower enclosures are most commonly made by the spray-up method with fiberglass reinforced polyester (4G2).

engineered lumber - See 6F7.

engine blocks - The major component of an internal combustion engine is the engine block, normally a sand cast (1B) part, made, in high production conditions, by the flaskless method (1B3g). Engine block castings are extensively machined. The surfaces for the cylinder heads are milled (3D) or

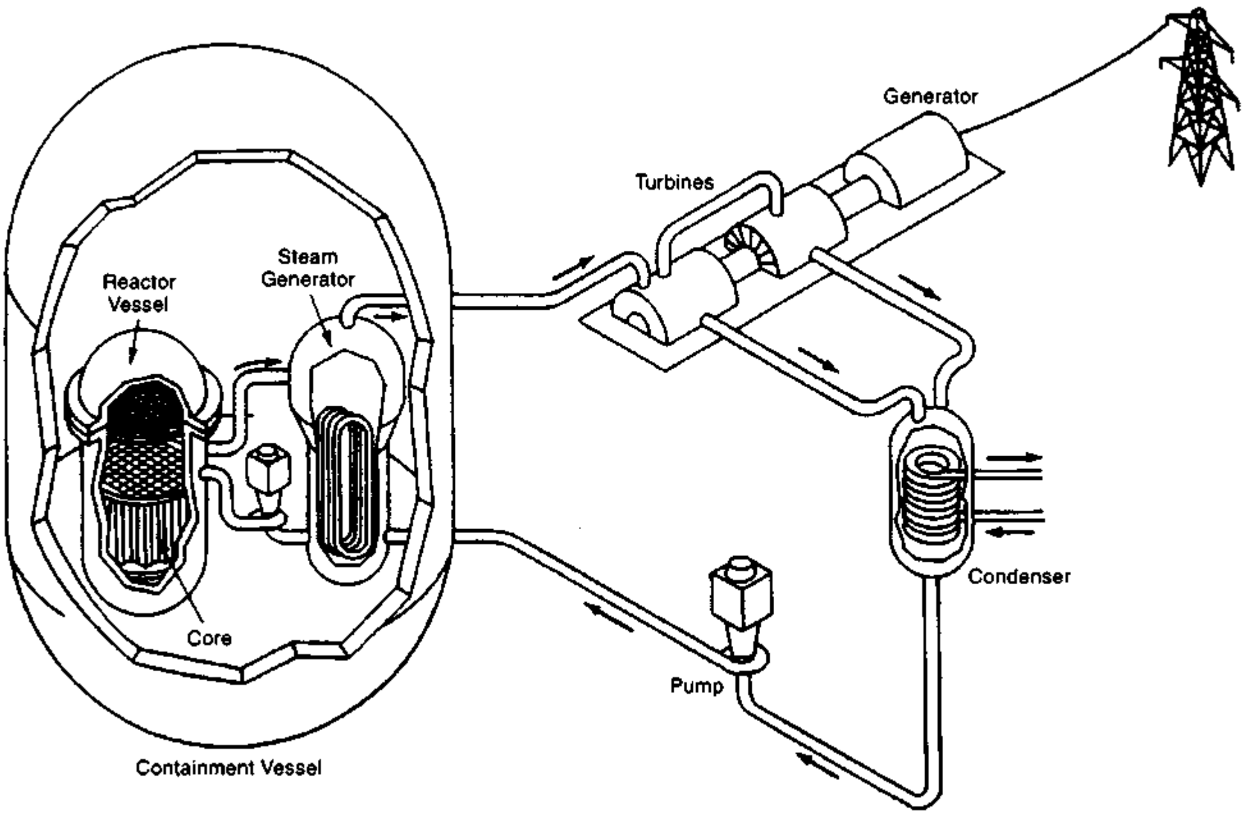

Fig. E1 Schematic illustration of a pressurized-water nuclear reactor. Water flows through the reactor vessel and, though it becomes very hot, does not turn to steam because it is under high pressure. It also does not leave the containing vessel but is circulated through a heat exchanger. In the heat exchanger, it transfers its heat to water in the other circuit of the exchanger. That water turns to steam and drives a steam turbine that, in turn, drives an electrical generator. (*Illustration from U.S. Department of Energy, Publication DOE/NE-0029, 1982.*)

broached (3F). The cored cylinder holes are bored (3B5) and honed (3J1). There are other milling, drilling (3B1), reaming (3B4), boring, and tapping (3E2) operations. In high-production situations, which usually exist in the automobile industry, these machining operations are performed by special purpose equipment (3X) on transfer-lines (3Y). At lower production levels machining centers (3T) are used.

envelopes - are all made on machines designed specifically for envelope making. Paper in rolls is fed to one end of the machines and travels rapidly through the various stages of the operation. Completed envelopes, packed in boxes, exit from the other end. The machines cut the paper to the size and shape (usually a rhombic shape), apply glue to the overlapping areas, fold the paper where necessary, seal the joints, apply gum adhesive to the flap that is to be closed by the user, print postal information and the return address as specified and pack the completed envelopes in boxes. Most machines are modular so that printing, packing, transparent window, metal clasp assembly, and other elements, can be added or removed. (Some machines print on the paper before cutting; others print on the formed envelope.) Most also can be set up to make envelopes of different types and sizes. Speeds of production equipment range up to a maximum of about 500 envelopes per minute for smaller, simpler machines and as high as 1500 per minute for the highest speed, most advanced machines. Such machines are of extended length and require a major capital investment.

epoxy[4] - The basic resin is most commonly made from a polymerization reaction of bisphenol A (made from phenol and acetone), with epichlorohydrin. (Epichlorohydrin is made from allyl chloride.) To cure the resin into a solid, it is mixed with a curing agent. Amines, acid anhydrides, or mercaptans are used. They cause the epoxy molecule chains to lengthen and cross-link. Epoxies are used as adhesives, coatings, potting compounds for electrical devices and in laminated boards for printed circuits. (Also see *epoxy* under *adhesives.*)

essential oils - See *oils, essential.*

etched glass - See 5A5f.

ethanol - See *alcohol, ethyl.*

ethylene (ethene) - a gas, is an important raw material. It is constituent of natural gas and occurs in petroleum. It is most commonly made by fractional distillation (11H1a) and cracking (11H2a) of petroleum. Ethylene is also derived from natural gas. In one method, ethane, another constituent of natural gas, is steam cracked at a temperature of 1550°F (840°C) and a pressure of 24 psi (165 kPa) to produce ethylene. Ethylene is the raw material for polyethylene plastics and in making trichloroethylene, a powerful solvent and degreasing material.

explosives - See *dynamite.*

eyeglasses - Eyeglasses with plastic frames are made with one of two methods:

The most prevalent method for the frames is injection molding (4C1) where both the part that holds the lenses, the front, and the two pieces that hook around the user's ears, the temples, are injection molded to almost the final size and shape needed. The temples may be molded with metal wire inserts for reinforcement (4C6). Hinges are normally formed and machined from a brass alloy in three pieces per hinge, two half-hinges and a connecting screw. Special equipment is used. Little or no machining is required of the molded components, but tumbling with abrasive (8B2) is used to remove mold parting line flash and to enhance the smoothness and polish of the frame parts. Hinge parts are assembled and bonded to the plastic parts by ultrasonic insertion (4N1b).

The other method is much more labor intensive and its use is limited to higher-priced eyeglass frames. The fronts and temples are blanked from a heated sheet of plastic, approximately 1/3 in (8 mm) thick, with steel rule dies (2C4a) or other blanking dies. The plastic usually is cellulose acetate. (See *cellulose acetate plastics.*) The undercut groove that holds the lenses in the frame is milled with a router-like cutter. The standard groove width is 1/6 in (4.2 mm). The edges of the pieces are rounded and smoothed by routing machines and by hand operations. With the aid of a fixture, nose pieces are bonded to the insides of the front piece and the adhesive is allowed to cure for 24 hours. Then further grinding smooths the area of the joint. At another machine and fixture, a slot is machined into each end of the frame at the proper angle. Half of a metal hinge for each temple is positioned in each slot and bonded with ultrasonic welding (4L4). The two temples are heated and a steel reinforcing wire is pressed into the core area of each to provide reinforcement. Then the temples are cooled and machined at the frame ends to fit the other half of the hinges. The other half of each hinge is inserted ultrasonically. The hinges are covered with protective caps and the parts are then thoroughly tumbled with pumice and other media to further round and smooth their edges. Tumbling continues for 24 hours. The frames are heated again and bent in a press operation to the curved shape needed. Then the frames and temples are tumbled again repeatedly with progressively finer abrasive and finally, with wax, to polish their surfaces. The temples or fronts may be hot stamped (4M2) on an inside surface for product identification. Finally, the parts are packaged for shipment to dealers who install lenses and assemble the temples to the fronts.

For manufacturing information on eyeglass lenses, see *lenses.*

F

fabrics, anti-shrink - See 10F5a.

fabrics, dyed - See 10G1.

fabrics, knitted - See 10A, 10B and 10D.

fabrics, flocked - See 10F31.

fabrics, non-woven - See 10A, 10B and 10E.

fabrics, permanent press (wash and wear) - See 10F5b.

fabrics, printed - See 10G2.

fabrics, stain release - See 10F5d.

fabrics, woven - See 10A, 10B and 10C.

felt - a non woven fabric made from wool, fur, other hair fibers or synthetic fibers. Felt was previously used extensively as a hat making material and is currently used for industrial purposes and where padding is needed. (See 10E, *non-woven fabrics.*)

felt-tip marking pens - See *marking pens, felt tipped.*

fertilizer - Currently manufactured fertilizers have three major ingredients: nitrogen, phosphorous and potash (potassium carbonate - K_2CO_3 or $K_2CO_3{:}H_2O$). Superphosphate is one fertilizer that contains approximately 12% of each of these three ingredients. Superphosphate is made from phosphate rock that is treated with nitric or sulfuric acid, then reacted with nitrogen to neutralize the acid and add nitrogen. Potash salts are then added. Trace quantities of other elements, needed by plants in very small quantities, may also be added.

Ammonia, in liquid form is used as a direct-application, nitrogen fertilizer. Ammonium nitrate, ammonium sulfate, ammonium phosphate, sodium nitrate, potassium nitrate and urea are other nitrogen compounds used in fertilizer. Phosphate rock from Florida is a major source of phosphate, but animal bones are a minor source and basic slag from steel mills that use phosphatic ores are also sources. Other potassium compounds may be used in place of potassium carbonate. Potassium chloride (KCl), also called potash, is used in fertilizer and is mined in combination with sodium chloride as sylvinite. The potassium chloride is separated out by making use of its changes in solubility in sodium chloride at different temperatures.

fiberboard, low density (insulation board) - See 6F6.

fiberboard, medium density - See 6F6.

fiberglass insulation - fiberglass wool (5A6d) is sold as matt for insulation purposes. It is often adhesively bonded to asphalt-coated kraft paper (9C5) which serves as a vapor barrier.

fibers, glass - are made by a number of different methods, depending on the use intended for the fibers. See 5A6, 5A6a, 5A6b, 5A6c and 5A6d. For optical fibers for general light transmission, see 5A6e, for data transmission, see 5A6f.

fibers, textile - See 10A.

fibers, optical - See 5A6, 5A6e and 5A6f.

fibers, synthetic - See 10A2 and 10B6.

fiber, vulcanized - See 9C6.

film, photographic - previously made from cellulose acetate, photographic film is now made from polyester which is stronger and thinner. In liquid form the polyester is poured onto a highly polished metal belt. The solvent carrier evaporates leaving a thin plastic film. The film is then coated with light sensitive chemical compounds: silver halides, organic photoconductors, diazo compounds, amorphous selenium and zinc oxide.[4] Several layers of light-sensitive materials may be used if the film is made for color photography.

film, plastic - (See section 4I5.)

filters - (See filtration, 11C7b.) are made from many materials. All have openings of some size to permit the passage of a desired gas or liquid, but which are not large enough to allow passage of solid materials of a specified size. Common filter materials are: woven fabrics, non-woven fabrics, felt, cotton batting, filter papers, sintered metals, ceramics, glass or graphite, animal membranes, plastic membranes, granular beds, usually of sand or diatomaceous earth (powdered chalk-like rock) and the solid particles that are in the liquid to be filtered.

Woven fabrics, commonly of canvas, synthetic yarns, or metal wire, are made with common weaving methods (10C). Metal screens are similarly made.

Non-woven fabrics and felt are made with methods described in 10E.

Some filters are made by sintering processes in which powdered material is pressed to shape and then heated to bond the particles together. Small spaces between particles provide a path for the filtrate. These filters include those of metal made with powder metal processes (2L1), fritted glassware (5A8a and 5A8c), and ceramic filters, made from ceramic powder (5B). With all these materials, careful control of particle size, the compression of the powder and the degree of sintering are necessary in order to provide the needed size of path openings for the filtrate. In glass filters, the sintered material may consist of glass fibers rather than glass powder. Ceramic filters are used in metal casting and for diesel engine exhaust.

Pores in ceramic filters can be produced by one of the important methods: foaming, the plastic sponge method, and extrusion.[13] In the foaming method, the ceramic material is mixed with an organic foaming agent. The mixture is pressed to shape and processed to cause the agent to release a gas. The gas bubbles create openings in the mixture. After drying and firing, the workpiece has a permanent porous structure and is suitable for use as a filter. Extrusion (5B7) is used to make filters with a honeycomb-like structure having small openings. After the extrudate is cut to size, dried and fired, the openings allow passage of the filtrate but not solid particles larger than the openings. In the plastic sponge method, the following manufacturing sequence is used: A suitable sponge of plastic material (polyurethane, a cellulosic polymer or PVC) is selected. The sponge is immersed in a slurry of fine ceramic particles and water. (The sponge is compressed both before and after immersion in the slurry, so that all pores are filled with the right amount of the ceramic slurry.) The filled sponge is then oven-heated and dried, and then is further heated to a temperature high enough burn off the plastic sponge material. This leaves an all-ceramic material with many pores and passages in the space formerly occupied by the sponge. The workpiece is then fired to fuse the ceramic particles.

Membrane filters are used in ultra-filtration, dialysis, and reverse osmosis. See 11C7c. Membrane materials include cellulose acetate, polyamides, polysulfone, polytetrafluorethylene, polyvinylidene fluoride, and polypropylene. Micropores are induced into the membrane by stretching, or by a thermal process[3].

Filter paper is made from longer fibers than are incorporated in standard papers. Sometimes, other fibers such as glass are used for reinforcement. (See Chapter 9 for details of paper manufacturing.)

finger-jointed lumber - See 6F7.

fireworks - The principal ingredient in fireworks is black gunpowder, which contains potassium nitrate (saltpeter), charcoal, and sulfur. The potassium nitrate supplies oxygen for the explosive reaction and the charcoal is consumed. The sulfur does not burn but facilitates the combustion. Metal salts may be added to provide the colors red, green, yellow, and blue. Powdered or flaked aluminum and magnesium add brilliance. Aerial display fireworks have a charge for firing the shell, another charge to burst it open, and a third charge to provide the sound. Shells are cylindrical or spherical in shape and are made from multiple layers of heavy kraft paper, bonded with wet paste, shaped when softened by the moisture, and allowed to dry. For aerial display fireworks, numbers of small containers, "breaks", are incorporated into the large shells; they provide secondary bursts of visual and sound effects in the display. String is used to bind and hold the breaks. Safety is essential in fireworks manufacture. Sparks, friction, and inadvertent mixing of materials are carefully avoided. The mixing of the chemicals and their assembly into shells or containers is largely a manual operation because of concerns about sparking and frictional heat from powered equipment. The operations are performed in small one-room buildings which are widely spaced on the factory grounds for safety reasons. Even lubricating oil can cause problems by reacting with the explosive materials.

fishing rods (poles) - consist of the rod itself, a mounting seat for the reel, a handle, and a series of guides for the fishing line. The rods are made with a composite construction similar to that used in composite golf club shafts. (See *golf clubs*.) The predominant manufacturing method consists of wrapping steel mandrels with epoxy-impregnated carbon and glass fiber fabrics, curing the resin, and then removing the mandrels. (See Fig. F1.) Other methods are pulforming (4G12) a variant of pultrusion (4G11) with carbon or glass fiber reinforcement or a combination of both. E-glass fiber is used more in fishing rods than in golf clubs because it provides more flexibility than other glasses. A minority of rods have boron reinforcement in an E-glass/boron composite. After the composite material has cured, it is sanded and painted with methods very similar to those used for composite golf clubs.

There are a number of different designs for reel seats. They are often molded from plastic filled with graphite fiber. Another method is to machine the seats from aluminum using a number of operations, primarily turning (3A1). The seat is hollow for part of its length to accept the rod, and is usually threaded at the upper end. A tubular part, a clamp ring, fits over the rod and has a mating screw thread. The clamp ring often doubles as a second handle. When it is loosened by turning on the screw thread, it releases the reel; tightening it holds the reel in place. This method permits attachment and removal of the reel without the need for tools. If the reel seat is aluminum, it usually is anodized after being polished. In some designs, there is no reel seat, per se, and the reels are simply clamped to the plain

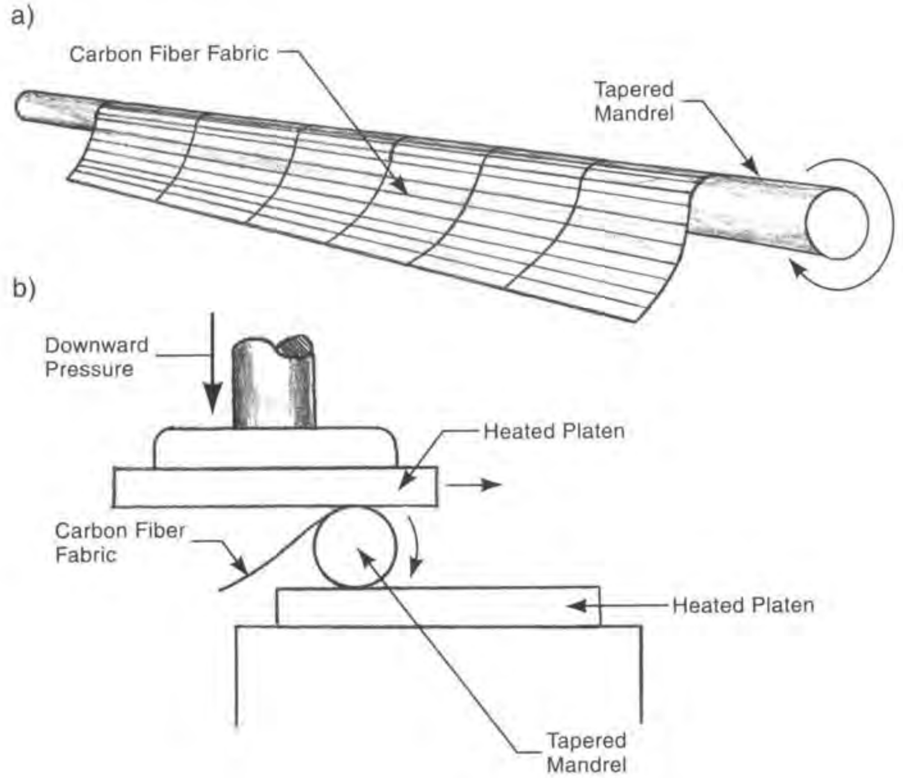

Fig. F1 The wrapping method of fabricating fishing poles and golf clubs from composite material. a) carbon or glass or combined carbon/glass fiber fabric, impregnated with epoxy, is wrapped around a tapered steel mandrel. b) The mandrel is further wrapped and is subjected to heat and pressure to polymerize the epoxy and create a solid workpiece. Removal of the mandrel and further operations result in a finished shaft.

rod or to the handle with a die-cast clamping part and screw fasteners.

Handles or "grips" are commonly molded from EVA plastic or hypalon synthetic rubber. (Hypalon is chlorosulfonated polyethylene, made by reacting polyethylene with sulfur and chlorine.) More traditional grips are made from wood or a series of cork rings, or are wound on the rod with cork tape or tape made from hypalon filled with granulated cork.

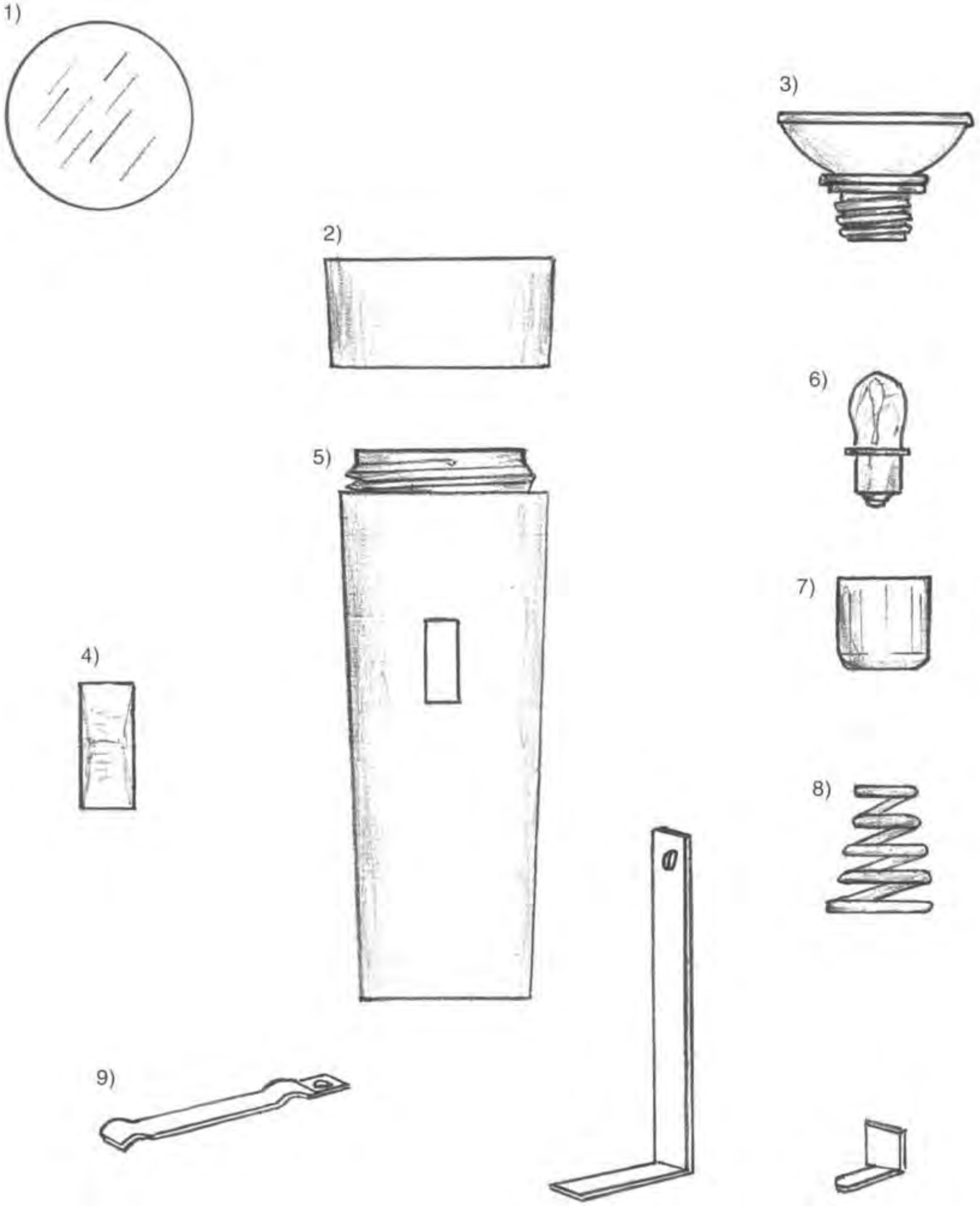

Fig. F2 The parts of a typical inexpensive flashlight: 1) lens, 2) top cap 3) subassembly of reflector, lamp connector and lamp base, 4) sliding switch, 5) body, 6) lamp, 7) lamp holder, 8) battery spring, 9) electrical connecting and contact strips.

The handle and reel seat are assembled at the large end of the blank rod. Both parts are held in place with epoxy adhesive. Some rods, especially the long ones, are made up of shorter pieces that fasten together, end-to-end, with the aid of metal ferrules - made on screw machines (3A2c) - that are bonded to the shorter pieces.

There is additional work on the rods to attach guides for the fishing line. The guides are fastened with epoxy and impregnated cord that is wrapped around the rod and over the wire parts of the guides. Wrapping to attach the guides may be completely manual or may be facilitated by rotating the rod in a lathe. After wrapping with the cord, additional epoxy is brushed over the cord. The epoxy is then heated to cause it to flow into a smooth surface. Guides for the line are made in one of a variety of materials and methods: from stainless steel wire formed by 4-slide operations (2G2); sometimes, from welded combinations of two formed parts; from carbon steel wire similarly formed and hard-chromium plated (8C1); or from molded eyelets of aluminum oxide or other ceramics (5B), held by the steel wire parts. A final clear coat on the rod covers and protects decorative effects and the model and brand identification.

flashlights - The simplest flashlights have the following parts: body, lens, reflector, lamp base, lamp (light bulb), top cap, lamp connector, lamp holder, sliding switch button, lamp contact spring, connecting strip from bottom to switch, connecting strip from switch to lamp, contact strip in the lamp holder, and a helical spring to maintain battery contact. Fig. F3 illustrates these parts.

Most flashlight bodies are injection molded (4C1) of a thermoplastic. Others are molded of thermoplastic elastomers (synthetic rubber compounds). Other parts made by injection molding are the top cap, reflector, switch button, and lamp holder. The lens is made from extruded transparent plastic material which is blanked (2C4) to a round shape. The electrical connectors and contacts are made from brass alloy strip stock, and are cut and formed as necessary on four-slide machines (2G2). Contacts and switch parts with spring properties are made from half-hard stock and may be of beryllium copper alloy. They may be zinc plated at contact points. The reflector is vacuum metallized (8F3) to provide reflectance. The light bulb is made with standard incandescent lamp methods. (See *light bulbs, incandescent.*) The battery spring is wound by conventional spring winding methods. (See *springs.*) The lamp holder and lamp connector are pressed together and then bonded to the reflector by ultrasonic bonding (4L4) or adhesive bonding (4L7) The two connector strips are connected at the switch button with an eyelet. Other parts are all assembled easily using molded screw threads to hold parts together. The sliding switch button is heat upset from inside the body to hold it in place while allowing it to slide.

flatware (tableware)(silverware) - The usual metals used for making knives, forks and spoons are stainless steel, sterling silver, or brass alloys, electroplated with silver. A commonly-used grade of stainless steel contains 8% nickel and 18% chromium. Sterling silver contains 92.5% silver and 7.5% copper alloy. Table knives in a sterling silver set usually have stainless steel blades and silver handles.

The operations for many pieces begin with a heavy sheet of the base material used. The sheets are blanked (2C4) into pieces that approximate the eventual outline of the item. These pieces are rolled (2B1) a number of times to reduce the thickness to near that of the final product. Thickness is usually different in different areas, e.g., the handle area is often heavier than in the working area, so the rolling is selective. Several passes of rolling may be needed and annealing is usually required between operations because of work hardening of the material. The annealing process used and the amount of annealing depends on the alloy involved, but it involves heating the workpiece to a high temperature and either cooling it gradually or quenching it back to near room temperature.

After rolling, the workpieces are blanked again, this time to the final outline of the knife, fork or spoon, except for forks, the tines of which are connected and held in place by a thin web. Coining (2D6) is carried out for spoons where the handle pattern and identifying data on the underside are formed. In making forks, the tines are first formed in another coining operation but a thin connecting piece is still left at the end of the tines until after the handle is coined. After the coining of the handle, the piece connecting the tines is trimmed off in another press operation. For knives, the handles are made from two halves of thinner stock that are blanked, formed (2D2) and embossed (2D7), or coined with the pattern. Then the two halves are brazed (7B) together to provide a hollow handle. The handle is

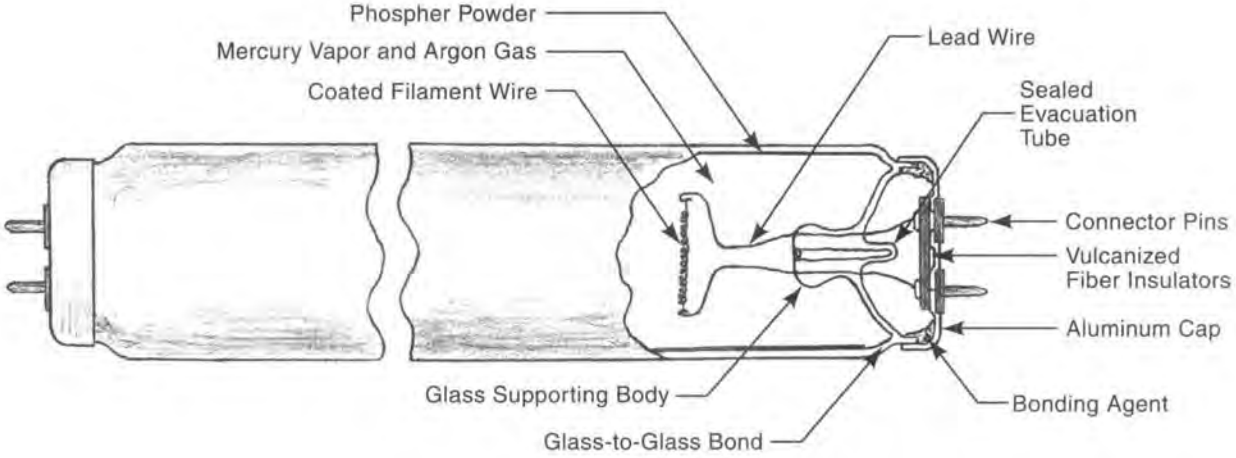

Fig. F3 A typical fluorescent light tube.

polished (8B1) and buffed (8B1a) to remove evidence of the brazed joint and to achieve the finish wanted. The knife blade, usually made from stainless steel, is also blanked, coined, trimmed, and sharpened, and is assembled to the handle and fastened with a strong adhesive. (If the spoons and forks have hollow handles, the operations performed are essentially the same as those for knives.)

Forming the bowl shape is the next operation for spoons and requires several cold forming press operations and a trimming operation for the flash that results. All pieces are then polished to remove burrs and buffed to the surface finish required. Pieces to be silver plated are then cleaned (8A) and electroplated (8C1). Final inspection is the last step before packing, for all pieces.

flexible printed circuit boards - See 13A4.

flocked fabrics - See 10F31.

floor covering, vinyl - See *vinyl flooring.*

flour - The most common flour is finely ground wheat meal. See "milling grain" (12C5 and 12C5a).

flour, bleached - See entry 12C5a2.

flour, enriched - See entry 12C5a3.

fluorescent lights - convert ultraviolet radiation between two electrodes in a long tube to visible light. They include the following components: a glass tube with internal surfaces coated with phosphor powder, an electrode assembly with sealed end caps at each end of the tube and mercury vapor and argon gas that occupy the open space in the tube. Fig. F3 illustrates the construction of a typical fluorescent light. The electrode assemblies at the ends of the tube consist of a filament wire, two lead wires to support and connect the filament, a glass supporting body with the lead wires molded in, two brass connector pins made from fine brass tubing, three parts made of vulcanized fiber or phenolic plastic that hold and insulate the two connector pins, an anodized aluminum cap, and a sealant-bonding-supporting agent.

The glass tube is made with the methods described in section 5A2c. Identifying information is printed or etched on the tube. The connector pins are made from brass seamless tubing drawn to a small diameter. The electrode assemblies at each end of the tube are assembled to the tube in two stages, each with a separate subassembly. The filament subassembly consists of a molded glass supporting body incorporating the two copper lead wires and the filament wire. The filament wire is coated with an alkaline-earth oxide. It is held in place on the lead wires by crimping. The other subassembly for each electrode consists of an aluminum sheet metal end cap, the two brass connector pins and three pieces of vulcanized fiber that hold and insulate the pins. The aluminum cap is blanked, formed and punched to provide room for the vulcanized fiber parts and pins. The fiber parts are blanked and pierced from sheet material. The pins are assembled to the holders and fastened by upsetting the open ends, as with tubular rivets.

Each glass filament assembly is fastened to the fluorescent tube by heating and softening the glass supporting body and the tube ends, and pressing the two parts together. Before filament assemblies are attached at both ends, phosphor powder is introduced to the tube. The phosphor powder is usually zinc silicate or magnesium tungstate. Before both ends are sealed, air is evacuated from the tube and replaced with a mixture of mercury vapor and argon. The cap and pin subassemblies are put in place with the connecting wires inserted in the open ends of the connector pins. The tubular pins are crimped at the ends to round the ends and to hold the connecting wires in place. A bonding and supporting adhesive is incorporated in the assembly and the aluminum cups are swaged against the glass tubes to insure a tight fit.

This final assembly takes place on special rotary indexing table equipment in which the glass tubes are held in a vertical position as the table rotates. At each station, some element of the assembly takes place. At one station, the powdered phosphor is discharged into the top of each tube where it coats the inner surface as it falls to the bottom. At other stations, the gas is injected and the top and bottom end filaments are installed, the tube is sealed and caps are assembled and bonded to the tubes. At the last position, the tube is tested.

When the fluorescent tube is used in lighting applications, the other components involved are a socket for each end of the tube, wiring to an electrical plug or to connection points in the building, a light fixture incorporating reflectors and a holder for the fluorescent tube, sockets for the tube end connection plugs, starter, ballast transformer and an on-off switch.

flux-cored wire solder - See 13C1g1.

foam plastics - See 4C3.

food wrap, ("saran wrap") - See *saran.*

footballs - are made from cowhide as the external material with vinyl sheet, cotton fabric, polyurethane rubber, lacing, and stitching yarn. (See *leather* and *leather goods*) The tanned cowhide is split/shaved to less thickness; the outer surface is given a pebble texture, and some are decorated with the manufacturer's logo, team identification and other information. The leather is cut into elliptical pieces with steel-rule or similar dies. Four such pieces are sewn together, along with a vinyl and cotton lining. This work is done with the ball inside-out. The ball is then turned right-side-out and a polyurethane bladder is inserted into position through a small opening. (The bladder is made by heat sealing four elliptical sheets and a valve together. The ball is then pre-inflated to stretch the leather and straighten the seams. Adjustments in shape or seam straightness are made along with any needed repairs. The ball is partly deflated and the opening is laced by hand.

footwear - See *shoes.*

Formica®, Micarta® (rigid plastic laminates) - See 6F8 and Fig. 6F8.

fragrances (perfumes) - Fragrances for perfumes, cosmetics, soaps and other products are obtained from natural sources (flowers, fruits, plants and animals) by methods of extraction (11C3), distillation (usually with steam) (11C1e) and expression (11C4). However, synthetic and semisynthetic fragrances are increasingly being used. Synthetics are now the major ingredients for perfumes, and are produced by various chemical processes from natural materials and from coal tar hydrocarbons, alcohols and other organic chemicals. Some of the synthetics are chemically identical to ingredients from natural sources. Others mimic a natural fragrance or provide an entirely new odor. Most perfumes are a blend of a number of different fragrances. As many as 100 different ingredients may be used in the finest perfumes. Some of the ingredients in perfumes are not fragrances, but are fixatives that enhance or give longer life to other odors or are agents to aid in blending of other materials. Some fixatives and fragrances have unpleasant odors when extracted from their source but, when extremely diluted, provide pleasant effects. Often several ingredients, both natural and synthetic, when blended together, imitate a natural fragrance.

Some important natural ingredients from plants are citrus oils (from skins), lavender (from the flower lavandula vera), attar of rose (from the flower of the attar or damask rose), gardenia, oak moss , cinnamon (from bark), anise (from seeds), mint (from leaves and stems), thyme and sage (from leaves), citronella (from the leaves of lemon grass), orris (from roots of the Florentine iris), vetiver (from the roots of a tropical grass), and geranium oil (from the flowers or leaves of the plant). Animal-sourced fragrances, all fixatives, are musk (a secretion from the musk deer), ambergris (from the spermaceti whale), civet (found under the tail of the African civet cat), and castor (from beavers). Some notable synthetic fragrances are indole, C_8H_7N, made from phenylthydrazine and pyruvic acid, but first found in some flower oils, muscone (synthesized musk), acetophenone ($C_6H_5COOH_3$) from benzene and acetyl chloride, and hydroquinone dimethyl ether ($C_8H_{10}O_2$).

Perfumes are alcohol solutions of the fragrant oils and solids. They typically contain 10 to 25% of the concentrated ingredients. Cologne (eau de cologne or toilet water) usually contains 2 to 6% of the concentrate. Fragrances are used in lotions, face powder and other cosmetics, deodorants, hair dressings, shaving creams, toothpastes and medicines. Industrial uses include paints, artificial leathers (to give a leather odor), cleaning materials, and some product packaging.

freeze dried food - See 12H5.

frozen food - See 12I1, 12I1a, 12I1b, 12I1c and 12I2.

fuel, diesel - is a product of the fractional distillation of crude oil (11H1a). It is a heavier hydrocarbon than gasoline which is also a product of the same fractional distillation equipment. Distillates having boiling points from 350 to 650°F (177 to 343°C) provide diesel fuel[1]. Different fractions within that range are used for different types of diesel engines. The smaller, higher speed engines with frequent changes of speed and load as used in vehicles, utilize the lighter, more volatile distillate with the lower boiling point. Larger engines with more uniform speeds, e.g., electricity generation, use the heavier grades.

fuel, jet - is another product of the fractional distillation of crude petroleum. It is a lighter hydrocarbon than the diesel fuel described above but is heavier than gasoline. See 11H1a.

furniture, upholstered - See 6H.

furniture, wooden - See Chapter 6.

G

garlic - See *spices.*

garments (clothing) - As described in detail in chapter 10, sections H, H1, H2, H3, H4, H5 and H6, garment making has the following major sequence of operations: 1) Fabric for the garment is spread on a long table in a high stack. 2) The top layer of the stack is marked with chalk or with an attached paper layer, to outline the parts to be cut from the fabric, including garment panels of various sizes and other parts such as pockets. 3) The stack is cut along the marks to provide stacks of garment panels and parts. Bundles of mating parts are prepared for sewing. 4) Parts are sewn together. In mass production, each operator (or automatic machine) performs only one or a few operations and the bundle of sewn parts is conveyed or taken to the next operation where another panel or part is added by sewing. This sequence of operations continues until all sewing is completed. 5) The finished garment is pressed. 6) The garment is inspected, folded, labeled, and wrapped for shipment.

gaskets, packings and seals - are made from sheet materials, cordage and molded parts. A number of softer metals may be used including lead, tin, zinc, copper, aluminum, and low-carbon steel. Nonmetals used include rubber, both natural and synthetic, paper and other fiber sheets - especially vulcanized fibre - cork, asbestos, various plastics, carbon or graphite fibers, glass and aramid (e.g., Kevlar) fibers. Composite materials are common. Metal and nonmetal materials may be combined in a gasket or seal. Plastics may be combined with fibers to hold the gasket together and provide a filler and seal between fibers. Various manufacturing methods are used depending on the material involved and the shape of the seal or gasket. Fibers may be coated with other materials for corrosion protection or better sealing. Fiber materials are sometimes twisted and braided into a rope-like material. Thermoplastics and some rubbers are injection molded. Thermosetting plastics are usually processed by compression or transfer molding. Many composite materials are blended and calendared to form a sheet and are then blanked with steel rule or conventional blanking dies to the shape needed. Profile extrusions of rubber or plastics are used for some long, narrow seals.

gas, manufactured - There are a number of processes for making fuel gas from coal, some of them dating to the 17th and 18th centuries, when gas was used for illumination. One closely-related current process makes *producer gas* by partially burning coal in a closed furnace having an atmosphere of air and steam. The resulting gaseous product contains carbon monoxide, hydrogen and nitrogen. Although the heating value of this gas is lower than that of natural gas, it does have some industrial applications in heating and as an intermediate material when some chemicals are manufactured.

Coal gas is made from the destructive distillation (11C1g) of coal. The full process may also include some methanation and gas cleaning operations. The resulting gaseous product primarily contains hydrogen, methane and carbon monoxide. In some operations, steam is injected into the furnace to react with the hot coke, increasing the yield of combustible gas. Coke and coal tar are by-products of the operation. Most processes involve passing steam and air through a bed of hot coal or coke.

gas, liquified petroleum (LPG) - usually has propane or butane as its major constituent with some pentane, though the composition varies depending on the source and the intended use and use location, since propane is more suitable for northern climates and butane for the southern. LPG is a product of the refining of petroleum and is compressed to a liquid and stored in metal vessels for ease of storage, transportation and handling. A primary use is for cooking and heating in areas where pipelined natural gas is not available, but it is also used as a vehicle fuel and a source of heat for grain drying and tobacco curing.[4]

gasoline - is a product of petroleum refining (11H). Gasoline is one of the lighter products of fractional distillation (11H1a) of crude oil. Additional gasoline is extracted from crude oil by cracking (11H2a) heavier oil products of the fractional distillation.

gears - are many different kinds of gears with different requirements that necessitate different manufacturing methods. Fig. G1 illustrates various kinds of gears. Fig. 14C shows a manufacturing cell layout for gear machining.

gear milling - is one common method for machining gears. A milling cutter, with the teeth ground to the shape of the desired gear teeth and their spacing, is fed across the gear blank. Gear teeth are machined one at a time. The gear blank is stationary during the cutting but is indexed between cuts. See 3D and 3D5. All kinds of gears except spiral bevel gears are feasible with this process, but internal gears are only sometimes feasible. Fig. G2 illustrates milling of a simple spur gear.

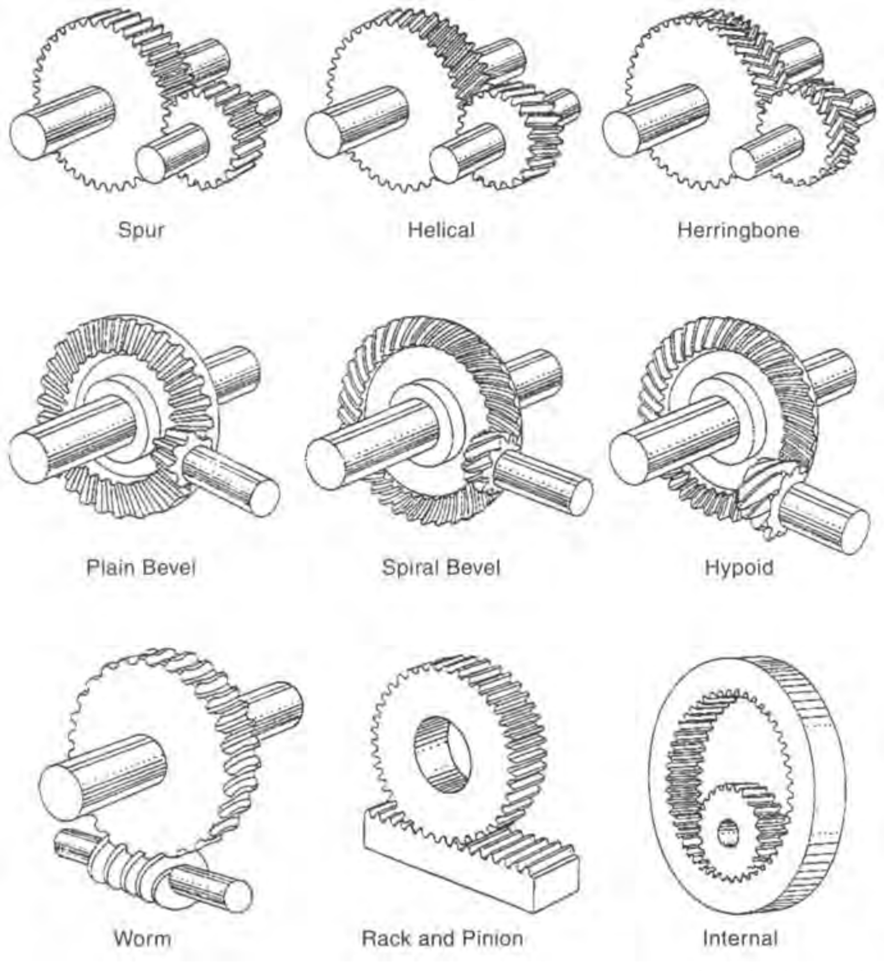

Fig. G1 Various kinds of gears. (*From Maintenance Engineering Handbook, 3rd ed., L. Higgins and L. Morrow, McGraw-Hill, New York, 1985, used with permission.*)

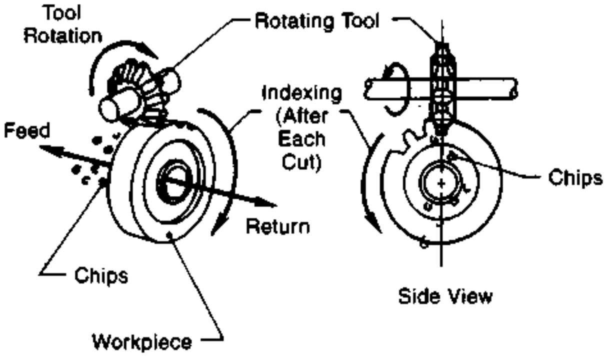

Fig. G2 Gear milling a simple spur gear. The form milling cutter machines one gear tooth at a time as it feeds across the gear blank. (*From Todd, Allen and Alting, Manufacturing Processes Reference Guide, Industrial Press, 1994.*)

gear hobbing - is a specialized gear machining process. The hob is a rotating cutter which resembles a worm gear with material removed to provide cutting edges. It is mounted on a spindle that is geared to another spindle which holds the gear blank at approximately a right angle to the hob. (The right angle is modified to the extent of the helix angle of the hob.) As the two spindles rotate, the cutting teeth advance into the gear blank, cutting the gear teeth. The shape of the gear tooth is gradually generated as the cutting of each tooth proceeds. The gear blank does not have to be indexed between teeth because of the worm-gear shape of the hob. The process is rapid and produces high quality gears. It is applicable to spur, helical, and worm gears. Bevel and internal gears are not feasible with this method. Fig. G3 illustrates the process schematically.

gear shaping - A special shaping machine, similar in principle to those described in sections 3P and 3R, has the cutting tool and the gear blank geared together. As the cutter, which resembles a gear, moves back and forth, both the cutter and the blank rotate. Material is removed on each forward stroke of the cutter and as the operation progresses, the desired tooth shape is generated in each gear tooth machined in the workpiece. The process can be used to machine both external and internal spur and helical gears, although, with helical gears, an additional guide to produce the helical motion of the cutter is required on the machine. The process is not suitable for bevel gear machining. Fig. G4 illustrates the process.

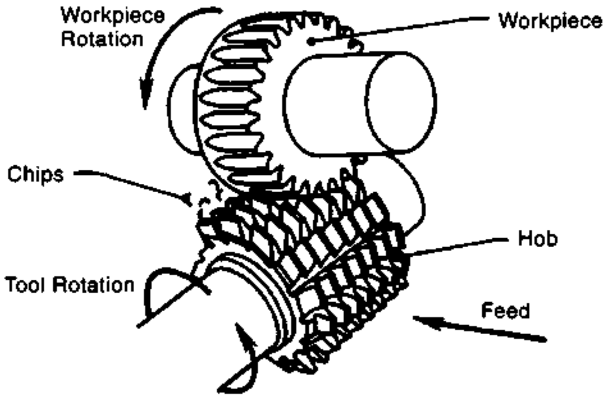

Fig. G3 Machining a spur gear by gear hobbing. The rotation of the hob (cutting tool) and the gear blank (workpiece) is synchronized and continuous. (*From Todd, Allen and Alting, Manufacturing Processes Reference Guide, Industrial Press, 1994.*)

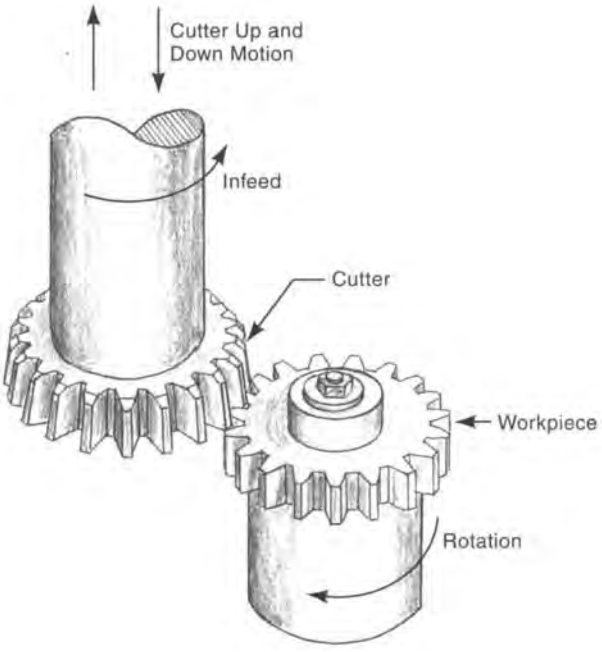

Fig. G4 Schematic view of the cutter action in gear shaping. The cutter moves up and down as both the cutter and workpiece rotate, feeding the cutter into the gear blank. The illustration shows a spur gear but the method is applicable for helical gear shaping when the cutter moves at an angle to the axis of the gear.

gear broaching - (See section 3F.) Gears can be completely machined in one pass with this method. It is more commonly used for internal gears than external gears because tooling for the latter is quite bulky and expensive. The broaching tool contains formed cutting teeth that produce complete gear tooth forms in the workpiece. Helical as well as spur gears can be machined with this method. With helical gears, there is rotational motion between the broach and the workpiece during the cut to provide the helical shape.

shear cutting of gears - This process is quite similar to both shaping and broaching. All the spaces between teeth of the gear are cut at one time with individual cutters mounted in a circular tool holder. There are multiple passes of the cutting tools. The tool motion is reciprocating. Each time the tool crosses the workpiece in the cutting direction, each of the cutting tools is advanced into the work. The toolholder incorporates a double cone system to advance the cutters. After the final pass, all gear teeth are fully formed. Tooling is expensive so the process is applicable chiefly to high-production situations but is fairly rapid. Both internal and external spur gears can be produced with this method, but the system is used more for external gears. Helical gears are not feasible.

straight bevel gear planing - is a method that is applicable to straight bevel gears but not helical bevel gears. It is essentially an application of shaping as described in section 3Q, and has similarity to gear shaping described above. However, except for indexing between gear teeth, the gear blank is held stationary during the process. The cutting tool, ground on the sides to the profile of a single gear tooth space, moves forward for a cutting stroke, then retracts and repeats the reciprocating motion. Because of the bevel gear shape, the path of the cutter is radial toward the center of rotation of the bevel gear, producing the taper that the bevel gear requires. The process is most applicable to larger, coarse pitch bevel gears.

two-tool planer method - is similar to straight bevel gear planing except that there are two cutting tools, one for each side of the gear tooth. The tools are given a rolling motion during the cutting stroke, to generate the proper tooth profile. Unlike straight bevel gear planing, the method is applicable to both fine and coarse-pitch bevel gears. With fine-pitch gears, both roughing and finishing cutters are mounted on the tool holder. With coarse-pitch gears, the common practice is to use two operations, rough machining and finish machining of the gear.

dual rotating-cutter method - This method is a faster production method than the two-tool planer method for straight bevel gears. Two rotating form milling cutters, which have interlocking cutters, machine both sides of the gear teeth simultaneously. They follow an angled path to provide the proper tooth taper and have a rolling motion to generate the tooth profile. The cutters roll back after each tooth is cut, and the gear blank indexes for cutting the next tooth.

revacycle process - is a broaching process that appears, at first glance, to be a milling process. It is rapid for the production of straight bevel gears. The cutter is a large circular broach, similar in appearance to a milling cutter but each successive tooth is slightly larger than the one that precedes it. The cutter revolves only once as it passes across the gear blank, starting at the inside edge. The successively larger teeth put a taper in the teeth and the space between them. Each pass of the cutter machines one gear tooth space. After each cut, the gear blank indexes to present the next gear tooth position to the cutter.

spiral gear planing generator cutting - is illustrated in Fig. G5. The process is a variation of straight bevel-gear planing. The single tooth cutter, which has a reciprocating motion, tracers a helical

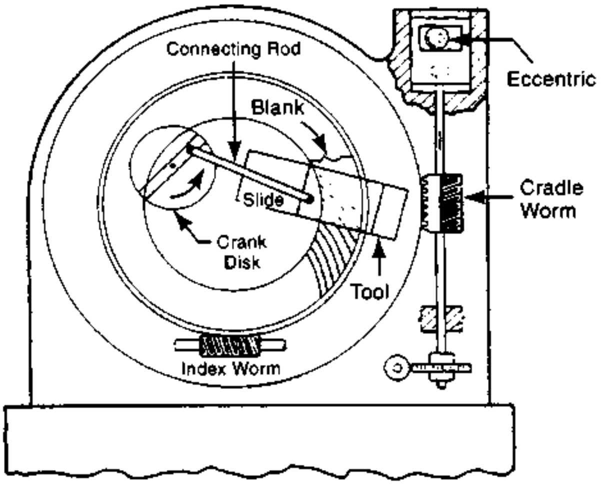

Fig. G5 Spiral gear-planing generator cutting *(from D.W. Dudley, Gear Handbook, McGraw-Hill, New York.)*

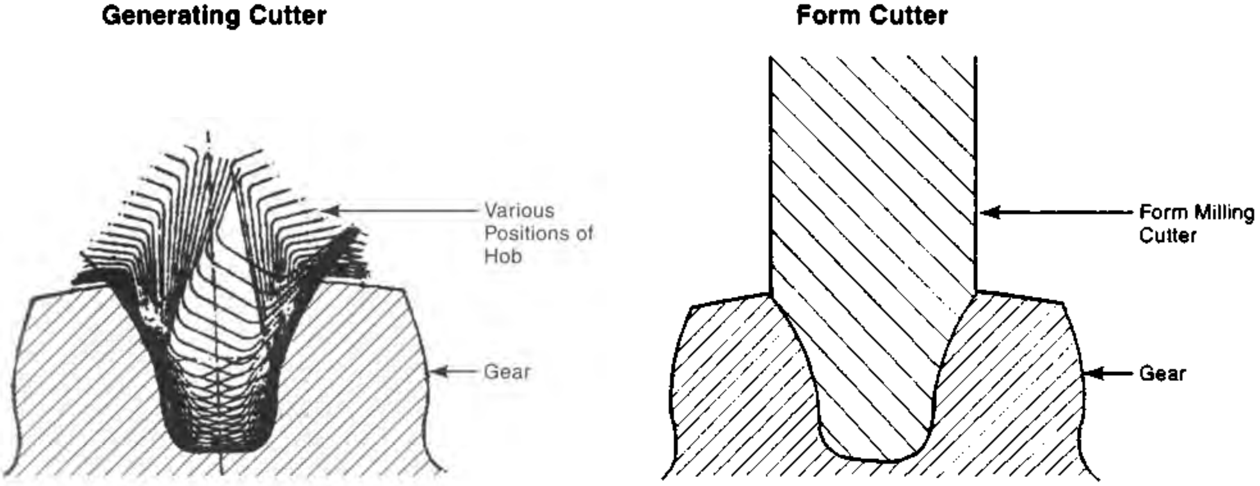
Generating Cutter

Form Cutter

Fig. G6 The action of a generating-gear-tooth cutter as contrasted with a form cutter. *(The drawing of the generating cutter is based in part on an illustration from D. W. Dudley, Gear Handbook, McGraw-Hill, New York, 1962.)*

path on the gear blank during the forward stroke. The path is helical because the gear blank is rotated at a controlled rate during the cutting stroke. The gear blank's rotation is continuous so that the cutter removes material from successive gear tooth spaces with each stroke. The gear tooth shape is generated with each successive pass in each tooth space. One side of each gear tooth is machined, and the equipment is then reset for cutting the other side of the next tooth. The process is used for spiral bevel, hypoid and zerol gears.

face mill cutting - utilizes face-milling cutters somewhat similar to those pictured in Figs. 3D1 and 3D (view j) except that, instead of having cutters to mill a flat surface, the cutter teeth are form cutters in the shape or near-shape of the space between the gear teeth. They cut circular paths across the face of a gear blank to create bevel, hypoid, or zerol bevel gears. Two different arrangements are used. In one arrangement, the shape of the cutting tooth is exactly the shape of the space between the gear teeth. In the other arrangement there is a rolling motion between the face mill and the workpiece during cutting so that successive cutters generate the gear tooth shape. Two passes may be needed on each tooth, one for each side of each tooth.

worm gear methods - Worm gears are made by one of three methods: 1) single point turning on a lathe, similar to thread turning. 2), hobbing (See above) and 3), thread milling (3E5), all of which can produce the helical shape. With all three methods, the shape of the machined teeth are the form of gear teeth with helicoidal sides, whereas turning and milling of regular screw threads produces straight angled sides.

gear shaving - is a gear finishing method, used to remove fine surface irregularities that can occur with gear machining processes. The process utilizes an accurate gear-shaped cutter that can mesh with the gear to be machined. The cutter gear has slots or gashes across the width of each gear tooth to provide a number of cutting edges. The gear and cutter are run together, but the cutter is slightly helical and the axes of the two are set at an angle of about 15 degrees. This arrangement produces a sliding action where the cutter and the gear teeth mesh, so that the sharp edges of the cutter remove minute amounts of metal, providing superior accuracy and finish on the gear teeth. The process can be used for both straight spur and helical gears and is illustrated in Fig. G7.

gear grinding - is normally used to refine the dimensions, tooth profile, and surface finish of gears that have been heat treated and may have undergone some heat-treatment distortion. However, grinding is also sometimes used to machine fine pitch gears from solid stock. See 3C3a. Various methods are used, but they all resemble milling, with a grinding wheel replacing the milling cutter. In some set ups, the grinding wheel is dressed to the desired

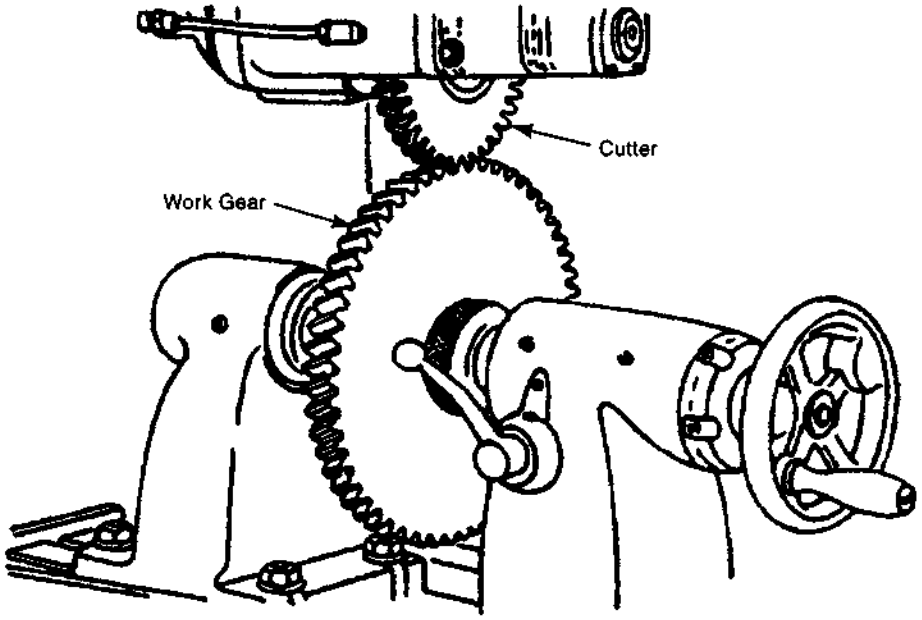

Fig. G7 In the gear shaving operation, a gear-shaped cutter and the gear workpiece are run together. The cutter is shaped so that there is some sliding action as the two rotate. The action shaves a very small amount of metal from the gear surface, producing a higher quality involute gear tooth form. *(Reprinted with permission of the Society of Manufacturing Engineers, Tool and Manufacturing Engineering Handbook, 4th ed., Vol. 1 Machining, copyright 1983.)*

tooth profile; in others, the wheel generates the tooth profile through multiple passes. Grinding is suitable for almost all gear sizes and shapes, the exceptions being very large gears, where suitably-sized grinding equipment is not available, and small internal gears that are too small to permit the insertion of a grinding spindle.

gear honing - is another gear finish-machining method. It is similar to gear shaving in that there is a tool in the shape of a gear that engages the workpiece gear. However, the tool is made of plastic and is impregnated with an abrasive. The tool teeth are helical, so that when they engage and drive the workpiece gear, there is some transverse sliding action against each tooth. Driving takes place for a period of time in both directions. During the sliding action, the abrasive particles work against any minor irregularities in the gear surface, honing the surfaces to be more smooth and more accurate. Gear honing is used after heat treatment and can take the place of grinding if the heat treatment distortion is minimal.

gear lapping - is another abrasive process for finishing gears. Like honing and shaving, it uses a gear-shaped tool. Abrasive compound is placed between the workpiece gear and the tool and, when the two are run together, minor imperfections at the surface are reduced by the abrasive. Sometimes, a mating gear is used instead of a specially-made, gear-shaped tool. If the mating gear or gear-shaped tool are not helical, some sideways reciprocating motion may be introduced to provide better abrasive action across the width of each gear tooth.

gear burnishing - also uses a mating gear-shaped tool to run with the workpiece gear. The gear-shaped tool is hardened, ground, and polished, to accurate dimensions and tooth form, and a smooth surface finish. The pressure applied by the burnishing tool forces down any raised surface imperfections and improves the surface finish. Sometimes two or three burnishing gears are run simultaneously on opposing sides of the workpiece gear.

gear casting - sand mold casting (1B), plaster mold casting (1C5), permanent mold casting (1D1), investment casting (1G), and die casting (1F) methods are all used for the production of gears, given a pattern or mold of the proper shape.

All these processes have some limitations for gear making, due primarily to insufficient accuracy, strength, or hardness of castable materials, and limitations of castable shapes. Sand casting is now more widely used for making gear blanks for later machining than for as-cast gears because of the roughness and inaccuracy of the as-cast tooth surfaces. Plaster and permanent-mold casting can be used for lightly loaded, slower moving spur gears, and for other applications where tooth accuracy is not critical. Investment casting can also be used for helical and bevel gears but the process is limited to smaller-size gears. Die cast gears are widely used in commercial products where strength and tolerances less stringent than those achievable with machined steel gears, are sufficient. Die cast gears normally require trimming operations to remove mold flash.

gear forming methods - Almost all metal forming processes can be used to form gears of one type or another.

extrusion - (2A3) is useful for pinions and other small straight spur gears, especially those of coarse pitch. Normally a secondary drawing operation is required after extrusion to achieve the desired accuracy. The extrusion is cut to the desired length and center holes are drilled and bored. Lathes or screw machines, equipped with the necessary collets, are used.

cold drawing - (2B2) may follow extrusion to refine the surface and accuracy of the tooth form or may be used to form gear teeth in round stock. As with extrusion, the round bar with formed gear teeth is cut off to the width of each gear and center holes are drilled and bored.

forging - (2A4) is a common process for making gear blanks but, under some conditions, may be used to make gears without subsequent machining. To do so involves machining the blank before forging, and processing the blank through both rough and finish stages of forging. This method is chiefly applicable to straight bevel gears and face gears. Accuracy is less than that found in machined gears.

stamping (blanking) - Gears can be made by the stamping process (2C4). Material is blanked to the silhouette of the gear. The limitation is that sheet materials must be used, limiting the face width of the gears. However, when the blanked sheets are stacked and fastened together by riveting, press-fitting or welding, a sufficiently wide gear can be made. Fine pitch gears cannot be blanked from thick materials. Another problem with stamped gears is the "drawdown" and "breakaway" that occur with normal stamping processes, resulting in a portion of the edge being rough and not of the optimum dimensions. A secondary shaving operation can alleviate this or fine blanking (See below.) can be used. The use of stamping is limited to production of straight spur gears.

fine blanking - (2C9) The normal fine blanking process can produce good quality gears from sheet metal, usually by stacking and fastening several fine-blanked pieces together. The process avoids the drawdown and breakaway disadvantages of regular blanking and can produce gears of somewhat finer pitch than those producible by conventional blanking.

powder metallurgy - Normal powder metallurgy methods (2L1) can be used to produce gears of high accuracy. Spur, helical, bevel, and face gears can be made. Gear size is limited by the press force required and the size of presses available.

plastic gear molding - Injection molding (4C) is frequently used to make gears of injection-moldable plastics. Glass or other reinforcements may be incorporated in the plastic before molding to provide increased strength. The method is identical to that used to mold other parts, requiring only a mold with the necessary dimensional precision. The method is rapid and inexpensive, once a mold is available. Similarly, compression molding (4B1) and transfer molding (4B2), though less common, can be utilized with standard techniques.

gelatin[4] - is an animal product. There are two types, type A, made from skins, and type B, made from bones. Type A is produced by causing skins (after washing) to swell by soaking them in a solution of hydrochloric, hydrophoric or sulfuric acid for 10 to 30 hours and then extracting the gelatin in a series of hot water soakings. Four or five stages of soaking are used at progressively-hotter temperatures. Each stage extracts additional gelatin from the skins. The extraction liquid is filtered, degreased, deionized, and concentrated with the aid of a vacuum. The rich liquid is then chilled and dried on screens. The solid gelatin thus produced is ground and blended with material from other batches. Most type A gelatin is used for food. Other uses are pharmaceutical capsules, the production of photographic film, and as an emulsifier. Type B gelatin is made with an alkali process over a period of several months or by a method where the bone is dissolved in hydrochloric acid. The resulting material is washed to remove the acid and the residue is ossein which is about 65% gelatin[2].

gemstones - See *jewelry.*

gin - See *distilled spirits.*

ginger - See *spices.*

girders, steel - are normally hot rolled (2A1) to shape by passing a heated billet, bloom or ingot between pairs of heated rollers. Repeated passes are made until the desired cross-section (usually an I-beam) is achieved. Pickling (immersion in warm, dilute sulfuric acid) to remove scale, and oiling usually follow the hot rolling.

glass - See 5A.

glass bottles - are made by glass blowing (5A2b).

glass, bulletproof (bullet resistant) - is a special form of safety glass (See *safety glass.*) made by laminating layers of glass with layers of clear, flexible polyvinyl butyl plastic. Alternating layers are used with at least four panes and, the more layers, the better the bullet resistance. Total thickness may be 3 inches or more[27]. Thinner panes, with a thickness of one inch or more, and with at least four laminated panes, are not bulletproof but provide resistance to handgun fire. Another approach is to use polycarbonate as the internal plastic layer or layers.

glass, cellular (foam glass) - See 5A7c.

glass ceramics - See5A7a.

glass containers - See 5A2b1 and 5A2b3.

glass, cut - See 5A5b.

glasses, drinking - See *drinking glasses.*

glasses, eye - See *eyeglasses.*

glass, etched - See 5A5f.

glass, pyrex - See *cooking utensils.*

glass fibers - are made by several different methods, depending on the use intended for the fibers. See 5A6, 5A6a, 5A6b, 5A6c and 5A6d. For optical fibers for general light transmission, see 5A6e, for data transmission, see 5A6f.

glass filters - See 5A8c.

glass, foam (cellular glass) - See 5A7c.

glass jars - are made, in production quantities, by machine blowing (5A2b3).

glass lenses - See *lenses.*

glass microspheres - See 5A7d.

glass, photosensitive - See 5A7b.

glass pitchers - See 5A2b1.

glass, plate - See 5A3e.

glass, safety - See *safety glass.*

glass thermometers - see *thermometers, glass.*

glass tubing - See 5A2c.

glassware, laboratory (scientific) - See 5A2b1, 5A2b2.

glass vases - See 5A2b1.

glass, window - See flat glass processes, 5A3.

glass wool - See *glass fibers.*

glazing compound - See *putty.*

glove compartments, automotive - These are customarily made of plastics and can be extrusion blow molded (4F1), injection molded (4C) or made by one of the deep draw thermoforming methods (4D).

gloves - of a fabric or leather are sewn using the same methods as are employed with other garments and sewn products and described in Chapter 10, section H. (Fabric making for various products, including gloves is described in Chapter 10, sections A through G.) Protective gloves such as medical gloves, are made by dip molding latex or vinyl plastisol (4K2 and Fig. 4K2) or are made by heat sealing (10H4a) two plastic sheets together with a suitable die and then cutting the gloves free from the sheets with a suitable blanking die. Sometimes, fabric work gloves, after sewing, are given a protective vinyl coating as described in 4K2a.

glue - See *adhesives.*

glued-laminate lumber ("glulam") - See 6F7.

gold - Most gold is recovered by the cyanide process. The gold is found in the natural state (not as an oxide or as part of another chemical compound). However, the amount of gold per ton of gold-bearing ore is normally very small, and chemical means are used to recover it. The crushed ore is treated with an alkaline cyanide solution in the presence of air. The gold is converted to liquid sodium cyanoaurite. Sodium hydroxide is also formed from reaction of the sodium with oxygen in the atmosphere. The operation may be performed by spraying a dilute solution of the sodium cyanide on a heap of ore or, when the gold content is higher, the operation is performed in large agitated vats. The gold-bearing liquid is separated from ore solids by filtration. Gold is recovered from the solution by electrowinning (See 11K1c1.) or by reduction of the solution with zinc. Another recovery method is to process the ore with mercury, which captures the gold. With alluvial ores, simple panning may be used to separate particles of gold from accompanying sand and gravel.

golf balls - may have any of several different constructions. Most golf balls are of two parts; others have three components; a minority have four or more. The two-part balls provide longer shots, but less spin and control; the three-part balls travel less distance but can be given more spin and better control. Two-part balls consist of an inner spherical core, molded of a polybutadiene compound or of another elastomeric compound of high durometer. The core is tumbled (8B2) to remove mold flash. A cover of ionomer plastic is injection molded (4C1) over it. Retractable pins in the mold hold the core in a central position during molding. They retract after sufficient material is in the mold to hold the core in a central position but while there is still enough material flow to fill the holes left by the pins. The mold cavity surface is patterned to provide the dimpled surface for the balls.

Three-part balls use a smaller core, wrapped with layers of rubber thread that is stretched to 10 times its normal length as it is wrapped. The cover is then molded over the rubber wrap but, in this case, it is molded in two halves which are then heated, placed over the core, and pressed together to fuse. This approach is used to prevent distortion in the rubber band winding of the core.

Four-part balls may have a layer of other material between the rubber wrap and the cover. Some four-part balls have more than one such layer. Some balls - usually those of three or more parts - have covers of polyurethane or balata instead of ionomer. Balata is a thermosetting material of little or no elasticity, made from the sap of a South American tree. Covers of balata are compression molded (4B1a) in two halves. Polyurethane covers may use the thermosetting variety of polyurethane, cast (4H) over a layer of ionomer.

All balls are tumble polished to remove mold flash. Each is then placed on two holding pins that spin it while two or more coats of enamel are sprayed on (8D6). The paint is dried and the ball is hot stamped (4M2) with brand identification and variety information. Quality control and packaging follow. All operations are highly automatic.

golf clubs - are made by a variety of methods from a number of different materials, depending on the use of the clubs and the design developed by the manufacturer. Clubs called "woods", traditionally made with a wooden head, are now hollow and made of metal. "Irons" have solid metal heads. Stainless steel and titanium are the metals normally used for both types but irons are also made from carbon steel, beryllium copper, or beryllium nickel. Putter heads may also be made from bronze or aluminum. Tungsten is often used to provide additional weight in a desired location. Shafts may be of steel, stainless steel, aluminum, titanium, or now most often of a composite of epoxy resin and a reinforcing fiber, usually of carbon but sometimes of boron. 17-4 and 431 are two commonly-used stainless steels and Ti- 6Al - 4V is the most common titanium alloy but other alloys of both metals are also utilized.

Metal shafts are made from tubing which is tapered in 7 or 8 steps along the length by drawing (2B2) in successively smaller dies for short sections or by rotary swaging (2F1). Metal shafts are hardened (8G3c), tempered (8G2f), straightened (2K), and polished (8B1) after tapering and, if carbon steel, are chromium electroplated (8C1). Composite shafts are made by filament winding (4G7) with pre-impregnated fibers ("prepreg"), or by a roll-wrapping process that utilizes unidirectional sheets of pre-impregnated carbon fabric. Sometimes pultrusion (4G11), or pulforming (4G12), a variation of pultrusion, is used or, in other designs, a combination of wrapping and filament winding. Filament winding is carried out with fibers at a low angle to the axis of the shafts to provide the optimum reinforcement. When the wrapping method is used, the prepreg is wrapped around a mandrel and covered with a shrink wrap. After curing, the shrink wrap is removed. Fig. F1 illustrates the wrapping method. After the composite material is cured, the shaft is sanded on a centerless grinding 3c1b machine with wide-belt abrasives. The shafts are coated with a highly-filled urethane enamel using a dip (8D4) and circular squeegee method. Further sanding follows with a finer abrasive and, when the shaft is fully sanded, and of the desired smooth surface, it is dip painted with enamel and then a clear coat. Labeling by pad printing (8I7a), screen printing (8I7b), or transfer labeling takes place before the clear coat is applied.

Metal heads for irons are made with one of two processes, forging (2A4) or investment casting (1G). Metal heads for woods are normally investment cast but are sometimes made from forgings. Some woods, in order to reduce weight, have the top portion of the head injection molded (4C1) from graphite mixed with ABS plastic. Most metal head parts are surface hardened at high-wear areas after forming, typically by induction (8G3a2) or flame (8G3a1) hardening. Metal heads for woods are hollow and are often filled with foamed polyurethane plastic. Some woods and putters have separate striking surfaces for the ball. For putters, the striking surface may be molded from a semi-resilient grade of polyurethane. For woods and irons, inlaid striking surfaces may be titanium, stainless steel, zirconia ceramic, or a ceramic composite material with a titanium matrix.

Gripping handles for all clubs are usually injection molded of an elastomer or rubber, using the shaft as an insert in the mold (4C6), but some handles are leather that is wrapped on the shaft and adhesively bonded. Rubber or elastomer grips may use material filled with granulated cork for light weight. Leather grips are cowhide or calfskin. Appearance is important in selling the clubs, so finishing operations including polishing and buffing of metal parts, painting of the top portion of the wood heads and finish coating of the shaft with urethane or other varnish are additional steps carried out after the parts are made.

Shafts are assembled by insertion into a socket in the club head, and the two are commonly fastened with adhesive but, with metal shafts, the two may be drilled and pinned together.

graphite[4] - is obtained from both natural and manufactured sources. Manufactured graphite is made from petroleum or retort coke which is calcined to remove volatiles, screened, crushed and ground, and mixed with a coal tar binder. The mixture is cooled and run through an extruder or molding operation to make a workpiece of the desired shape. The workpiece is baked at about 1650°F (900°C) to convert the binder to carbon and put the carbon in amorphous form. Firing in an electric furnace at 4900°F (2700°C) converts the amorphous carbon to graphite. Workpieces are then machined as necessary to make finished graphite electrodes, chemical process equipment parts, rocket nozzles, nuclear energy components, electric motor brushes, and sealing rings. Natural graphite is used as a lubricant, for making pencil leads, and for making crucibles and refractories.

gravure printing plates - See 9D3b.

grease, lubricating - is produced in a variety of consistencies from mineral oil, which is made up of the heavier liquid fractions produced by the fractional distillation of petroleum (11H1a). The mineral oil is then thickened to a grease form by compounding it with soaps of calcium, lithium, aluminum, or sodium, and sometimes, non-soap thickeners. The soaps impart stiffness to the mixture. Other materials may be added in smaller quantities to improve temperature or water resistance, and to inhibit oxidation and corrosion. Grease is also made by rendering the inedible fat of hogs, cattle, or sheep. Greases are used as lubricants when the surfaces to be lubricated are not fully contained and the stiffness of the grease acts to keep it in place.

grinding wheels - are made by bonding abrasive grains together in the shape of a wheel. Various abrasives may be used. (See abrasives.) Bonding agents include ceramics, sodium silicate, shellac, rubber, plastic resins or oxychloride. The type of bonding agent used depends on the intended application of the wheel. Ceramic bonds are used for precision grinding applications. Softer, tougher, more resilient bonds are used for heavier cutting operations such as snagging of castings and for abrasive saw blades.

Ceramic-bonded wheels are made by mixing the abrasive and the ceramic material (clay or feldspar), pressing them together into the approximate wheel shape at high tonnage in steel molds and then firing the wheel at high temperature, e.g., 2300°F (1260°C). The wheel is then trued with steel cutters and ground to the exact shape and dimensions required. Wheels using resin, shellac or rubber bonds are baked at temperatures of 300 to 400°F (150 to 200°C). After size finishing, wheels are tested at high speed for balance and soundness. Honing and sharpening stones, and shaped tumbling abrasives, are made by the same basic methods.

guitars, acoustic - High quality guitars are still made with methods that rely heavily on manual operations. The first step is to produce the sides of the instruments, usually from strips of thin rosewood, cut to the proper width. The sides are softened in a steam chamber and bent to the curved shape in a bending press. Pieces for the top and bottom surfaces are cut to size and hour-glass shape by bandsaw, CNC laser cutter, router, or blanking die. (See 6B3 and 6B7b.) Tops are normally made from spruce or other softwood; backs are made from hardwood, especially rosewood, but often are blanked in two pieces that are glued together with a decorative center strip. Color and grain pattern are matched in the top, back, and side pieces. Straight grain patterns are preferred. Spruce braces are glued to the inside surfaces of both the top and back pieces. The pattern of the braces is important in the acoustic properties of the guitar. The top, back and sides are glued together in a fixture that maintains the proper alignment and applies pressure until the glue sets. The neck of the guitar has to be shaped from mahogany by manual or machine methods and is filed and sanded smooth. The neck is cut to allow attachment of an ebony finger board. The neck is also often bored through its length and a steel rod is inserted for reinforcement. Basswood strips join and reinforce the side pieces. The fingerboard, in turn, has pieces of pearl shell inlaid, and 20 nickel-silver frets glued into slots in the proper places. The neck is trimmed as necessary to fit the guitar body closely but they are not yet glued together. The body and the neck are then finished with many coats of lacquer, except for the fingerboard, which is oiled instead of lacquered. The neck and body are then glued together. When the glue has set, the lacquer finish is polished. The smaller parts, which support and contact the guitar strings, called the saddle, bridge, and nut, are attached. The "tuning machine", that is, the knobs and gears that tighten the strings are fitted to the end of the neck and the strings are then attached. The completed instrument is tested by an accomplished guitarist, not only for tone and pitch, but for smoothness of surfaces, level of frets, appearance, and all other characteristics. Any guitar that has defects is returned to the responsible production department for repair. Then, after a recheck, it is ready for packing and shipping.

gum, chewing - See *chewing gum.*

guns (firearms) - Gun manufacture involves the fabrication and assembly of a considerable number of precision parts, mostly made from steel. Historically, the complex-shaped metal parts have been hot forged to approximate shape and then finished with a series of machining operations involving milling, turning, broaching, drilling, boring, reaming, threading and various grinding operations. In current practice, many of the parts are made by methods that provide a finished part in its final shape and dimensions, with little or no post-forming machining. Investment casting (1G), powder metallurgy (2L1) and metal injection molding (2L3), are three

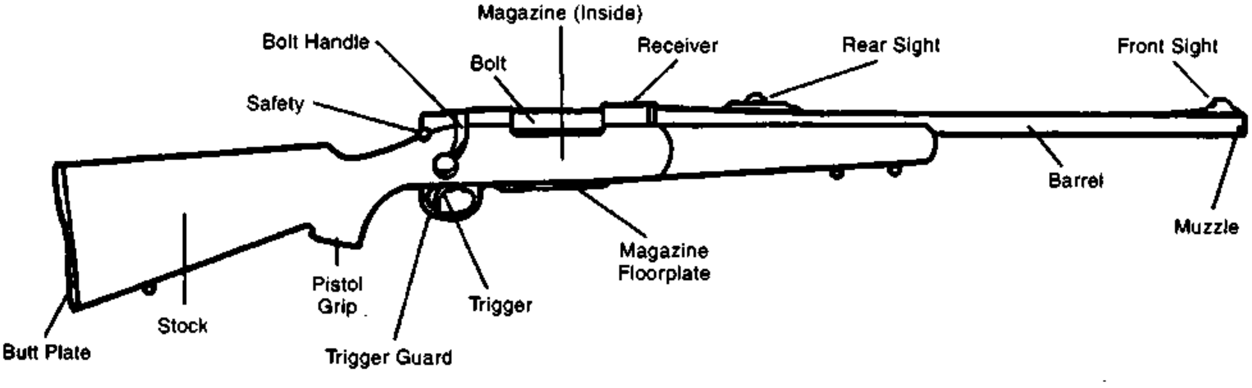

Fig. G8 The parts of a simple bolt-action rifle. *(Courtesy Remington Arms Company, Inc.)*

metal-forming processes used to provide near-net-shape gun components. Some parts are also made by stamping sheet metal. Except for those of stainless steel, all steel parts are normally given a black oxide surface treatment (8E4).

The major components for a typical basic bolt-action rifle are illustrated in Fig. G8. These parts include the barrel, receiver, trigger, and associated parts, trigger guard assembly, bolt assembly, firing pin assembly, front and rear sights, magazine, stock, and buttplate.

The barrel is made from alloy or stainless steel. Operations vary from manufacturer to manufacturer, and may include forging, normalizing, turning, gun drilling, reaming, and rifling (spiral grooves in the barrel to put a spin on bullets as they leave the gun). Gun drilling (3B6) is a critical operation because the hole must be straight and centered in the barrel over about 30 in (76 cm). Fig. G9 shows a common gun drilling machine for making the bore holes in two barrels simultaneously. Rifling of the bore of the barrel is produced by one of several methods: 1) A hook-type single cutter at the end of a long rod makes a series of passes in the bore of the gun barrel. The cutter is fed on a spiral path, and several passes are needed to cut one rifle groove to the proper depth. This is a shaper-like operation and is repeated for each of the 6 grooves that are typically cut. 2) A spiral broach is used to cut all 6 grooves in one pass. 3) Forming rather than cutting the rifling by forcing a carbide "button" through the bore. The button has a smooth non-cutting surface and displaces the metal of the bore to make the spiral grooves and raised spirals between the grooves. 4) Cold forging: The barrel is placed over a mandrel that contains a negative impression of the rifling - and then cold forged against the mandrel with a series of hammer blows in a machine that is a type of rotary swager (2F1).

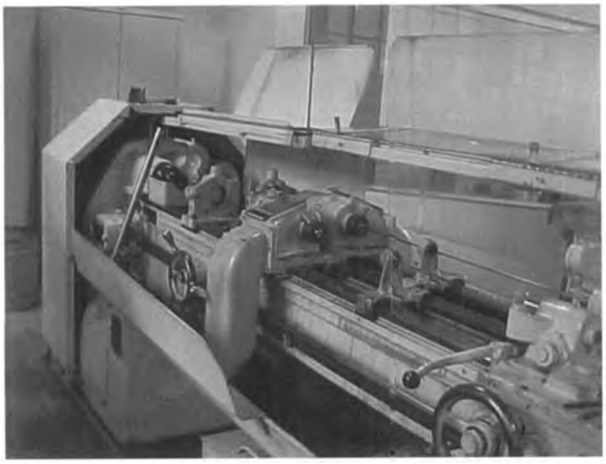

Fig. G9 A gun drilling machine for rifle barrels, drilling two at a time. Two pieces of steel bar for the barrels (like the one shown leaning on the machine) are placed in the chucks of the machine (in the background in the picture). The drills (shown in the foreground), starting at one end, advance and drill holes the full length of the barrels. The barrels rotate on their axes but the drills are stationary except for advancing into the work. The drill shanks are hollow and cutting oil fed through the drills removes metal chips as the drills advance. *(Courtesy Remington Arms Company, Inc.)*

The receiver of the rifle is machined from a solid block, or finish-machined from an investment casting with a series of CNC machining operations (3T & 3U2) or operations performed by dedicated machines arranged as a manufacturing cell. Broaching may be one operation. The machined part is heat treated (8G3) to a hardness in the Rc 40 range. Other parts are either machined from solid stock or made to near final shape by one of the processes mentioned above. Parts that are investment cast by some manufacturers include bolt handles, receivers, sears, hammers, and triggers.

The Remington model 700 bolt-action rifle includes the following powder metal parts: the floor plate latch, rear safety cam, front and rear spacers of the trigger assembly, safety button, and rear sight aperture. Metal-injection-molded parts include the front sight, rear sight base, rear sight slide, and trigger. The trigger guard is die cast of aluminum. The magazine box and spring are made on four-slide machines. Wooden stocks are made from knot-free walnut and are first machined with CNC milling machines that rotate the stock material and shape it with a milling cutter. Smoothing and finishing of stocks are essentially hand operations. Stocks are varnished after being shaped and surface smoothed. Checkering, if used on the stock, is done by CNC machines. (Checkering is an operation performed on the wood stock of rifles, shotguns, and other shoulder arms, and on the grips of handguns, for decoration and to provide a more frictional surface for holding.) Originally in the industry, and currently for some deluxe guns, checkering is done manually by artisans who cut a series of spaced parallel V-grooves in the wood with hand tools similar to files. Some lower-priced guns have checkering done by impression rather than cutting. Other guns use injection-molded plastic stocks. The butt plate is compression molded (4B1) from phenolic resin. Springs and screw fasteners are normally purchased from subcontractors who specialize in these components.

Final assembly is normally a bench operation. Experienced workers put the entire gun together from finished subassemblies and parts. The firing mechanism is tested without bullets and then is test fired with an excessive charge to confirm the strength of the components. Shooting accuracy tests are made on samples of finished guns. After test firing, the gun is cleaned, polished, inspected, wrapped, boxed, and shipped to wholesalers.

gutters, roof - if metal, are normally made of aluminum and are made by roll forming (2F7). Painting normally precedes forming and is carried out by roller coating (8D2) or spray painting (8D6). End pieces, tees, and elbows, are made by conventional blanking and forming press operations (2C4 and 2D2). Plastic roof gutters are profile extruded (4I1) of mineral-filled vinyl material, normally white in color, from titanium dioxide pigments mixed into the vinyl. Plastic downspouts are also extruded. Plastic elbows, mounting brackets, and connectors are injection molded (4C1) from essentially the same vinyl material.

gypsum plaster - Gypsum is a natural material, calcium sulfate ($CaSO_4A\ 2H_2O$), found throughout the world. When used to make plaster, gypsum is normally heat treated to about 375°F (190°C). This treatment partially dehydrates it and changes the chemical formula to $2CaSO_4\ A\ H_2O$. The material is then called *calcined plaster* or *plaster of Paris.* When water is re-added, the mixture will set to a solid material but, before setting, can be cast or applied and smoothed to form wall and ceiling surfaces. It is used for plaster walls in building interiors, for casting into decorative objects, and for making plasterboard (wallboard, gypsum board or drywall).

gypsum board - See *plasterboard.*

H

ham - is the meat from the rear quarters of the pig. The meat is cured by one or more of several methods: pickling (12J7), salting (12J8), usually by injecting a brine solution that includes salt, other preservatives, and flavorings; sugar curing (12J9); and smoking. Sometimes the ham is soaked in the brine instead of being salted by injection. A third method is to rub on a solid mixture of granules or powders of salt and the other substances. Smoking for a prolonged period may follow.

hammers - Hammer heads are drop forged (2A4b & 2A4b1) from carbon steel, trimmed (2C6), heat treated for through hardness (8G3c), and polished (8B1). The specified hardness per ASME Safety Requirements Standard B-107.41-2004 is R_c 45 to 60 for the striking face and R_c 40 to 55 for the claws. Handles are made as described below.

handles, cooking utensils - There are many different varieties. One of the most common types is compression molded (4B) or injection molded (4C5) of phenolic or another thermosetting plastic. These handles usually have a metal reinforcement or base structure, made from sheet steel by blanking (2C4), forming (2D2), polishing (8B1) and chromium plating (8C1) operations, before being incorporated as inserts in the phenolic moldings. A more recent development is the use of a thermoplastic elastomer instead of the phenolic, for easier gripping. The elastomeric material has temperature resistance to 400°F (204°C). Handles are fastened to the utensil by riveting or by screw fasteners, but spot resistance welding (7C6a) may also be used. Cast iron frying pans and pots usually have the handle as part of the casting. Other utensils, especially those to be finish coated with vitreous enamel, use handles formed from sheet metal, tubing, or solid rods. They are brazed to the utensil. (Also see *cooking utensils.*)

handles, tool - Wooden handles for hammers, axes, rakes, hoes, and similar tools are machined from hickory or ash. Round handles are turned on lathes. Those with special shapes are machined on special equipment. On these machines, the workpiece is held in a spindle and slowly rotated. Milling cutters move in and out as the workpiece rotates to machine an oval or other cross section in the workpiece. As the operation progresses, the cutter also moves axially along the workpiece. Movement of the cutters may be controlled by cams, tracing templates, or a CNC (computer numerical control) system. Plastic handles for hammers are made from glass- or carbon-fiber-reinforced polyester, molded with the pulforming method (4G12). Plastic handles for screwdrivers, files, and other hand tools are injection molded, usually with the metal member of the tool as an insert in the mold (4C6).

hand tools - See *hammers, pliers, wrenches, screwdrivers* and *handles, tool.*

hardboard (including tempered hardboard) - See 6F6.

helium - is produced chiefly from natural gas. The gas is liquified at a low temperature and high pressure to remove other components. (See 11C1a - *fractional distillation.*) Helium is 70–85% pure at this point, with the balance composed primarily of nitrogen, but with some hydrogen, methane and neon. The crude helium gas is then compressed to about 3000 psi (21 MPa) and cooled to about –340°F (–207°C or 66K). At this temperature, it is brought into contact with cooled activated charcoal. Adsorption by charcoal of the other gases yields helium of 99.995% purity[3].

herbicides - There are many different types of herbicide, both in their action and chemical make up. The common 2,4-D type is made by chlorinating phenol to 2,4-dichlorophenol which is then distilled to purify it and convert it to the sodium salt. That material is reacted with sodium monochloroacetate, formed by chlorinating acetic acid, and then reacted with the 2,4-dichlorophenol to form 2,4-D. 2,4-D attacks broad-leaf plants but not grasses. Cresol, a derivative of coal tar or petroleum is a raw material for other herbicides. One herbicide used in aerial spraying of cocaine-producing plants is glysophate. Others are sodium arsenate, which is applied to leaves, and chlorinated benzene, which is added to water to control aquatic weeds.

high-density polyethylene - See *polyethylene, high-density.*

hosiery (stockings and socks) - Seamless hosiery, by far the most common type, is knitted in tubular form on circular warp knitting machines (10D and 10D1). (Also see 10A2 re nylon for hosiery.) Shaping of circular-knit hosiery is achieved by gradually increasing or reducing the size of the knit loops from the top of the hosiery to the toe portion. The part that fits the heel is shaped by a mechanism that drops courses in the knitting sequence. The fit of hosiery to the legs is facilitated by the stretch capability of knitted fabrics and by the use of nylon and spandex yarns that are stretchable. Sewing machine stitching (10H4) is used to close the hosiery at the toe end, and to provide a hem (welt) at the top.

Some hosiery is knitted on flat machines and achieves a good fit throughout its length by reducing the number of knitting loops for the portion that must be smaller to fit the leg or foot of the wearer. However such hosiery has a seam where the edges of the knitted piece are sewn together.

houses, prefabricated (modular houses) - are made with methods that, in many ways, are not strikingly different from those used when constructing a house on-site. The same wood and wood-product materials are used. The differences are that the prefabricated house is built inside a factory building that supplies light, heat, fixtures, cranes, workbenches, and power tools, that make the tasks faster and easier under more ideal working conditions. Framed floor, wall, ceiling, and roof panels can be completed on fixtured workbenches, and then moved by crane - or other means - to be assembled with other panels. Wiring and piping can be installed when conditions are optimum to do so. On the other hand, the need to transport the finished units on roadways limits the size, especially the width (maximum: 16 ft.) and height, that can be prefabricated. Houses within the transportation size limits can be virtually completed - as much as 95% complete - within the factory before shipment. For larger and more complex house designs, modules for sections of the house are prefabricated in the factory, and shipped with other modules to be mounted and fastened together at the house site. Using the modular system, very large and elaborate houses can be constructed but, in such cases, the modules may comprise only 40% of the total house-building operation; the rest of the work is done on site.

Another difference in prefabrication compared with site fabrication is that adhesive bonding of certain components, such as plasterboard and much sub-flooring, can be employed, leading to improved quality and reduced labor time. In the factory, more sophisticated cutting machines, including those that are computer-controlled, can be used to make necessary cuts in frame and panel members, particularly the angled cuts needed with roof structures, roof intersections and dormers. However, no foundation or other masonry portions of the house can be prefabricated. Brick or stone siding, steps, fireplaces, and concrete floors, are made at the house site. At the site, modules are positioned on the prepared foundation, and fastened together, and electrical and piping connections are made. Modules are also weather-sealed together. Final roofing and exterior siding are completed at junction points.

Fig. H1 shows operations in one factory for prefabricated house modules that employs assembly-line techniques. Normally, in this facility, a house module, constructed from individual wood pieces, is completed in five days. Panel assemblies are fed from one side of the assembly line to the modules-in-process on the line. The modules-in-process are advanced along the line at the same time. (The modules are all assembled on wheeled frames.) When a module arrives at the end of the line, it is nearly ready for shipment and final items such as kitchen cabinetry and exterior siding are then installed.

Fig. H1 An 80,000 sq ft (7400 sq m) factory building for the construction of house modules. The module assembly begins in the foreground, starting with the floor panel, and extends to the end of the building. The panel assemblies for floors, walls, ceilings, and roof are assembled in the area on the left and moved to the modules in process at the right. After several panels are added, the modules are moved one or two spaces along the line to be in position to accept further wall panels, then ceiling and roof sections, and other components. Finished modules are shipped from the far end. *(Courtesy Signature Building Systems, Inc., Moosic, PA.)*

housings, appliance - Housings for large appliances such as refrigerators, stoves, dishwashers, clothes washing machines, and dryers, are made from sheet steel except for plastic trim, handles, knobs, and most control panels. These products are made in large quantities. Therefore equipment and tooling designed for high production are economically justified. Mild steel sheet in roll form is fed to large mechanical punch presses for blanking (2C4), punching (2C5), forming (2D2), drawing (2D5) and trimming (2C6) operations with sophisticated dies. Progressive (2E1) and compound dies (2E3) are frequently used. Transfer die lines (2E2) along with robotic handling (14G4), for some operations, may be employed to handle the large stampings involved. These parts are fastened together with projection welds (7C6c) and other resistance welds. Removable housing parts are typically fastened with sheet metal screws and machine screws to projection-welded nuts (7F4a). The housing parts are painted on electrostatic painting (8D7) lines that usually include cleaning (8A) and phosphatizing (8E2) operations.

Plastic parts are normally injection molded (4C1). Hot stamping (4M2) is the common means of providing marking on control panels.

housings, business machine - The machines used in copying and printing centers have housings that tend to be a mixture of sheet metal and plastic parts with plastic parts predominating, except for the very largest machines. The plastic parts are those that are contoured, round-cornered, and smaller; the metal parts are those that are larger, or contribute to the structure of the machine, or are rear or side panels. Control panels are normally plastic. While conventional injection molding (4C1) is widely used, the moderate production quantities of this equipment makes structural foam injection molding an attractive alternative. The purpose of the structural foam is to provide thicker, more-rigid walls for the parts, but a major advantage is that the low-pressure foam process enable less-rigid, far less expensive, molds to be used. Low-pressure injection molding of structural foam (4C3a) and reaction injection molding (4C3b) are such processes. If higher-quantity production is involved, higher tool costs can be justified, and the high pressure process (4C3c), or the gas counterpressure process (4C3d) for structural foam, can be used. Co-injection molding (4C3e) or gas-assisted injection molding (4C3f) are other alternatives. The plastic parts are molded and metal panels are painted to match one another's color.

The metal parts, for the low- or moderate-quantity production, that is common for such products, are made from operations and equipment typical of a sheet metal job-shop: shearing with squaring shears (2C1 and 2C1a), hole making with turret punching equipment (2C5a), that is sometimes computer numerically controlled, with notching and other operations to create the required outline of each part. Bending and some forming are commonly performed with press brakes (2D1a).

Business equipment of the personal computer variety and the personal printers and scanners that accompany them are produced in high quantities and standard, high-production, injection molding is used for many parts. Metal cabinets for PC's can be made with production metal stamping processes. With most desktop units, the major portions of the case, including the cover panel, are made from sheet steel. This also may be done by job-shop shearing, punching and forming equipment but, if the product is to be made in large quantities, high-production compound and progressive die punch-press operations (2E1 and 2E3)are often employed. Reinforcing members, made with sheet metal processing methods, are part of most computer cases. The main components and smaller parts of the case are fastened together with pop rivets (7F4b), resistance welds (7C6), and screw fasteners (7F4a). After assembly the case is spray painted (8D7) or powder coated (8D8), usually electrostatically. The front panel of the case is made from several injection molded (4C1) parts and includes or accommodates switches, slots and drive bays.

hydraulic fluid - for hydraulic power systems ("fluid power" systems), is mostly made through the distillation of petroleum but other common types are made from synthetic lubricants, oil-water emulsions and water-glycol mixtures. Specialty and proprietary hydraulic fluids are made by a number of chemical companies. There are numerous different varieties and many ingredients are usually involved. Ingredients are added to the basic material for special properties or property enhancements. These additives include defoaming agents, lubricants, thinners or flow aids, corrosion inhibitors, and viscosity modifiers.

Organophosphate esters and polyalphaolefin are each the basis for two types of synthetic-lubricant fluids. They are usable over a wide temperature range and are suitable for higher-temperature environments. Polyalphaolefin fluids are made from ethylene, $H_2C{+}CH_2$. Other fluids, developed for higher temperature applications (such as the hydraulics of die casting machines), include diphenyl didodecyl silane and a fluid that has a base of tricresyl phosphate.

Flame-resistant fluids are used in aircraft hydraulic systems. One such fluid is a water-glycol liquid that incorporates additives for thickening, lubrication and corrosion resistance.

Biodegradable, vegetable-based, fluids are being used in some installations for environmental reasons to replace petroleum-based fluids that do not degrade well. The biodegradable fluids are made from estolides, which are fatty acids from sunflower, safflower, or other high-oleic oilseeds.

Hydraulic fluids are used in industrial machinery including cranes and agricultural machinery, aircraft controls, landing gears and brakes, automobile brakes, and transmissions.

hydrochloric acid (HCl) - a major compound used in chemical manufacture, is made primarily as a byproduct of the chlorination of hydrocarbons, both aromatic and aliphatic. It is also made by dissolving gaseous HCl in water, or by reacting sulfuric acid with sodium chloride. HCl gas is made by the direct combination of hydrogen and chlorine at a temperature above 482°F (250°C). The largest use of hydrochloric acid is in the pickling of steel. Other applications are the production of chemicals and pharmaceuticals and food processing.

hydrogen - for commercial quantities, is derived from hydrocarbon fuels. There are a number of processes. In one major method, steam is reacted with natural gas, oil refinery gas, methane, propane, ethane, or other light hydrocarbons. Nickel is the catalyst, and temperatures of the reaction range from 1300 to 1850°F (700 to 1000°C). The reaction yields hydrogen and oxides of carbon. With propane, the reaction is as follows:

$$C_3H_8 + 3H_2O \Rightarrow 7H_2 + 3CO$$

Hydrogen is also obtained from the electrolysis of water containing dissolved potassium hydroxide. Another source is as a by-product when brine solutions undergo electrolysis in the production of alkalies. Liquefaction of the other constituents of fuel gases also yields hydrogen.

I

I-joists, wooden - See 6F7 and Fig. 6F7-1.

ice, dry - See *dry ice.*

ice cream - is a frozen blend of cream or butterfat, milk, sugar, flavorings and sometimes small pieces of fruit, nuts, or other ingredients. Sometimes eggs are also included and the dessert is then called French ice cream or frozen custard. The liquid ingredients (milk, cream, sugar syrup) are added first and are thoroughly mixed. The mixture is heated and solid ingredients: (powdered milk, sugar, dried eggs, and a stabilizer, if used) are added. Agar and gelatin are common stabilizers that give a smooth consistency to the mixture. Pasteurization and homogenization follows heating and mixing. Homogenization breaks up particles of butterfat. Then the mix is refrigerated for a period and solid pieces of fruit, etc. are added, if part of the formulation. The mix is then frozen while still under agitation, to add air and ensure a smooth blend. The near frozen mix is then put into containers or other packages and is "hardened" (frozen solid). Soft ice cream does not receive the hardening step.

Sherbet and sorbet are made from fruit puree. Sherbet includes milk but has much less butterfat than ice cream; sorbet has no butterfat.

ice skates - have two major components: boots to fit the skater, and blades that are assembled to the bottoms of the boots.

Ice skate boots for figure skates are normally leather, but hockey skates are commonly made of a combination of plastic, leather, and fabric components. Both types of boots are made with the same methods used for shoes and other leather boots, with a few exceptions. The fit of the boot to the foot is closer to provide better control over the skates. Reinforcement is added to provide ankle support, and there is some additional padding. The soles and heels of the boots are made thicker, with vulcanized fiber, high durometer rubber, or a similar plastic to provide material for attachment of the blades. Internal steel guards may be installed at the toe and heel ends of the boot.

For figure skates, the blades are made from steel plate of approximately 1/8 in (3.2 mm) thickness. The plate is blanked (2C4) to the shape needed (including the ice pick teeth at the front of figure skates blades). The blades are heat treated for greater hardness and wear resistance (8G3). The sole and heel attachment plates are blanked from thinner stock than the blades and are welded by GMAW (gas-metal arc welding) (7C1d), or another arc-welding method to the blades. The welded assembly is polished (8B1) and chrome plated (8C1), though many made from stainless steel do not require plating. The blade is sharpened by form surface grinding (3C3) to provide a concave surface between the edges. The blades are then assembled to the boots with rivets in punched holes. The boots are polished and laced and the skates are packed in boxes for sale to customers.

inductors (chokes, choke coils) - See 13L3.

ink - is a dye or a fine dispersion of pigments in a liquid or paste. The base may be a drying oil or a plastic resin. Drying agents and thinners may also be used. Some inks are made from liquid dyes in similar vehicles. There are many formulations, depending on the application. Common uses for inks are writing, drawing, printing and marking. The pigment in most black inks is carbon black, but black writing inks usually contain gallotannate of iron.[2] This is made by reacting ferrous sulfate or another iron salt with an aqueous mixture of tannin and gallic acid. The resulting solution is not sufficiently dark when first applied, so is usually supplemented with a blue or black dye. After drying, it becomes darker and insoluble in water.

The simplest printing inks consist of carbon black in linseed oil with an additive to speed drying. More complex printing inks are now increasingly common and contain one or more of various suspended pigments in an oil vehicle with resin, solvent, drier, and adhesive. Drying may be by penetration and oxidation or by evaporation.

in-line skates - are made with a construction that, in many respects, is very similar to that used for ice skates, but in-line skates often tend to be more complex in the boot area. Both types of skates use a boot that is high enough and reinforced to support the ankle of the user. The boot also fits snugly for good control and has some internal padding. Otherwise it is made with methods that are consistent with those used to make other boots. Both ice and in-line skates have a frame that is attached to the sole of the boot to carry the blade or wheels. The boots can be made from fabric, leather, or injection molded plastic parts or various combinations of these. Some have external stiff plastic parts for ankle support, sometimes in one piece for each boot, sometimes in two pivoted pieces. With some skates, the entire boot shell may be molded of urethane plastic. The skate wheels are normally made by suppliers to the skate company and consist of ball bearings, nylon or other plastic wheel hubs and polyurethane or PVC tires. All the plastic parts of in-line skates are injection molded (4C1) with the exception of polyurethane wheel tires, which may be cast (4H). Four or five wheels are mounted in tandem on a metal frame that has an upside-down, U-shaped cross section. The frames are blanked (2C4) and formed (2D2) from sheet steel, aluminum, or titanium, and then chromium plated (8C1). Alternatively, frames may be made from extruded aluminum (2A3), or from injection molded plastic. They are usually fastened to the soles of the boots with rivets or a coupling device. Axle holes are punched or drilled in the frame. Axles are formed by cold heading (2I2), are plated, and held in place with threaded nuts. Many of the skates have a second frame piece at the heel, either of plastic or sheet metal, that holds a plastic block that can be dragged by the skater along the skating surface to act as a brake. The skates are assembled on a production line and packaged for shipment. Fig. I1 illustrates the major components of typical in-line skates.

Fig. I1 The key components of typical in-line skates.

insecticides (pesticides) - are made in many formulations, depending on the insects they are to be used against, how they act on the insect (from contact, digestive poison, inhalation poison, or reproduction blockage) and what is to be protected (people, crops, household goods, etc.). Both natural and synthetic active ingredients are used. One common ingredient in insecticides used as digestive poisons is calcium arsenate [$Ca_3(AsO_4)_2$]. Common active ingredients for contact insecticides are rotenone dust, nicotine sulfate solution and sulfur dust.[2] Powdered insecticides are usually mixed with a carrier powder that is inert to the insecticide but allows it to be spread more uniformly. Kaolin clay and limestone, finely ground, are two materials used.

DDT, previously used extensively, but now sparingly because of its toxicity to mammals and its long life, is a chlorinated hydrocarbon, dichlorodiphenyltrichloroethane $C_6H_3Cl_2(C_6H_4 \cdot CH_2CCl_3)$. Since restrictions on the use of DDT were instituted, many other chlorinated hydrocarbons, and other complex organic compounds that break down readily in the environment into nontoxic materials have been employed. They include dieldrin, aldrin, chlordane, endrin and heptachlor. Organophosphates that attack the nervous systems of insects but have a shorter life, are one family of insecticides being used more extensively. Carbamate insecticides, which are esters of carbanilic acid and are derivatives of carbamic acid, NH_2COOH, kill insects and their larva on contact, are less dangerous to humans, have a short active life, and soon break down to non-toxic substances[14]. These insecticides are carried on talc or synthetic clays[2].

Digestive poisons include several arsenic compounds (lead arsenate, copper acetoarsenite - Paris green, and calcium arsenate), and fluorine compounds (sodium fluoride and cryolite). Some contact insecticides derived from natural sources are nicotine (from tobacco), rotenone (from a plant root), and pyrethrum (from the flower of the chrysanthemum). Some inhalation insecticides are hydrogen cyanide, nicotine, methyl bromide, and naphthalene. They are used on plant materials in storage.

instant coffee - See *coffee, instant.*

insulation board (low-density fiberboard) - See 6F6.

integrated circuits - See 13K.

iron - Almost all iron is made by blast furnace. Other methods are direct reduction (producing solid or sponge iron), and direct smelting.

In the blast furnace operation, the product is pig iron, an intermediate material between iron ore and steel. Iron ore, coke, and limestone are loaded into the blast furnace. It is a steel container lined with fire brick and equipped with tuyeres, in the lower part, through which heated air is forced under pressure into the furnace. The combustion of the coke produces carbon monoxide gas which, as it rises in the furnace, reacts with the iron oxides to produce carbon dioxide and iron. The reaction is as follows:

$$Fe_2O_3 + 3CO \rightarrow 3CO_2 + 2Fe$$

Limestone acts as a flux and provides additional carbon monoxide for the reaction. The molten pig iron is drawn from the bottom of the furnace. Slag from the limestone and various impurities float on the surface of the molten iron and are also periodically removed from the furnace. The pig iron is high in carbon and contains silicon, manganese and phosphorous that are removed, if the iron is to be converted to steel during a subsequent process. Fig. I2 shows blast-furnace iron-making as part of the steelmaking sequence.

With direct reduction methods, the iron ore and other materials are heated to a temperature below

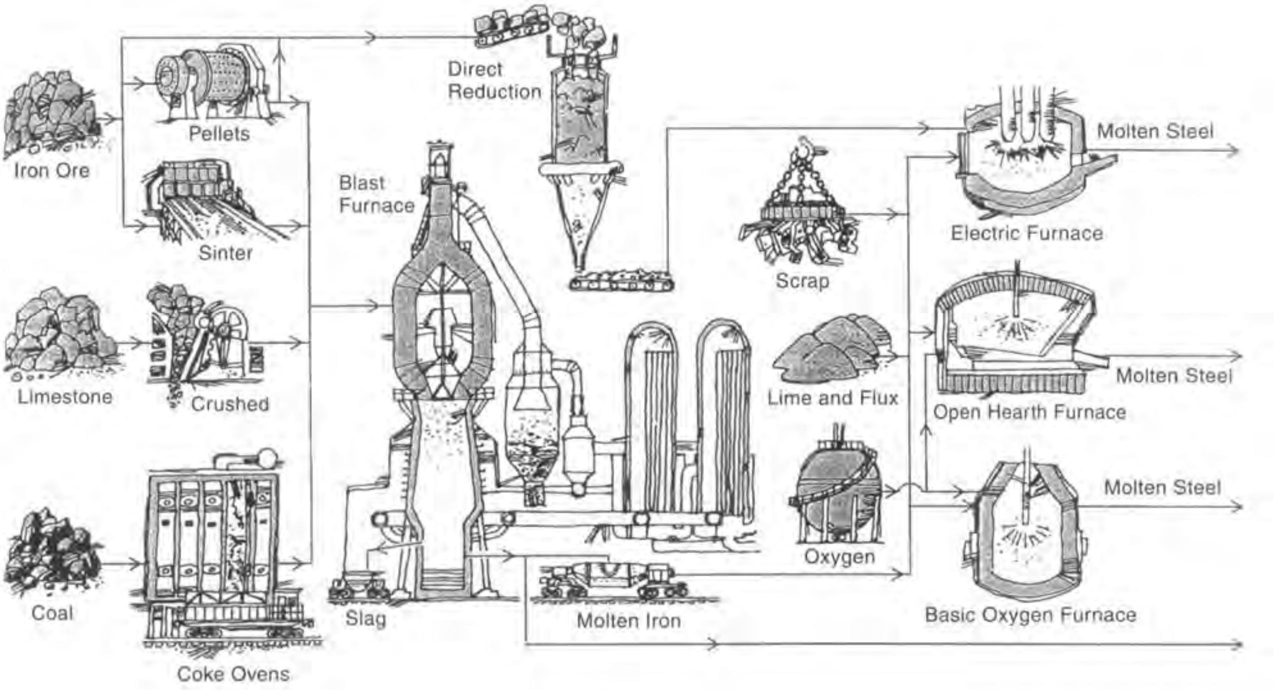

Fig. I2 The position of the iron-making processes, using a blast furnace and direct reduction, in the sequence of operations that produce steel (*Courtesy American Iron and Steel Institute, AISI.*)

the melting point of iron. There are several variations in the process. Some methods require natural gas. Methane, CH_4, can be converted to carbon monoxide, CO, and hydrogen, H_2, which reduce pellets of iron ore. Other approaches provide different reducing agents; some provide different means to bring the reducing agents in contact with the iron ore. Some methods use coal that is partially burned to produce carbon monoxide and other reducing gases. One method uses fluidized beds, another a moving-bed furnace, a third method, a rotary kiln. The iron produced by direct reduction is solid or sponge iron.

High-purity iron, called ingot iron, is made with the basic open-hearth process incorporating a 1- to 4-hour extension of the heating cycle at a temperature of 2900 to 3100°F (1592 to 1704°C). This process is used in applications where high ductility is required.[2]

isopropyl alcohol (isopropanol or rubbing alcohol) - See *alcohol, isopropyl.*

J

jars, glass - See 5A2b3.

jelly - is made from the strained juice of fruit or, in a few recipes, vegetables. Sometimes, several fruits are used. Citrus fruits and apples have high pectin content and may be included in jellies of other fruits. Jams, preserves, and marmalades include fruit pulp or fruit pieces. The fruit is harvested, crushed, separated from stems, leaves, and skin, heated, filtered, pasteurized, and chilled. It is then pumped into kettles and cooked three times. Sugar, pectin, and gelatin, if used, are added before the last cooking. The mixture is fed to a filling machine that meters the correct amount into jars that are then vacuum sealed and capped with metal covers. The jars are automatically labeled and packed by the dozen or more into corrugated cartons for shipment. Jellied candies are made similarly but include starch or agar.

jelly beans - are made from sugar, corn syrup, flavoring, coloring, and confectioner's glaze. Cornstarch is used as a mold material in the manufacturing process. It is deposited in metal trays where it is formed into open mold cavities. The forming is done by a machine with a large number of identical punches that are pressed into the cornstarch. Each tray has about 1200 cavities. The operation sequence is then as follows: 1) The jelly bean ingredients are well mixed and cooked in large vats. 2) The resulting liquid is transferred to a special casting machine, called a "mogul". The mogul deposits a small amount of the liquid mix in each mold cavity. 3) After the cavities are filled, the trays are conveyed to a dry room where the material cools and solidifies. The trays are left in the dry room overnight. The material in each mold will become the core of a jelly bean. 4) The next operation is a "sugar shower" that coats the cores with a layer of granulated sugar. The cores are subjected to both moist steam and the sugar, with enough movement of the cores to cover all sides. 5) The sugar-coated cores are then dried again for a few days. 6) The next operation is called "engrossing" or "panning". The coated cores are placed in a rotating container and sprayed with flavoring, coloring, and fine sugar which are then allowed to cool and dry for about 2 hours. This step is repeated several times - an average of 4, the number depending on the variety and flavor of the bean. 7) The candies are then polished. They are sprayed with confectioner's glaze, which is food-grade shellac in an alcohol solution with some carnauba wax. The candies are tumbled as the alcohol evaporates, and a shell is formed. The tumbling action smooths and polishes the surface of each jelly bean. This takes about 2 hours. 8) The completed candies are inspected for quality and, with some manufacturers, brand identification is stamped on each with a marshmallow-based edible ink. 9) They are usually then mixed with other flavors, packaged by weight by automatic equipment and shipped. The entire process takes 7 to 10 days.

jet engines (gas turbines) - The manufacture of jet and turboprop engines for aircraft and gas turbines for other applications involves the use of difficult-to-process metal alloys, ceramics, composites and other sophisticated materials. Titanium is a common material, often alloyed with nickel and aluminum.

The typical turbofan jet engine has almost 25,000 parts. The major components are: an intake fan; a compressor (with alternate rows of rotating and stationary blades) to raise intake air pressure to 2 to 12 times its original value in two stages, a low-pressure booster stage and a high-pressure stage;

a combustion chamber with up to 20 fuel spray nozzles; a turbine to drive the compressor and a fan, (The temperature in the chamber typically reaches 2000 to 2700°F (1100 to 1500°C) and even higher for short periods at take-off of the airplane); a main central shaft, or two or three concentric shafts, and bearings; and an exhaust duct system. The exhaust system may include a mixer, to combine cool air from the fan with hot exhaust from the combustion chamber. There are also accessories (fuel pump, lubrication pump, instruments, and an electric starter-generator) which are connected by gearing to the main shaft. There is a fuel control system that senses pressures, temperatures, and rotational speed to prevent excessive speed or temperatures. The engine also includes nacelles or other air ducts to channel the air flow from the fan. See Fig. J1 for a simplified illustration of the components of a typical turbofan jet engine.

The air intake fan, which may consist of three sets of blades, is made from a titanium alloy. Individual blades are hollow, but the hollow space contains a titanium honeycomb structure to support the titanium skins. The skins are hot formed, assembled with the honeycomb and welded. The lower ends of the blades are machined to fit a hub or pitch-adjusting components on the main compressor shaft. Some jet engines are now using plastic composite intake fan blades, made from carbon fibers and epoxy.

The compressor sections include a series of notched rotating discs to which the individual compressor blades are attached. They also have stator blades attached to the inner surface of the compressor casing in between the rotor blades. The discs that hold the rotor blades are powder metallurgy forgings (2L1g) of aluminum alloy. Hot isostatic pressing (5B17a) is used to compact and sinter the powder particles[26]. The formed discs are then machined in lathes (3A) and machining centers (3T) and "fir tree" slots are broached (3F) near the edges to accept each blade. The compressor blades are made from titanium alloys by ceramic mold casting (1C1) and machined to a "fir tree" shape by broaching or form milling (3D5) at the bottom, to match the slots in the discs. Threaded fasteners lock each blade in place.

Combustion chamber parts are hot formed from sheet titanium alloys and welded by GTAW (Gas Tungsten Arc Welding)(7C1e) or GMAW (Gas Metal Arc Welding)(7C1d) with argon or argon-helium shielding gas. The combustor may be lined with ceramic materials to provide resistance to the high heat. Plasma-sprayed zirconium is currently used (8F4d).

Turbine discs are also made by powder metal forging and, after machining, are hard faced with refractory metal to provide wear resistance against the hot gases that strike them from the combustion chamber. Turbine blades are made by

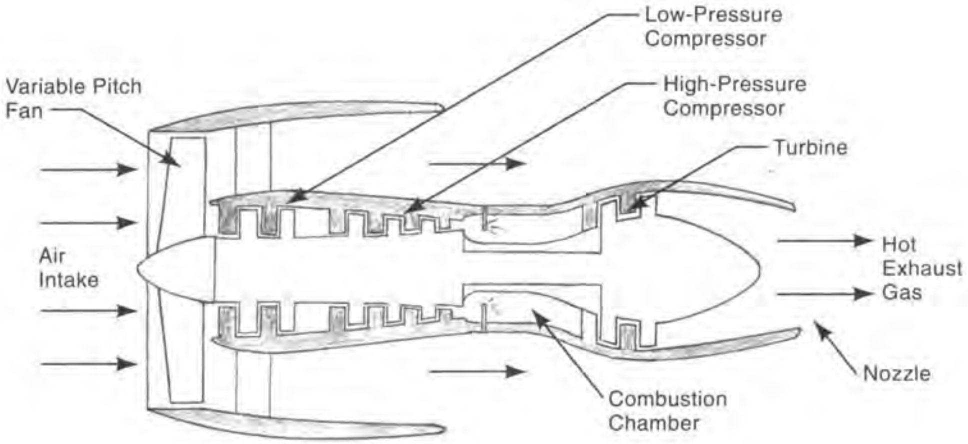

Fig. J1 A simplified cross-sectional view of the components of a typical turbofan jet engine.

investment casting special nickel-aluminum-titanium alloys[26]. The casting process has included directional solidification of the molten metal. This is an oven treatment that controls the cooling to a prescribed rate to align the metal molecules within the blade and improve its strength against the extreme centrifugal forces and hot gases that it faces. However, current practice is to cast the blades with methods that cause the metal to solidify as a single crystal.[27] (See 13K2 for single crystal casting of silicon for semiconductors.). The blades are subjected to hot isostatic pressing to close any porosity that may result from the casting operation. The blades may also be given aluminide diffusion coatings by pack aluminizing for oxidation resistance, or a coating of MCrAlY (M = Co,Ni, or Co/Ni) by PVD (physical vapor deposition - sputtering) (13K3a5) and overcoated with a ceramic coating (zirconia) as a thermal barrier. An intricate pattern of cooling channels for the blades is cast in, but there is extensive machining of the blades after casting. Automatic transfer equipment is used to move the blades from machine to machine and machine loading and unloading is robotic. Electrical discharge machining (3I1) and electrochemical machining (3I2) are normally employed, the latter to drill small, parallel cooling holes in the blades. These holes provide a layer of cooling air on the surface of the blades. The surfaces are honed (3J1) for improved dimensions and surface finish.

The exhaust duct system includes inner ducts and afterburners (tailpipe) cast or formed from titanium or aluminum with a sound-absorbing ceramic honeycomb material. Outer parts are made from Kevlar® and carbon fabric reinforced plastics.

The quality of all parts is carefully verified before the parts are assembled. Castings and stampings are checked for freedom from checks and cracks, using fluorescent penetrant, ultrasonic, and other tests. Dimensional checks are made with coordinate measuring machines (14D1) and shadowgraphs. All rotating parts are dynamically balanced before assembly. (The 20,000 rpm rotating speed of the engine applies very high centrifugal forces and stresses in rotating parts.) These parts are all assembled on a main shaft or concentric shafts which are turned on CNC lathes from tubular stock.

Considerable assembly work is required to convert these components into a working engine. At some manufacturers, the turbine blades are robotically assembled to the turbine hubs but most assembly is manual. The process begins with the making of a series of subassemblies or modules. A typical engine will have seven or more major modules. These usually are assembled in other plant locations or may be made by another company. After these modules are made, they are brought together at the engine assembly area. An assembly fixture is employed and, for the addition of some modules, the engine may be oriented in a vertical position to facilitate the work. Cranes and other material handling devices move the modules into position in the fixture. Major modules are put together before peripherals, the auxiliary equipment such as electrical devices and connecting wiring, hydraulic lines, pumps and valves, etc., are assembled. Full assembly of tubing, wiring accessories and the engine nacelle takes place at the aircraft manufacturer's facility rather than the engine factory. However, sufficient apparatus is installed to permit thorough operational testing of the engine before shipment.

The first tests are static tests in that the engine does not run. All systems (fuel, cooling, instrument, control) are first tested individually to verify that they operate properly. The engine is then operated while it is mounted on a test stand to confirm that it runs correctly, delivers the specified thrust, uses fuel at the specified rate, and is free from vibration, overheating, and other faults.

Machining processes for all the mechanical parts are extensive and must be precise and capable of handling alloys of low machinability. Sophisticated computer-controlled equipment is employed in many areas, and advanced techniques such as electron-beam welding, critical heat-treating processes, laser machining (3O), and electrical discharge machining (3I1), are utilized, along with more conventional machining and grinding.

The turboprop engine is very similar to the turbojet engine, differing in that the power is delivered primarily from the rotation of a propeller rather than the reaction from expelling exhaust gases at high speed. Gas turbines for non-aircraft use are also similar to those for aircraft, from the standpoint of both the design, and the manufacturing processes used. Turbine blades for power generation or vehicles may have turbine rotors made from silicon nitride ceramic with the ceramic process supplemented by hot isostatic pressing.

jet fuel - is one of the light distillates of petroleum refining. The U.S. military uses JP-4, a naphtha-based jet fuel with properties between that of gasoline and kerosene. Kerosene is also used as a jet fuel. (See 11H and *kerosene.*)

jewelry - Major raw materials for precious jewelry are gold, silver, and platinum metal, and various gemstones. The gold used is normally *karat gold*, an alloy of gold and other metals, usually copper, with some zinc. Silver is also alloyed, principally with copper, to provide greater strength. Sterling silver is 92.5 % or more pure silver. Sheet gold is available as a coating on another metal (usually brass or bronze), when strength or cost conditions dictate. This is "gold filled" material or "rolled gold", achieved by mechanical bonding when the materials are pressure rolled together. Jewelry can be made by most of the metal working methods outlined in Chapter 2, but much jewelry making, especially with precious metals and costly gemstones, is for one-of-a-kind or small-quantity fabrication, and is carried out by artisans using manual methods with a variety of bench and hand tools instead of mechanized equipment. Suppliers provide jewelry artisans with pre-alloyed precious metal in forms most suitable: sheets, strips, wire, rods, and ingots for casting. Wire and rods are available in a variety of sizes and cross-sections including square, triangular, half-round and other shapes in addition to round. These shapes are also available in various tempers for the jewelry maker. Suppliers also provide some common findings - preformed shapes of common components such as clasps and stone settings. These are prefabricated from production tooling to reduce the amount of hand labor necessary by the artisan.

Some of the specific operations that may be employed in making jewelry parts from precious metals are: rolling of sheet metal and wire, drawing of wire, making and bending tubing, forging - often with the metal at room temperature and with anvils and hammers, filing, drilling, cutting, texturing the surface, polishing, and patination.

Annealing is often necessary with gold and silver workpieces when they are heavily formed into new shapes. Annealing involves heating the workpiece to the point where a crystalline structure forms, holding it at that temperature for a period, and then allowing it to cool. Sometimes, the metal is quenched as it cools. Acid pickling is usually then necessary to remove scale. Silver can also be hardened when necessary. Both operations are performed in a furnace with a non-oxygen atmosphere.

Much precious metal jewelry is made by investment casting (1G). With original designs, a model of the proposed piece is sculpted from wax by artisans using a fine-pointed, electrically-heated forming tool and cutting tools similar to those used by dentists. After the carving of the wax model of the piece is completed, wax is added to provide pouring channels, runners, gates, and risers, as needed. The model is then the basis for an individual investment casting. With high-production jewelry, the wax model is usually injection molded of wax or polystyrene in a aluminum or, sometimes, a hardened steel mold.

"Soldering" (really brazing - 7B) is used to join metal parts together and the brazing alloys are formulated to match the color of the pieces being joined.

gemstones - are processed from rough stones with a variety of techniques.[22] These include *sawing* with several varieties of saws coated with diamond abrasive. For the initial cutting of large stones, first cuts are made with large-diameter circular saws. Further cuts are then made with smaller-diameter, thinner, circular trim saws. Wire or band saws are used for making curved cuts. The sawing machines are specially designed for gem cutting.

Grinding wheels, made with either silicon carbide or diamond abrasive, are used for rough shaping the stones. Then, wheels with finer abrasive may be used for further shaping and some surface smoothing. These operations use bench-top grinders and are manually controlled.

Lapping (3J2) against a flat surface is used to create flat surfaces on the stone. With a finer abrasive, lapping is also used to polish flat surfaces. A further shaping and pre-polishing operation, usually used for curved surfaces of cabochon gems, is *sanding*. Sanding of gemstones is usually performed on manually-controlled, abrasive-belt grinders.

Polishing (8B1) is a final step for all surfaces. It is performed by pressing the gem surface strongly against a moving surface of felt, leather, cloth, cork or wood, in the presence of a polishing agent. Typical polishing agents are diamond dust, silicon carbide, aluminum oxide, ceric oxide, chalk (calcium carbonate), rouge (red oxide of iron), tripoli (silicon dioxide), tin oxide, and zirconium dioxide. Some agents provide polishing action even though they may be softer than the gemstone being polished. Holes are made in gemstones by *drilling* with a rotating needle, rod, or tube, and an abrasive (diamond, silicon carbide or boron carbide), either loose or embedded in the end of the drill. Drilling machines that use ultrasonic vibration can be faster than those that use rotation to move the drills.

Faceting is a key operation in which angled flat surfaces are made and polished with a lapping technique to emphasize the reflectance, refraction, and color properties of the gemstone. Diamond dust is used as the abrasive and it is pressed ("charged") into the lap surface. The lap surface may be made from copper, tin, methacrylate, or phenolic plastic, ceramic, wood, or wax. Fig. J2 illustrates a typical "precision cut" faceting device. All the cutting, grinding, drilling, and polishing operations may be performed with some liquid coolant, either water or oil, or an emulsion of both. The means used for holding the gemstone when it is cut, ground, polished, or faceted is doping. Doping wax is a hot melt adhesive that holds the gemstone at the end of a hardwood or metal stick. Another gemstone treatment is *tumbling* (8B2) to shape rough gemstones to a smoother, rounder shape and polish them. Rotating or vibratory tumbling barrels are used.

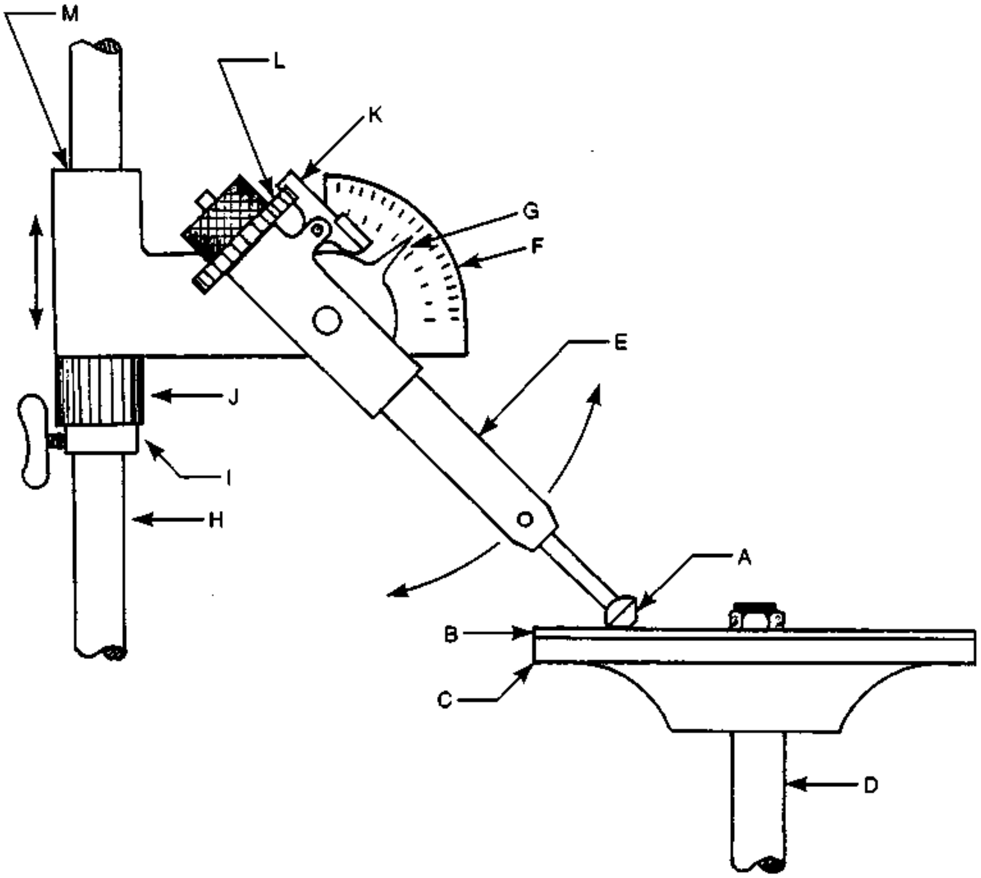

Fig. J2 A precision-cut faceting device for gemstones: A - gemstone being faceted, B - lap, C - master lap, D - rotating lap shaft, E - drop arm that can swing up and down to vary the elevation angle, F - elevation angle quadrant, G - elevation angle pointer, H - supporting shaft, I - locking sleeve for sleeve elevation, J - fine elevation adjustment, K - rotation locking arm, L - notched gear, M - sleeve that is moved up and down as the elevation angle is changed.

K

kerosene - is one of the light distillates of petroleum refining. It distills from the fractional distillation tower after gasoline and at a temperature between 345 and 550°F (174 and 288°C).[2] (See Chapter 11, sections H, H1a, C1 and C1c.) Kerosene is used for jet fuel and in some space heaters. Previously, it was used extensively for home heating and lamps.

Kevlar®[4] - is an aromatic polyamide, (aramid). It is a para isomer that is produced from *p*-phenylenediamine with isophthaloyl chloride. Kevlar has very high strength and is used as a tire cord and, with short fibers, as a substitute for asbestos, for example, in high-temperature gaskets.[2] It is also used as reinforcement in bulletproof vests. To make kevlar fabric, rods of the polymer, polyparaphenylene terephthalamide, are extruded through spinnerets to produce fine fibers which are spun together to make yarns that can be woven.

keyboards, computer - There are several different methods for converting movement of the computer keys to electrical pulses for a computer's processing circuits. Most of these methods use electrical contacts made by bringing together two electrical conductors. Other designs make use of the change in capacitance that occurs when two charged surfaces are brought nearer to each other. Perhaps the most common is the contacting system that uses a domed rubber sheet to push the electrical contacts together. These types generally have the following parts: 1) An injection molded (4C1) plastic (often ABS) upper housing that has spaces for the individual keys. 2) Individual keys, that are dual color injection molded (4C5) to provide visible lettering or numbering. These keys are inserted in openings in the upper housing. 3) A blanked (2C4) and formed (2D2) sheet steel or aluminum base. If steel, the base is electrostatically painted (8D7); if aluminum, it is anodized (8E1). 4) An injection molded elastomer sheet that incorporates a dome-shaped area at each key. (The domes act as springs for the keys.) 5) Two sheets of flexible plastic printed circuit board, separated by a blank sheet with holes corresponding to the contact area below each key. (The blank sheet provides spacing to insure that the contact areas don't touch unless a key is pressed. The circuit boards have no attached integrated circuits or other devices. They are purely to provide circuit paths in the key matrix.) See 13A4 for manufacture of flexible circuit boards. Circuit paths on the top and bottom sheets are screen printed (9D4b) with conductive ink. 6) A small conventional printed circuit board (13A) with one integrated circuit and several other devices attached. This board controls the key function. 7) A cable to connect the keyboard to the computer. Cable leads are soldered to the small circuit board. 8) A number of self-tapping screws to hold the keyboard assembly together. All the parts are assembled together, and the unit is tested and packed.

keys - for locks are normally made from brass sheet stock. Keys are blanked (2C4), embossed (2D7), and coined (2D6) or form-milled (3D5) along the key, to a cross section that mates with the key slot. They are then milled across the key to a profile shape that conforms to the particular lock on which they are to be used. This is a computer controlled operation (3U2) in which the cutter follows the prescribed path. The key may be further processed by electroplating (8C1) and insert injection molding (4C6) to attach a small plastic handle.

keys for computer keyboards - are two-color injection molded (4C5)(See above.)

kidskin - is leather made from the hides of goats, traditionally young goats. It is used for gloves, shoes, pocket books, and linings.[2] See *leather*.

knit fabrics - are fabrics that have yarns fastened to each other by interlocking loops. Knitting is described in 10D.

kraft paper - See 9C5, 9B and 9B2b.

L

lace - originally made only by hand, has been made since the early 19th century by special lace-making machines. The methods are: needlepoint lace-making that uses only one thread, which is made into various stitches with a needle, and bobbin lace-making that uses many separate thread bobbins and the threads are intertwined, braided, or tied. Automatic lace machines are of three types: One type, similar to knitting machines, is identified by the Leaver, Nottingham and Pusher machines; another type is the circular Barmen machine that produces a lace closely similar to handmade lace using the bobbin method; and the third is the Schiffli embroidery machine that uses cloth as a base for the lace stitches, and where the base fabric is destroyed chemically after the operation. The Leaver machine utilizes a pattern control similar to those of Jacquard looms (See Chapter 10, section C1.) Lace fabrics are purely decorative and are used in curtains, table cloths, pillow covers, and for ornamental effects on garments and handkerchiefs.

lacquer - is a paint made by dissolving a plastic resin in one or more solvents. The formulation may also include a plasticizer or softener, and a pigment. Common solvents are anhydrous alcohol, toluol, or benzol. Nitrocellulose, cellulose acetate, and cellulose butyrate are commonly used plastic resins, but acrylics and melamines may also be used. Lacquer dries rapidly from the evaporation of the solvent, leaving a solid thermoplastic coating on the object painted. It is used in furniture making, as a quick-drying coating for many products, and for household use. With pigments, it is sometimes referred to as a lacquer enamel. Automobile enamels that are not lacquers nevertheless are often referred to in the trade as lacquers.

ladders - Ladders are commonly made of extruded (2A3) aluminum or, sometimes, magnesium. The rungs constitute one extrusion, the side frames another. However, the legs on some ladders are made from extrusions of fiberglass-reinforced polyester (4I1). The parts are extruded and then saw-cut to length. Holes are punched (2C5) in the side frames to accommodate the cross bars. It is common to make the rungs hollow with an egg-shaped cross section and to hold them in place by upsetting the ends that otherwise would slightly protrude from the frames. Some diagonal braces between frames and steps are blanked (2C4), and formed (2D2), from steel strip and then zinc plated (8C1). Zinc-plated steel rivets are used to fasten the braces to other members through punched holes. Extension ladders have aluminum latching members made by permanent mold casting (1D1). Other latching parts are steel stampings and standard commercial bolts. Many ladders have injection molded plastic feet placed over the bottom ends and held by rivets. Rivets are upset with hand-operated power tools as the ladders are assembled.

lasers - are of several types: low-power varieties such as diode lasers, that are used as laser pointers, levelers, and target designators; and higher-power, solid-state or gas lasers that are used for manufacturing processes and military applications. Beam quality, wavelength and efficiency, often depend on the nature of the material in which the laser beam is generated. Solid-state lasers, i.e., those that are crystal-based, are often characterized by higher operating efficiencies and gas lasers by broader wavelength range capabilities.

The following is a manufacturing sequence for solid-state, high-power YAG (Yttrium-Aluminum Garnet) lasers:

1. Large, single-crystal boules of yttrium-aluminum garnet ($Y_2Al_3O_3$) are made using the same single-crystal technique used to make silicon semiconductor wafers (See 13K1 and 13K2). The boules are doped with Neodymium, a rare-earth metal. The boules, typically 4 inches (10 cm) in diameter and 8 in (20 cm) long are smaller than those made for semiconductor wafers. Such boules are often supplied to the laser manufacturer by specialty optical crystal suppliers.
2. Undoped YAG segments are often attached to a doped (i.e., Nd:YAG) component. This mitigates thermal effects during the laser's operation. The method used to attach the segments is termed *adhesive-free-bonding* (AFB®), and it produces a permanently fastened, multi-element, component.
3. The bonding surface of the blocks or boule-segments of both doped and undoped YAG are lapped (3J2) and polished, using fine abrasives such as diamond and aluminum oxide-based slurries. The operation is continued until the resulting surfaces are polished to a flatness of 1/10th the wavelength of light and a smoothness of less than 5 angstroms RMS.
4. Under high-level cleanroom conditions, the two YAG blocks are optically contacted together, with the neodymium YAG often as the center portion of a sandwich arrangement. Because of the extreme smoothness and flatness of the parts, molecular attraction holds the parts together as one piece. The AFB process is then finalized by means of a high-temperature heat treatment of the composite element.
5. The resulting AFB boules are then either cut into rectangular blocks (slabs) using saws with diamond coated blades (3G5) or are made into cylindrical rods using diamond coated ultrasonic core-drills (ultrasonic deep-hole trepanning) (3C11 and 3B7).
6. For rod components, final finishing is often done in a center-type grinder (3C1a), using diamond abrasives, to produce precise cylindrical shapes. For slab components, the side surfaces are either as-cut, or are given a final finish by additional lapping processes. For both rods and slabs, the final surfaces may have a ground (matte) finish or be polished, depending on the specific laser design.
7. The two ends of the workpiece are trimmed off with another diamond saw operation and the end surfaces are lapped and polished to a smooth and flat mirror finish. Standard specifications for these surfaces are flatness of 1/10th the wavelength of light, smoothness of less than 10 angstroms RMS, parallelism within less than 60 arc seconds, and perpendicularity to the long axis within less than 5 arc minutes. These two surfaces then define the resonator of a solid-state laser.
8. The part's end faces are then coated, either with a material such as magnesium fluoride, that is anti-reflective ("AR coated") at laser oscillation frequencies, or with a combination of highly reflective and anti-reflective materials ("HR/HT coated"), often using a dichroic coating process involving a combination of material layers of aluminum oxide and titanium oxide.
9. In the case of an AR coated laser component, external mirrors which are either reflective and/or partially reflective at the laser wavelength (i.e., 1064 nanometers for the case of Nd:YAG lasers), are placed on either end of the rod or slab to define the laser cavity and enable multiple-pass laser operation through the YAG component. For the HR/HT laser component, the component end-faces define the laser cavity and no additional outside mirrors are required.
10. After coating, the laser crystal is complete, ready to be assembled with other components to make a laser head, the heart of a laser device. The other components include pumping apparatus such as laser diodes or flash-lamps to stimulate laser operation in the laser crystal, and external optics such as mirrors, beam splitter, lenses, and frequency shifters to produce the desired laser output.
11. After integration with appropriate power supplies and chillers, the laser is complete. Fig. L1 illustrates a typical YAG solid state laser.

latex[2,4] - is the sap of the rubber tree, *Hevea brasiliensis*, native to South America but now grown in Malaysia, Liberia and other countries. Rubber content in latex varies from 20 to 50%.

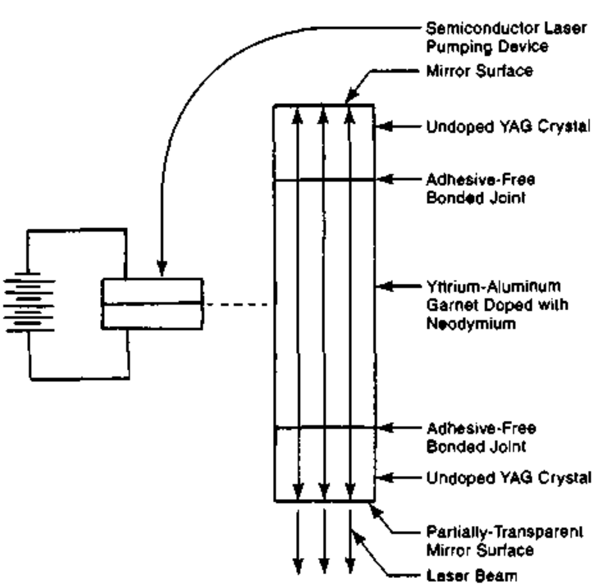

Fig. L1 A schematic view of a yttrium-alumina garnet (YAG) laser pumped by a semiconductor laser.

The sap is collected frequently in small containers to avoid spoilage. Before shipment of latex to a processing factory, the latex is strained and treated with ammonia or sodium sulfate, which acts as an anti-coagulant and preservative. The collecting and processing operations are labor intensive. See *rubber, natural* for information on the process of making rubber from latex. The term, *latex*, also now refers to dispersions of synthetic elastomer particles in water. Latex paints are water dispersions of synthetic rubber or plastics.

lawn mowers - The role of the household lawn mower manufacturer is to put together, on production assembly lines, a large number of components, most of which are received as sub assemblies from suppliers who specialize in components of the particular type. Gasoline or electric motors, injection molded plastic (4C1) motor housings, discharge chutes, wheels, handle bars, handles, control cable devices, batteries and starter motors, if used, drive belts, various screws and other fasteners, and mower housings (usually die-cast from aluminum (See 1F.) or drawn from sheet steel (See 2D5.), and shipping cartons, are some of the major components commonly supplied by other firms. To these components are joined a large number of major and minor parts made by the lawn mower company. These parts may include the rotary blade, axle shafts, small metal stampings and other parts that vary somewhat from company to company. The mower housing and some other metal parts are normally painted in-house with automatic electrostatic equipment (8D7) as the parts are conveyed overhead. The many parts are put together on an assembly line with a conveyor that moves the mower from station to station as it is assembled (7F2). Assembly is assisted by fixtures and power tools and, sometimes, robotic equipment. Riding mowers and other mowers have different parts but the system is essentially the same. Fig. 7F2-1 (in Chapter 7) shows an assembly line for professional riding mowers.

lead - is made from galena, an ore that contains a significant amount of lead sulfide. The ore is concentrated by gravity methods (that are feasible because of the high density of the lead it contains) to a lead content of at least 40%. The concentrate is then roasted, which removes the sulfur, by converting the sulfide to an oxide. The ore is then smelted in a blast furnace with coke, reducing it to metallic form. Other metals in the ore, principally silver but sometimes cadmium, bismuth, and copper as well, are well worth separating and this separation is done by various means. Scrap lead, principally from storage batteries, and then smelted, is another major source of lead metal.

lead glass (lead crystal) - (lead-alkali silicate glasses) are made by substituting lead oxide (PbO) for calcium oxide (CaO) in the batch of materials that is melted in glassmaking. (See 5A and 5A1a.) Glass formulations do not normally have more than 15% calcium oxide, and the percentage of lead oxide in lead glass may also be low, but may range up to 50% or more, so additional lead oxide may be added to the batch. Lead glasses have good working qualities. They are suitable for making engraved artistic glassware, and in other applications where optical properties and high electrical resistance are important and where nuclear shielding is required. Neon sign tubing and electric light bulb parts are other applications.

leather - processing is sometimes divided into two major stages: Stage 1, wet-blue processing that includes pre-tanning operations and tanning, and Stage 2, finishing operations, that make the hide fully ready for conversion into leather products.

The processing sequence for the first stage is as follows: 1) *fleshing* - Hides (kips) are run through a machine to remove excess flesh and fatty tissue from the under side. 2) *soaking* - Hides are immersed in a mildly alkaline, water-detergent solution, and soaked for 3 to 24 hours. This removes dirt and blood from the hide surface and restores moisture if the hide has dried out. 3) *beaming* (hand work) is performed on the hide as necessary. 4) *liming*. The hides are immersed in a bath of calcium hydroxide [$Ca(OH)_2$] and sodium sulfide (Na_2S) for 10 days. 5) Hair is removed from the hides with a *dehairing* machine. 6) Further liming takes place to remove unwanted proteins from the hides which are then de-limed. 7) *bating* - soaking the hides for 20 to 30 minutes at 90°F (32°C) in a solution of tryptic enzymes followed by rinsing. This treatment refines and cleans the grain surface. 8) *tanning* by the chrome process. This is a multi step operation that includes pickling in $Na_2Cr_2O_7$, two salt solution baths, reduction in $Na_2S_2O_3$, settling in borax to set the chrome salts on the leather fibers and rinsing in water. (The alternative tanning procedure, vegetable tanning, requires 2 to 4 months compared with 1 to 3 weeks for chrome tanning.) Tanning makes the hide into a stable material that resists spoilage or deterioration. 9) *sammying* - consists of passing the tanned hides through large rollers under pressure to remove excess moisture.

The sequence for the second stage may include the following operations: 1) *splitting* and *shaving* - The tanned hide is split through its thickness in a machine to produce layers of about 0.40 to 0.80 in (1 to 2 mm) in thickness. Any high spot or fleshy material not wanted is shaved off. 2) *retanning* - a second tanning operation to make the leather softer or firmer, as desired, and to remove any free acids that may remain from the original tanning. 3) *dyeing*, if specified. 4) *fatliquoring* - an oil treatment that ensures flexibility and gives the leather a soft feel. 5) *drying* - either in a vacuum dryer, by air drying, or stretched on a frame and oven dried. The objective is to reduce the moisture content to 15–20%. 6) *staking* - a mechanical treatment to restore flexibility that may be lost during drying. 7) *buffing* - of the surface to smooth the grain of the leather, especially if there are scratches or blemishes. 8) *finishing* - a wax or polymer finish coating may be applied. 9) *embossing*, if specified. 10) *measuring* - the size of the finished leather sheet. Fig. L2 shows this sequence.

leather goods - After the above processing, sheets of leather can serve as the major raw material for many products including: shoes (See *shoes*.), wallets, suitcases, purses, saddles, gloves, belts, key cases, watchbands, cases and containers, and many other items. Most of these products involve some sewing and are made with operations very similar or identical to those outlined in Chapter 10,

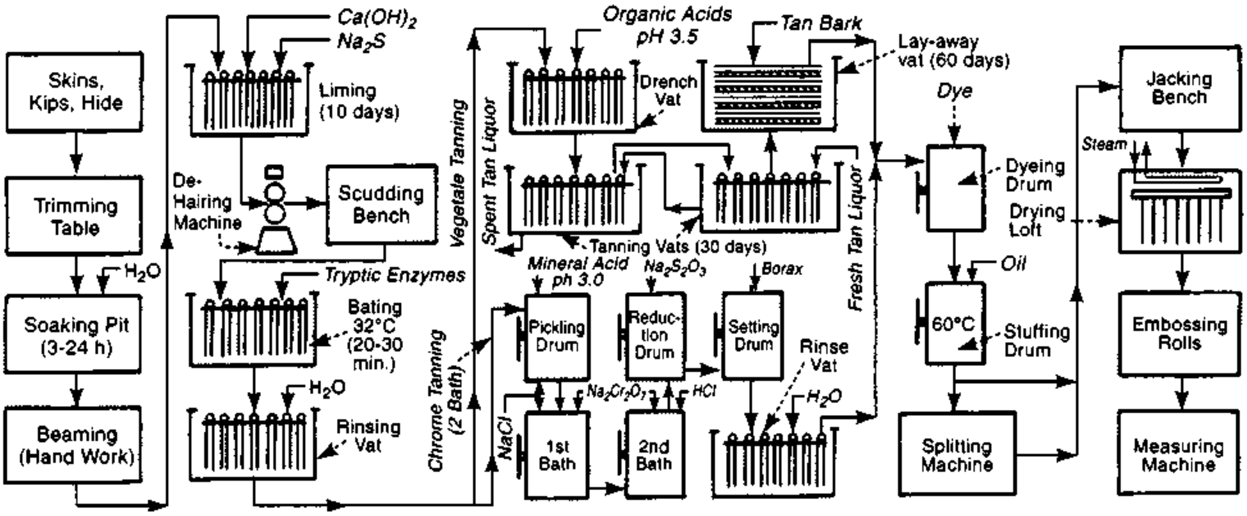

Fig. L2 The sequence of operations followed in manufacturing leather from hides. (*from Shreve's Chemical Process Industries, 5th ed., G.T. Austin, 1984, McGraw-Hill, New York, used with permission.*)

sections H through H4a which describe the production steps involved in making clothing and other sewn products from cloth and other materials (spreading, marking, cutting, sewing, seam bonding). When production quantities are involved, the leather sheets (skins) are stacked, marked at the top of the stack for cutting according to patterns, cut to the marked shape, with cuts through the whole stack at the same time, and sewn together in one or more sewing operations to make the desired product or major parts of it. Stacking sheets of leather for cutting is not as simple as it is with fabrics because skins are irregular and vary in size and shape, and consideration must be given to natural differences in various areas of the skin. Because of these differences, many leather parts are cut individually or in multiples of a few pieces by press stamping with steel rule or similar dies. (See 2C4a.) This approach simplifies the task of avoiding natural irregularities or discontinuities in the leather sheet. Some leather parts undergo skiving (thinning), edge beveling, or V-gouging (before folding, if the leather is thick). These operations are done with hand tools or, if the quantities are sufficient can be mechanized.

Sewing machines for leather are very similar to those for cloth but are designed and made specifically for leather work. Before or after sewing, the leather parts are processed further and may also be formed, decorated, and have special surface treatments to provide the desired appearance. Making optimum use of the leather sheet is even more important than it is with fabrics because of the higher cost of leather, compared with cloth. After cutting and sewing, parts may be further fastened together by riveting (7F4b), adhesive bonding or laminating (7D), or lacing. Before riveting or lacing, holes must be punched into the leather piece and this operation can be carried out with the same steel rule die that cuts the outline of the part, or can be done as a separate operation. Press tooling, simple hand punching tools, or hammer-driven punches made for hand leather work can be used. Rivet setting can be by a punch press, by foot-operated machines, or with hand tools or a hammer. Eyelets, grommets and snaps are also frequently used in leather products and are similarly installed.

Surface changes to leather include dyeing, stamping, modeling, burning and buffing, and may be made before or after leather parts are fastened together. Dyeing normally takes place at the tannery for the whole hide or lot, but parts are often selectively dyed. Dyes consist of oil, alcohol or water-based solutions that can be brushed, sprayed, or wiped on the surface. Stamping puts a design in the surface by compressing some areas. The leather piece is first softened by thoroughly moistening it from the backside. Decorations can be pressed in with special dies made for the particular design, creating an embossed or coined effect. When the design is made manually, with single-point or blunt hand tools, the operation is called modeling. Burning is a similar operation performed with a tool hot enough to singe the surface of the leather. After these operations, an oil-based conditioner may be applied to the parts or the finished product to ensure its flexibility and softness, and to protect it from moisture.

lenses - are made from glass or polycarbonate plastic. Glass lenses are made most often from clear crown optical glass with a refractive index of 1.523.[1] The glass is supplied to the lens manufacturer in plate form, free from imperfections. Many current eyeglass lenses are made from polycarbonate.

The methods used to make lenses for eyeglasses, telescopes, cameras, microscopes, binoculars and projectors, all follow the same process but with greater precision for instruments and many optical devices, and lesser precision for eyeglass lenses. The first step is to cut the glass plate, with a diamond-abrasive circular saw, into pieces of the desired size. These pieces are then either cut or chipped to a round shape, or the glass blank is heated to a softened state and then rolled to a round shape. The blank also may be pressed (5A2a) to a preliminary approximation of the surface curvature needed. Grinding (lapping - 3J2) to the precise surface curvature needed on each side then takes place in special machines, which use shaped lapping tools and an abrasive powder of aluminum oxide, silicon carbide or diamond. The tools for convex and concave lens surfaces are illustrated in Fig. L3. The operation starts with a coarse abrasive and proceeds in steps, with progressively-finer abrasive particles, and two or more successive tools. Both the tools and the lens workpieces rotate and their axes of rotation intersect. The surface generated is normally spherical, i.e., its radius of curvature is constant at all points. Both sides of the lens are ground in this manner. The next step is polishing

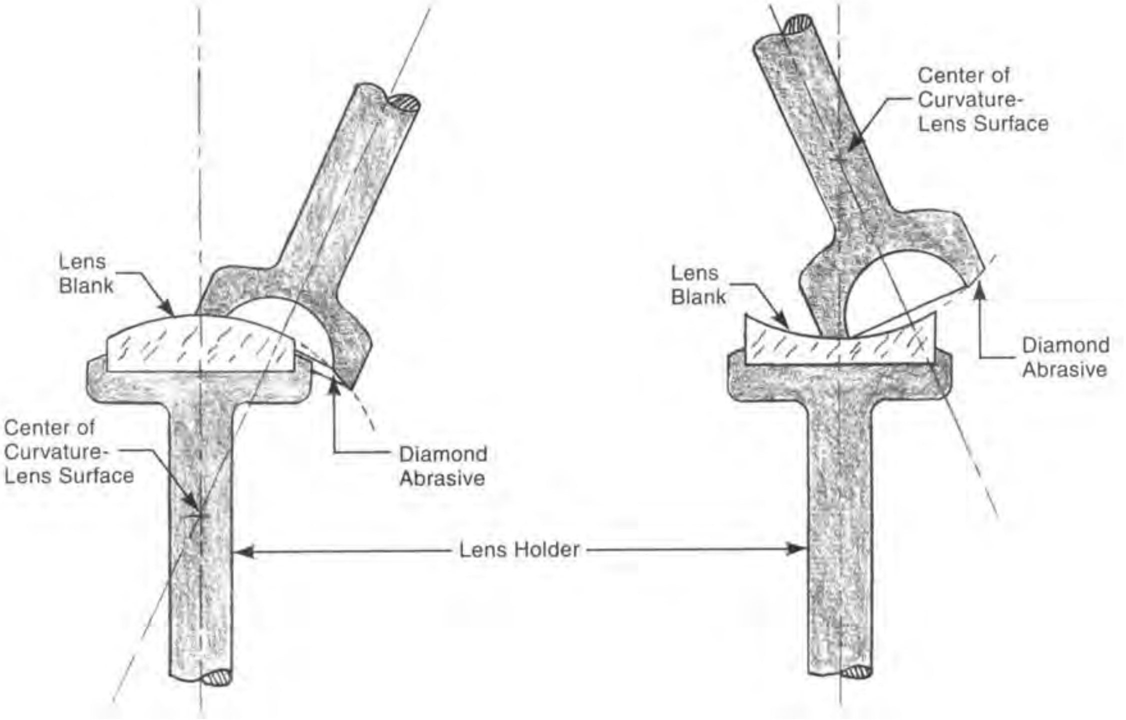

Fig. L3 The tools used to grind convex and concave lens surfaces.

each surface. Polishing is accomplished by mounting a number of lenses on a block, where they are held with pitch, against a rotating wheel covered with cloth, wax, or pitch, and charged with an abrasive of rouge (hydrated iron oxide) or other metallic oxide. The process may take a number of hours. Both sides of the lens are polished and then each lens is ground at the edge to center it in a lens holder. The edge grinding is carried out by holding the lens in a lathe chuck with its optical center on the axis of rotation and using a brass tool and abrasive to effect the necessary cutting. Eyeglass lenses are ground to the shape needed to match the eyeglass frame and ground with beveled edges to secure them in the frame.

Plastic lenses are made with a similar process of grinding and polishing the surfaces and grinding the shape. Plastic lenses for eyeglasses may be dipped into surface treatment liquids to provide ultraviolet blockage, colors, or tints, and scratch resistance. Plastic lenses are lighter than glass, less costly, and more impact resistant.

Compound lenses are assemblies of several lenses in a tubular holder with their optical centers in line. The lenses are ground to complement one another in providing sharper focusing and less aberration of the image. They may be adhesively bonded together or held in accurate fixed positions by the tubular holder. Telescopes, microscopes, and cameras, may have as many as 20 lenses in a compound arrangement when zoom capability is needed and up to about 10 in other designs.

lenses, contact - Soft contact lenses can be made by a number of methods. In one method they are made by casting a liquid, transparent plastic, poly hydroxethyl methacrylate (pHEMA), to form a "button" of approximate lens shape from which the lenses are made. The buttons are initially rigid and are carefully inspected. Those with flaws are rejected. The acceptable ones are machined in a lathe to the correct curvature and size. Diamond-pointed cutting tools are used and both sides are machined. Both sides then may be lapped with methods similar to those used in making glass lenses (See *lenses*). The workpieces are held in the lathes and lapping machines on shaped arbors with suction, wax, or adhesive. The finished shape must not only provide the desired optical correction but must also fit the patient's eye. In some cases, particularly if the shape needed is uncommon, the lens shape may be provided completely from a flat plastic disc by machining and lapping. Other soft lenses are injection molded (4C1), but extreme care and the most sophisticated computer-controlled process is needed to achieve the correct shape, a smooth surface and freedom from internal plastic flow lines. These lenses may also be finished by lathe cutting and then lapping but, increasingly, the injection molding process is providing more finished lenses. Careful inspection is performed at critical stages during the process for all these methods. Magnification and shadow-graph methods are used to verify correct size, curvature, and freedom from internal flaws. Finished lenses are sterilized and boiled in a salt solution for several hours. The plastic absorbs the water and softens to the degree of flexibility needed for use. The lenses are then packed in individual bottles with salt solution approximating the composition of human tears, and are labeled for the left or right eye and with data identifying the size and correction factors.

licorice - is made from an extract of the roots of a group of fabaceae plants, that grow in Southern Europe, the Near East and parts of Asia. The roots are dug up, separated from the rest of the plant, and dried for several months. They are then crushed, ground up and boiled in water. The resulting juice is then strained and evaporated. The remaining material has medical uses, is used as a frothing agent in fire extinguishers and beverages and as a sweetener and flavoring in candy and tobacco. In making licorice candy, flour and starch are added and the mixture is extruded into the familiar candy shapes.

light bulbs, incandescent - are made fully automatically on special machines. Each bulb contains a tungsten filament, nickel-iron connecting wires for the filament, a sealed glass bulb, a glass mount for the filament wires, and an aluminum threaded base. See Fig. L4. A mixture of nitrogen and argon gases that replace air is contained in the finished light bulb. Also involved in many bulbs is a special white, light diffusing, coating powder for the inside of the bulb. The powder is "getter", a mixed material that removes the last of the oxygen from the bulb. A cement/sealant is used to fasten the threaded base to the bulb and mount, and a central insulator to the bottom of the base. The bulb is made by glass blowing. See Chapter 5, section 5A2b3, and particularly 5A2b3f and Fig. 5A2b3f, which cover the specific ribbon-machine blowing method used for making light bulbs. The glass mount that supports the filament is made by machine pressing a gob of glass (5A2a). The tungsten wire filament is wound into a coil shape, and the filament connecting wires are formed in wire forming stations on the automatic light bulb equipment. (See 2G for forming methods.) The formed filament and connecting wires are pressed together to form an electrical contact, and are incorporated in the mount as it is formed. The threaded base is formed from sheet aluminum (or brass) by deep drawing, and special forming operations that create the screw threads. (See 2B2 and 2D5.)

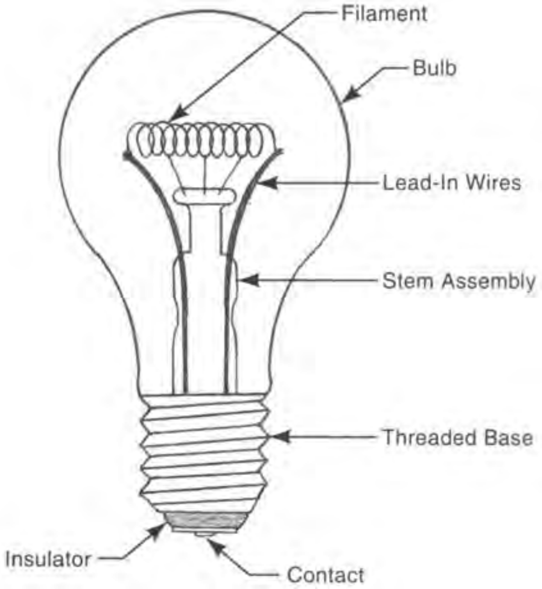

Fig. L4 A typical incandescent light bulb.

The end of the threaded base includes a press-formed glass ceramic insulator. The glass bulb, after forming, is heated, and the white coating powder is sprayed inside. The mount, cement/sealer, the bulb, and the base are all assembled together by the machine at high heat levels that melt the cement. During assembly, one connecting wire is welded to the threaded base and the other is assembled through the base insulator and is upset by cold heading (2I2) to connect it to a central contact blanked from sheet brass. Identifying information is printed on the top of the bulb. The bulbs are tested before shipment and the first surge of electricity heats the getter and uses up any oxygen in the lamp.

lights, fluorescent - See *fluorescent lights.*

linen - is the name for both the yarn and fabric made from the flax plant, which also provides seeds from which linseed oil is extracted. The stems of the plant yield the fiber that is converted to linen yarn and cloth. Fiber strands from flax are typically 12 to 30 in (30 to 75 cm) in length. Plants are uprooted and piled in the fields to dry. After drying, there are a series of mechanical and chemical operations to prepare the fibers. The operations include retting, drying, scutching (crushing and beating), and hackling. In retting, the plant stems are exposed to natural microbiological action to promote partial decomposition and separation of the fibers. This step is accomplished by spreading stalks on the ground, exposing them to rain, drying, freezing, and thawing. Alternative approaches put the stalks in streams, ponds, or special tanks. After retting, the stalks are scutched mechanically and the fibers are separated from the woody portions. Hackling combs the fibers to separate the long lines from the tow (short fibers). The long line fibers are drafted and doubled to form a rove (slightly twisted sliver of flax fiber). Both the rove and the tow are spun into yarn and further processed into textile products. (See Chapter 10.) The line (long) fibers produce a strong yarn. The tow produce a heavy coarse yarn used for heavier fabrics and for knitwear.

Applications include apparel, tablecloths and other household furnishings. Linen fibers are strong, and lower grades are used for such applications as twine, fire hose, industrial sewing thread used in shoe manufacture and bookbinding, fishnets, and hooked rug backing.

liquid crystal displays (LCDs) - range from simple black and white (light gray) displays such as those used on digital watches or digital thermometers, to large color screens for high-definition television sets. In black and white displays, an electric current, directed to a particular point of the display, causes the molecules of the liquid crystal material to change their orientation so that light no longer passes through and the display appears black at that point. In other points, the display appears white.

Digital displays include at least the following: 1) two layers of sheet glass, 2) a film of silicon dioxide on each of the sheets, 3) a mirror in the back of the display to reflect light back to the user of the display. In computer and TV liquid crystal displays, a light source is used instead of a mirror, 4) two grids of conductors made of indium-tin oxide that provide energizing electric current to points in the display. (The pattern of the two conductors is identical except for the leads connected to them.) The thin-film conductors are applied as a layer on the coated glass sheets. 4) a coated layer of transparent plastic to provide proper alignment of the liquid crystals, (Polarization on one glass sheet is at right angles to that on the other glass sheet.) 5) a layer of nematic liquid crystal material (Nematic liquid crystals have twisted molecules) and, 6) plastic spacers, sealed to the other LCD components, to contain the liquid. Fig. L5 illustrates the construction of a typical simple display. In addition to the display, there is a source of a series of charges directed to the display from sensing, integrated-circuit or computer equipment. Active-matrix LCDs have a more complex structure, with transistors behind each pixel of the display.

The glass plates are made from borosilicate glass because it has a low ion content and stray ions could distort the display image. Some displays use a plastic sheet instead of glass. The plastic is ion-free but has poorer optical properties than glass. The glass sheets are cut to the needed size by diamond sawing or scribing and breaking, and are polished and washed. Polishing (8B1), referred to as *lapping*, is done with a polishing wheel embedded with abrasive. The glass is then coated with a layer of silicon dioxide. Chemical vapor deposition (See 13K3a3.) is the common means for making such coatings. The coating insulates the conductive grid that will be installed on the glass from ions that may be present in the glass. The conductive grid or pattern of indium-tin oxide is evaporated onto the glass surface in a complete, very thin layer by methods similar to those used to make circuits on printed circuit boards and integrated circuits. (See vacuum deposition, 13K3a4 and sputtering, 13K3a5.) Then, using photoresist methods or screen printing to create a mask (See 13A1a through 13A1f.), the unwanted portion of the coating is chemically etched away (13K3b2) to leave the desired display pattern. The conductive pattern is coated with a transparent plastic, usually polyamide (nylon). The coating is then brushed with soft material to create grooves in the plastic that will polarize light that passes through it. The grooves on one sheet thus processed are at right angles to the grooves on the plastic coating on the

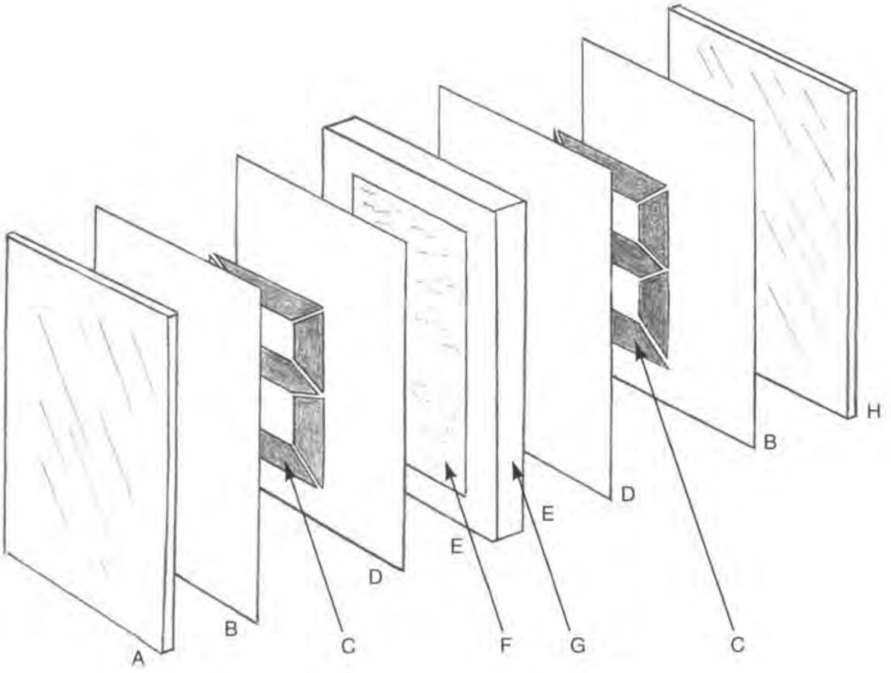

Fig. L5 The components of a typical simple liquid crystal display: A - front glass, B - silicon dioxide coating on one side of glass, C - grid pattern of a very thin layer of indium tin oxide, (7-segment numeral pattern, in this example), D - plastic coating over the grid and glass, E - sealant for the liquid crystal spacer, F - liquid crystal, G - liquid crystal spacer, H - rear glass with mirror coating on the back.

other glass sheet This method is one of several ways to provide alignment of the molecules of the liquid crystal. Other methods involve a different coating material or special application of the silicon dioxide coating of the glass.

When the display is assembled, a sealant is applied to the glass panels to contain the liquid crystal, which is injected after the spacer and glass panels are assembled. A critical dimension is the thickness of the liquid crystal, usually within 0.0002 to 0.0010 in (5 to 25 microns). The finished display is aged and mounted on the circuit board that provides the activating electronics.

Computer and other color displays require a much more intricate manufacturing process, especially with the active-matrix types. Clean-room conditions are required. Light for computer and TV displays is provided by a very narrow fluorescent light with a diffuser sheet to spread the light across the entire screen.

locks, combination - are made mostly from a series of sheet steel and die cast zinc parts. The parts used in a typical combination lock include: the outer casing (in two pieces, a cup and a cover),an inner casing, the shackle (U-shaped solid steel rod), combination discs that can rotate on a central stud (When slots in the discs are in alignment, the lock can be opened.), two studs, a latching device that may have an internal spring and a sliding element, a disc cam, a numbered dial (with knob), and some latching parts and fasteners. The dial and latching parts are die cast (1F). The discs are blanked (2C4) from sheet steel. Casing parts are blanked and drawn (2D5), trimmed, and shackle openings are punched in the side. The studs are screw machine parts (3A2c). The shackle is made from steel rod, cut to length and grooved on one end on a screw machine, notched by a milling machine operation (3D), press-bent cold (2H2c), heat treated for hardness (8G3), and chromium plated (8C1). The outer casing parts are also chromium plated and the dial is spray painted (8D6) (black with the recessed numbers painted white and wiped). Inner parts are zinc barrel plated (8C3) for corrosion resistance. The parts are carefully assembled. Studs are riveted to mating stampings by upsetting one end. A removable tag or label with the combination is assembled to the lock. The cover is crimped in a press operation to permanently close the internal parts. The locks are then blister packaged for retail sale.

low-density fiberboard - See 6F6.

lubricating grease - See *grease, lubricating.*

lumber - is made from logs as follows: 1) Logs are transported from the forest to a sawmill. 2) The logs are placed on a moving deck to move them to a debarking machine. 3) Logs are debarked by a machine with a rotating head equipped with a series of flexibly-held cutters that abrade the bark surface of the log. The log also rotates on its axis and, as the bark is removed, there is axial motion between the cutter and the log. 4) The log is moved to a headsaw, a large-diameter circular saw or a band saw accompanied by a device that holds the log and moves it axially against the saw blade. In one common system for cutting the log, the headsaw makes four cuts, changing the round log to a "cant" of essentially rectangular cross section. 6) The cant is moved to the resaw operation where a bandsaw cuts it into a series of boards. 7) The boards are run through an edger that trims off rounded edges and any bark remaining at the edges, but otherwise produces as wide a board as possible, or one of a prescribed width. The edger has two blades so that the width of the board is cut in one pass. 8) The ends of the boards are trimmed so that the boards are of prescribed length. 9) The boards are sorted by length, quality, thickness, and width. 10) Boards are stacked with like boards, with separating strips between layers, and the stack is transported to a location for air drying. 11) After air drying, which may require several weeks, the boards are kiln dried. 12) The boards are then planed on all four sides to more exact dimensions and smoother surfaces, and then are re-stacked without the separating strips, preparatory to shipment to customers. See Chapter 6 for further information and illustrations.

lumber, pressure treated - is conventional *softwood* lumber, usually of a high grade, that is pressure impregnated with a liquid consisting, in the United States as of 2004, alkaline copper quat (ACQ), a pesticide with anti-bacteria and anti-fungal properties. The ACQ was adopted by the industry to replace chromium copper arsenate (CCA) because of health concerns. The lumber to be treated is placed in a treatment cylinder and the cylinder is put under a vacuum for a period. This sequence extracts moisture from the wood. Then the ACQ is introduced and pressure is applied, which forces the chemical into the pores of the wood.

M

magnesium - is commonly produced from sea water, which contains magnesium chloride. The first step in the frequently used Dow process is to mix lime (calcium oxide, CaO) with the sea water. The lime reacts with the magnesium chloride to produce magnesium hydroxide and calcium chloride. The magnesium hydroxide precipitates and is filtered from the mixture. It is treated with hydrochloric acid, and the reaction creates magnesium chloride and water. The water is evaporated and the resulting magnesium chloride is melted by heating it to 1310°F (710°C). The next step is electrolysis which converts the molten magnesium chloride into magnesium and chlorine gas. (See 11C10 and Fig. M1.) The magnesium, still in a molten state, is cast into ingots for further processing.

Magnesium, alloyed with copper or aluminum, is used in cast parts for aircraft, lawn mowers, vacuum cleaners and other products where light weight is important.

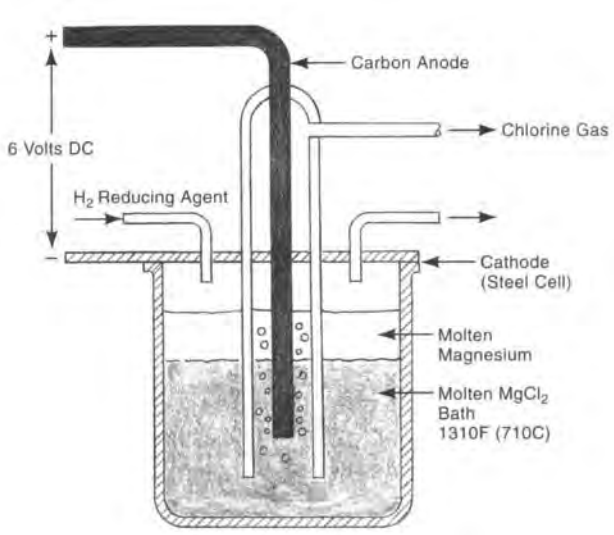

Fig. M1 A schematic illustration of electrolytic refining to produce molten magnesium and chlorine gas from molten magnesium chloride.

magnets - can be made from several materials. There are two basic types of magnets: electromagnets and permanent magnets. Electromagnets obtain their magnetism from current flow in wire coils that surround the magnetic material. The magnetism occurs only when current flows in the coil and the core material is engineered to lose its magnetism when the current stops. Permanent magnets are engineered to retain their magnetism indefinitely and do not require surrounding electrical coils except when they are initially magnetized.

Electromagnets are commonly made from iron and iron alloys. Silicon is one alloying metal. The magnetic core may be made from layers of annealed sheet iron, from powdered iron compressed with a binder into the desired shape, or the core may be cast.

Permanent-magnet materials include various iron alloys, alnico alloys (iron alloyed with aluminum, nickel and cobalt) and a number of ceramic materials. Prominent among them are barium ferrite and strontium ferrite. Others materials are samarium-cobalt and neodymium-iron-boron. The latter makes the strongest permanent magnets. These materials are reduced to a fine powder and are processed into magnets with powder metallurgy techniques (2L1).

The process for making neodymium-iron-boron permanent magnets is as follows:

1. The three metals are melted together in a vacuum and cast into ingots (1D5).
2. The ingots are broken up, crushed (11D1) and pulverized (11D3) in a ball mill into a fine powder.

3. Using powder metallurgy techniques, the powder is compressed in a suitable die to within about 1/8 inch (3 mm) of its final thickness. In one difference from conventional powder metallurgy, the powder is subjected during compaction to a magnetic force in order to align the particles magnetically in the same direction.
4. The "green" workpiece is removed from the die and is sintered (2L1d).
5. The workpiece is heated again to anneal it, remove internal stresses, and thereby strengthen it.
6. The workpiece is machined as necessary (Chapter 3), to bring it to the desired final dimensions.
7. A protective coating is applied.
8. The workpiece, which up to this point is not fully magnetic, is subjected to a very strong magnetic force from a surrounding electromagnet, and the force is held for a period of time. This energizes its permanent magnetic properties in the desired direction.

manganese - occurs in nature in the ores pyrolusite (MgO_2), the principal ore, manganite, and in most iron ores. Manganese is a common alloying metal with steel, and also is alloyed with some non-ferrous metals. For use with steel, ferromanganese is made from manganese ores - that also contain iron - by a smelting process in blast furnaces or electric furnaces. Electrolytic manganese is produced from low-grade ores by an electrochemical process.[2] Another method for producing metallic manganese is to ignite pyrolusite with powdered aluminum. In steel, manganese facilitates hardness and wear resistance. It acts as a deoxidizer in steel making.

maple syrup - is made by concentrating the sap of the maple tree. The sugar maple tree, acer saccharum, has the highest percentage of sugar in its sap, but the sap still must be concentrated to about one fortieth of its volume to produce syrup. The sap is gathered in the early spring when it flows up from the tree roots on warm days. In a typical maple farm, it is obtained from the tree by drilling holes in the trunk and placing spouts called spiles in the holes. Flexible tubing, attached to the spiles, carries the sap to a central processing shed, called the "sugar house". There it is boiled in large covered pans heated by a wood-burning fire or by an oil or gas flame. The water gradually boils off. When the proper degree of evaporation has taken place, the syrup is filtered, usually under pressure, and is bottled.

marbles - are made from glass, both glass made from silica sand and that made from cullet, glass reclaimed from scrap bottles and other scrap material. (See 5A1 - basic glassmaking.) These materials are heated to 2300°F (1260°C) to melt and blend them. Then the molten material is discharged into another container, a flow tank into which glass of a contrasting color is injected. Coloring is added to almost all batches. Iron oxide gives glass a green color; manganese provides purple; cobalt, blue and uranium oxide, chartreuse. Most marbles are made with two colors. The two colors are mixed partially so that there are streaks of both colors in the mix. Cube-shaped gobs of the molten mixture are placed in a shaping machine. In this machine, the cubes of molten glass move between two parallel cylinders that have spiral-oriented slots, similar in appearance to screw threads. As the cylinders rotate, the glass material is rolled in the slots so that, as it moves along the cylinders, it gradually assumes a spherical shape with curved color streaks. When the material has solidified and cooled, inspection takes place, and rejected marbles are returned for remelting. Good marbles roll to a packaging machine where they are packed in bags or boxes.

margarine - is an emulsion of fats and oils in water or milk. Emulsifying agents and other additives may also be used. Equipment similar to that used in butter making is used to churn the mixture.

Cottonseed oil is a common base-material for margarine. The process of making margarine from cottonseeds includes screening (11C8a), cleaning (12A) and delinting the seeds. Delinting is performed with machines similar to cotton gins. The seeds are then split, and the meat and hulls separated by screening and air classification. The meats are rolled into thin flakes. These are cooked for 20 minutes at 230°F (110°C) to open the oil glands, and are then fed to screw presses to express (12E2) the oil. The oil is screened, cooled, and filtered (12E1), and held for further refining. The meat of the seeds is pressed again with hexane solvent and then is subjected to further solvent extraction (12E5). The hexane and oil are separated, and the resulting oil is combined with that from the first expression. Further refining is carried out by degumming the mixture with a small amount of phosphoric acid and processing the mixture by centrifugation (12E3). The liquid is then bleached by adsorption (11C9) using bentonite. Hydrogenation (12J3) follows with a nickel catalyst, after which the product is deodorized, colored, flavored, and churned. Like butter, margarine is cooled, extruded (12J5), cut, wrapped and packaged with automatic machinery.

marking pens, felt tipped - Felt-tipped marking pens differ slightly in design from maker to maker but often consist of seven components: a body, a rear plug for the body, a fiber filler for the pen, a flexible plastic tube to hold the fiber, ink to saturate the fiber, a writing tip, and a cap to fit over the writing tip. The body, rear plug, and cap are injection molded (4C1), normally of polypropylene plastic. The body is printed (9D1b), hot stamped (4M2), or label-wrapped with identifying information. The filler is made from absorbent fibers and is inserted in the extruded (4I1) flexible plastic tube, which is open at both ends. Ink is injected into the fibers with a needle-like injector and the plastic tube helps keep it from drying in the pen. The ink consists of dyes/pigments dissolved in an ethyl-alcohol solvent. However, some highlighting pens use a water-based ink. The tip is made from polyester felt (10E), compressed and bonded tightly with heat in a compression-molding operation (4B1) to form a rigid but porous part. It is then trimmed to an angle for writing. The tube of ink-saturated fiber is inserted in the body from the back end. The writing tip is inserted in the other end of the body and the back cap is pressed into place. Both the back cap and tip fit tightly. The size and fit of these parts insures that the back end of the writing tip always presses against the inked yarn so the ink can flow to the tip by capillary action. All assembly operations are performed on special automatic equipment (7F3b) that assembles them, without human handling, at a rate of about 3500 markers per hour.

matches - are made in special-purpose, highly-automatic equipment. Match sticks are cut from pine or other wood in a series of cutting operations, or are die-cut from paperboard. With wood matches, the initial operations from logs are as described in Chapter 6 (Woodworking), but the final steps in making the sticks are shearing operations. In safety matches, the striking surface is coated with a mixture of ground glass, glue, and red phosphorous. The match heads are coated with antimony sulfide, and contain starches or gums, a glue binder, clay, or diatomaceous earth to regulate the flame. In strike-anywhere matches, the ingredients are all in the match head except for a ground glass friction striking surface. To coat the heads, thousands of matches are dipped at a time and then dried in special machines. Packing in cardboard is the final operation. Friction from striking the match generates heat that starts a reaction between the coatings, creating sufficient heat so that normal combustion of the match can continue.

meat - See 12K.

meat tenderizer - is papain, the dried extract of sap and the fruit of the papaya tree. The sap is dried at a temperature below 158°F (70°C) Because higher temperatures destroy the tenderizing enzymes. The final tenderizers is in either powder or liquid form.

melamine plastic - See *urea and melamine plastic.*

mercury - is derived from the mineral cinnabar, which contains mercuric sulfide, HgS. The mercury is obtained by a distillation process (11C1). The ore is first concentrated by various processes including flotation (11C8b) and screening (11C8a). After concentration, it is heated in the presence of air. The sulfide is converted to sulfur dioxide, and the mercury is freed as a vapor. The mercury vapor is then condensed to produce pure liquid mercury. Mercury is used in mercury vapor lights, in thermometers, in batteries, and in separating gold and silver from their ores. Mercuric sulfide and mercuric oxide are used as red pigments. All mercury compounds are poisonous.

medium density fiberboard - See 6F6.

metal cans - See *cans, metal.*

metal powders - See *powders, metal.*

methane - (CH_4), is the major constituent of natural gas and is retained in the gas when it is used for fuel. Removal of minor unwanted compounds (e.g., water and hydrogen sulfide), and other valuable constituents (propane and butane) from the gas leaves methane. Removal of these other ingredients is achieved by a combination of compression, refrigeration, and adsorption (11C9) operations. Methane is also made by reacting carbon monoxide with hydrogen, by the reaction of water and aluminum carbide (Al_4C_3), or by the destructive distillation (11C1g) of coal. Methane is an important raw material for many plastics, fertilizers, explosives, and various chemicals, including methanol, chloroform, carbon tetrachloride, and carbon black, used in tire making.

microcircuits - See 13K.

microspheres, glass - See 5A7d.

milk, condensed - goes through an evaporation process (12F1) to remove water and increase the solids content. It is usually performed with heat but under a vacuum to reduce the temperature needed. Solids content increases from 8.6% to 45%. In a two-stage process, a temperature of 154°F (68°C) is used in the first evaporator and 115°F (46°) in the second. Condensed milk is used chiefly to replace cream in cooking baked goods, ice cream, cheese and candies. *Evaporated milk* is very similar but usually refers to the product when the milk is heated, concentrated, and sterilized, in individual cans. Sweetened, condensed milk contains sugar which acts as a preservative.

milk, powdered - is produced by spray drying milk (primarily skim milk) in an airstream. (See 12H2.)

milk, skim - Skim milk (now designated in the U.S. as "Fat Free" milk) is whole milk with the cream removed. In production situations, a centrifugal separator is used. (See 12E3 and 11C7e.) The milk is introduced to a bowl that rotates at 6000 to 10,000 rpm, generating centrifugal forces up to 500 times the force of gravity. The bowl contains a series of stacked cones that separate the milk into thin layers. The cream, being lighter, tends to remain in the center and rise to the top of the bowl, while the centrifugal forces drive the heavier skim milk to the periphery and the lower part of the bowl. (See Fig. 11C7e-2.) The milk is usually heated to a temperature of 90°F (32°C) to as high as 160°F (71°C) to facilitate the separation of the two portions.

mineral wool (rock wool) - See5A6d.

mirrors - use flat glass of high quality so that there is no distortion of the reflected image. Float glass (5A3f) or plate glass (5A3e) is used. The pane used is first washed and treated with a stannous chloride solution to activate the glass surface. Then, the back surface is sprayed with a solution consisting of silver nitrate, ammonia, caustic soda or caustic potash, dissolved glucose, and distilled water. This treatment causes a fine crystalline film of solid silver to form on the glass surface. The coating is built up to a thickness of 0.0004 inch (0.01 mm). A similarly-applied coating of copper is added, followed by two coats of lacquer, all for protection of the silver coating. (See 5A5j, metallic coating of glass.)

molybdenum - is made from the minerals molybdenite and wulfenite, and as a by-product from copper refining. Molybdenite, the principal ore, is roasted with air to form molybdenum trioxide (MoO_3). Mixing this with iron oxide and igniting it produces ferro molybdenum, which is used as an alloying agent in steel. Metallic molybdenum can be made as a powder by reacting the trioxide with ammonia to produce ammonium molybdate $(NH_4)_2MoO_4$ and then reducing this with hydrogen. The powder can be formed into useful shapes by powder metallurgy (2L1) techniques, or by arc-melting and casting it in a copper mold. Molybdenum is principally used as an alloying ingredient in steel to provide greater strength, toughness, and corrosion resistance. Applications also include heating elements, electrical contacts, high-temperature aerospace components, and as a flame-resistant coating for other metals[2]. Molybdenum disulfide is a high-pressure, high-temperature, solid lubricant.

monuments - *Commemorative stones* for public areas and *gravestones* are commonly made from granite rock. The manufacturing steps involved are as follows: 1) Stone blocks are removed from the ground by one of two methods: a) explosive charges in deep holes drilled into the rock by diamond drills, or, b) by cutting out blocks of stone using a metal wire coated with diamond abrasive. The wire acts somewhat like a bandsaw against the granite. 2) The stone is then cut into monument stones, close to final size by either a large circular saw coated with diamond abrasive, or by diamond beads on a moving wire. When curved surfaces are needed, the wire traverses a curved path, guided by a template or computer control. 3) The stone workpiece is then polished on the front and back surfaces as required to remove saw marks and provide the desired appearance. This operation is done by large machines with worktables of 20 by 60 to 20 by 100 ft (6 by 18 to 6 by 30 m). A group of stone workpieces, all to be made to the same standard thickness, is placed on the table. An overhead gantry structure, which can move the length of the table, holds a motorized vertical spindle and a disc on which are mounted carborundum (aluminum oxide) or diamond-coated abrasive stones called "shoes". The shoes rub against the stone workpieces, as the gantry moves forward and back, and as the spindle traverses the width of the gantry, so that all surfaces of the monument stones on one side are contacted repeatedly by the shoes. Repeated passes with progressively-finer abrasives are made until the stone achieves the desired thickness and degree of polish. 4) The stones are all turned over and the polishing is repeated for the opposite side. 5) The top surface of the monument is similarly polished if it is flat, and is polished manually with hand-controlled polishing wheels, discs, or belts, if it is curved. (Some monument surfaces are given a rock-like texture by artisans using hand chiseling.) 6) Carving of any images and lettering is done by "sandblasting" the surface with steel shot in the open spaces of a rubber stencil mask that is temporarily glued to the stone surface. (The rubber stencil is made in layers so that wider and deeper sections of the engraving can be made by peeling off part of the mask and sandblasting again.) This operation is partly automatic in that the movement of the stone and the sandblasting nozzle are machine controlled. Deeper carvings may be made by hand by an artisan using a vibrating carbide-tool chisel. 7) After carving, the stone is buffed and washed. 8) Some lettering may be spray painted. 9) The finished monument is crated and shipped to the dealer who installs it at the desired site on a base piece which, in turn, is on the necessary concrete footing. The installation follows a careful, lengthy procedure designed to prevent movement of the stone over a period of time.

motors, electric - Each electric motor, whether used with alternating current (AC) or direct current (DC), consists of an armature (a rotating electrical conductor) or a rotor attached to a central shaft, a stationary magnet or stator, and an air gap - a narrow space - between the rotor and stator. Magnetic effects are achieved either by electromagnets - coils of wire surrounding a stack of laminated sheet steel - or by a permanent-magnet structure. Coils of wire are used in either the armature or stationary field, or both, to create electromagnets. Direct current and universal motors have a commutator - a device to reverse the direction of current when the rotation of the motor armature passes a certain point - and carbon brushes to convey the electric current to the armature. Most AC motors do not have commutators or brushes. Some depend on the regular current reversal to achieve the desired motion. The speed of the motor is then proportional to the frequency of current reversal, and these are synchronous motors. Others for AC are induction motors that have copper bars in slots in the rotor. The bars are connected to rings at the ends. A current is induced in the bars and this produces a magnetic effect in the rotor that reacts with the field magnet, causing the rotor to turn. Fig. M2 illustrates the component parts of a typical universal (AC or DC) motor.

All rotating electric motors have a central shaft that holds the armature or rotor and also holds a pulley, gear, or other means to transfer the motor's rotation and power to other devices. They include bearings for the shaft and an external housing for protection. Almost all have an internal cooling fan. The fan is normally blanked (2C4) and formed (2D2) from sheet stock and is press fitted on the central shaft. The shaft is turned on a screw machine (3A2c) from long lengths of steel bar drawn (2B2) to the proper diameter. Shafts may be milled (3D) to a D-shape or spline, or may be knurled (3A1f) for the necessary torque-handling strength. Bearings are either commercial ball bearings or bronze bushings made by powder metallurgy processes (2L1). The laminations are stamped on high speed blanking presses from thin sheets of a special steel alloy which has desirable magnetic properties.

Commutators for DC and universal motors are cold formed from coiled sheet copper by special blanking and forming press operations. The segments produced are inserted in a mold with the central mandrel. Phenolic plastic is compression molded (4B1) around these inserts to produce the full commutator, which is then machined by turning (3A2 and 3A2d) to provide a smooth surface at the brush contact area. Strips of sheet mica or synthetic insulation may be placed between commutator segments prior to molding. The insulation between the segments is then undercut slightly on special machines to ensure a smooth electrical connection to the brushes. Field coils are wound on coil-winding machines (13L3 and 13L4) on forms of the shape needed to fit the laminations, wrapped with tape at least partially to hold the wires together, and then are assembled to the stack of field laminations. Sheets of vulcanized fiber, or of polyester, are usually placed between the laminations and coils to provide both mechanical protection to the wiring

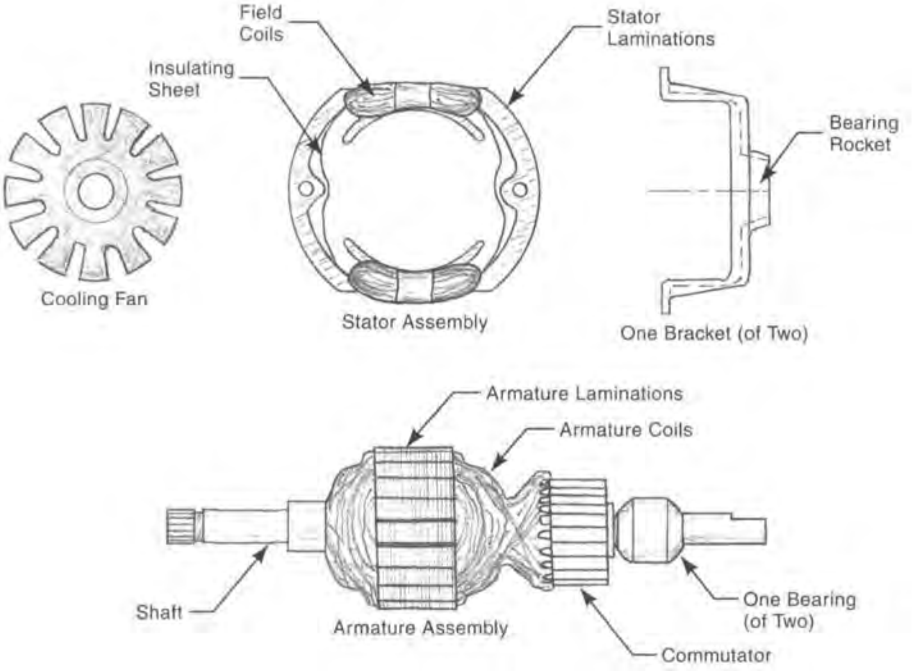

Fig. M2 The principal components of a small universal electric motor (for sewing machines). Two brackets hold the armature assembly in alignment with the stator assembly with a small air-gap between the two. An external plastic or sheet metal housing protects the motor. Only one of the two brackets and two bearings is shown. Also not shown: brushes and brush holders, external wiring, and housing parts.

and electrical insulation. Coils for armatures of DC and universal motors are often wound directly on the armature which, at that stage, has the armature laminations and commutator press fitted on the armature shaft. Small sheets of vulcanized fiber are placed in each slot in the laminations to protect the windings from sharp corners.

Each armature coil wire is connected to the appropriate commutator by crimping and spot welding the connection point. Then the windings are given a thick coating of varnish (usually epoxy) by dipping. The varnish provides supporting strength to the coil against the centrifugal force of rotation, and gives additional protection and insulation. Brushes are pressed and sintered from carbon graphite powder, and are held in square brass sleeves, that are made from strip stock on four-slide machines (2G2). The sleeves provide electrical contact with the brushes. The motor housings are welded assemblies of various blanked and formed sheet steel parts. Brackets and other parts are resistance welded (7C6) to the housing. Sometimes, the housing is deep drawn (2D5b) from steel or die cast (1F) from aluminum. The housing assembly is spray painted (usually electrostatically - 8D7) to the color needed. Some housings are injection molded (4C1) of a thermoplastic resin able to withstand the heat that the motor develops. Modified polyphenylene oxide is one plastic used. When a plastic housing is used, brackets, stamped from sheet steel, are fastened to the field laminations to hold the bearings and rotating parts.

The assembly of motors, particularly the placement of coils, is heavily manual but robotic assembly is employed in some cases. Components attached to the main shaft are normally fastened by press fitting. Electrical connections of the field coils and brush sleeves are usually made by soft soldering (7A). A running test is a final assembly line operation before packing for shipment.

multiple chip packages (electronic) - See 13N1.

musical instruments - See *guitars* and *musical instruments, brass*

musical instruments, brass - include trumpets, cornets, trombones, french horns, baritone horns and tubas, all of which are made from brass with very similar manufacturing methods. (though tubas - Sousaphones - for marching bands are made, in the larger sections, of reinforced plastics for weight reduction.) Except for stainless steel screws, the electroplating of some parts with chromium or nickel alloys, silver, or gold, key finger pads and valve seals, only brass is used in these instruments. Yellow brass (70% copper and 30% zinc) is the most common alloy. Another is gold brass (80% copper, 20% zinc) and a third is silver brass (copper, zinc and nickel). The brass material is supplied to instrument makers in sheet and tubular form. Most production work involves a combination of manual and machine operations. With some instruments, particularly those with special requirements, the operations are highly manual and are performed by skilled artisans. With those made to standard specifications, for example, those instruments intended for beginner or school use, much more use is made of methods involving machines and production tooling. The operations involved for either type include parts making, assembly, final finishing and testing.

Brass tubing for most parts of the instrument is drawn (2B2) to the diameter needed. Tubing that is drawn, however, usually must be annealed (8G5b) and then cleaned by immersion in dilute sulfuric acid to remove surface oxidation that forms during the annealing. Annealing is also required whenever severe working is done on the parts in spinning, flaring, tapering, and other operations. Some tubing pieces must be bent to 45, 90, or 180 degree angles and this bending is done with conventional tube bending equipment, usually with internal ball mandrels to prevent the tubing from collapsing (2H2 and Fig. 2H2a-1) during bending. Some shops use water under a high pressure of 3900 psi (27,000 kPa) instead of a ball mandrel, to prevent the walls from collapsing, and others may fill the tubing with pitch or solder that is melted out after the bending is complete. The bell of the instrument is formed from sheet material in a series of blanking (2C4), forming (2D2), and flaring press operations but, in small artisan shops, may be hammered to the approximate final shape. With either approach, it then undergoes torch brazing (7B2) to fasten the ends together to form a round shape. The edges are overlapped, held in place with a fixture and brazing alloy is introduced to the overlap area. Brass-colored brazing alloys containing silver and phosphorous are used, with the appropriate flux. Some hand hammer-and-anvil shaping takes place before the bell end is given its final form by metal spinning (2F6). Where two ends of tubing are joined, flaring or swaging (2D12) or both are used so that the end of one piece fits into the end of the other. The bead at the open end of the horn is made as part of the spinning operation. A wire is laid inside the bead to facilitate its formation. If the instrument has valves (all do, except trombones), they are made from heavier-walled tubing and are machined to the required dimensions in lathes (3A), as are the valve pistons and finger buttons. Computer-controlled machining (3U2) may be used, especially when rotary valves are involved. Cross holes are drilled in the valve bodies where they join tubular parts. Rotary-tube saws are used as drills, and the parts are held in fixtures during drilling to insure correct location of all holes. Finger rings, hooks, a water-release key, and other smaller parts are usually press formed. Mouthpieces are cast and finish-machined on lathes or made from brass bar stock on screw machines (3A2c) and then either polished or electroplated (8C1), usually with silver but sometimes with gold.

When all parts are completed, the mating surfaces are cleaned with mild abrasive, the parts are inserted in assembly fixtures where they are fastened together by torch brazing (7B2). There may be several stages of assembly where already-brazed subassemblies are joined together, again by brazing. The fully-brazed assembly is then immersed in an acid bath to clean off all scale and residual flux. It then undergoes a complete polishing (8B1) and buffing (8B1a) operation. The entire instrument then is cleaned, final-polished, and either electroplated (with silver or gold) or lacquered. Identification information may be engraved (8I4) or acid etched (8I3) into the surface of the instrument. Then, the final assembly takes place with the mechanical valves, valve pistons and mouthpiece. Lastly, the instrument is tested by a qualified musician and adjusted as necessary. If the test is successful, the instrument is wrapped and packed for shipment to the customer or retail outlet.

N

nail polish - is made from nitrocellulose resins and plasticizers dissolved in an acetone solvent. Dyes and pigments are added for color. Acetone is commonly made by the dehydrogenation of isopropyl alcohol.

nails - are made on special cold heading machines (2I2). Most nails are made from carbon steel, but aluminum, brass, copper, stainless steel, and other alloys may be used. Wire from coils is fed to the machines where it is clamped securely by gripper dies. While the wire is gripped, it is struck on a protruding end by a die with a cavity that forms the nail head. Then, with the wire still gripped, a set of shaped punches strike the wire at another location to form the point of the nail and sever the nail from the wire coil. The grippers then open and the nail is ejected into a chute below. The wire in the coil then advances into the grippers and the operations are repeated to form another nail. This sequence takes place at a rapid rate, as many as 700 times per minute. The formed nails may then be fed into another special machine that forms ribs in the shank of the nail or twists it to provide a spiral shape.

Many varieties of finishing operations then take place, depending on the intended application of the nails. Most are first fed into a tumbling barrel for alkali cleaning to remove the forming lubricant and any small pieces of metal left from the forming of the point. Other nails are galvanized (8F2), or are barrel electroplated (8C3) with zinc or another metal. Some nails are painted to provide a matching color for their application. Others are heated to provide a blue color and some corrosion protection. Still others are coated with a plastic for corrosion protection and the plastic may contain ceramic powder to improve the nail's holding power. Nails intended for masonry uses are heat treated to increase their hardness (8G3c).

All nails are packaged automatically with the quantity controlled by weight. Some go into small boxes that hold a few ounces, or into other boxes of 1, 5, or 10 pounds each.

nameplates - See 8I12, 8I2, 8I4, 8I4a, 8I5, 8I7 and other items under 8I (Product Marking).

naphtha - See 11H1a and 11H2a1.

napkins, paper - See 9C4 and 9B5.

napped fabrics - See 10F3a

natural gas[4] - is recovered from underground and undersea deposits through oil and gas wells. The gas is formed from the decomposition of marine plankton and other organic matter, and from geologic changes over millions of years that cause it to be held underground. It accumulates in pockets, and often accompanies crude oil which is formed from the same or similar organic matter. Its major constituent is methane (CH_4).

Before distribution, natural gas may be treated to condense some of the less-volatile hydrocarbons it may contain, notably propane and butane. These are used for liquified petroleum gas or other products. The remaining gas is purified to remove water and hydrogen sulfide, which are incompatible with pipeline transmission. Carbon dioxide is also removed, because it lowers the heating value of the gas. Water causes corrosion and operating problems with valves and regulators and the formation of unwanted hydrates. Sulfur compounds also cause corrosion and undesirable odors, and air pollution when the gas is used. Water is removed by compression or refrigeration, which cause contained moisture to condense, by adsorption, or by treatment with drying materials. Refrigeration is less used because is usually more expensive. When drying substances are employed, glycols are predominant because of their good drying characteristics and freedom from reaction with, or absorption of, the gas. Silica gel, activated alumina, and other drying agents can also be used. When this type of drying is employed, the equipment used regenerates the drying agent periodically. Hydrogen sulfide and carbon dioxide are removed with a variety of processes that use reagents or solvents. The most common process uses monoethanolamine to absorb the hydrogen sulfide.

The processed gas may be liquified for tanker transportation, or may be transported as a gas in pipelines.

natural rubber - See 4O1.

needlepoint carpets - See 10I8.

needlepunch carpets - See 10I4.

neon signs - are made from glass tubing, filled with neon or argon gas, and subjected to a high voltage/low amperage current, which causes the gas to glow. The fabrication sequence is as follows: Straight glass tubing is heated, where the bends are to take place, to a temperature of 1100 to 1400°F (600 to 760°C) which softens it sufficiently for hand bending. Mild air pressure in the tube prevents it from collapsing during bending. The glass is bent to match the curvature desired in the sign lettering. A full-size template drawing is usually used to guide the placement and angle of the bends. Once a series of bends has been made, electrodes are welded to the ends of the tubing and a small tube is welded to one end. The small tube is connected to a vacuum pump and the air in the tubing is evacuated. A 25,000 volt charge is applied to the electrodes. This creates a white glow in the tube and, more importantly, burns out impurities in the tubing. Neon or argon gas is then introduced to the tubing and the small filler tube is closed. The colors of the sign are controlled by choosing colored glass tubing, and by the selection of either neon or argon gas. Neon is used when the desired color of the sign is red, pink or orange. Argon is used for blue, greens, or whites. Portions of the tube not wanted in the sign lettering are painted an opaque black. Operation of the sign involves application of potentials of 2000 to 5000 volts at low current levels, from a suitable power supply.

neoprene - See 4O2.

newspapers - are printed on a special type of low-cost paper, *newsprint* (9B and 9C2). Before printing takes place, considerable preparation and composition work is needed. Each news story is written by a reporter on a computer. The story, and all other articles with their accompanying illustrations, captions, and headlines, stay in digital electronic form throughout the editorial and composing steps until printing plates are prepared. The data are moved within the paper's offices, and to the printing plant, on a local area network. The story is first reviewed and often modified by a city-desk editor, and then by the paper's news editor. Stories that originate out-of-town from news services arrive at the paper in digital form, by wire. The news editor decides which stories to run in the paper, where they will appear in the paper, what kind of headline should be used, the size of type, the final length, and other details. A make-up editor prints a copy of the story and inserts it into a "dummy" copy of the page, including pictures, tables, headings, advertisements, etc. When this is approved by the editor on duty, it is still in digital form, but is ready for the printing process.

The page is then printed on plastic film by laser. Scanned pictures are included. There may be two stages of plastic film, but the final version includes several pages and is converted into a negative that is used to prepare the final printing plates. Most current newspaper printing is by the offset litho-graphy process (9D2 and 9D2a). Some newspapers use flexographic letterpress printing (9D1a1 and 9D1b).

Newspaper printing takes place on extremely large, rotary web-printing machines. Paper is fed to the presses from large continuous rolls, and as many as eight copies may be printed simultaneously (9D6). Both sides of the paper are printed simultaneously with color utilized for some pictures and type (9D7 and Fig. 9D2a). Equipment is included to cut and fold the pages automatically, as part of the printing line. Speeds are as high as 60,000 copies per hour.

newsprint - See 9C2

nickel - is most commonly made from pentlandite and nickel-bearing pyrrhotite sulfide ores. The ores are first crushed (11D1) and pulverized (11D3) and separated from gangue by flotation (11C8b). The concentrated ore is then smelted to produce a matte (an impure mixture of sulfides) of copper and nickel. In the electrolytic process for separating the two metals, electrolysis first removes the copper; then, with a different electrolyte and voltage, metallic nickel is deposited. In another process (the Mond process), the matte is dissolved in dilute sulfuric acid, removing the copper and leaving impure metallic nickel. The impure nickel is subjected to a carbon monoxide atmosphere, which converts it to nickel carbonyl gas. This gas is heated to 392°F (200°C) where it decomposes, depositing pure nickel. Nickel is used in alloys with steel, notably stainless steel, in Monel copper/nickel alloys, in Inconel and Hastelloy temperature and corrosion resistant alloys, for electroplating and in coinage.

nitrile rubber - See 4O2.

nitrogen - is a common element which, in gaseous form, makes up 78% of the volume of the earth's atmosphere. For commercial use, it is obtained from the fractional distillation of liquid air. Membrane separation (11C7c) is another process used. The boiling point of nitrogen is −320°F (−196°C) sufficiently below the −297°F (−183°C) boiling point of oxygen so that, in fractional distillation, it distills off first and is collected. (See 11C1 and *oxygen.*) Nitrogen gas is used in many chemical processes, where its inert properties are needed. These include its use in shielding gas in welding and brazing, for foaming plastics and rubber, as a diluent for reactive gases, to prevent oxidation during chemical reactions and to prevent explosions and fire. Nitrogen is also used in the manufacture of ammonia gas. Non-gaseous applications include nitric acid, fertilizers, explosives and many organic compounds. Liquid nitrogen is used as a cryogenic refrigerant.

no-clean solder flux - See 13G.

non-woven fabric - See 10E.

nuclear power - See *electricity* and Fig. E1.

numerical controls - See 3U and 3U1.

nutmeg - See *spices.*

nuts, screw - Standard commercial nuts are made on special machines, cold nut formers. Low-carbon steel wire in coils, either round, or drawn to a hexagonal shape, is fed to the machines. A shearing die cuts off a workpiece from the wire, and it is positioned in a holding die on a rotary indexing table. A series of press strokes by different punches, as the table rotates, flattens the workpiece, forms the hexagonal shape as necessary, chamfers the two sides, preforms a chamfer for a center hole, punches the center hole, and then burnishes it with another punch to control the diameter and surface finish. (The diameter is held to +/− 0.0005 in (0.013 mm) to insure a proper thread.) The nut blanks are then discharged from the forming machine. They are tumbled with media, cleaned and fed, via a vibratory feeder, to either a tapping or thread-forming machine. Following tapping, the nuts are normally barrel plated with zinc.

nylon - Nylons are a family of plastics composed of *polyamides* of high molecular weight. The common nylon 6,6 is made from the polymerization reaction of adipic acid and hexamethylene. (Adipic acid is made from a two-step oxidation, from air, of cyclohexane. Hexamethylene is made from butadiene or acrylonitrile.[4]) Nylon 6 is similar in manufacturing and properties to nylon 6,6. Nylon 6 is made from caprolactam, the molecules of which join together by self-condensation to form polycaproamide,[3] or nylon 6.

Nylon is used to make yarn by extrusion through spinnerets to make fine filaments that are gathered and spun together, cold drawn to a smaller diameter, and wound on bobbins. The yarn is especially strong and is used extensively in carpets, hosiery and other wearing apparel, parachutes, auto air bags, and tire cords. Coarser mono-filaments are used for fishing lines, insect screening, tennis rackets, brushes and weed trimmer cord. Nylon is also used extensively for injection-molded parts including: gears, bearings, anti-friction or high temperature machine components, painted exterior auto body parts, and combs. Fig. N1 shows the operation sequence for making nylon resin.

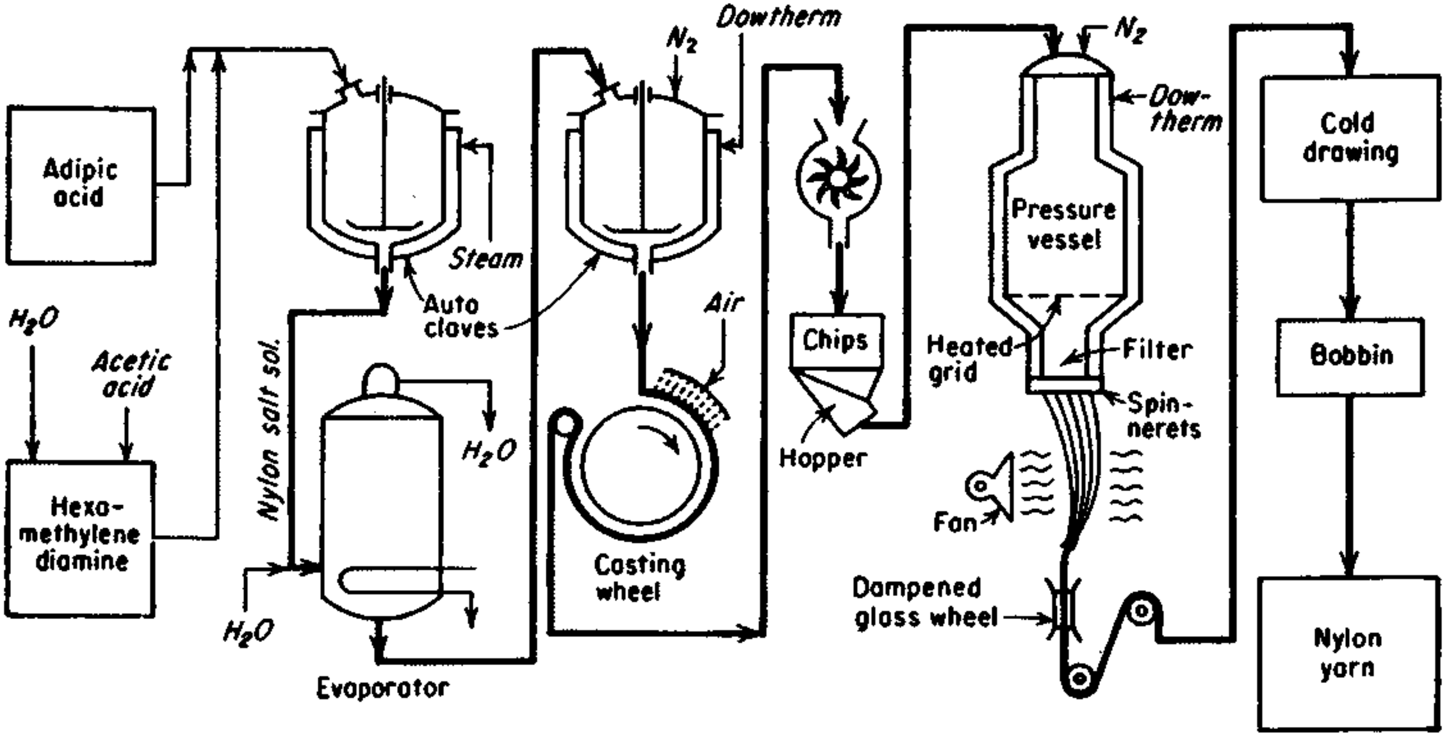

Fig. N1 The sequence of operations involved in making nylon yarn. (*from Shreve's Chemical Process Industries, 5th ed., G.T. Austin, McGraw-Hill, 1984. Used with permission.*)

O

oils, edible - include olive, corn, palm, coconut, peanut, safflower, canola, cottonseed, and soybean oils, and others of vegetable origin. Edible oils and fats of animal origin include cod liver oil, shark liver oil, and other fish oils, lard, and butter. Almost all vegetable oils are obtained by solvent extraction (11C3) or expression (11C4). (Cottonseed and safflower seeds are processed with both methods.) Palm oil is removed by rendering: boiling the fruits in water; the oil rises to the surface. Expressed oils usually are filtered to remove particulate matter. Oils are usually further refined to put them in better condition for use. Treatments may include centrifugation (12E3 & 11C7e) after phosphoric acid treatment to remove gummy material, bleaching by adsorption (11C9), and deodorization with steam. Oils may be hydrogenated (12J3) to make them less liquid and to greatly reduce the possibility of deterioration in storage.

Animal fats are removed from carcasses by several methods including rendering or cooking in water, followed by decanting the oil, which rises to the top. Centrifuging, filtering and bleaching may also be used. (Also see *butter.*)

Fig. O1 illustrates the operation sequence for production of a typical edible oil from seeds.

oils, essential - Essential oils are those, contained in odoriferous plants, that are used for aromas and flavorings. They are utilized to provide a pleasant odor in cosmetics, soap, perfumes, and detergents. These oils are also used to provide flavor to baked products, confections, meats, pickles, soft drinks, candy, and medicines. Common essential oils are wintergreen, peppermint, cinnamon, rose, camphor, turpentine, birch, anise, clove, sage, and nutmeg. Essential oils occur as very small droplets in the cells of plants. They are most commonly extracted from the plant using *steam distillation* (11C1e). *Extraction* (11C3), using volatile fats, is employed to obtain aromatic essential oils from flowers for perfume and cosmetic fragrances. The process is sometimes carried out with cold fat placed in contact with the flower petals. The fat, after 1 to 3 days, absorbs the flower oil and its fragrance. This approach is called *enfluerage*. *Expression* (11C4), a method that presses the plant to force out the oils, is used to remove them from the skins of citrus fruit. The oil is then separated from accompanying water and solid plant particles by filtering (12E1 and 11C7a), decanting, and/or centrifuging (11C7e).

oil, fuel (furnace oil) - is one of the products of fractional distillation of crude oil (11H1a) and the further vacuum distillation (11H1b) of the heavier residues of fractional distillation. Fuel oil is the residue of these processes, a relatively heavy product, and one that is more costly to refine into higher-valued lighter products such as gasoline, kerosene, and diesel oil. Fuel oil is made by blending various fractions of these distillations to achieve the required viscosity for handling, and the desired flash point. Applications are the heating of buildings, and fuel for diesel engines, ships, and industrial plants.

oil, lubricating[4] - is made from the heavy distillates of petroleum processing. Solvent extraction (11H1d) is used frequently to remove unwanted compounds. Asphalts may be removed with propane. Blending (11H3c) with other fractions is employed for some applications. A series of additives may be mixed with the oil. These include detergents, anti-foam agents, antioxidants, viscosity-index improvers, extreme-pressure agents, and anti-scuff agents.

oils, vegetable - See *oils, edible; olive oil; oils, essential.*

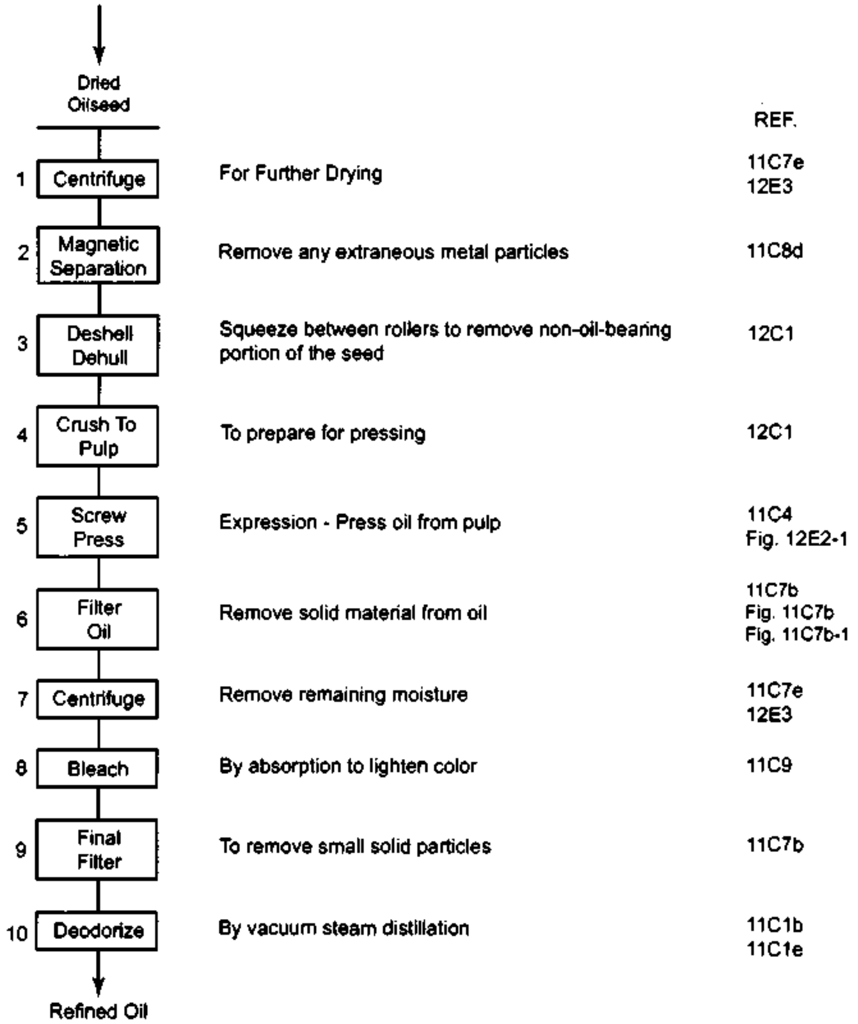

Fig. O1 The sequence of the major operations in the production of edible oil from oilseeds[1].

olive oil - The olives, when ripe, are picked by hand or by machine. Whole olives, with pits, are crushed in a machine that strikes them with metal hammers. The brown paste that results is spread on woven nylon mats. The mats are stacked and the stack is squeezed in a hydraulic press at pressures of approximately 6000 lbf/in^2 (40 MPa). Water and oil flow from the press and are collected and centrifuged (11C7e) to separate the two. The oil is then bottled. Oil from the first pressings that meets standards is classified as virgin olive oil. Oil from later pressings may be classified as "pure" or "edible". Still later pressings provide oil that is processed to remove acidity, odor, and color.

olives, green - Olives, for eating, are harvested when they have reached full size but before they are fully ripe. They are processed by soaking for 9 to 12 hours in a dilute solution of sodium hydroxide (NaoH) that reduces the bitter flavor. (A small amount of the flavor is allowed to remain to provide the characteristic taste.) The olives are rinsed thoroughly and soaked for about 24 hours in fresh water to remove the sodium hydroxide solution. Salt, applied after rinsing in a brine solution, also removes some of the natural bitterness, acts as a preservative and provides the salty flavor.

optical glass fibers - See 5A6, 5A6e and 5a6f.

optical lenses - See *lenses.*

orange juice - Most American orange juice comes from Florida. The common supermarket container of orange juice has undergone the following production steps: 1) Oranges ripen on the tree. Samples are taken and tested for acid/sugar ratio. 2) If ready, oranges are picked from the tree, usually by hand. 3) Oranges are dumped into trucks and transported to the juice factory. 4) The truckload is weighed and a sample is tested for juice content and other attributes. 5) Oranges are classified according to the test results, and are placed in temporary storage. 6) Several lots of oranges are selected for processing together, to provide the juice properties desired. 7) The oranges are washed automatically. 8) They are graded and substandard oranges are removed. 9) They are put in automatic equipment that peels the oranges, extracts the core, and squeezes the juice from the fruit and oil from the peels. The juice, at this point, has a high pulp content. 10) The juice is screened to remove seeds and pulp. 11) Not-from-concentrate juice is pasteurized, chilled and placed in storage tanks for later packaging. Juice to be concentrated is run through vacuum equipment that evaporates most of the water it contains. 12) Concentrated juice is frozen at about 0°F (–18°C) and stored at 18°F (–8°C). 13) Frozen concentrate from several tanks is thawed and blended; oils and essences removed in earlier processing are added back to enhance flavor. 14) The concentrate blend may be packed into cans and sold as frozen concentrate or mixed with water and packed into cardboard containers for sale.

oriented strand board (OSB) - See 6F4.

o-rings - are toroidal-shaped sealing rings, molded from synthetic rubber or other polymers and used as seals in various fluid-handling systems. Common o-ring materials are buna-N, neoprene, polyurethane, EDPM (ethylene propylene), silicone, Teflon® and Viton®. O-rings are most commonly compression or injection molded, but large sizes may be made by splicing the ends of extruded rods or tubing. Sometimes, ring-shaped seals with a square, rather than round, cross-section are made by cutting off extruded tubing into rings. Molded o-rings are normally tumbled at low temperature, after molding, to remove mold flash. The operation is carried out with the aid of liquid or solid carbon dioxide as a refrigerant. The choice of o-ring material depends on the temperature and pressure of the working environment and the nature of the fluids that will contact the seal. Typical o-ring applications include seals in valves, faucets, pipe flanges, compressors, engines, and tube fittings.

Orlon - is a synthetic fiber, somewhat similar in feel to wool. It is made from polymerized acrylonitrile. Orlon is made into garments and filters. See *acrylic plastic* and manufacture of synthetic fibers (10A2).

oxygen[4] - is obtained from the compression and rectification of air. The air is filtered and compressed in centrifugal compressors to about 75 psi (520 kPa). It is cooled moderately to enable moisture to be removed and is further cooled to near the dew point. Moisture is deposited on the walls of the heat exchanger and freezes. As the temperature goes still lower, carbon dioxide gas in the air also is deposited on the walls of the heat exchanger as dry ice. The chilled air, still in the gaseous state, passes through a fixed-bed adsorption unit, which removes any remaining carbon dioxide and any hydrocarbons which it may have held. The air is then fed to a double-column rectifier. This is a two-column fractional distillation device (11C1a.) which separates the air into a low-purity stream of nitrogen that exits the upper column at the top, and a stream of oxygen vapor that exits from the main part of the apparatus. The rectifier includes silica gel adsorption traps that remove carbon dioxide and hydrocarbons from the oxygen as it circulates in the apparatus. Oxygen leaves the rectifier at 99.5% purity. Another manufacturing method involves electrolysis (11C10) of water. Oxygen is used in metal cutting and welding, and in chemical processes in the steel, cement, petrochemical, paper, and glass industries.

P

packages, blister - are made by thermoforming thermoplastic sheet. Several thermoforming processes, as outlined in 4D, are available, but straight vacuum forming (4D1) is the most common method for making blister packages. The plastic sheets may be formed over the product but, more often, are formed from tooling that duplicates the product's shape. In high production systems, special machines, using rotary index tables, are employed. The tables include mechanisms around the periphery that cut off and form the plastic sheet, cut off the preprinted paperboard base, assemble the product to the board and the clear sheet, and wrap the sheet around the board or seal it to the board, all done automatically.

paint[4] - Though the ingredients in present-day paints are usually the products of chemical processes, the final paint preparation is purely a mechanical operation. The ingredients used depend on the type of paint involved, for example whether it is oil-, water- or solvent-based. However, the demarcation that previously existed between lacquers and oil paints no longer exists because of more complex formulations. Paints dry by oxidation or polymerization of the oil or resin they contain, or by evaporation of the solvent vehicle. Each of these reactions can take place at either room or elevated temperatures. The preparation/mixing sequence for a typical paint is shown in Fig. P1 and can be described as follows: 1) accurate quantities of pigments and vehicles (oil, solvent, or water) are fed into a feed container. Quantities of each are controlled by weighing the mixture. 2) The mixture is piped to a mixing vessel where it is thoroughly mixed by a machine similar to those used for mixing dough. 3) The mixture is fed into grinding equipment which may consist of ball mills, roll mixers, high-speed dispensers or a combination of these. Solid particles are reduced in size and thoroughly dispersed. 4) The ground mixture is fed to a tinting

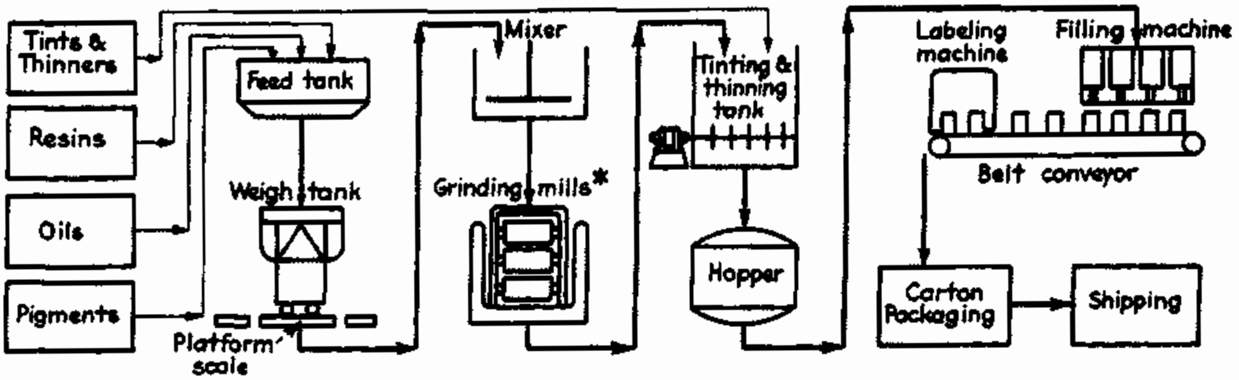

Fig. P1 The operation sequence for paint making. (*Shreve's Chemical Process Industries, 5th ed., G.T. Austin, McGraw-Hill, New York, 1984. Used with permission.*)

and thinning tank, where the color and viscosity are adjusted. 5) The mixture is strained as it leaves the grinding tank and fed to either a holding tank or the feed tank of a filling machine. 6) Cans are filled and closed. 7) labels are applied and cans are packed in cartons for storage and/or shipping.

paint brushes - See *brushes*.

paint removers (paint strippers)[24,6] - are primarily made from strong hydrocarbon solvents, but aqueous caustic solutions are also used. All ingredients in paint removers are hazardous in some respect. The formulation of removers from different suppliers varies considerably. Hydrocarbon solvent paint removers usually are made from one or more of the following: methylene chloride, acetone, methanol, toluene, n-methyl pyrrolidine, and di-basic esters. Methylene chloride is a strong paint stripper and an important ingredient, but is toxic. It is made by reacting methanol with hydrogen chloride to make chloromethane, and then reacting the chloromethane with chlorine. Its most common use is in a formulation with methanol. Another common paint remover formulation includes methylene chloride, toluene, acetone, and methanol.

Caustic solutions of sodium hydroxide (caustic soda or lye) alone, or with ammonium hydroxide (ammonia), are powerful paint removers but are little used in furniture refinishing because they stain wood, change it to wood pulp, and break down some wood glues. Some solvent paint removers have added caustic (usually ammonia), to increase their strength, particularly against tough epoxy or polyester paints.

pallets, plastic - are molded from structural foam plastics (4C3). Low-pressure injection molding (4C3a) is often used. Another method used is dual-sheet forming (twin-sheet forming) (4D13) of high-density polyethylene.

pallets, wood - are made from the less-expensive, lower grades of hardwood lumber that, because of irregularities, discoloration, knots, or being a less desirable species, is not marketable for cabinetwork. However, almost any species may be used. Many pieces are made from the cores of logs, after more desirable boards have been cut. Beech, birch, maple, oak, aspen, and ash are among the Pennsylvania hardwoods that are used. Some softwood pieces may also be utilized. Component pieces are saw-cut to size but are not planed. Pneumatic nailers or staplers are used for fastening.

pans, cooking - See cooking utensils.

paper - See 9A and 9B.

paperboard - has been defined as paper thicker than 0.012 in (0.3 mm) and heavier than 0.66 oz/ft^2 (200 g/M^2). See 9C3.

paper, bond - See 9B and 9C1.

paper clips - are made on four-slide machines (2G2) or special machines similar to them. Wire in coil form is fed to the machines, which cut and bend the wire into the shape of the paper clips at a rate of hundreds of finished clips per minute.

paper handkerchiefs - See 9C4.

paper, kraft - See 9B, 9B2b2, and 9C5.

paper money - is printed by the intaglio (gravure) method (9D3a). Master plates for printing are hand engraved, because hand engraving with fine and coarse dots, dashes, and lines, is more difficult to counterfeit than a computer-generated engraving. Hand engraving master plates is a lengthy, painstaking process. Over 1000 man-hours are required for completion of the master engraving for any one note. The master engraving is hardened and used to make production plates. The hardened engraving is pressed into a soft transfer roll which, when hardened, becomes a master die for making production printing plates. The production plates are assembled in multiples of 32 so that 32 notes are printed with each impression. Sheet-fed rotary presses are used, with output rates of over 8000 sheets per hour. Sheets are inspected and, if satisfactory, are overprinted by letterpress (9D2) with a serial number, the Federal Reserve District seal, and number. Both black and green ink are used. The sheets are cut into individual notes that are collected into stacks of 100 notes, of which 40 are bundled together into "bricks" of 4000 notes. The paper used consists of 25% linen and 75% cotton fibers. Red and blue plastic fibers of various lengths are distributed in the paper as a further protection against counterfeiting.

paper, rag (rag bond) - See 9B and 9B3.

paper, sanitary - See 9B and 9C4.

paper towels - See 9C4.

particle board - See 6F5.

partition glass - See 5A3g.

pasta - is traditionally made from semolina, the flour of durum wheat. [See roll crushing (12C1) and milling (12C5) of grain.] The semolina is mixed with warm water and is kneaded until it becomes a stiff, smooth, dough. The dough is extruded into various shapes, the particular shape being controlled by that of the openings of the extrusion die. Round, string-like shapes make spaghetti or vermicelli, flat shapes make linguini or lasagna, and tubular shapes make macaroni. After extrusion, the material may be further formed into shapes such as shells (conchiglie), twists (rotini), butterflies (farfalle), bent tubes (elbow macaroni), and curls (ricciolini). The dough may also include eggs or juices to provide flavor and coloring (green from spinach juice, red from beet juice). The dough may be rolled and cut instead of extruded. After the pasta shape is made, the dough is slowly dried to reduce its moisture content to about 12 percent, in which condition it can be stored at length without loss of quality. Asian pastas, usually referred to as noodles, are made from other wheat, rice, mung beans, or parts of other plants.

patterns for casting - See 1B7.

peanut butter - is made by grinding the seed kernels of peanuts. Peanuts are harvested, dried and shelled. They are separated from any soil or stones and are roasted (12G6). After roasting, blanching machines (12G1) remove the reddish-brown skins from the kernels. Off-color or un-skinned kernels are sorted out automatically. The peanuts, sugar, salt, and partially-hydrogenated vegetable oil (12J3)(for stabilizing and extending the mixture), are fed to a mixing and grinding mill (12D). The mill grinds the peanuts and mixes them with the other ingredients to a smooth consistency. The peanut butter is then piped to an automatic filling machine that feeds a measured amount into jars on rotary tables (12M), places and tightens a cap, and moves the jars to another rotary table where labels are attached and code numbers are ink-jet printed. The jars are collected in multiples of 12 or 24, placed on trays and stretch wrapped, or put into shipping containers. Trays or containers are stacked on pallets, stretch wrapped again, and are ready for shipment.

pencils, lead - do not contain lead. The lead in a lead pencil is a blend of graphite and clay. (The greater the graphite content, the softer the pencil lead and the darker the imprint from the pencil.) The graphite and clay are mixed with water to form a paste that is extruded into thin rods. These are cut to length, straightened and kiln dried. They are then dipped into molten wax to provide a lubricant coating. Standard pencils are made from cedar or another softwood that provides ease of sharpening of the pencil. The wood is cut into strips of 1/8 inch thickness and pencil length. Several half-round grooves are machined in the strips by special machines, the number of grooves depending on the strip width. The leads are placed in these grooves and another similar strip is glued to the top, enclosing the leads. The strips are cut into narrower strips, each containing one lead. These smaller strips are then machined, usually to a hexagonal shape, with another special machine. The pencils are painted, printed with the manufacturer's name, brand, and type identification. They are lathe turned at one end to fit a ferrule formed from brass tubing, which is assembled along with an eraser, and crimped to hold the eraser in place. The opposite end of the pencil is cut to a square face. These operations are all performed by automatic machines with no manual handling of individual pencils.

pens, ball point - See *ballpoint pens.*

pepper - See *spices.*

perfume - consists of a blend of fragrant oils dissolved in highly-refined ethyl alcohol with some water. (The alcohol is first deodorized.) Perfumes contain 22 or greater percent fragrant oils and 78 or less percent alcohol. Eau de parfum, eau de toilette, and eau de cologne each contain a progressively lesser portion of oil and a greater portion of alcohol. Oils are of two basic types: 1) those containing fragrances originating from plants, particularly flower petals, and 2), those from animal sources. Now, many ingredients are synthetic. Synthetic chemical fragrances reproduce or imitate the odor of the natural substances but not their chemical composition. Plant fragrances may come from the leaves, bark, wood, roots, fruit, and resins as well as the flower blossoms. Two common flower blossoms used for perfume are night blooming jasmine and May rose. It takes 800 lbs (360 Kg) of rose blossoms or 2500 jasmine flowers to make a pound (450 gr) of concentrate. Flower picking is a hand operation. Odors are extracted from blossoms with solvents (11H1d) and distillation (11C1) or by the ancient French method called "enfleurage", where the fragrances are absorbed by trays of fat. Animal-sourced ingredients include musk - from a deer, similar substances from musk-ox, muskrat, and Florida alligator, civet - a secretion from the glands of a civet cat, castor from beavers, and ambergris from spermaceti whales. Animal-sourced ingredients are important in the final product. They are fixatives, liquids of less volatility, providing a permanence to the more fleeting vegetable odors. Fixatives may be of synthetic or vegetable sources as well as from animals. They may or may not add to the odor of the perfume but must blend with it. Typical perfumes consist of a blending of several or many fragrant oils in the alcohol solution. The finished perfume is aged for up to a year to provide a harmonious and stable blend. The aging process cannot be shortened without a loss of quality.

permanent press fabrics - See 10F5b.

pesticides - See *insecticides.*

petrochemicals - See 11H.

petroleum - the heavy flammable liquid found in underground and undersea deposits. Its refinement into useful products is covered in section 11H.

petroleum jelly (petrolatum, Vaseline) - is a product of the fractional distillation of petroleum (11H1a), distilling from the petroleum at 577°F (303°C).[2] It is a greasy semi-solid, clear or slightly yellow in color. It is used as a base of salves, ointments and cosmetics, as a lubricant, and in rubber compounding.

pewter - traditionally, was an alloy of tin and lead. Ancient Roman pewter had 70% tin and 30% lead. The percentage of various ingredients has varied considerably since then. From the 14th century in Europe, pewter was used for plates, bowls, drinking vessels and church chalices. 16th century pewter had as much as 90% tin. Current pewter is largely Britannia metal, an alloy of 89% tin, 7.5% antimony, and 3.5% copper. It has the easy workability and castability of lead-containing pewter, but retains a bright sheen if polished, compared to the lead-bearing variety that takes on a dull, dark-gray patina over time. Britannia metal is also stronger and safer to use with food.

phenolic plastics - are made from the reaction of formaldehyde and phenol, condensation-polymerized (4A2b) with an acid catalyst. In one process, the resole process, an excess of formaldehyde is used with a water solution base catalyst, and the reaction is stopped just after crosslinking occurs. This allows for further crosslinking during molding of the material. In the novolac process, insufficient formaldehyde is used in the polymerization reaction but this is compensated for by blending in compounds that decompose to provide formaldehyde when the compound is heated during a molding operation. When they are to be used as molding compounds, phenolics are filled with wood flour, mineral powders, glass fibers, paper, or chopped fabric. Phenolics are thermosetting and are widely used in compression, transfer, and injection molding to make commercial parts, especially those used in electrical outlets, handles for appliances and pots and pans, switches, as commutator insulation in motors, and for other electrical uses.

photographic film - See *film, photographic.*

pickles - See 12J.

pig iron - an intermediate material between iron ore and steel, is produced in blast furnaces. See *iron* and Fig. I2.

pile rugs (tufted rugs) - See 10I2.

pipe, plastic - See *tubing, plastic.*

pipe and tubing, metal - Formed metal pipe and tubing may be either seamless or welded, and may be made from various metals. Steel is perhaps the most common, but copper is used for much water piping, and other metals are used in various applications. Several methods are usable for pipe and tubing manufacture: 1) Seamless metal pipe and tubing often starts with a round hollow extrusion (2A3) that is drawn (2B2) repeatedly until the desired diameter is achieved. 2) Another process uses the hot piercing method (2A5), which pierces a heated and softened round rod axially with a pointed tool as it is pressure rolled circumferentially, converting the rod to a length of hollow tubing. This also is drawn until the desired diameter is achieved. 3) Hot drawing or cupping (2A2), is another method used to make pipe or tubing. In all these methods, the internal diameter of the blank before drawing is controlled to produce the desired internal diameter after drawing as closely as possible, and drawing is done with a mandrel to control the internal diameter. Fig. 2B2, view b, illustrates this operation. 4) Butt welded pipe and tubing is made by contour roll forming (2F7a) a strip of sheet metal (a *skelp*), into a round tubular shape, and resistance welding the butt joint where the edges come together. Fig. P2, view a, illustrates this. 5) Another method of welding pipe, forge seam welding (7C13b), uses a scarfed joint under pressure to achieve welding. Welding takes place when the tubing is red hot and is fed between external form rollers and an internal mandrel to apply pressure to the joint. View b of Fig. P2 shows this method. (Also see 2A6.) 6) Still other methods use arc welding (7C1), induction welding (7C2) or flash welding (7C10) to join the edges after the skelp has been formed to a tubular shape. Fig. P2, view c, illustrates arc welding. For cast metal pipe, see 1E1.

pipe, cast - See 1E1.

pipe, welded - See *pipe and tubing, metal* above.

plaster - See *gypsum plaster.*

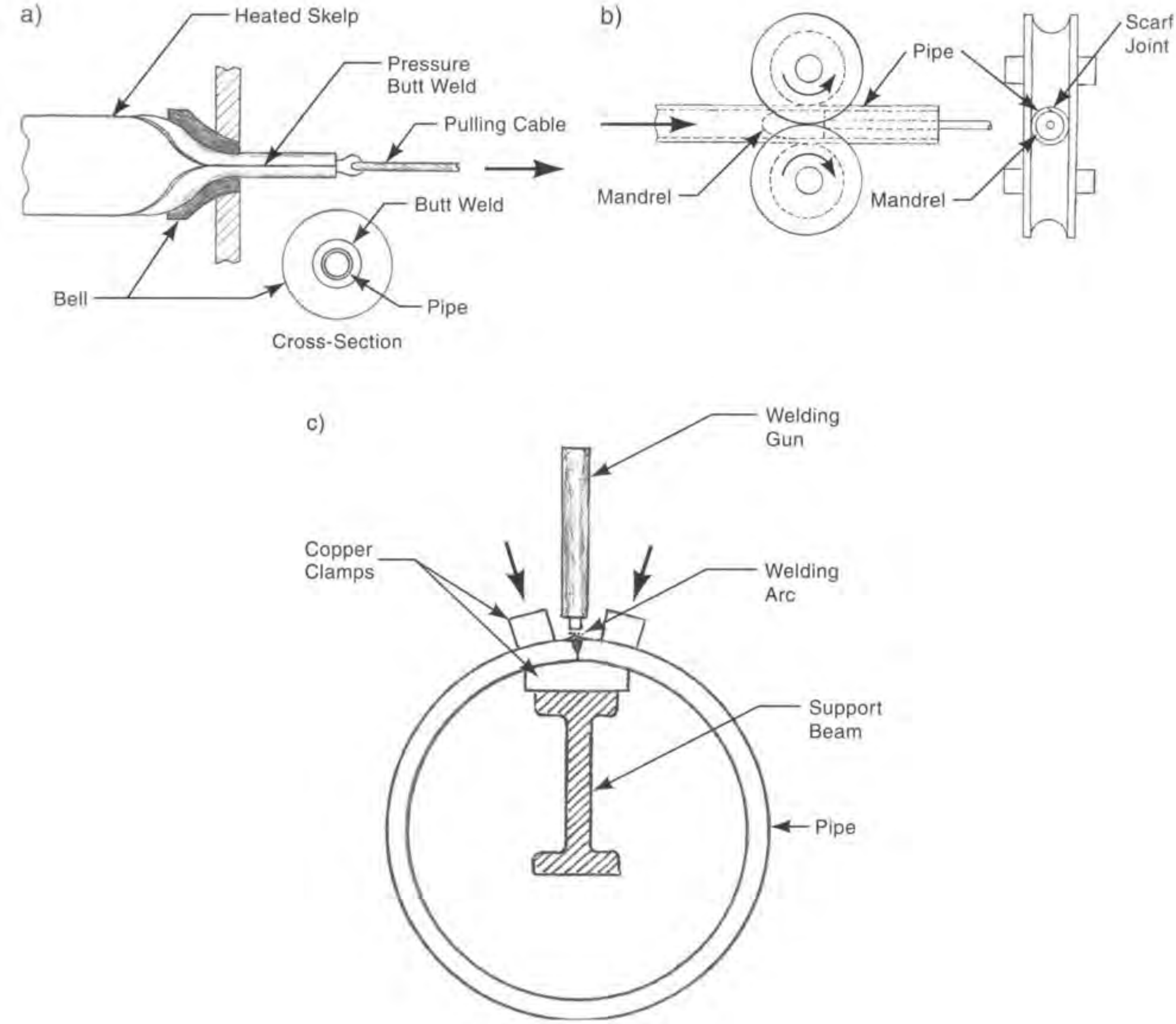

Fig. P2 Schematic illustrations of pipe welding methods. a) pipe with a butt-welded seam being made from strip material. b) forge welding. The pipe fed to the machine is red hot and the rollers and mandrel apply pressure to the scarf joint, causing the edges to fuse together. c) arc welding of a large-diameter pipe.

plasterboard, gypsum board, wallboard, sheetrock, and drywall - are all common names for board material used for wall and ceiling surfaces in buildings. The board material is made from gypsum (hydrated calcium sulfate - $CaSO_4$ - $2H_2O$), mined in various parts of the world, or obtained as a bi-product of the desulfurization of flue gas in electric power generating stations. Some gypsum is obtained from recycled pieces.

The gypsum is crushed to a powder and heated to remove about 75% of its water content, to produce plaster of Paris. (See *gypsum plaster.*) Plaster of Paris, when mixed with water, solidifies but, before solidifying, can be cast or formed into various shapes. For plasterboard, the gypsum powder (plaster of Paris) is mixed with small portions of various additives (paper pulp, starch, foaming agents, glass fibers, wax, or asphalt) each of which produces or enhances some property of the finished board. The resulting powder is mixed with water and the paste/slurry formed is fed between two layers of paper from large rolls into plasterboard machines which may be as long as 800 ft (244 m). As the plaster and paper coverings move through the machine, rollers on the machine distribute and compact the gypsum plaster and form the board to the desired thickness. Standard thicknesses in the USA are 3/8, 1/2 or 5/8 in (9.5, 12.7 or 15.9 mm). As the material moves through the machine, the plaster sets and the material is sliced to the desired width (usually 4 ft - 1.2 m) and cut to length (usually 8 or 12 ft - 2.4 or 3.7 m). Edges are finished, and the boards move through a long drying oven to complete the curing of the plaster. The completed boards are then stacked and palletized for shipment.

plastics - See 4A or the listing under the name of the particular plastic of interest, e.g., polyethylene.

plastic film - See 4I5.

plastic laminates, rigid ("Formica" or "Micarta") - See 6F8.

plastic wood, wood filler - is made from wood flour, finely ground dried wood, which becomes a filler that is blended with a plastic resin and a solvent (n-Butyl acetate, acetone and/or MEK) for the resin. The product is packaged in tubes or cans. When applied, the solvent evaporates, leaving a solid material that can be machined, sanded and varnished or painted.

plate glass - See 5A3e.

platinum - is found in metallic form as small grains or pebbles in alluvial sand and gravel in several countries. These grains or pebbles usually also contain other metals of the platinum group, alloyed with the platinum.[2] Platinum is separated from the other metals by a very complex aqueous chemical process. It is used as a catalyst in automotive engines and petroleum processing, in jewelry, in dental fillings, as a coating for laboratory dishes, crucibles, and other devices, and in electrical contacts and electrodes.

playground equipment - includes swings, slides, teeter-totters (see-saws), gyms, ladders and climbing frames, platforms, trapezes, and rings. Climbing structures are made either of wood or welded steel tubing. Cedar is used for quality wood equipment because of its appearance and durability. However, pressure-treated spruce is more common. Wooden frames consist of material about 4 x 4 or 2 x 8 inches (10 x 10 or 5 x 20 cm) in cross section, with rounded corners, cut to the size needed and drilled with necessary bolt holes. The frames are called "moulding" by the manufacturers. Metal frames of welded steel tubing (See *pipe and tubing, metal*) are prepunched with holes for connections. The finish is sometimes by galvanizing, but much more commonly is by electrostatic spray painting (8D7) or powder coating (8D8). Tubing pieces are connected with corner fittings made from steel stampings that wrap around the pipe, by aluminum die castings (1F), or by arc-welded (7C1) assemblies, fabricated from slightly larger steel tubing. All fittings incorporate holes to match cross holes in the tubing for fastening bolts. The connector stampings are formed from sheet steel in a progressive-die operation (2E1). Chain used for swings and trapezes is zinc plated and covered with extruded (4I1) flexible vinyl tubing. Rope may also be used for swings. Swing seats are injection or blow molded (4C or 4F) of high-density polyethylene. Slides are blow molded or made by rotational molding (4E) of the same material. Teeter-totters are made from steel tubing with blow- or injection-molded seats. Trapeze bars are made from steel tubing. Rings are injection molded.

The full units are normally customer assembled though some pre-assembly that does not significantly increase carton size may be carried out by the manufacturer. Sometimes parts are decorated with stencils. Injection-molded plastic caps are used to cover ends of tubing.

plexiglas - is a trade name for methyl methacrylate sheets or rods. See Chapter 4, especially 4H1a and 4H1b.

pliers - are hand tools that are usually impression-die forged (2A4b,) or drop forged (2A4b1) from steel of 0.25 to 0.55% carbon, trimmed, normalized (8G2e), and cooled quickly. (Some pliers are made from chrome-vanadium steel or manganese-bearing alloy steel.) The gripping teeth are form milled (3D5), and the pivot hole is drilled. Gripping teeth and cutting blades are heat treated, commonly by induction hardening (8G3a2), followed by tempering (8G2f). Surfaces are polished (8B1). The rivet that connects the two gripper parts is cold headed (2I2). All parts are usually electroplated (8C1) with nickel, zinc, or chromium. Hand grips are often molded on the handles by dip coating in vinyl plastisol (4K2). The parts are then assembled and the connecting rivet is set (7F4b).

plywood - See 6F2.

polycarbonate plastic, PC - is a special variety of polyester resin. It differs from other polyesters in that a derivative of carbonic acid is substituted for adipic, phthalic, or other acid, and a diphenol is substituted for the glycols normally used. A melting process or a phosgenation process is used in its preparation. Bisphenol A is reacted with phosgene, a highly toxic gas or, in another method, polyphenol is reacted with methylene chloride and phosgene.[2] Still another method, developed in Japan, eliminates the need for phosgene by reacting biphenol-A with diphenylcarbonate at a temperature of about 525°F (275°C), with a special catalyst and an excess of a chloride.[2]

Polycarbonate, is used for high-quality, impact resistant glazing, lenses, including lightweight eyeglass lenses, safety helmets, housings, aircraft parts, boat propellers, signs, insulators, other electrical components and compact discs.

polyester plastic[4] - can be either thermoplastic and thermosetting, but is most common as a thermosetting material. It is manufactured in two basic steps: 1) condensation of dibasic acid and a disfunctional alcohol to form a soluble resin. Maleic, phthalic, or itaconic acids can be used, with allyl alcohol or ethylene glycol. 2), the addition of a cross-linking agent to convert the resin to be thermosetting. Polymerization is by condensation reaction (4A2b). Some of the reactants (phthalic anhydride, fumaric acid) are solids; others, such as ethylene glycol, are liquid. The reaction takes place in an insulated glass-lined or stainless steel vessel at 390°F (200°C), and requires up to 20 hours, during which water, inert gas and glycol are continuously removed. The cross-linking operation takes an additional 2 to 4 hours. The liquid resin is then available for storage or shipment, in suitable containers. Polyester resins are used in the fabrication of fiberglass objects such as boats, skis, building panels, fishing rods, and aircraft components. When made into a fiber, such as "Dacron", it is blended with cotton fiber to provide permanent-press qualities to garments. Polyester is also made into useful film, e.g., "Mylar".

polyethylene plastic, PE - is made by addition polymerization (4A2a) of ethylene, $CH_2 = CH_2$. Ethylene is a colorless gas, produced by cracking petroleum. In the polymerization process, the double bonds of the carbon atoms are broken, and replaced with other ethylene molecules in long molecular chains[2]. The several varieties of polyethylene include low density (LDPE), high density (HDPE), linear low density (LLDPE) and ultra-high molecular weight (UHMWPE). (See *polyethylene, high-density, polyethylene, low-density* and *polyethylene, ultra-high molecular weight.*) All varieties require somewhat different processes, but there are two basic variations, one that produces branches on the backbone of the long molecule, and one that produces linear backbones with an absence of branches. The process for branched forms uses very high pressures during the polymerization; the process for linear forms uses low pressure. Other differences in manufacturing processes depend both on the variety to be produced and the manufacturer, but are all produced from ethylene with the aid of a catalyst. Most linear varieties also have a copolymer as a secondary ingredient. Common co-monomers used are hexene, butene, 4-methyl-1pentene and octene.[15] Branched varieties are less apt to have copolymers, but some formulations include acetate, acrylic acid, and other co-monomer materials.

Polyethylene plastics are extensively used in injection- and blow-molded products including milk and kitchen chemical bottles, toys, and housewares. Polyethylene film is widely used for packaging and other applications. Polyethylene is extruded into pipe and electrical wire insulation.

polyethylene plastic, high-density, HDPE - is made with low-pressure, low-temperature addition polymerization, from ethylene gas and a comonomer (alpha-olefin), with a catalyst and a hydrocarbon diluent. Two commonly-used catalyst systems are the Phillips type (chromium-based), or titanium compounds with aluminum alkyls.[15] Various additives may be included to prevent oxidation, to provide UV light resistance, and antistatic properties, etc. The materials are fed to a reactor that operates at about 210°F (99°C) at a pressure of 100 to 290 psi (690 to 2000 kPa). Gas that does not polymerize is cooled and recycled into the reactor, while the finished product, in granular form, is drawn from the bottom of the reactor, separated from any accompanying gas, and discharged. Fig. P3 illustrates the operation schematically.

High density polyethylene is used in blow-molding milk bottles, other product containers, fuel tanks and drums. Other uses are injection molding of pails, toys, bottle caps and appliance housings. Pipes, hoses, and wire insulation are extruded.

polyethylene plastic, linear, low density, LLDPE - is made with a low-pressure, low-temperature, polymerization process, similar to that used for HDPE. Ethylene is copolymerized with 1-butene and with lesser amounts of 1-hexene and 1-octene, using catalysts.[1] LLDPE has similar properties and applications as LDPE but is less costly to produce and can be more easily modified by changing copolymers.

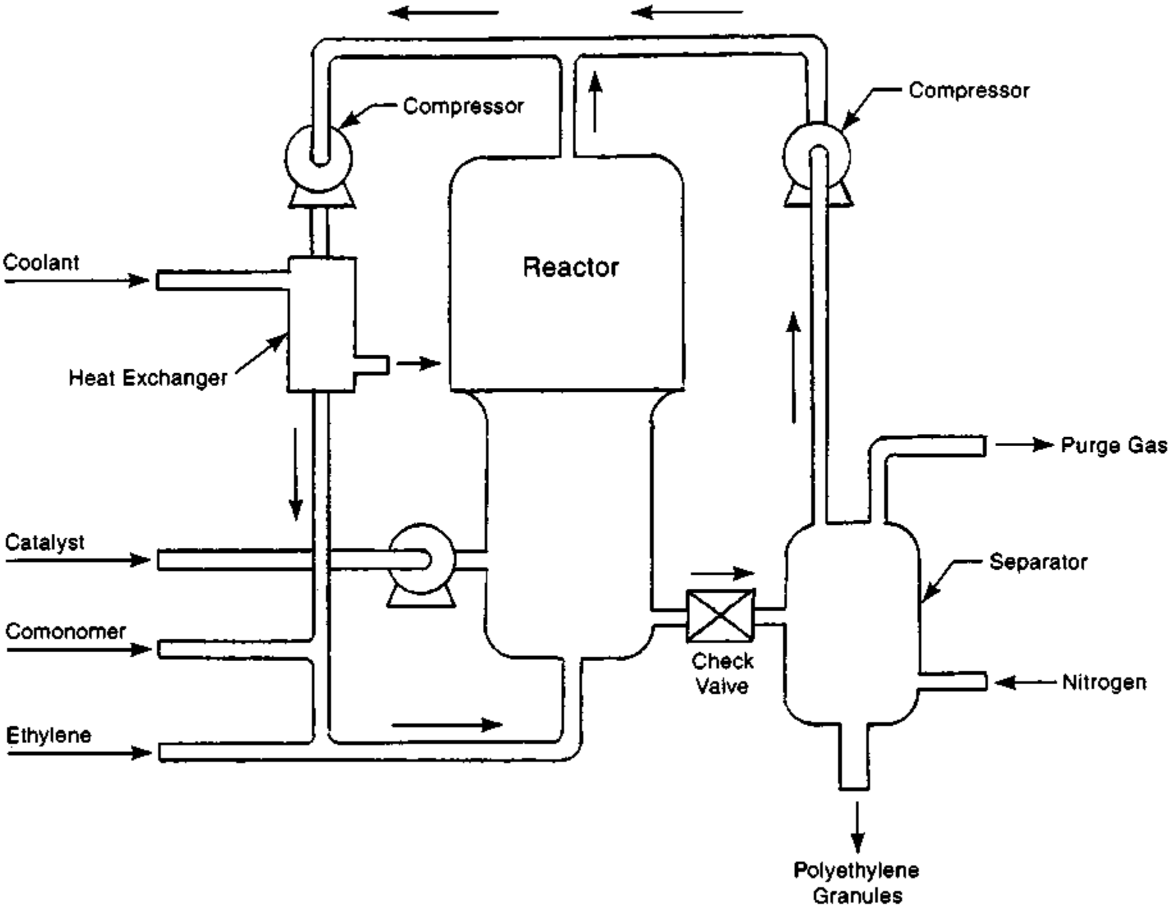

Fig. P3 The polymerization of ethylene gas to produce high-density polyethylene in a low-pressure reactor operating at a temperature of 212°F (100°C) and pressure of 100 to 290 psi (690 to 2000 kPa).

polyethylene plastic, low-density, LDPE - (See *polyethylene* above.) LDPE is produced by addition polymerization of ethylene with very-high-pressure methods. Ethylene gas is first purified to 99.8% by passing it through a demethanizer and then a deethanizer, from which the methane and ethane are removed and recycled. The ethylene is compressed to a pressure of 15,000 to 40,000 psi (100 to 275 MPa), and fed to a reactor with a peroxide catalyst. The reaction temperature is 300 to 500°F (150 to 260°C)[15]. The reaction converts about 30% of the ethylene; the balance is recycled through the reactor. The polyethylene product is extruded, pelletized, and dried.

Low-density polyethylene is extruded as wire and cable insulation, or into film for grocery and trash bags, garment bags, packaging and agricultural applications, or for lamination with paper, cloth, and other materials. LDPE is injection molded, or blow molded, into squeeze bottles, housewares, and toys.

polyethylene plastic, ultra-high-molecular-weight, UHMWPE - (See *polyethylene* above) UHMWPE is a polyethylene with extremely long linear molecules, having a molecular weight of over 3 million. It is produced by a low-pressure process similar to those used to produce linear low-density polyethylene and high-density polyethylene, and with identical reactors.

UHMWPE is used for machinery parts requiring high chemical resistance, low wear, and low friction, and as a fiber in bullet-proof vests and soldiers' helmets. It is very difficult to injection mold or extrude and is usually processed into parts by compression molding, sintering, forging, and machining.

polypropylene plastic, PP - is made by methods very similar to those used in the manufacture of polyethylene, but propylene, ($CH_3CH : CH_2$), is the basic ingredient. The propylene is a product of petroleum fractional distillation (11H1a), absorption/stripping (11H1c) and catalytic cracking (11H2a2). It is polymerized by addition polymerization (4A2a) in the presence of a catalyst using low temperatures and pressures. Sometimes polypropylene is copolymerized with ethylene or another material. There are many process variations, depending on the manufacturer. Polypropylene is a mass-produced product with a large number of producers. It is injection molded into luggage, housewares, toys, medical equipment (because it can withstand sterilization temperatures), and electronic components. PP is also made into fibers for rope and carpeting, and used in making film and coatings and in other applications.

polystyrene plastic, PS - is made from the polymerization of styrene monomer. The styrene, $C_6H_5CH = CH_2$, is clear and colorless, and liquid at room temperature. Polystyrene is made from ethylene and benzene, both of which are derived from petroleum. These are made into ethylbenzene by alkylating benzene with ethylene.[4] Then the ethylbenzene is dehydrogenated to styrene with an aluminum chloride, solid phosphoric acid, or silica-alumina catalyst. The following formula is applicable:

$C_6H_6 + C_2H_4 \rightarrow C_6H_5CH = CH_2 + H_2$. The styrene is then polymerized by addition polymerization (4A2a) with free-radical catalysts, typically in a continuous process.

Polystyrene is widely used in blister packaging, toys, ballpoint pen barrels, and, when expanded into foam, in flotation devices, packaging materials, egg cartons, hot and cold drink cups and styrofoam panels.

polyurethane plastic - is not one compound, but a group of plastics based on polyether or polyester resin.[2] A hydroxyl-terminated polyether or polyester is reacted with a diisocyanate to form a prepolymer with higher molecular weight. This prepolymer is then treated by adding difuntional compounds containing active hydrogens (from glycols, water amino alcohols, or diamines) to extend the molecular chains.[2] Many variations of properties are attainable, including rubbery materials with a wide range of hardness and elasticity.

Polyurethanes are used in applications where strength and resistance to abrasion are important. Rigid polyurethane foam is used for insulation and as a core material for aircraft wings and skis. Flexible polyurethane foam is used for upholstery, mattresses, and clothing liners. Elastomeric polyurethanes are used in roller-skate and skateboard wheels, industrial rollers, shoe soles, forklift truck tires, and medical equipment. Adhesives and spandex fiber are other polyurethane applications.

polyvinyl chloride plastic, PVC, vinyl[4] - is produced from the polymerization of the monomer, vinyl chloride ($CH_2 = CHCl$). Several methods are available for making vinyl chloride. One method employs ethylene ($CH_2{:}CH_2$), chlorine, copper chloride ($CuCl_2$), catalyst and oxygen (from air). The plastic resin is made from vinyl chloride liquid in a physical polymerization process that involves vigorous stirring of a mixture of vinyl chloride liquid, water, a peroxide catalyst and an emulsifying agent over a several-day period. PVC particles are then removed from the mixture by spray drying or by coagulation from acid addition. To provide greater flexibility, toughness, and chemical resistance, PVC is often made with polyvinyl acetate as copolymer. This is done by mixing monomers of both materials with a solvent and polymerizing them together in an autoclave. Plasticizers, stabilizers, fillers, pigments, and lubricants are also often blended with the basic resin. Rigid PVC is extruded for roof gutters, building siding, window channels and piping, It is blow molded into clear bottles, and injection molded into pipe fittings. Flexible (plasticized) PVC is molded into shoe soles, and made into sheet for rain gear, gloves, upholstery, and floor tile. Adhesives are also made from PVC.

polymers - See 4A or the listing under the name of the particular plastic of interest, e.g., polyethylene.

porcelain - is a ceramic made from mixtures of clay, quartz, feldspar, kaolin and other materials. It is usually translucent and is used for chinaware, pottery, chemical-resistant parts, electrical parts, and dental components. Porcelain is especially hard and requires a temperature of about 2650°F (1450°C) for firing. See Chapter 5. (The term, "Porcelain enamel" is often used for the glass-like coatings of stovetops, cooking utensils, and signs although these are not made from porcelain materials; "Vitreous enamels" would be a preferred term.)

portland cement - See *cement, portland.*

"popcorn" loose-fill packaging - These very light weight shapes are made from expanded polystyrene foam beads. See 4C4 for a description of the operation when used for pre-expanding such beads for later molding into insulated drinking cups and other shapes requiring insulating properties. When the beads are to be used for loose-fill packaging, they are run through the expansion operation two or three times in order to ensure maximum expansion. The beads are conveyed through the steam-heated expansion chamber on a wire mesh conveyor.

potato chips - Potatoes for making potato chips are sorted by size and fed to the chip-making operation on vibrating screens that separate any residual dirt or other foreign matter from the potatoes. They are then conveyed in a water stream to peeling machines. The water stream provides washing action as well as transportation. Peeling is achieved by abrasive action in automatic abrasive-lined barrels. The residue is used for animal feed. The potatoes are cut in half and then fed to automatic rotary slicing machines. These machines use straight knives, mounted at an angle on the sides of a drum-shaped cutter, to slice the potato halves into pieces of 0.040 to 0.065 in (1.0 to 1.6 mm) thickness. The sliced pieces are conveyed to deep fryers and cooked at 250°F (121°C) in partially hydrogenated soybean oil or, for some varieties, in lard. However, increasingly, for health reasons, the deep frying takes place in liquid, non-hydrogenated oil. Paddles in the frying kettles keep the potato slices in motion. After frying, the chips are spread on a conveyor where salt is added and the chips are dried and inspected by machine vision. Chips that are too dark or have dark spots are rejected automatically. The initial moisture content of potatoes is about 75% but this is reduced to only 2% after cooking, though 30% of the initial weight is restored with oil. Finished chips are conveyed by vibratory conveyor to a packaging machine. Packaging is automatic by weight. The chips fall into pockets on the machine, which open when the desired weight is reached, dropping the chips into an open bag. Nitrogen is introduced to the bags to provide a longer shelf life and the bags are sealed.

pottery - See *chinaware* and 5B2.

powders, metal - One of several possible manufacturing methods is employed, the choice depending on the metal used and the application of the powder. One of the most common methods is *atomization,* the spraying of molten metal into a chamber where the droplets cool and solidify as they fall to the bottom of the chamber. One approach, used to achieve the atomization, is to break up a stream of the molten metal with a jet of inert gas, air, water or steam (13E1). Another method uses the discharge of a small stream of metal on a spinning disc (13E2) to break up the metal into small droplets which become powder grains. A third method uses a plate vibrating at ultrasonic frequency (13E3) to get the same effect. Following solidification of the particles, sieving is used to select and classify particles of the desired size.

Another method is to use *chemical reduction*[25], wherein the oxide of the metal is brought in contact with a reducing gas at a temperature below the melting point. With copper and tungsten, a fine powder of the oxides is reduced with hydrogen. For iron powder, iron oxide (from mill scale), is ground to powder form and is reduced with carbon monoxide gas in a furnace at about 1900°F (1040°C). Another method with iron uses a bed of coke and limestone to reduce treated iron ore to porous cakes, which are then ground into powder. For some metals, the starting material for chemical reduction is a liquid solution of a metallic compound. Other metals that are made into powder by chemical reduction are molybdenum, cobalt, nickel and tungsten.

Electrolysis[25] (11C10) is still another powder production process. When iron powder is made by this method, a steel plate forms the anode of an electrolytic cell and stainless steel plate is used as the cathode. Direct current, over a period of hours, deposits iron on the cathode. The iron is stripped off periodically, washed and screened for sizing (11C8a). Since it is initially brittle, it then may undergo annealing (8G2).

powdered milk - See *milk, powdered.*

powder metal parts - See 2L1.

pretzels - are commonly made from wheat flour, vegetable oil - often partially hydrogenated (12J3) - salt, yeast, malt, and baking soda (sodium bicarbonate). There are, however, some differences, depending on the manufacturer and pretzel type. The ingredients, with some water, are mixed in kneading mixers, as pictured in Fig. 11G5-2. (Also see 12D.) After mixing, the dough is discharged into an extruding machine that forces the dough through an oval-shaped die and then cuts the extrudate into loaves called, "dough balls." The dough balls are conveyed to another extruder where they are made into the traditional pretzel shape in one of two ways: In one method, used with the large pretzels, the dough is extruded into a rod or "noodle" whose cross section is the size wanted in the pretzel. A special machine grabs each end of the rod and twists the rod into a pretzel shape. In another method, dough from the dough ball is extruded through a die whose opening matches that of the pretzel shape wanted, which may be a non-traditional shape. The extrudate is sliced to the thickness of the pretzel and the sliced pieces drop to the surface of a conveyor. With either method, the dough, once formed, is conveyed to a salting station where salt crystals are sprayed on and adhere to the soft dough surface. The pretzels then move on the conveyor to the baking oven. There are two stages of baking: In the first, at a temperature of about 550°F (288°C) for 5 to 15 minutes, depending on the size of the pretzels, they are baked mostly on the surface and acquire their characteristic brown color. They are crisp on the surface only. Then the pretzels exit the oven, fall off the end of the conveyor onto another conveyor beneath the first one, and are carried back into the lower portion of the same oven. Here the temperature is about 250°F (120°C). This second conveyor moves more slowly than the first and the pretzels remain in the oven for from 20 to 80 minutes, and become fully crisp throughout. The pretzels are conveyed to a packaging machine that dispenses them into chutes that are part of a weighing apparatus. When the standard weight of a package is discharged into the chute, it opens, discharging the pretzels into an open plastic foil bag. Nitrogen gas is puffed into the bag to provide longer shelf life for the pretzels than is possible with ambient air. The filled bags are inspected and placed in corrugated cartons for shipping. The entire operation, except for the initial dough mixing, is on a continuous basis. In one plant, two operators tending the series of machines, produce 4000 pounds of pretzels per hour.

printed circuit boards - See 13A through 13D.

printed fabrics - See 10G2.

printing plates, gravure - See 9D3b.

propane - See *gas, liquified petroleum.*

prototypes, rapid - See 14A.

putty - is a mixture of finely-divided calcium carbonate powder and 18% boiled linseed oil, sometimes with white lead added. The calcium carbonate powder is made by wet grinding and levigating natural chalk.[4] Other putties also include red lead, rubber, or plastic resins and other inert fillers. The prime applications are to cement panes of glass in wood or metal window frames and to fill nail holes in wood. Other glazing compounds that retain flexibility are made from a number of hydrocarbon solvents, polymers, and fillers. One variety is made from a mixture of acrylonitrile, ethylene glycol, phthalate ester, aceldehyde, formaldehyde, and crystalline silica.

pyrex glass - See *cooking utensils.*

Q

quarter-sawed lumber boards - See 6A2, 6A4 and Fig. 6A2-1.

quartz glass - is a type of glass that is particularly temperature and chemical resistant but difficult to work. It is made from quartz (Si_2O_7) sand with little or no other additives. Quartz glass components are made with essentially the same methods as are used with other glass compositions (Chapter 5), but its high melting point and high viscosity when melted require special care and skill in fabrication. Quartz glass is used in light bulbs, crucibles, tubes and rods in furnaces, in optical glass, and in chemical process and integrated circuit production equipment.

quicklime[2] - is calcium oxide, CaO, and is obtained by heating limestone or oyster shells in a kiln at about 1000°F (540°C). This burns out carbonic acid gas. Quicklime is used in glass manufacturing, water treatment, air pollution control, iron melting, and in a number of chemical processes.

R

rag paper (rag bond) - See 9B3.

rapid prototypes - See 14A.

rapid tooling - See 14B.

rattan furniture - is made from the stems of several species of climbing palm plants of the Calamus and Daemonorops family that grow in Southeast Asia. The stems grow to several hundred feet in length and are quite uniform in diameter. They are cut near the base, pulled from the plant, stripped of leaves and tendrils and cut to lengths suitable for shipping. Rattan is used for canes, umbrella handles, and similar objects as well as furniture. It is also split and used for seating, baskets, and heavy cordage.

rayon - is a general name for a number of artificial silk fibers made from cellulose-based plastics. The cellulose is obtained from soft wood, or from cotton linters, the short fibers that adhere to the cotton seeds. In the viscose process for producing rayon, cellulose is treated with caustic soda (sodium hydroxide), shredded, aged to form alkali cellulose, and then treated with carbon disulfide to form cellulose xanthate. This material is allowed to ripen, is filtered, and then extruded through a spinneret (an extrusion die with many small holes) into an acid solution that hardens the cellulose. See Fig. R1. The filaments are stretched, washed, dried, and packaged.[3] In another process for viscose rayon, the cellulose is dissolved in an ammonia solution of copper sulfate and then extruded through spinnerets as with the viscose process. By stretching the fibers, superfine yarns can be produced, and the resulting fabrics have the appearance of sheer silk. Rayon fabrics are used for vehicle tire reinforcement and, woven with other fibers, for women's dresses and underwear. They are also used for carpets and home furnishings, and surgical materials. Also see 10A2.

refractories - are materials with exceptionally high melting points and with strength at very high temperatures. Materials with melting points above 2880°F (1580°C) can be so classified. The most commonly used refractories are ceramic. Natural refractory materials include kaolin, kyanite, chromite, dolomite, bauxite, zirconia, and magnesite. Magnesite and dolomite are the most important. Artificial refractories include silicon carbide and aluminum oxide. Refractory materials can be formed into various shapes, and each has properties that determine its usage. Refractories are used for furnace linings, melting pots, kilns, and similar applications. They are important materials in metals refining and processing, and in glass manufacturing.

Most refractories are processed in some way before being made into useful forms. From the natural state, they may be washed, crushed, ground, and mixed. There should be a balanced mix of large and fine particles. Screening may be used to get the proper balance of ingredients. Water may be added to aid in compaction for molding, most commonly into firebricks. Refractories can also be made into moist pastes with water for use as mortars or for forming by ramming into place, or into molds. With additional water to make them more liquid, they can be cast. After molding, the molded parts are dried and then burned (calcined) in a kiln.

resistors, electronic - See 13L1.

rice wine - called sake in Japan is made by fermenting rice with the mold, tane' koji[2]. The process starts with steamed rice which is mixed and kneaded with the mold and water, heated, and placed in

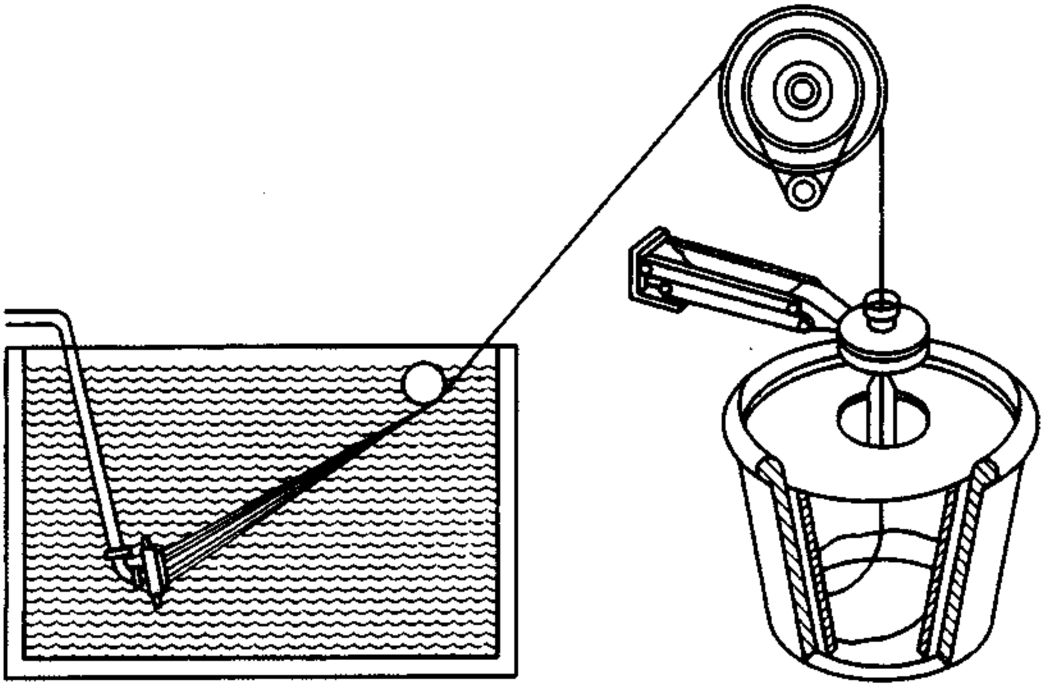

Fig. R1 Spinning viscose rayon yarn in an acid bath. *(from Shreve's Chemical Industries, 5th ed., G. T. Austin, 1984, McGraw-Hill, New York, used with permission.)*

large vats. The mixture is allowed to ferment for about six weeks, after which the liquor then is filtered and bottled. See fermentation in Chapter 12, section J4.

rings (jewelry) - See *jewelry.*

rock wool (mineral wool) - See 5A6d.

roller blades and skates - See *inline skates.*

rope - is made from both natural and synthetic fibers. Hemp is a traditional material used for strong marine ropes. Sisal, flax, and jute are other natural materials. Nylon, polypropylene, polyester, rayon, and polyethylene plastics have become more common in recent years because of their high tensile strength and light weight. Fiberglass is used in some applications where chemical or electrical resistance is important. Many ropes are made from combinations of fibers.

Rope manufacturing requires several steps. The first step involves spinning fibers into yarns by the spinning, carding and combing methods used in the textile industry. (See 10B, 10B2 and 10B3.) In the second step, these yarns are twisted into strands on stranding machines called *formers* or *bunchers.* Then, the strands are twisted into a rope. The most common industrial rope consists of three S-shape strands, twisted together in the direction of opposing twist (Z-shaped twist). This rope is known as hawser-laid or plain rope. Other ropes are made with four strands and are known as shroud-laid rope. Twisting is carried out on special machines that feed the strands from bobbins, pull them through compression tubes with a mechanism called a capstan flyer, and twist them into rope on a revolving flyer.

rubber bands[13, 18] - are made from both natural and synthetic rubber. Synthetic rubbers are used for most rubber bands, but those from natural rubber have the best elasticity. The initial processing of rubber is as described in section 4O1 for natural rubber and 4O2 for synthetic rubber. Compounding (4O3) then takes place to add sulfur for vulcanization, pigments for coloring, and other additives for various properties. This operation typically involves a 400 lb (180 kg) batch. The rubber is milled by being fed between two parallel, opposed rollers that rotate in opposite directions at different speeds. The rubber is kneaded and folded over and over repeatedly, and undergoes a change to a smoother, more even consistency. It exits the machine as a 1/2 in (13 mm) thick slab. As it exits, the slab is slit into strips about 8 in (20 cm) wide, by rotating cutters that bear against the cylinders. The strips are lubricated with talc and fed to an extruder that extrudes (4I) the rubber as a long round tube. For different sizes of rubber bands, different sizes of extruder dies are used. A hole in the center portion of the extrusion die discharges air into the tube so that it doesn't collapse. The tubes are fed from the extruder into a long tank containing a liquid salt solution that is maintained at a temperature of 370°F (190°C). The tube remains in the salt solution for a short time but the time is long enough for the heat to vulcanize the rubber. The tubes then pass through a washing bath that removes residual talc and salt. They move to a cutting machine that slices across each tube repeatedly to cut it into narrow bands. The completed rubber bands are then conveyed by a vacuum system to temporary storage, or to packaging machines that load them into cardboard boxes, by weight, for shipment to customers.

rubber, natural - See 4O1.

rubber, synthetic - See 4O2.

rubber, silicone - See *silicones.*

rubber, urethane - See *polyurethane* and 4O2 (*synthetic rubber*).

rubies and sapphires[2] - are different colors of corundum - crystalline alumina, (aluminum oxide, Al_2O_3). The raw stones are found in alluvial deposits containing sand, gravel, silt, and clay, and in corundum deposits. The red color of rubies comes primarily from chromic oxide in the corundum; the blue of sapphires comes from iron oxide and titanium dioxide.

Artificial sapphires and rubies are made by crystallizing pure alumina. To achieve the necessary purity, the alumina is made from calcined ammonium aluminum sulfate and is in powder form. The oxides needed to provide the desired coloring are mixed with the powder. There often is a blending of the color-producing oxides, and colors can be modified by careful heating and cooling, or exposure to strong radiation. In the Verneuil process, the alumina is flame-treated in a hydrogen-oxygen flame, burning downward at 3430°F (1890°C) to fuse and form a single rod or carrot-shaped crystal boule[4]. The boules can be as large as 400 carats but generally average about 200. The boules are cut and polished using saws, grinders, polishers, and lappers, that achieve their cutting action from diamond abrasives. Most artificial sapphires and rubies are used for bearings in watches, clocks, and instruments, for valves, for thread guides in textile machinery, and in other parts requiring wear resistance and dimensional stability. However, gemstones for jewelry can also be made with this process. (For information on gem cutting, see *jewelry.*)

rugs (carpets) - See 10I1 for Axminster, Brussels, chenille, velvet, and Wilton types. See 10I2 for pile rugs, 10I3 for knitted, 10I4 for needle punch, 10I5 for hooked, 10I6 for braided, 10I7 for oriental and 10I8 for needle point types.

rum - is an alcoholic beverage made from molasses, the thick syrup that remains after sugarcane has been processed into sugar. The molasses, with water and often other sugarcane residues, is fermented, changing sugars to alcohol. The fermented mixture is distilled, yielding a clear liquid that is aged in oak casks for a period of one to seven years. Some coloring may be absorbed from the oak casks, but some rums are further darkened by the addition of caramel coloring. (See *distilled spirits.*)

S

safety glass for automobiles - There are two prime manufacturing methods: In the first method, two pieces of thin sheet glass, made by the float process (5A3f), are assembled with a viscous plastic layer (usually polyvinyl butyl) between them, and are pressed together and heated. If the sheets are to be curved, as in windshields, they are put together with talc or another separating agent and bent by gravity (5A5a). They then pass through an annealing lehr (5A4a). The two formed sheets of glass are then assembled with the viscous plastic layer between them. This assembly occurs in an autoclave, where pressure and heat ensure a proper assembly. The edges of the sandwich are sealed with a water-resistant material. If the glass is broken during use, the broken pieces stick to the internal plastic layer, which is tear-resistant. Safety glass of this type, in addition to its use in automobiles, is also used in machinery guards, buildings, television sets, and instruments.

Another form of safety glass is tempered glass (5A4b) which, if broken, breaks into small, somewhat regularly-shaped pieces with no long, sharp, cutting edges. This type of safety glass is used in automobiles in Europe, and in side windows of cars in the USA.

Wire glass (5A3g) may also be considered a variety of safety glass.

sailplanes (gliders) - are unpowered aircraft that maintain their flight by utilizing natural updrafts of air. They are, of necessity, of lightweight construction. Current sailplane structures are made from composite materials consisting of plastic resins reinforced with high strength fibers. The external skin is an integral part of the supporting structure.

The method normally used involves hand lay-up of thermosetting plastics (4G1). Manufacture of each piece of wing or fuselage structure begins with a female mold for the part to be produced. There are four major parts for the wings: a top surface with reinforcements and a bottom surface with reinforcements, for both the left and right sides. The mold surfaces are first spray coated with a gel coat of polyester resin that will form a smooth exterior surface for the part. When the resin has set but is still tacky, an epoxy resin coat is applied by rollers on top of the gel coat and a thin layer of fiberglass is laid on and pressed into the epoxy with rollers. Then a layer of carbon fiber fabric is laid in the mold and bonded to the existing material with a liberal amount of epoxy. (The carbon fabric is the main reinforcing medium.) Then a layer of PVC foam sheet (See *polyvinyl chloride.*), about 1/4 in (6 mm) thick, is carefully laid on the epoxy. The foam sheet has been previously punched with many small holes to provide a means of penetration for the bonding epoxy. Openings between pieces of the foam sheet provide room for a wing spar, ribs, and control devices. More epoxy is added, and the wing spar and several ribs, made earlier with epoxy and carbon fiber, are put in place. Another layer of carbon fiber fabric is added with more epoxy to bond the spar and ribs to the existing structure. The process is largely manual, with the necessary precision controlled by the molds. After all wing materials are in place, a layer of plastic film is applied temporarily over the entire surface of the material in the mold. A vacuum is applied under the film so that atmospheric pressure forces the film to squeeze the epoxy and reinforcement, and they are compacted with no voids between layers. The epoxy is cured overnight with the aid of heat supplied to the mold through channels in which warm water is circulated. After the epoxy has cured, hinges for control surfaces and control apparatus, and wing-mounting hardware are bonded into place. The wing top and bottom, both made with the same hand lay-up process, are bonded together with the aid of a precise fixture and an extensive process that assures that the correct amount of epoxy is used on all bonding surfaces. Fuselage and tail components (stabilizer and vertical fin) are made with similar hand lay-up methods and bonded together. (The fuselage may use Kevlar fiber reinforcement instead of a foam sandwich construction.)

Control hardware and other non-plastic parts are next assembled to the fuselage, wings, and tail. Control surfaces, ailerons, elevators, and rudder, are also installed. Before completion, however, the exterior must be finished and this usually involves spray painting with polyurethane enamel and many hours of wet sanding by hand with progressively finer abrasives. Final assembly is next. The cockpit canopy, seating, various seals, control apparatus, instruments, and electrical connections are installed. The wing halves are mechanically attached to a central spar in the fuselage.

After assembly, a lengthy quality check is made. The sailplane is flight tested in accordance with a prescribed test program. If successful, the sailplane awaits an airworthiness certificate, license, and shipment to the customer. Fig. S1 shows wing molds in use.

salt - (sodium chloride - NaCl), is produced by one of three methods: 1) underground mining of solid salt, producing relatively coarse rock salt. 2) solution mining, where underground salt is dissolved in water to form a saturated brine that is converted by evaporation to granulated salt, often referred to as "table salt". 3) solar evaporation of sea water or salty lake water to produce "solar salt". The purity of rock salt can vary between 95 and 99% NaCl. Solar salt is typically around 99.5% pure and granulated salt has a purity varying between 99.8 and 99.95%.

Underground salt mining is quite similar to coal mining and the equipment used is often the same. A room and pillar system is used with extraction rates varying from 65 to 75%. After the rock salt is blasted free from the solid deposit, it is fed to a series of crushers (11D1) and screeners (11C8a), to produce various grade sizes ranging from 3/8 in (10 mm) down to 12 mesh (1/16 in - 1.5 mm).

In the production of evaporated granulated salt, fresh water is fed to a deep rock salt deposit. The

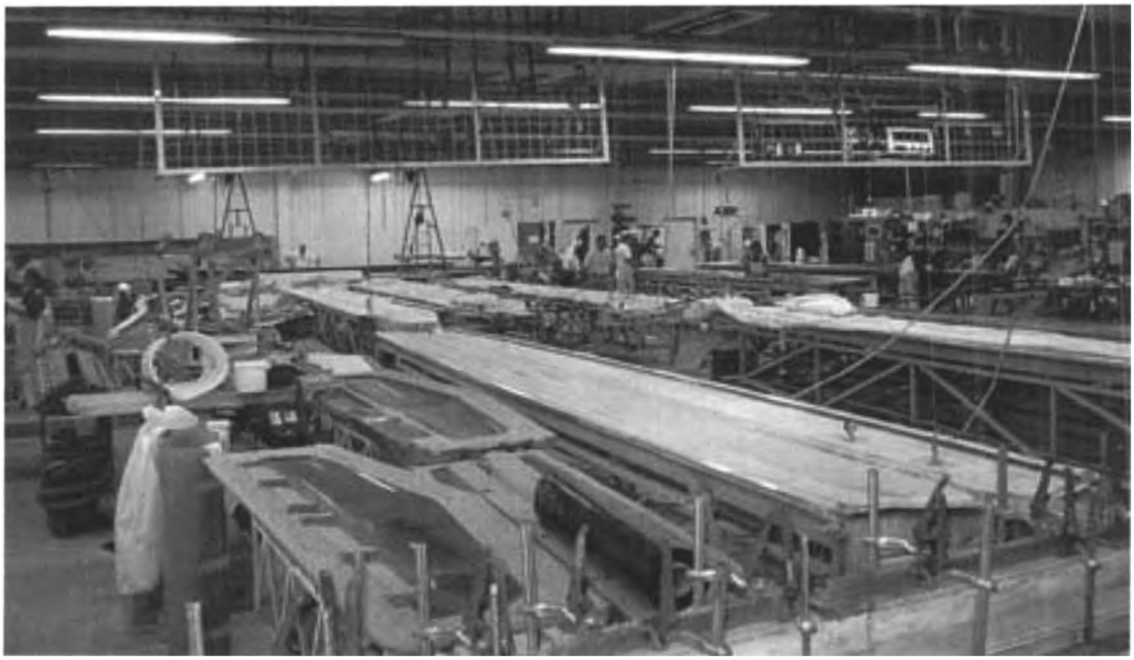

Fig. S1 The factory floor of a sailplane manufacturer showing molds for tail and wing components. *(Courtesy DG Flugzeugbau GmbH.)*

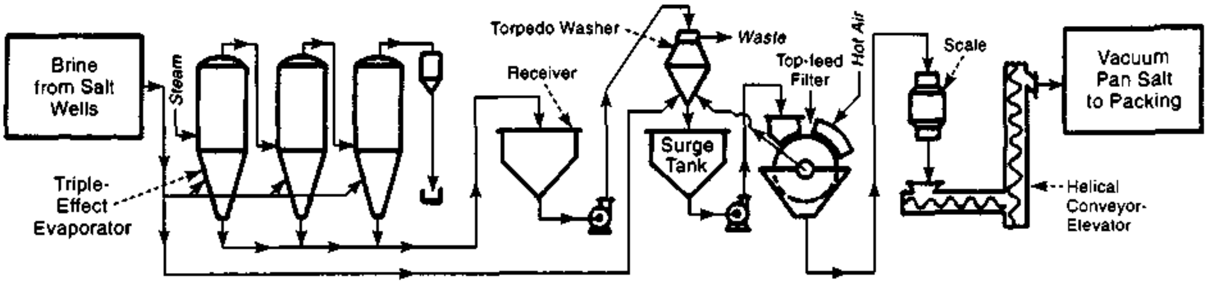

Fig. S2 The vacuum pan system for making salt from brine. (*from Shreve's Chemical Process Industries, 5th ed., G. T. Austin, McGraw-Hill, New York, 1984. Used with permission.*)

rock salt dissolves in the water to the point of saturation, resulting in a brine of about 26% NaCl. This brine is returned to the surface where, after chemical treatment to remove impurities (mostly calcium sulfate), it is fed to a series of multiple-effect evaporator pans, operated under vacuum (See 11C1d and Fig. S2.). The pans are heated, usually by low-pressure steam. Salt in suspension in the brine is removed by filtration (11C7a).

Solar salt is usually produced from seawater, which contains an average of 2.8% NaCl plus many other minerals in various quantities. (Sometimes, denser lake water is used.) Fresh seawater is fed to a series of irregularly-shaped and shallow concentrating ponds, where solar radiation, wind, and heat cause evaporation. The brine increases in concentration of salt and impurities, particularly calcium sulfate (gypsum). The gypsum, and other impurities precipitate out before the salt does. When the brine reaches a concentration of about 26% NaCl, it is fed to a series of shallow, rectangular, crystallizer ponds where the salt crystallizes in a bed that can range up to 8 in (20 cm) or more in thickness. This salt is harvested using mechanical harvesters, and trucks then haul it to a washing plant where other impurities, including organic matter, are washed out. The salt is then conveyed to a storage pile where dewatering occurs. After dewatering, the salt is reclaimed and loaded for bulk shipment.

Much salt is shipped in bulk freighters, particularly if the salt facility or user are near water-shipment facilities. Rail cars and trucks are also used. Bulk salt is heavily used for winter road use and in chemical processing. The amount of salt used in food processing (e.g., for pickling and meat treatment) is much less and only a small percentage of total production, on a weight basis, becomes table salt. Some salt produced by the above methods is packaged into 15, 50 and 80 lb (6.8, 23 and 36 kg) paper or plastic sacks, but most is shipped in bulk.

Table salt (mostly from solution mining), may be crushed and ground to the desired particle size. Magnesium carbonate, calcium carbonate, and sodium ferrocyanide, may be added to ensure that it flows freely, even if the humidity is high. Potassium iodide or sodium iodide may also be added for health reasons. Efficient automated high-speed packaging lines produce the familiar 26 oz. (0.74 kg) cylindrical cardboard containers.

sandpaper - is made from crushed grains of quartz bonded to heavy paper. Sandpaper is sometimes called, *flint paper*. Long lengths of paper are processed at one time. They are first coated with adhesive. Various types of adhesives are used, depending on the application. The quartz grains are then placed on the paper in a single layer using electrostatic attraction in order to position sharp edges upward, where they will contact the work, and to properly space the grains. The adhesive is allowed to dry and another layer is applied and dried. The sheets are then cut to the desired length. When aluminum oxide, embedded in iron oxide, is used as the abrasive, the product is called emery paper, or emery cloth if the backing is cloth rather than paper. Silicon carbide grains are used in some abrasive paper. Sandpaper is used in the finishing of wood, and emery and silicon carbide are used when metals are to be polished.

sanitary paper - See 9B and 9C4.

sanitary ware - such as toilets and lavatories, are ceramic products made from clay mixtures. See section 5B. Slip casting (5B8), (also known as drain casting), is a common manufacturing method for such products because of their often hollow construction. The workpieces are smoothed by hand, with sponges, after casting, dried and fired. Glazing (5B15) is applied to the product after firing, after which there is a lower-temperature firing, followed by inspection and packing.

sapphire, synthetic - See *rubies and sapphires.*

saran - is a trade name for a copolymer of polyvinyl chloride (13%) and vinylidene chloride (87%). The monomers for both materials are mixed together with a catalyst and heated to bring about polymerization. The copolymer is then usually extruded to make film (blown film extrusion - 4I5a), sheets, or fibers. Saran is made into the common kitchen wrap, and filters, insect screening and upholstery.

satellites and spacecraft - are made with manufacturing techniques quite similar to those used in aircraft manufacture. In both cases, light weight and extremely high reliability are paramount. These requirements have led to a substantial use of composite materials. Another major factor is that these devices contain much electronic gear for communication and instrumentation. Honeycomb and other light weight composites are used extensively for structural and body components. One major difference between conventional aircraft and these products is that these devices are assembled under clean room conditions. The assembly room is sealed; entering air passes through fine filters; floors, walls, and ceilings have few seams and are cleaned each day; temperature and humidity are closely controlled. Because of the one-of-a-kind or very limited-quantity production, line assembly is not common and manual operations predominate. There is an intense concentration of inspection and testing operations as the assembly progresses, in keeping with the extreme reliability requirements for these products. Some testing takes place in a vacuum to simulate space conditions. Testing devices are computerized and automatic, and where machining and other operations are involved, computer control is utilized to insure high precision and reliability of dimensions and other characteristics.

satin[2] - was originally a heavy silk fabric woven with a close twill weave. (See Fig. 10C-1.) Now, the same type of weave of other fibers is also called satin. The warp threads are very fine and are prominent; the weft threads are covered. In the most common arrangement, an eight-leaf twill, the weft is intersected and bound down at every eighth pick. Satin fabrics can be dyed in many colors and are used for the lining and trimming of garments. They are also used for dresses, upholstery, and bedspreads.

sausages - are a product of meat processing. Their manufacture involves the use of finely ground meat, usually highly seasoned, which is stuffed in a casing. There are many varieties of sausage, depending on the meat used, other ingredients, the spices involved and the means of preparation. Though sausages may contain almost any meat, poultry, or fish, the most common meats are beef and pork. Often, mixtures of several meats and meat-processing by-products are used. Other ingredients are cereals, soy flour, water, vegetable starch, colorings, and flavorings. Seasonings are widely varied and include salt, garlic, pepper, coriander, nutmeg, vinegar, mace, cloves, and chili peppers. Casings may be made from the intestines or other internal organs of meat animals, from extruded plastics, from fabric coated with paraffin, or from other animal protein reconstituted to tubular form.

The meat contents are chopped and ground, and mixed with other ingredients (12D). The mixture is extruded (12J5) and stuffed into the casings. Cooking (12G6), smoking, and pickling (12J7) are common processing operations that follow.

sauerkraut - is made from cabbage that is fermented (See 12J4). Salt controls the bacterial action. Acid develops during the fermentation and acts as another preservative, as well as contributing to the flavor of the sauerkraut.[2]

screwdrivers - The processes for making conventional screwdrivers for slotted screws and those for Phillips-head types are the same except for the end-shaping operations. The operation sequence begins with coils of carbon-steel wire of a larger diameter than the screwdriver shank. Wire drawing (2B2) is the first operation to reduce the diameter of the wire to the desired dimension. The wire is then annealed (8G1) and straightened (2K2), cut to length, and formed to shape with a variety of press forming, trimming (2C6), milling (3D), broaching (3F), and grinding (3C) operations, depending on the type of screwdriver, the particular manufacturer's methods and the finish level of the model involved. "Wings" in the shank near the upper end are press cold formed to transfer torque from the handle to the shank. Standard screwdrivers are first flattened at the tip in a cold-forming press operation, and then press trimmed and/or machined or ground to refine the outline. Machining involves either milling, broaching, or surface grinding (3C3). The tips of Phillips-head screwdrivers are either machined or hot-formed, and ground to produce the four-grove pointed shape. After press operations and machining, the screwdrivers are through-hardened (8G3c) with oil quenching and tempering (8G2f). The completed shanks are polished (8B) chemically and/or mechanically and electroplated (8C1) with nickel or chromium. Handles are normally injection molded with the shank as an insert in the mold (4C6). Cellulose acetate is the most common plastic used, particularly for higher-grade screwdrivers. Some handles are made from extruded plastic, sometimes with two different-colored materials coextruded (4I2), then machined at the ends and drilled in the axis. The shanks are then pressed into the handles. Handles may be hot stamped after assembly with the manufacturer's identification. A final operation, with most tools, is packaging, usually blister packaging. The operation is fully automatic with dedicated equipment (7F3b). Fig. S3 illustrates the full manufacturing sequence.

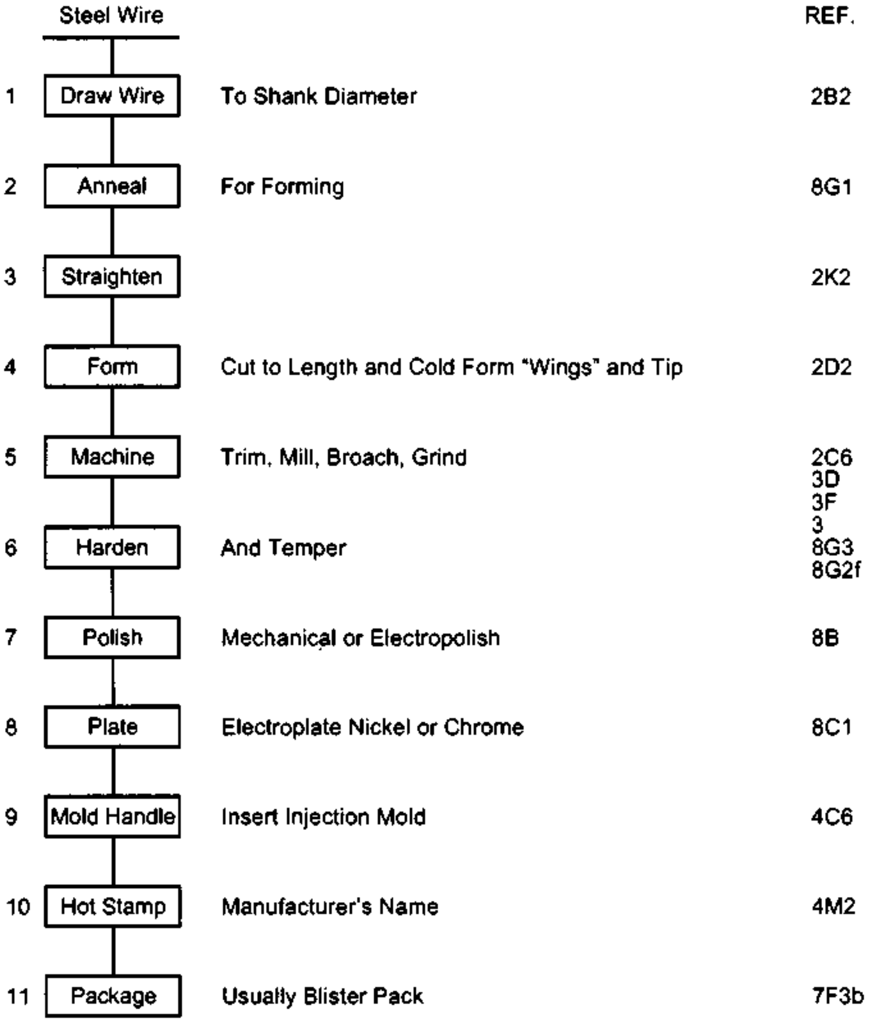

Fig. S3 The sequence of operations for making a screwdriver.

screws, machine and cap - See *bolts.*

screws, wood, drive, and sheet metal - are made by cold heading (2I2) followed by thread rolling (3E7) in a highly automatic operation. Carbon steel wire is fed to the cold-heading machine and, in a series of blows with the necessary tooling, the head is formed including slots or recesses for driving. A taper is formed at the end of the shank. The screw blanks are then tumbled (8B2) and fed by vibratory feeder to a thread rolling machine. Threads are rolled, often including a gimlet point at the end. Sheet metal and drive screws are heat treated for hardness (8G3c). The screws are then cleaned (8A) and tumbled, and usually barrel plated (8C3) with zinc for corrosion protection, and then given a chromate conversion coating (8E3). Other surface treatments such as black oxide (8E4) or ceramic coating may also be employed.

screw threads - See 3E.

semiconductors - are materials that are neither conductors nor insulators of electricity but lie somewhere between. Silicon is the most common of these materials, but germanium, gallium arsenide, selenium, and other compounds are also used. The semiconductor properties are obtained by starting with a material of extremely high purity and then doping it with a very small quantity of another element such as boron, arsenic, antimony, phosphorus, or cobalt. Doping changes the electrical properties of the material, allowing it to become much more conductive. Semiconductors are made as a single crystal of high purity, and the doping can be carried out by one of two methods: thermal diffusion or ion implantation (13K3c). Semiconductors in the form of transistors and diodes in integrated circuits are the basis of present-day computers. Semiconductors are also used in rectifiers, as controllers of electrical current, and as sensors. See 13K and 13L5.

sewing machines - The machines that put stitches in fabric to make garments and other cloth products are complex assemblies of hundreds of parts, most of which are of high precision. The main structural parts, the arm and the bed, have been made for many years of cast iron, using sand molds (1B). These parts are machined with a number of drilling, reaming, boring, milling, and grinding operations (Chapter 3) to provide a base and bearing surfaces for parts that make up the mechanism. Some holes are both rough and finish bored (3B5) to provide precise alignment and location. For household sewing machines, produced in considerable quantity, most of these operations are performed on special machines. The arm and bed are polished (8B1) and filled to provide smooth surfaces, bolted together, electrostatically painted (8D7) and decorated with decals. Household sewing machine arms and beds are more commonly made of die cast (1F) aluminum instead of cast iron and, more recently, reinforced and filled thermosetting plastics are being used (4C2). Both of these alternatives reduce the amount of machining required.

Many metal parts are involved in the sewing mechanism. Some are made by machining small sand castings, die castings, or investment castings (1G). Others are made on screw machines (3A2c). Conventional metal stampings (2C and 2D) or fineblanked stampings (2C9) are made, and sometimes are subjected to finish-machining operations. Other parts are made by powder metallurgy methods (2L1). Gears are machined with gear-making equipment (See *gears*) or are molded (4C1) from polyurethane or other materials. Some critical parts are surface heat treated (8G3a and 8G3b) to provide longer wear resistance. The shuttle, a critical part involved in handling the thread during stitching, requires 60 or more separate operations. These parts, and others that touch the thread, must be polished to a very smooth surface so that stitching takes place reliably. Most such parts are then chromium plated (8C1). All these parts are assembled to produce the stitch-forming and fabric-moving mechanisms. Some external parts are injection molded (4C1) of ABS and other plastics. Current machines now often include electronic controls with linear motors to move the needle when making decorative stitches. Other machines use plastic or metal cams to achieve the same result mechanically. An electric motor drives the mechanism.

The assembly of the machine takes place on a conveyorized assembly line (7F2), typically of 20 or more manual workstations. Final operations involve visual inspection and sewing performance tests for each machine before it is packaged for shipment.

shampoo - See *detergents.* Shampoos consist of one or more detergents.

shellac - is a kind of varnish made by dissolving lac resin, secreted by the lac insect, which is found in India, with denatured alcohol. Shellac is useful in interior wood finishing when a quick-drying, light-colored, hard finish is desired. The resin has dielectric properties and can be compression molded into plastic parts.

shirts - are made with standard garment-making methods. See 10H. Also see *T-shirts*.

shoes - are made from a variety of materials. Leather predominates. The type used depends on the customers' demands and the leathers available. Cowhide and calfskin are most common but pigskin, horsehide and other leathers can be used. For high-style footwear, the hides from exotic wild animals may be employed. Synthetic leathers, fabrics, and some composition materials are often used. Heels and soles are often injection or compression molded (4C1 and 4B1) of natural or synthetic rubber.

The following operations are involved in making footwear from leather or synthetic substitutes for leather[1]: 1) cutting, which includes spreading and marking hides with methods very similar to those used when cutting pieces for cloth garments. Fabric and synthetic materials are spread in stacks and cut, multiple pieces at a time, as described in 10H1, 10H2 and 10H3. Leather hides may also be stacked and cut similarly or with steel rule dies (2c4a). For special, more limited production levels, leather pieces are cut individually with shears. Stacks of parts are bundled for later sewing or gluing. 2) stitching, assembling and sewing the upper portion of the shoe. Sewing of leather components is done on heavy-duty sewing machines similar to conventional industrial machines (10H4), but with larger needles and machine elements, and with coarser, stronger, threads. Some operations, particularly in decorative design work, are cycled automatically under computer control. Some sewing is done with the parts inside-out and, if the leather is stiff, the parts may be soaked in water to soften them so that they can be turned right-side out. 3) stock fitting, to prepare the sole. The sole may consist of only one, or up to three, layers. If more than one layer is used, bonding is the usual fastening method. 4) lasting, an operation that attaches the upper part of the shoe to a wooden form that is shaped like a foot. 5) bottoming, the attachment of the upper part of the shoe to the sole. Bottoming is achieved by one of three methods or a combination of them: sewing, adhesive bonding, or nailing which includes fastening with nails, staples, screws, or pegs. 6) heeling, the attachment of the heel and the shaping of it, if necessary. 7) finishing, the final production operation of polishing, removing the lasts, inserting and fastening inner pads, stamping the brand name, trademark, and size on the sole, 8) treeing - attaching laces, buckles or other closures, and final cleaning and inspection.

Leather boots, including those used for ice skates and in-line roller skates, slippers, and sandals are made by methods and process sequences that are similar to that described above.

shoes, athletic and ***sneakers*** - are all very similar although special athletic shoes are made for different purposes. Sneakers are normally simpler and lighter than shoes, with fewer parts and upper parts made primarily from fabric. Most athletic shoes are made from thicker material: woven fabric (often from plastic fibers), leather, rubber, and soft plastic upper parts. Athletic shoes normally have some stiffening and reinforcement to provide arch or ankle supports, internal plastic foam padding covered with fabric, and extra padding in critical areas. Both sneakers and athletic shoes have molded rubber or elastomer soles. Running shoes have extra support and cushioning on the insoles; basketball shoes are higher around the ankles and have reinforcement and extra cushioning in the ankle area. Athletic shoes for general gym purposes are a result of design compromises, and are usable in several sports, though not optimum for exclusive use in any one. There are also "fashion" athletic shoes, designed with attractive appearance as the main objective. Fig. S4 identifies the components of a typical running shoe.

The athletic shoe manufacturing process starts with the manufacture of the individual parts that will make up the shoe. Leather (often dyed white) and non-molded plastic parts are cut from sheet materials with the same basic methods as are used for leather shoes and garments. (See *shoes* above and Chapter 10.) Sheet materials (fabric, leather, and solid and foam plastic sheets) are stacked in multiple layers, and the stack is cut into parts. Some materials are cut with steel rule dies. The cut parts are bundled for later assembly. Most are sewn to other parts with heavy industrial and shoe-type sewing machines, but some parts are glued together. Soles and some other parts are injection, transfer,

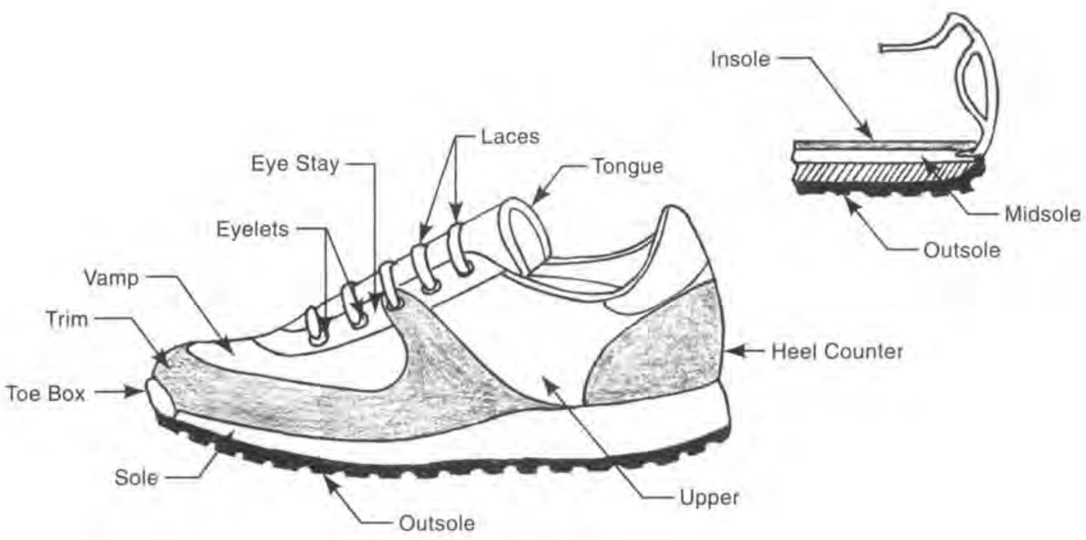

Fig. S4 The components of a typical running shoe.

or compression molded. Lace holes are punched, and eyelets are assembled and upset with eyeletting machines. The upper part of the shoe is sewn and bonded together as a subassembly. The subassembly includes stiffening members and cushioning, and the tongue. The upper is partially sewn to the insole, heated and wrapped around a last. It is mechanically pulled to tightly fit the last. Then, hot-melt adhesive is applied to complete the fastening of the insole and the parts are pressed together. Parts for the midsole, wedge, and outsole, are next bonded together and assembled with more adhesive to the upper subassembly on the last. Hot-melt adhesives are used, and heat to soften the adhesive is applied after the parts are aligned and pressed together. Holding and pressing continue until the adhesive cools. When cooling is complete, the shoe parts are securely bonded. Any excess adhesive is removed and the shoes are taken off the lasts, inspected and packed for shipment.

shortening - is made by the *hydrogenation* (12J3) of edible oils, almost always vegetable oils. Cottonseed, safflower, corn, and soybean oils are used. (See *oils, edible.*) Unsaturated fatty glycerides in these oils are converted to more saturated forms by hydrogenation, providing a more solid, less liquid consistency, improving the shelf life of the fat involved, and providing a more neutral flavor and odor. Some other ingredients may be added to aid moisture absorption, and retard the development of rancidity. Shortening adds tenderness to baked products. If shortening is not used, margarine (produced similarly), butter, or lard may be used to achieve a result that is similar or the same. (Also see *margarine.*)

shrinkproof (shrink resistant) fabrics - See 10E5a.

signs, neon - See *neon signs.*

silicon - See 13K1 for silicon refining.

silicon carbide - See *abrasives.*

silicones (silicone plastic resins, silicone oils, silicon rubber) - have, as their basic raw material, sand (quartzite or silicon dioxide, SiO_2). The silicon dioxide is reduced to metallic silicon as described in 13K1 and then is pulverized. The pulverized silicon and gaseous methyl chloride are reacted in the presence of a copper catalyst to produce a mixture of silane gases. These are condensed into methyl chlorosilane liquid. Fractional distillation of this liquid yields methyl chlorosilane, dimethyl dichlorosilane and trimethyl trichlorosilane. These are hydrolyzed with water to produce cyclic linear polymers. The dimethyl dicholorosilane produces silanol ($Cl_2Si[CH_3]_2$), which is unstable and condenses to form polydimethylsiloxane, the most common siloxane polymer.[1] Hydrogen chloride, a bi-product, is captured and used to make the methyl chloride needed for the process. Whether the polymer is an oil, resin, or elastomer is determined by controlling the size of the individual molecules, and the polymerization of adjacent molecules.[5]

Silicone oils are used as hydraulic fluids, for high-temperature lubricating oils, and to give water repellence to textiles, papers, and other materials. Silicone resins are used for electrical insulation and protective coatings. Silicone rubber is used in O-rings, seals, gaskets, and surgical implants, as a potting material for electronic devices, and for molds used to cast plastics and low-melting-temperature metals.

silicone rubber - See *silicones* above.

silicon single crystals - See 13K2.

silicon wafers (for integrated circuits) - See 13K1 through 13K4.

silk - is a fiber obtained from cocoons produced by silkworms. (The silkworm is not really a worm but is the caterpillar form of the mulberry silk moth.) Sericulture, the raising of silkworms, involves incubation of the eggs from the silkworm moth, raising and feeding the caterpillars and, most important, getting them to spin cocoons. Mulberry trees are planted to provide leaves that serve as food for the silkworms. Cocoons are made from one continuous filament. After the cocoons are harvested, the worms inside are killed (normally by heat), and the silk fiber is obtained from the cocoons by a careful process. The cocoons are placed in boiling water to dissolve sericin, the gummy material that binds the fibers together. The filaments are unwound from the cocoons onto a holder in an operation called, *reeling*. The filaments from 4 to 8 cocoons are joined and twisted. (This is called *throwing*.) Similar twisted filaments are combined to make a thread that is collected on a reel. (See *spinning*, 10B.) The resulting thread, raw silk, usually consists of 48 individual fibers. This thread is composed of unusually long fibers. (Shorter fibers that result from damaged cocoons and certain parts of the cocoons are made into a lower-grade silk that is spun into yarn.) One or more of the threads produced are twisted together again to make a still heavier thread that is suitable for knitting or weaving. (See Chapter 10.) Various treatments and kinds of twisting arrangements for these final threads determine which type of silk fabric will be woven. Further boiling of the yarn or fabric removes the balance of the gummy sericin, leaving the silk smooth, semi-transparent, and lustrous. Silk is used for clothing, lace, draperies, linings, and handbags.

silver - Silver occurs in nature as a metal and in combination with chlorine and sulfur. Most silver is obtained as a bi-product of the refining of copper, lead, and zinc sulfide ores. Antimony is also present in these ores. Silver also occurs in the metallic state in deposits where it is alloyed with gold. Recovery of silver from used photographic film and spent developing solutions is another source of the metal.

The sulfide ores are separated from other materials by flotation. After the copper and lead are removed, silver is usually recovered by furnace roasting the ore to convert the sulfides to sulfates, followed by chemical treatment to precipitate metallic silver[2] . Another method is to treat the ore with liquid mercury. The silver forms an amalgam with the mercury and then is separated out by distillation. Metallic silver that is found alloyed with gold is separated by leaching with a 35% nitric acid solution. Impure silver is most commonly refined electrolytically.

Silver is used in tableware, jewelry, electrical contacts, integrated circuits, electronic circuit boards, brazing alloys, and coins.

silverware - See *flatware.*

single crystals of silicon - See 13K2.

skim milk - See *milk, skim.*

soap - is made from animal or vegetable fat and an alkali. Some of the most-commonly used fats are beef tallow, cottonseed oil, palm oil, coconut oil, corn oil, fish oil, palm oil, olive oil, and soybean oil. Caustic soda (Sodium hydroxide - NaOH) is the most common alkali. Caustic potash (potassium hydroxide) is less common but also used. Other ingredients may be water softeners, fragrances, optical brighteners, colorants, and abrasives. Soap is the sodium or potassium salt of a fatty acid, formed when fats or oils such as these react with the alkali. Current soap manufacture is a continuous process that involves the splitting or hydrolysis of the fat at high pressure and temperature and with the aid of a zinc soap catalyst. This operation produces fatty acids and glycerin. These are later separated. The glycerin is drawn off from the mixture and is a useful by-product. The fatty acid, mainly stearic acid, is purified by distillation in a vacuum and is then reacted with caustic soda (NaOH) to produce sodium stearate - soap - and water. The water is removed from the mixture by decanting and distillation. (Stearic acid, $CH_3(CH_2)_{16}COOH$, is a solid wax-like material that is useful in making greases, paint dryers, rubber, cosmetics, and coatings, as well as soap.) Various special machines mold or extrude, cut and stamp the soap into bars, flakes or powder. Fig. S5 illustrates the soap-making process for aerated (floating) soap. Fig. S6 illustrates the manufacture of soap in milled bars.

sodium carbonate (soda ash)[1] - is an important industrial chemical used in making chemicals, paper, glass, soap, and detergents. It is made from salt brine by the Solvay or ammonia-soda process. Sodium chloride brine is treated with ammonia and carbon dioxide, and yields sodium bicarbonate and ammonium chloride. The sodium bicarbonate is then heated to yield sodium carbonate. The ammonium chloride is treated with lime (calcium oxide) and calcium chloride and ammonia result. The ammonia is reused in the brine treatment portion of the process; the calcium chloride is sold as a winter melting agent for snow and ice.

soft drinks - consist of water and flavorings (juice concentrates, fruit juices, or blends of other flavorings), sweeteners [sucrose (table sugar), high-fructose corn syrup, aspertame, or sacharin], and a number of other ingredients that may or may not be present in a particular drink. They are: carbonation (dissolved carbon dioxide), colorings, acidulants (citric, malic or phosphoric acid) and preservatives

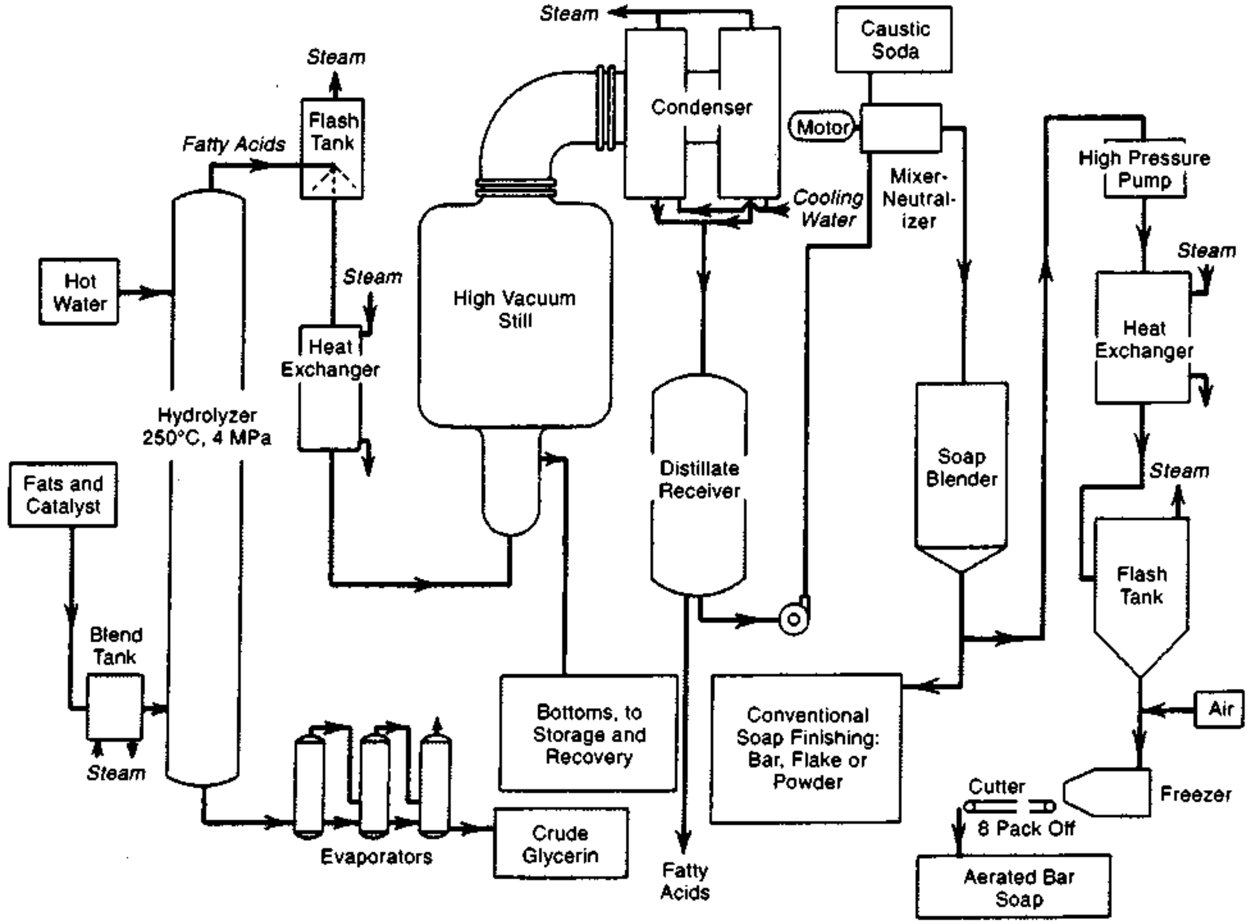

Fig. S5 The continuous process for the production of fatty acids and soap.(*The Proctor and Gamble Company.*)

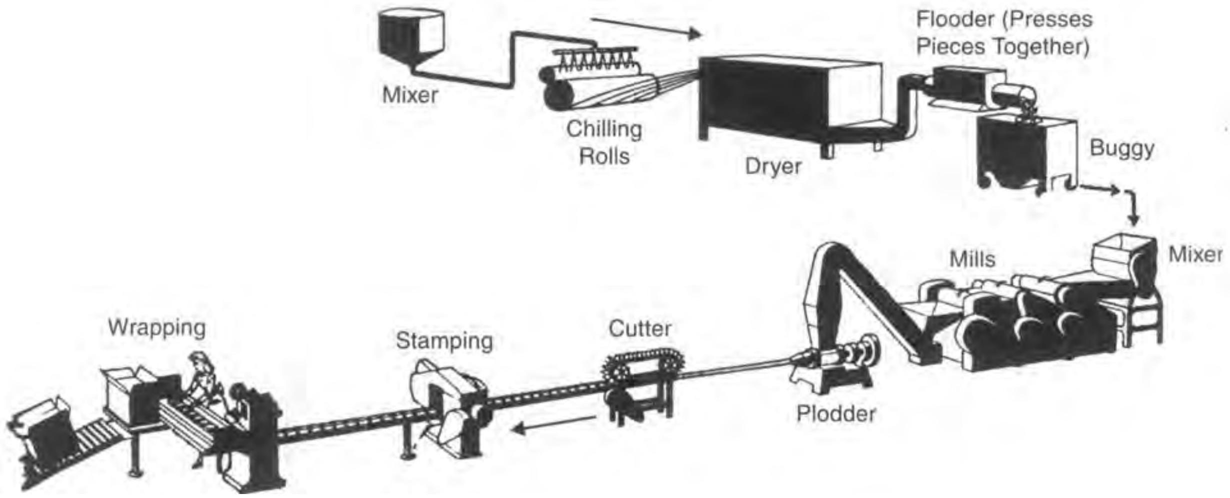

Fig. S6 The production of soap in milled bars. Milled soap undergoes a series of operations involving sets of heavy rolls or mills that knead and mix it, providing a uniform product. *(from Shreve's Chemical Process Industries, 5th ed., G. T. Austin, McGraw-Hill, New York, 1984. Used with permission.)*

(sodium benzoate, potassium sorbate). The water, even if it is good-quality municipal water, is treated before being used. The treatment typically involves chlorination or other oxidant treatment with chlorine, chlorine dioxide, lime, or ferrous sulfate. (Lime serves to remove dissolved calcium and magnesium bicarbonates and aids in the filtering of minute particles, including algae, if present.) The water is then filtered with both sand and carbon filters. The carbon removes any residual color or taste and chlorine.

The flavorings and other ingredients (except sweeteners and water) are often prepared at another location and shipped to the bottling location as one combination ingredient called, *syrup concentrate*. A first step at the bottling plant is to mix this concentrate with the sweetener and some water to produce the *finished syrup*. Once mixed and quality-checked, the finished syrup is mixed with additional water in a ratio of about 5 to 7 parts water to one part finished syrup. Except for carbonation, this is the finished beverage. Carbonation takes place in a reduced-temperature vessel, called a *carbo-cooler*, that is pressurized with carbon dioxide gas. The beverage liquid is sprayed into this vessel and it absorbs the carbon dioxide to provide the characteristic bubbly fizz of soft drinks. This is then the liquid that fills the bottles or cans. Bottling takes place as described in Chapter12, section L. If the drink is canned instead of bottled, the operations involving the preparation, washing, filling, and closing the cans are very similar to those involved when bottling takes place but the heat sterilization, described in Chapter 12, section G4, for canned foods, is not needed with soft drinks.

solar cells (photovoltaic cells) - convert energy from sunlight into electric power. The cells are made from semiconductors and fully conductive materials, employing methods that are similar to those used to produce integrated circuits and other semiconductor devices. However, the semiconductor materials in solar cells occupy large areas whereas most semiconductors in electronic devices are as small as possible. Typical cells are about 4 × 4 in (10 × 10 cm) in size. In the solar cell, light energy excites electrons so that they move from one layer to another through a semiconductor. The reaction takes place where an n-semiconductor layer meets a p-semiconductor. Electrons flow across the junction and to metal contacts near the top and bottom of the cell. The semiconductors are doped to provide "n" or "p" (negative or positive) conducting properties. (See doping, 13K3c.) Materials commonly used are silicon in single-crystal form (sawed into thin plates from a boule - See 13K2, 13k2a, 13k2b.), cadmium sulfide (CdS), copper-indium diselenide, gallium or gallium-indium phosphide, cadmium telluride and gallium arsenide. Polycrystalline silicon is also used; it is less costly but less efficient. Most of these materials, when used, are applied as thin film coatings (See 13K3a.) Amorphous silicon is polycrystalline material coated by chemical vapor deposition (13K3a3) on glass or other substrates. This form of silicon is still less efficient but is inexpensive and is used in watches and pocket calculators where it supplies sufficient operating current.

Solar cells are used to power calculators, watches, electronic and electrical devices in remote locations, satellites, and spacecraft. The arrangement of components in a typical solar cell is illustrated in Fig. S7.

solder - normally refers to alloys with low-melting temperatures that are used to make electrical and electronic connections, for joining plumbing pipes, and in other fastening applications. These alloys are often called *soft solders*. Alloys of lead and tin are most common but antimony, bismuth and cadmium are also employed. The lead-tin eutectic, (63% tin, 37% lead), and similar alloys are common in the production of printed circuit boards. They are produced by melting tin and lead together and thoroughly mixing the melt. Lead-free solders, used for connecting water pipes, and increasingly in electronics, are principally tin, alloyed with copper or silver. Alloys with higher melting temperatures, above those of the tin-lead solders are called *hard solders*. These are often silver alloys, "silver solders", alloys of silver, copper, zinc, and phosphorous. (Also see 7A and Chapter 13.)

solder paste - See 13E.

solder preforms - See 7A1b.

solder powder - See 13E1 through 13E6.

spandex[4] - is a flexible stretchable fiber made from polyurethane plastic. The basic material is made by reacting diisocyanates with long-chain glycols (usually polyesters or polyethers). The product of this reaction is then chain-extended or coupled using glycol, a diamine or sometimes water. The resulting polymer is dry spun into fibers. Rigid and flexible segments are alternated in a typical spandex fiber. Used with other fibers, spandex is made into surgical hose, foundation garments, sportswear, swimwear, and other items where elasticity is important.

spark plugs[9] - consist of four basic parts: the outer metal shell, the ceramic insulator, the central electrode and the side electrode. There is also a small terminal nut to secure the high voltage wire to the plug, and a copper ring gasket to seal the plug to the engine cylinder head. See Fig. S8 for a section view of a typical plug. All these parts are made with high-production, continuous-flow, dedicated equipment.

The outer metal shell supports the plug and provides an electrical ground and mechanical screw thread connection to the engine's cylinder head. It is made from low-carbon steel and is first formed by the cold extrusion process (2I4). Knurling (3A1f), thread rolling (3E7), and some finish machining (3A2d) take place. Finishing is by either a black oxide surface treatment (8E4), or electroplating with zinc (8C1).

The ceramic insulator separates the high voltage electric current from grounding elements. It is made from alumina mixed with other ceramics, and is formed by a sequence of ceramics processes: pressure casting (5B8a), drying (5B13), form cylin-

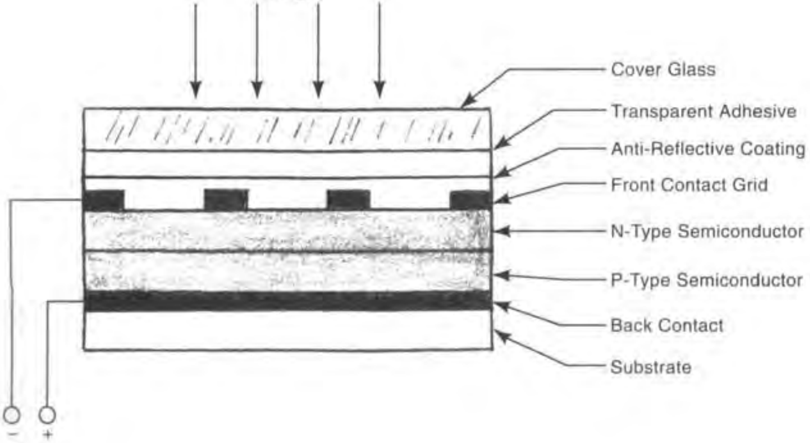

Fig. S7 A typical simple solar cell shown in cross-section. Light falling on the cell passes through the glass or plastic cover, an anti-reflective layer, and past a front contact grid to the semiconductor layers where it creates an electron flow if the top and bottom contacts are part of a circuit.

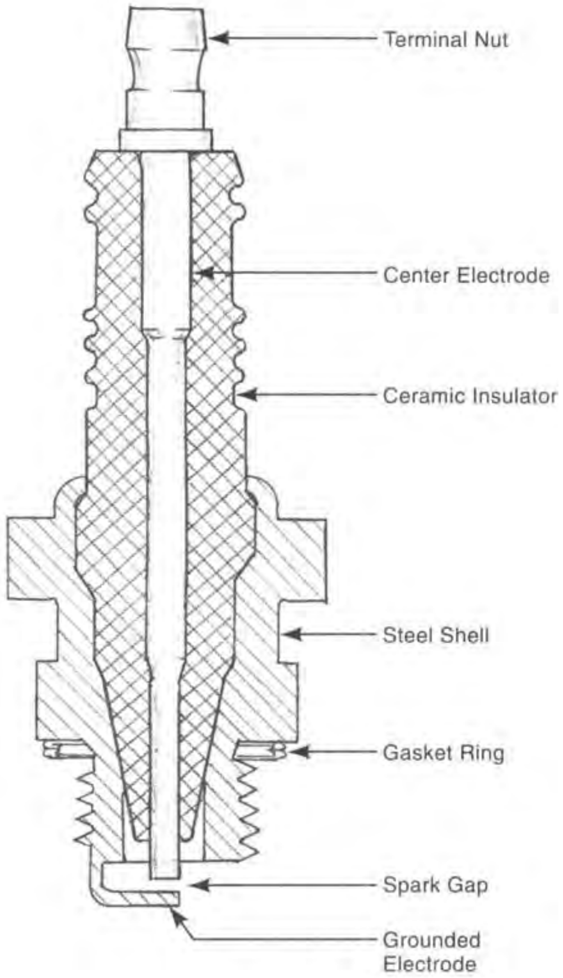

Fig. S8 A typical spark plug for an internal combustion engine.

drical grinding (5B14), firing (5B16), printing, and glazing (5B15).

The central electrode conducts the high voltage charge to the spark gap. It consists of two parts, the electrode at the lower end - made from a high-nickel alloy - and a low carbon wire that forms the top terminal of the plug. Before the two are electrically butt welded together, the top portion is formed to the shape needed by cold heading; then threads are rolled at that end.

The side or grounding electrode, also made of high-nickel alloy wire, provides the other conductor for the spark gap. The wire is fed from a coil, straightened and resistance welded to the outer shell of the plug. It is bent to near the position needed for the spark gap.

Assembly of the plug is also an automatic operation. Key portions of the operation are the press fits of the central terminal/electrode to the center hole of the insulator, and of the insulator to the metal shell. These components must withstand the internal engine compression pressure of 2000 psi (14 MPa). The edge of the metal shell of the plug is crimped around the insulator to complete the seal. The lower end of the electrode is trimmed, and the grounding electrode is further bent to provide the specified spark gap. The fastening nut is threaded onto the central terminal, and the copper ring gasket is assembled to the plug shell and crimped into place. The finished spark plug is then packed into an individual box which, in turn, goes into a carton of plugs for shipment to customers.

spices - are obtained from the flowers, seeds, fruits, leaves, bark, stalks, bulbs or roots of plants, usually from tropical or subtropical regions. Spice seeds and herbs (from plant leaves) are also called spices. Source materials for spices are usually dried and, in for many spices, ground to a fine powder in roll mills. They then may be coated with a water soluble gum or dextrose to preserve their flavor. Popular spices and their sources are as follows:

allspice (pimento) - is made from the dried, unripe berries of a tree, Pimento dioica or Pimento officinalis, which grows in the West Indies.[14]

anise, aniseed - is the seed of the Pimpinella anisum, a member of the carrot family. It has a licorice-like flavor. It is used in baked goods and confections, and the liquors anisette and absinthe.

basil - is the dried leaves of the herb, Ocimum bascilicum, a small bushy plant. Egypt is the main source, followed by the U.S.A. The leaves are dried and sold whole, or ground. Basil is used in tomato sauce, pizza, pestos, cheeses, and Italian seasonings.

bay leaves (sweet laurel) - are the dried leaves of the evergreen bay leaf laurel shrub or tree which grows in California and Turkey. The leaves are dried and used whole in soups, stews, meat, and vegetables as they are cooked. They are not left in the food when it is served.

cayenne pepper - is a very hot pepper that is made from the deep red to orange colored fruit of a small Capsicum (chili pepper) plant. The fruit is dried and then ground.

celery seed - is not from the vegetable celery plant but from the seeds of its relative, Apium graveolens, which have a similar flavor and aroma. The very small brown seeds are dried and sold whole or are ground. Most come from India and China. Celery seed is used in pickling, in salad dressings and in cooking vegetables, soups, breads and tomato items. Celery seed is the main ingredient of celery salt.

cinnamon - is the dried bark of various tropical evergreen laurel trees, Cinnamonum, made into rolls, sticks or powder. The inner bark is pressed, rolled and dried and most is ground to powder form. Sri Lanka is the source of true cinnamon, but most of that used in North America comes from Vietnam, China, Indonesia, and Central America. Cinnamon is used in stewed fruits and other desserts, breakfast rolls, cakes, pies and cookies.

clove - Cloves are the dried, unopened buds of an evergreen tree, Zyzygium aromaticum, that grows in some African countries and Indonesia, Zanzibar and Madagascar. Cloves are sold both whole and ground. They are used in ketchup, Worcestershire sauce, meats, salad dressings, and desserts.

garlic - comes from the bulb of allium sativum, originally from Asia and now grown widely. It is related to the onion.

ginger - comes from the bulb-like underground stems of the herb, Zingiber officinale. It originally grew in the Orient but now is also raised in Nigeria and Jamaica. The root is dried and ground into ginger powder, sold as root ginger, or as an essential oil that is extracted to make ginger ale and other beverages, chutneys, and sauces.[5]

mustard - One strong mustard comes from black mustard, Brassica nigra, a tall plant that grows in Israel. The seed is ground into powder and mixed with lemon juice, wine or vinegar, which preserves the flavor.[5] Another variety, brown mustard, has a less pungent flavor. The common American mustard is made from the still milder seeds of the white mustard plant, ground into a powder, and mixed with vinegar, sugar, and tumeric as a coloring agent. There are other varieties of mustard made from these three types of seeds, made into a powder and combined with other ingredients. Ingredients that may be used include grape, lemon or lime juice, beer, vinegar, cider, wine, salt, and various herbs. Mustard is used in spice mixtures for seafood, meats, and sauerkraut. It is an ingredient in mayonnaise, and salad dressings and in flavoring barbeque sauces.

nutmeg - is the round, brown, wrinkled seed of a fruit similar to an apricot, of a tropical evergreen tree, Myristica fragrans. The tree is native to the Moluccas, but now grows in Grenada.

parsley - the dried leaves of the herb, Petroselinum crispum. Sources are the U.S.A., Canada and Europe. Parsley is used to add color and a pleasing appearance to soups, stews, omelets, and other cooked dishes and to bring out the flavor of other herbs.

pepper - Common black pepper comes from Piperaceae, a vine-like perennial plant, which is grown in many countries, notably Brazil, Indonesia, China, Burma, Vietnam, the Philippines, and Malaysia. The plant yields red berries that are harvested and boiled in water for approximately 10 minutes. They turn black and are dried to become common black peppercorns. They are sold in that form but are also ground into a coarse powder in pepper mills.

rosemary - is the dried leaves of the evergreen, Rosmarinus officinalis. The leaves very small and resemble curved pine needles. They are hand-harvested. Most rosemary is supplied from France, Spain and the former Yugoslavia. It is a powerful spice and is used sparingly. Meat, fish, poultry and vegetables are seasoned with it, especially in Italian and other Mediterranean cooking.

saffron - comes from stigmas of saffron crocuses that are grown in Spain, the Middle East and Italy. It is used to both color and flavor food dishes.[5]

sage - is made from the dried leaves of the plant, Salvia officinalis, a member of the mint family, which is grown in Central Europe. The most common form is "rubbed sage" in which the leaves are given a minimum amount of grinding and then are passed through a coarse sieve. Another form uses the leaves cut into smaller pieces. The spice resembles rosemary and is strongly aromatic. It is used in Italian and Greek meat and poultry dishes. Most supplies come from Southeastern Europe.

sesame seeds - grow as part of the annual plant, sesamum indicum. The seeds are harvested by hand because they would otherwise scatter.

thyme - comes from the leaves and sometimes the whole plant of Thymus vulgaris, a small flowering perennial plant. There are several varieties but that with a strong lemon-like flavor is most common. The leaves are harvested just before the plant flowers. The plant originated in Southern Europe, and now grows in Eastern Europe and the

United States as well, but most U.S. thyme is imported from Spain. The leaves are very small, less than 1/4 inch long, and are dried, and often ground. Thyme is used in cooking meat, fish and poultry.

vanilla - historically comes from the fruits (beans) of a climbing orchid-family plant, Vanilla planifolia, which requires special hand pollinating. The beans require special curing, and the vanilla flavoring is then extracted. Much vanilla is now synthesized from the hydrolysis of wood.[5] (See *vanilla.*)

Spices are utilized to add flavor, aroma and piquancy to foods. Spices are used in making sausages and other processed meat, salad dressings, sauces, prepared mustard, pickles, preserves, salad dressings, cookies, confections, cakes and beverages.[5]

spirits, distilled - See *distilled spirits.*

sporting goods - See *bats, baseball; baseballs; footballs; tennis balls; golf clubs; golf balls; fishing rods.*

springs - Fig. S9 illustrates several kinds of springs. Most are made from high-carbon spring steel, hardened (8G3) and either annealed (8G2g)

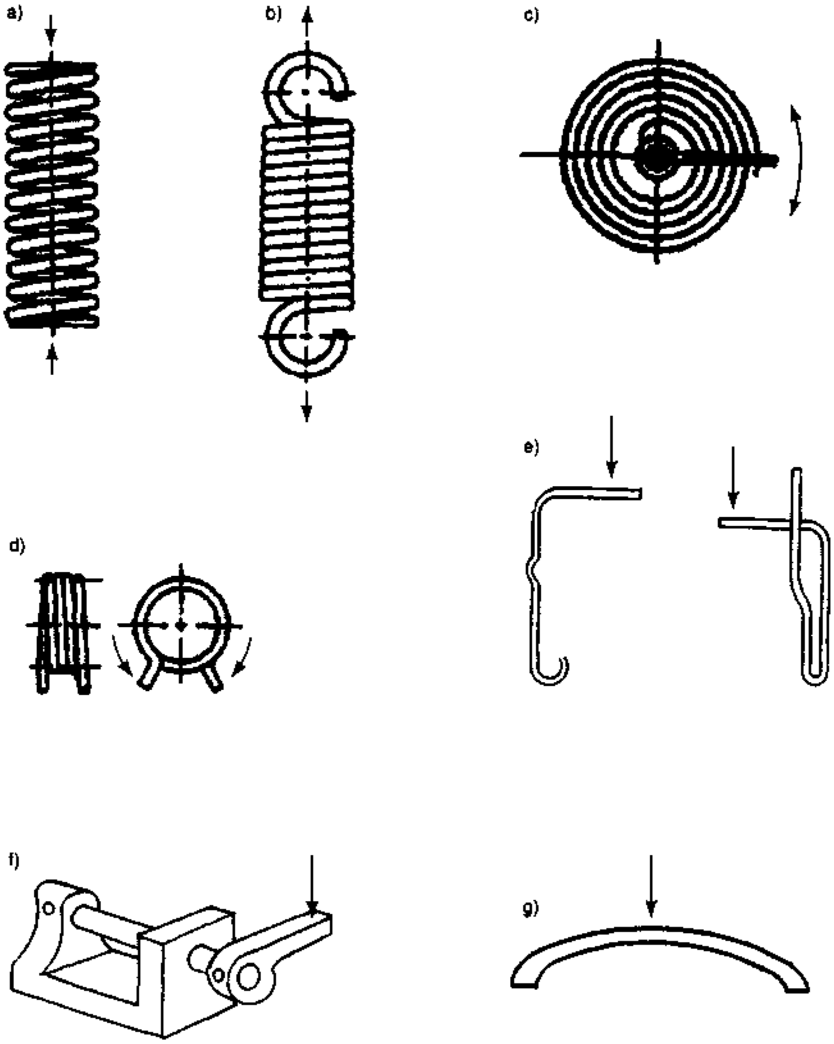

Fig. S9 Different kinds of springs: a) helical compression spring, b) helical extension spring, c) hairspring (for clocks and watches), d) helical torsion spring e) non-helical wire springs, f) torsion bar spring, g) flat spring.

or tempered (8G2f) before forming. Stress relieving (8G2d) may follow forming. Common grades used are 1050 (G10500), 1075 (G10750), and 1095 (G10950). Stainless steel types 301 (S30100), 302 (S30200) and 1.7-7 PH (S17700) are used where corrosion resistance is necessary. Phosphor bronze and beryllium copper are used for springs requiring high electrical conductivity. Springs are used to absorb impact, reduce vibration, provide stored energy for clocks, watches, and door closers, and for weighing with spring scales.

helical springs - In mass production situations, compression, extension and torsion helical springs are wound from coiled spring wire on automatic spring coiling machines. Automatic spring coilers use one or more pairs of feed rolls to feed a predetermined length of straightened wire against a coiling point that imparts a curvature to the wire. A stationary arbor is used to hold the coil during forming. The coil is separated from the feed wire by shearing. For low-quantity production, engine lathes can be used. The wire is fastened to an arbor that is held in the chuck of the lathe. As the arbor rotates, the wire is fed from between two wood blocks on the lathe's cross slide and winds around the arbor. Various hand tools are used to form the ends and cut off the wire.

spiral springs - are wire or strips of sheet material coiled in a spiral pattern in a flat plane. Spiral springs are used to provide the power to drive clocks and watches, and, in high-production, are wound on special machines.

non-coiled wire springs - are made on four-slide machines (2G2). Paper clips are one example, but many products have wire parts with a spring function.

torsion bar springs - are bars set so that they can twist. One end is anchored and the other is free to rotate. Torsion bars are made from suitably heat-treated metal bars by conventional metal forming and machining methods.

flat springs - include cantilever and beam types and, when multiple layers are involved, leaf springs, such as those used in automobiles. These types of spring are blanked and formed from high carbon steel and other metals having a high yield point, with methods almost identical to those used for blanking, piercing and forming low-carbon steel and other metals. With hardened spring materials, higher press forces are required, tooling must be more wear-resistant, and greater clearances between punch and die are normally employed. (See sections 2C and 2D).

stained glass windows - Rolled glass (5A3g), that has been colored by the addition of metal oxides in the batch (5A1a1), is hand-cut to the size and shape desired and assembled with strands extruded (2A3) from lead alloy. (The extruded strands have lengthwise slots to accept the glass.) Junctions of lead strands are soldered with a high-lead solder.

stainless steels - See *steels, stainless.*

stain-release fabrics - See 10F5d.

stamps, postage - In the U.S., stamp designs and other decisions about stamps are made with the help of a Citizens' Stamp Advisory Committee. Artists are hired for the art work needed for new designs. Plate-making and printing are then carried out by the Bureau of Engraving and Printing, or by qualified government vendors. Printing is by either the offset lithography (9D2) or the intaglio (rotogravure) (9D3) processes. Paper in rolls, precoated with adhesive on one side by the paper supplier, is fed to the presses. Perforations are made in line with the printing by suitable stamping dies with one small punch for each perforation. The printed and perforated paper is then cut into sheets as part of the same operation. Other countries use similar methods with varying degrees of automation and may use watermarked or other special papers.

starch[4] - is a common natural substance, a complex carbohydrate, produced by plants, and a major element in the human diet. Chemically, starch is based on the formula $(C_6H_{10}O_5)n$ where n ranges from 250 to over 1000.[4] Most starch produced in the United States comes from corn, but rice, wheat, potatoes, arrowroot, and tapioca are other significant commercial sources. In addition to each use in foodstuffs, starch is used in textiles, paper, adhesives, paints, insecticides, soaps, explosives, and as a basis for corn and other sweeteners. Corn starch manufacture has the following sequence: 1) Corn kernels are cleaned 2) They are soaked in warm water for two days to weaken the hulls and soften the gluten. 3) The softened kernels are processed by equipment that uses two studded steel plates, one rotating and the other stationary, to break the kernels but not crush the corn germs. 4) The corn germs are separated from the hulls in special equipment that uses centrifugal action on the kernels in water. 5) Oil is extracted from the germs (See 11C3). 6) The heavier starch is separated from the gluten by "hydroclone" machines. 7) The starch is dried and is then ready to be sold. The major use for corn starch is the production of corn sweeteners. If used for other food or commercial purposes, starch is processed through other operations that modify it physically or chemically.

steel - Three prime processes are used to produce steel from pig iron: the basic oxygen process, the open hearth process, and the electric furnace process. All these processes burn out the excess carbon and impurities from the pig iron.

The ***basic oxygen process*** - like the earlier Bessemer process - utilizes a pear-shaped furnace that is turned sideways for charging and pouring, and upright for processing the charge. The charge consists of molten or solid pig iron, scrap steel and iron, lime (CaO), and flux. The scrap material acts as a coolant to prevent the furnace temperature from rising too high. After charging, the furnace is tilted upright and an oxygen lance is lowered into it from the top, with the water-cooled tip about 6 ft (2 m) above the level of the charge. Oxygen is blown into the furnace through the lance at very high speed. The oxygen churns the charge and causes the carbon and impurities to burn (be oxidized). A carbon dioxide/nitrogen mixture may be blown from tuyeres at the bottom of the furnace to promote mixing of the charge. Oxygen may be also introduced at low pressure from low-placed tuyeres. Excess carbon escapes from the furnace as carbon monoxide and carbon dioxide gases; the impurities in the charge (phosphorus, silica, and manganese) form slag. The operation is rapid and 275 metric tons of steel can be made in an hour[5]. Fig. S10 illustrates a basic oxygen furnace schematically.

The ***open hearth process*** (1A6) uses regenerative preheating of fuel and air used for its combus-

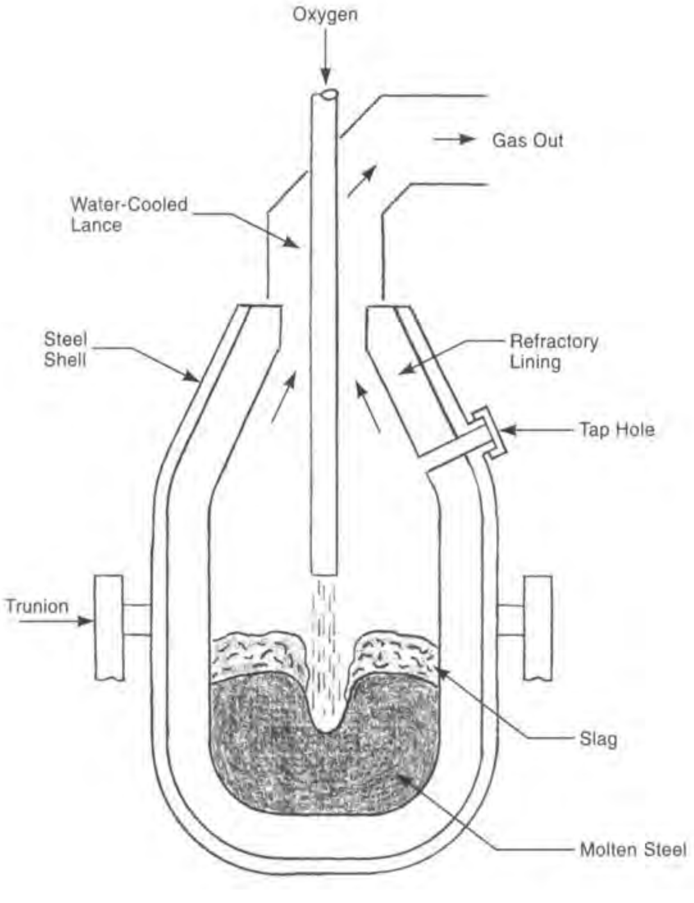

Fig. S10 A basic oxygen furnace for steelmaking.

tion to hold the full furnace charge to a temperature between 2800 and 3000°F (1540 and 1650°C) - well above the melting point of iron (2500°F - 1370°C) - for a prolonged period. The charge consists of pig iron, either solid or molten, or portions of both, scrap steel, iron ore (to provide additional oxygen), and limestone flux and fluorspar to add fluidity to the slag. The carbon in the iron is gradually oxidized, and impurities such as silicon, manganese, phosphorus and sulfur, react with the limestone to form slag. When the carbon content in a measured sample has reached the desired level, the furnace is tapped into a large ladle (set below the furnace level), and the molten steel is poured into molds to make large ingots for further processing. Typical production from open hearth furnaces is about 100 metric tons per 11 hours.[5]

Electric furnace steelmaking uses the electric arc furnace (1A2) to provide the necessary heat for melting and refining. The furnace is closed to the outside atmosphere which, together with the use of electric heating, allows tight control over the refining conditions. Because of the more rigid control, the electric arc process is particularly useful when high-grade alloy or stainless steels, with their more exacting specifications, are to be made. The charge metal usually consists largely or completely of scrap iron and steel, but the scrap is first analyzed for its content and unwanted alloys are excluded from the charge. Small quantities of dry lime and iron ore are included, to assist in the removal of impurities and unwanted carbon. The electric arcs provide the necessary heat but an injection of pure oxygen at the beginning of the process shortens the time required to reach operating temperature. Electric furnace steelmaking from scrap material has become a common process for smaller steel mills making high-quality low-carbon steels.

In all steelmaking processes, deoxidizers may be added to the raw steel to remove dissolved oxygen from the molten metal. Aluminum and ferroalloys react with the oxygen, and the resulting oxides precipitate from the steel. Other treatments may also take place after the molten steel has been tapped from the processing furnace. This step, called *ladle steelmaking*, produces higher-quality steel for specific applications such as deep-drawing.

The finished steel is cast into ingots. (However, methods have been developed for processing the steel into useful forms directly from the molten state.) Ingots are reduced to billets, blooms, or slabs, and then made into semi-finished or finished shapes (I-beams, rails, bars, angles, channels, tees and other cross-sections, plates or sheets) by any of several hot-forming operations. These include hot rolling, which involves passing the steel through sets of rollers that are shaped to produce the cross section wanted. After rolling, the workpieces are usually pickled by immersion in warm, dilute sulfuric acid to remove scale, and are then oiled. Cold drawing and cold rolling may occur afterward to produce cold-finished steel. Further finishing operations may include some machining, further pickling, grit blasting, water washing, and immersion in a slaked lime solution. Stress-relieving, annealing, and normalizing treatments may be carried out, depending on the application intended for the steel.

Fig. 12 (*iron*) shows the entire iron and steel making operational sequence including the three alternative steel-making methods. Also see *ultra-high strength steel.*

steels, stainless - are alloys of iron and 10 to 30% chromium, often with sizable amounts of nickel. Manganese, silicon and molybdenum are also often present. Stainless steels gain their corrosion resistance from a chromium oxide film that forms on their surface and is non-porous and self healing. 12% or more chromium is required for this effect.

After initial melting and alloying in electric or basic oxygen furnaces, stainless steel is refined in another vessel with the main purpose being the reduction of carbon content. An argon-oxygen process is usually used, with a number of different possible ratios of these two gases to oxidize carbon without oxidizing chromium. With this process, high-carbon ferrochromium can be used as a raw material.

Common applications are food processing equipment, table flatware, surgical instruments, aircraft and spacecraft.

structural composite lumber - See 6F7.

structural foam plastics - See 4C3.

styrofoam - is polystyrene expanded to 42 times the original size[2]. It is used, usually in panel form, as a cold-temperature insulation. The panels are made by extrusion, most commonly with a dual, tandem extruder system. The first extruder heats and mixes the polystyrene with a nucleating agent, a fine powder of talc or other material, with small amounts of other materials. The output of the first extruder is passed under pressure to a second extruder, sometimes called a cooling extruder, where the liquid or gaseous blowing agent is injected. The blowing agent is usually a blend. Several key materials that may be used include: pentane, carbon dioxide, butane, and HFC-152a[15]. The blowing agent is kept under compression as it is mixed into the cooling resin. At the nozzle of the second extruder, the blended material passes through a shaped die into the open atmosphere where the blowing agent expands, changing the extrudate to a foam. Often, an annular die is used, creating a tube of foamed polystyrene. The tube is slit and the foamed material is flattened to thick sheet or slab form. Slabs are further cooled and cut to standard lengths.

sugar - Sugar cane is the prime source for sugar, though sugar beets are another source, and sweeteners are made from corn and are widely used in canned beverages. Cane sugar stalks, after they are harvested, are washed, chopped, crushed, and shredded to remove the sweet liquid they contain. Water sprays dissolve additional sugar from the stalks. The liquid thus obtained contains some impurities. These are removed by screening and then heating the liquid and adding calcium hydroxide (lime) that causes the impurities to settle out from the liquid. Carbon dioxide is bubbled through the liquid to remove the excess calcium hydroxide. The settled matter is separated by filtration, but is processed separately to remove the sugar it contains.

The liquid filtrate is then pumped into large evaporator tanks where it is heated sufficiently to boil off most of the water. The liquid, at this point, is thick and syrup-like. Not all the water can be removed at this stage, however, because doing so may overheat and scorch the sugar. The balance of the water is removed by a combination of vacuum and heat. The vacuum reduces the boiling temperature of the syrup enough so that it does not scorch.

Removal of additional water causes the sugar to crystallize. The mixture is placed in a centrifuge to separate the crystals from the remaining syrup. The sugar crystals at this point are yellow-brown in color and are referred to as raw sugar.

The raw sugar is refined further to yield common white table sugar. The crystals are first subjected to a water rinse that flushes off some surface impurities from the crystals, which are then dissolved again in water. The mixture is filtered to remove further impurities, and becomes a colorless, clear liquid. The evaporation is repeated to form white crystals that again are separated centrifugally. The crystals, now solid sugar, are conveyed to drying drums where heated air removes any remaining moisture.

Remaining syrup from the evaporation operations may undergo rinsing, dissolving, filtering, and evaporating several times to produce additional white sugar crystals. Syrup that remains after several cycles is used to make brown sugar. The final syrup is blackstrap molasses.

suits - See manufacture of clothing (10H).

sulfuric acid - has wide industrial use. It is the most heavily-produced product of the chemical industry[1]. A major usage is the production of phosphate fertilizers. It is also used in many chemical processes, in ore processing, petroleum refining, steel pickling, pulp and paper processing, and in making rayon, paints, pigments, and storage batteries. The contact process - with vanadium catalysts and double absorption - is the prime one for sulfuric acid manufacture. Sulfur and air are the raw materials. The sulfur is burned to produce sulfur dioxide, SO_2 and this is oxidized to form sulfur trioxide, SO_3. The reaction is reversible, and takes place with catalysts (iron or vanadium oxide and platinum) at a temperature between 750 and 1020°F (400 and 550°C). These oxidation reactions are exothermic. The heat generated is utilized to facilitate the reactions and for other heating purposes. The sulfur trioxide is passed through liquid sulfuric acid that absorbs it in the reaction: $SO_3 + H_2O \rightarrow H_2S0_4$. Water and dilute sulfuric acid are added continuously to maintain the correct concentration of the finished acid, usually about 95%. Environmental concerns with escaping SO_2 have led to the use of the double absorption process which captures the stack emissions and absorbs SO_2.

superconductors - are materials that can carry electrical current with no significant resistance. They must operate, however, at temperatures well below zero Fahrenheit - near absolute zero - and must be within a critical magnetic field. The metals columbium, lead, iridium, mercury, tantalum, tin, and vanadium, and the alloys niobium-germanium, columbium-tin, columbium-titanium, and lead-molybdenum-sulfur, have such a property and are drawn into wire or otherwise fabricated into other shapes as needed for the application. Cooling is with liquid helium, which exists at 4.2 K (–452°F or –269°C), to maintain the necessary temperatures. Certain ceramics can operate with superconductivity at the higher temperature of less costly liquid nitrogen 77 K (–321°F or –196°C). (Liquid nitrogen is also a more effective cooling agent than liquid helium.) Yttrium-barium-copper-oxide (YBCO) compound is one such ceramic material. In 1988, a thallium-barium-calcium copper oxide with a critical temperature of 125 K (–235°F or -148°C) was discovered.[5] However, these materials are very difficult to fabricate into wire coils or other needed shapes. Making large superconductor devices of these materials necessitates that the whole structure has essentially the same crystal orientation.

There are two classes of devices that use low-temperature superconducting materials: 1) Small-scale devices that use thin film production techniques based on those used for integrated circuits and other semiconductor equipment. Applications for such superconducting components are ultrasensitive magnetometers, switching apparatus and frequency standards. These units operate at the 4 Kelvin temperature range that requires liquid helium cooling. 2) Large-scale devices utilize niobium-tin, niobium aluminum, niobium-germanium, and vanadium-gallium, and operate at higher temperatures of 20 K (- 423°F or -253°C), still requiring helium as a coolant. Medical MRI systems are the major application but other uses are limited and involve fusion research and the storage of electrical energy for use in peak periods. The MRI devices incorporate closed cooling systems that minimize the amount of liquid helium that must be added to the system.

Efforts to join small pieces of YBCO material and maintain a suitable crystal structure have met with some success. When a thin layer of thulium-barium-copper-oxide (TmBCO) is placed between two pieces of YBCO to be joined and the joint is heated to the temperature half-way between the melting points of the two materials (TmBCO melts about 20°C lower than YBCO.) the TmBCO liquifies and follows the structure of the YBCO as it cools and crystallizes. Superconductivities of 95% of that of YBCO are reported for the combined structure.[28]

A recent development is the use of magnesium diboride (MgB_2) which becomes superconductive at 40K (–388°F or –233°C). Wires of this intermetallic material can be made by reacting boron filaments with magnesium vapor at about 1830°F (1000°C). Development is on-going to make practical sheathed electrical conductors. The 40K temperature can be provided by liquid neon, liquid hydrogen or closed-cycle refrigeration.[30]

swiss cheese - See *cheese, Swiss.*

switches, electrical - See *electrical switches.*

synthetic fibers and fabric - See 10A2, 10B6, 10C and 10D.

synthetic lumber (composite lumber) - See 6F9.

synthetic rubber - See 4O2.

T

T-shirts - are made from knitted fabrics (10D) using yarns of cotton or polyester, or a blend of cotton and polyester. The fabric for the body is usually knitted on circular knitting machines so there is no seam on the side of the garment. Neckbands for crew-neck type shirts are also usually knitted on circular machines. Neckbands are usually one-inch rib knits. The steps involved in making T-shirts is the same as that for other garments as described in 10H. Spreading of the fabric (10H1), marking (10H2), cutting (10H3), and sewing (10H4), are all involved. Due to the high quantities usually involved, and the standard, fairly simple construction of T-shirts, these operations tend to be automated. Overedge stitching is common for seams, providing stretchability of seams comparable to that of the fabric. Sleeves are hemmed before the edges are sewn together, and before the sleeves are joined to the garment body. The body is hemmed at the bottom, usually with an overedge stitch. Sleeves, neckband, label and, sometimes, pockets, are attached. Pockets are sewn with semi-automatic pocket setting machines. When decoration is part of the factory production, it is done by screen or stencil printing (10G2e). Finished T-shirts may be steam pressed (10H5) and are then folded, wrapped, and packed (10H6).

tableware, plastic - Plastic knives, forks, and spoons are invariably injection molded (4C1).

For the most common picnic-type of tableware, the material used is polystyrene.

tableware, metal (silverware) - See *flatware*.

tacks - are cold headed (2I2) from low carbon steel wire (or, occasionally, aluminum wire), on single-station heading machines. These machines produce a flat head and cut the shank with a sharp point, using a special pair of cutters. The tacks are given a barrel-plated (8C3) zinc finish followed by a bright chromate sealer, or with a black-oxide finish (8E4). Packing is by weight on automatic equipment. Thumb tacks and round-headed tacks are made on special machines that feed both a strip of sheet steel and a wire from coils. The machines blank and form the strip to make the tack head, and cold head the wire to form the pointed shank. Then they join the two parts at a central hole in the head and upset the shank to permanently rivet the two parts together. Finishing is most commonly by brass or nickel barrel electroplating.

talcum powder, baby powder - is talc, magnesium silicate, finely ground and in the form of $3MgO{\cdot}4SiO_2{\cdot}H_2O$. Talc is a soft mineral, a form of soapstone. In talcum powder, it is mixed with a perfume. Many baby powders are now made with a mixture of talc and cornstarch instead of all talc, or with essentially all cornstarch but with some tricalcium phosphate (an anti-caking agent). In addition to its use in toilet preparations and cosmetics, powdered talc is used as a filler in plastics and paper.

tanks, fuel for automobiles - Blow-molded plastic automotive fuel tanks are a relatively recent development. The extrusion blow-molding process (4F1) is used. Metal fuel tanks are blanked (2C4), deep drawn (2D5b), trimmed (2C6), and seam welded (7C6b) from terneplate sheet - steel coated with a lead/tin alloy. (Because of health concerns from the high lead content, development is underway to substitute tin/zinc or another non-lead alloy.)

tanks, plastic, storage for chemicals - Plastic storage tanks for chemicals may be made with a variety of processes, depending on the design, size and application of the tank. Cylindrical tanks often are made with filament-wound reinforcement of thermosetting resins (See 4G7.) or with a resin-impregnated, tape-placement process. Tanks requiring large open tops, or large covers, are often hot gas welded (4L11) of vinyl panels, which have been made by calendering (4J), or extrusion (4I1). If larger quantities are required, the reaction injection molding process (4C3b), low pressure injection molding (4C3a), or casting (4H2) of structural foam, may be used to make the tank in one piece.

tea - is made from the leaves and buds of the shrub, *camellia sinensis* or *thea sinensis* that grows in a warm, subtropical, humid climate. Young leaves and leaf buds are picked. *Green tea* is made by drying the leaves in sunshine or artificially. They are processed almost immediately to reduce oxidation and prevent fermentation. Green tea is a pale green-yellow color that is slightly bitter and mild. Black tea is made by first only partially drying the leaves, allowing them to ferment and then fully drying them. The leaves are rolled to break them and release the juices. Black tea is a dark amber-colored beverage, full flavored, but not bitter. Both green and black teas contain caffeine and a strong antioxidant and anticarcinogen. There is also a semi-fermented tea called "oolong". Packaging tea in bags is an automatic operation with special equipment.

tea, instant - is made by concentrating the liquor produced in making tea from leaves and leaf waste, and drying this concentrate to form powder. The drying process is freeze-drying (12H5), vacuum-drying (12H1), or spray-drying (12H2).

teflon - is polytetrafluoroethylene plastic (PTFE), which has a structure somewhat similar to that of polyethylene. PTFE is made by polymerizing the monomer, tetrafluoroethylene, a gas at normal temperatures, by free radical vinyl polymerization. The monomer is produced by heating chlorodifluoromethane to temperatures around 1200°F (650°C).

PTFE is heat resistant, very resistant to attack by other chemicals, and has a slippery surface. It is used in gaskets, corrosive-resistant liners for pipes, hoses and containers, bearings, corrosion-resistant valve and pump parts, and slippery coatings for saw blades and cooking utensils.

tennis balls - are made in two pieces of "dog-bone" shape that are compression molded (4B1) of a very high grade of resilient rubber with gas barrier properties. Flash is trimmed from the two molded pieces and the edges are buffed and coated with an adhesive. The two halves are then butted together in a fixture under pressure, and heated to cure the adhesive. A pellet, placed inside the two halves before bonding, releases gas and fully inflates the ball as it is heated to vulcanize the rubber. In another method, the halves are vulcanized before being joined, and the bonding fixture is under pressure, so that the balls emerge from bonding already pressurized. The ball is coated with an adhesive and two pieces of fabric, also in a "dog-bone" shape, that fit together, and are bonded in place to the surface of the ball under pressure. The fabric is a combination of woven cotton with added fibers of nylon and wool, treated to have a felt-like surface. The finished balls are normally packed in aluminum cans under pressure sufficient to preserve their pressurization.

textile fabrics - See Chapter 10.

thermometers - of the traditional type are made primarily from glass tubing and a liquid, either an alcohol mixture, dyed red, or liquid mercury. (The use of mercury has been strongly discouraged in recent years because of environmental concerns, but mercury is still used where accuracy is important.) Standard outside or inside household thermometers, also have plastic or sheet metal mounting plates, suitably marked with the temperature graduations. Medical thermometers have the graduations etched directly on the glass tube. They are also made with a strip of white-colored opal glass as well as clear glass so that the temperature graduations are more visible against the white background. Two tubes are involved: One is the capillary tube; the other is a thin-walled tube from which the reservoir bulb is blown. Both kinds of tubing are drawn by machine (5A2c) and are usually supplied to the thermometer plant by a glass manufacturer.

The glass capillary tubing is drawn to produce a fine diameter bore. Some thermometers use round tubing; others use tubing of a rounded triangular cross-section. The triangular tubes are called the lens type because they magnify the width of the liquid in the tube. Fig. T1 shows the cross-section of this type of tubing. After incoming inspection, the bulb reservoir is made from the thin-walled tubing by heating the end portion of the tube, pinching it to close the bottom opening and blowing to form a bulb shape (glass blowing - 5A2b). The bulb is attached and sealed at the bottom of the capillary

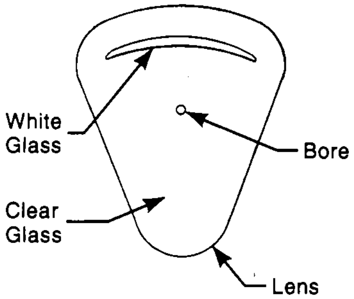

Fig. T1 Enlarged cross-section of a glass capillary tube for a clinical thermometer using a column of mercury to indicate temperature.

tube. The tube is then placed in a vacuum chamber, upside down. When air has been removed from the bulb and bore, the alcohol mixture, or mercury, is fed into the chamber and is allowed to rise in the tube to a prescribed level as the vacuum is gradually removed. The top is then sealed. The tube may undergo aging at this point, depending on its intended application. The tube is then inverted, heated and then cooled, and placed in a bath of controlled temperature, the temperature depending on the use and temperature scale wanted, and a mark is made in the tubing for that temperature. (In some thermometers, the mark is made at the freezing point of water, 32°F (0°C) and also at the boiling point of water, 212°F (100°C). Then, when the scale is put on the glass tubing or the mounting plate, it is located to conform to the reference points.

Scales on the glass are etched by coating the tube with wax, removing the wax where the markings and numbers are to be placed, and dipping the tube into hydrofluoric acid, which is subsequently washed away. Paint is then rubbed into the etched numbers. Printing the scale on plastic mounting plates is done by hot stamping or screen printing, and on metal mounting plates, by printing after they are blanked, formed and painted. Product and manufacturer information may also be printed on the mounting plate. The thermometers are then packaged for shipment and sale.

Oven thermometers use a bimetallic strip in spiral form and an analog dial. Digital thermometers use an electronic sensor and an integrated circuit with an LCD display.

thermoplastics - See entries under the name of the particular plastic.

thread - is twisted yarn, made for sewing operations rather than for weaving or knitting. The manufacturing process for threads is very similar to that for yarn, as described in section 10B. Sewing threads, however, are ply yarns (made from two or more yarns), which have a particularly-balanced tight twist to provide a circular cross section and smooth surface. The smoothness facilitates movement in sewing machines and penetration into the fabric being sewn. Cotton, silk, and nylon are three common thread materials, but many other natural and man-made fibers may also be used.

tiles, ceramic - are made with conventional methods for ceramics. (See 5B.) Most tiles are formed by pressing (5B5). Also see 5B3 and, if tiles are glazed, 5B15.

tiles, floor - See *vinyl flooring.*

tiles, plastic - See *vinyl flooring.*

tin - chiefly comes from the mineral cassiterite where it occurs in the oxide form, SnO_2. To extract the tin, the ore is first crushed and washed. It is then roasted so that the sulfides of copper and iron are oxidized. The ore is washed a second time to further remove impurities. It is reduced by smelting in a reverberatory furnace with coal or coke. This treatment yields molten metallic tin that is collected at the bottom of the furnace. The tin is cast into blocks. When these are remelted, the impurities form a slag that is skimmed off. The remaining tin may be further refined electrolytically. Tin is an alloying metal in soft solder, used extensively in the assembly of printed circuit boards, in alloying bronze, brass and babbitt metal, and as an electroplated or hot-dipped coating.

tires, rubber - Present vehicle tires are usually made with both natural and synthetic rubber (See *rubber, natural* and *rubber, synthetic.*) Sheets of mixed natural and synthetic rubber are reinforced with cords of nylon, rayon and/or steel. The cords are first pre-coated with latex rubber and then are pressed into the rubber sheets. The sheets are fed to a collapsible drum-shaped form and wrapped around it to a prescribed thickness, sandwiching layers of fabric impregnated with rubber. Several layers are laid on the form in the desired pattern. For tubeless tires, an air-proof layer is included. The cables or wires to reinforce the bead are laid in place on each side and are held by folding over the ends of the cord fabric. Then the final layer, an extrudate of rubber that will form the treads, is wrapped around the form and overlapped at the ends. The form is then collapsed and the tire blank is removed and placed in the bottom half of a round mold in a compression molding press (4B1). A butyl rubber bladder is placed inside the tire. The upper half of the mold descends to close the mold, and the bladder is inflated to press the tire blank against the mold walls. Heat is applied through the mold and from steam inside the bladder. The combination of heat and pressure forms the tire treads and molds identifying information on the tire walls. The heat cures the rubber and a formed tire is ejected from the mold. Flash is removed, as necessary, the tire is inspected, a label is affixed, and the tire is ready for shipment. Fig. T2 illustrates a common tire manufacturing sequence.

titanium - is made from the ore, rutile, an oxide of titanium, or ilmenite, an oxide of iron and titanium. The sand ores are screened and separated from unwanted materials, and concentrated by a series of operations that involve gravity and electrostatic and magnetic processes. If ilmenite is the source alloy, a series of hydro- and pyro-metallurgical steps removes the iron and upgrades the ore to a become a synthetic rutile containing more than 90% TiO_2 - titanium oxide. Titanium oxide is an important white pigment and 95% of mined titanium ore ends up as a pigment instead of metal. The oxide is converted to titanium tetrachloride with the carbochlorination process. The converted material is further purified and then reduced with molten magnesium in an inert atmosphere. Titanium is an attractive aerospace structural material because of its favorable strength-to-weight ratio and corrosion resistance. It is also used in chemical processing equipment, prosthetic devices and pump and valve parts.

toilets and other sanitary ware - See *sanitary ware.*

toilet paper - See 9C4.

tooling, rapid - See 14B.

tools, hand - See *hammers, pliers, wrenches and handles, tool.*

toothpaste - usually contains about 12 ingredients including: a mild abrasive - diatomaceous earth, dicalcium phosphate, sodium metaphosphate or calcium pyrophosphate; a binder, gum tragacanth, carrageenin - derived from a red algae, "Irish moss" - or cellulose gum to prevent separation of the ingredients; flavoring - peppermint, spearmint or other oils; water; a humectant, usually glycerine, to provide plasticity and prevent drying; saccharin or cyclamate as sweeteners; a detergent to add cleaning power; sodium salicylate, myrrh or another germicide to inhibit plaque build-up; coloring agents; and stannous fluoride in some toothpastes to prevent tooth cavities. These ingredients are thoroughly mixed and dispensed by automatic machines into tubes that are capped, open at the bottom and inverted

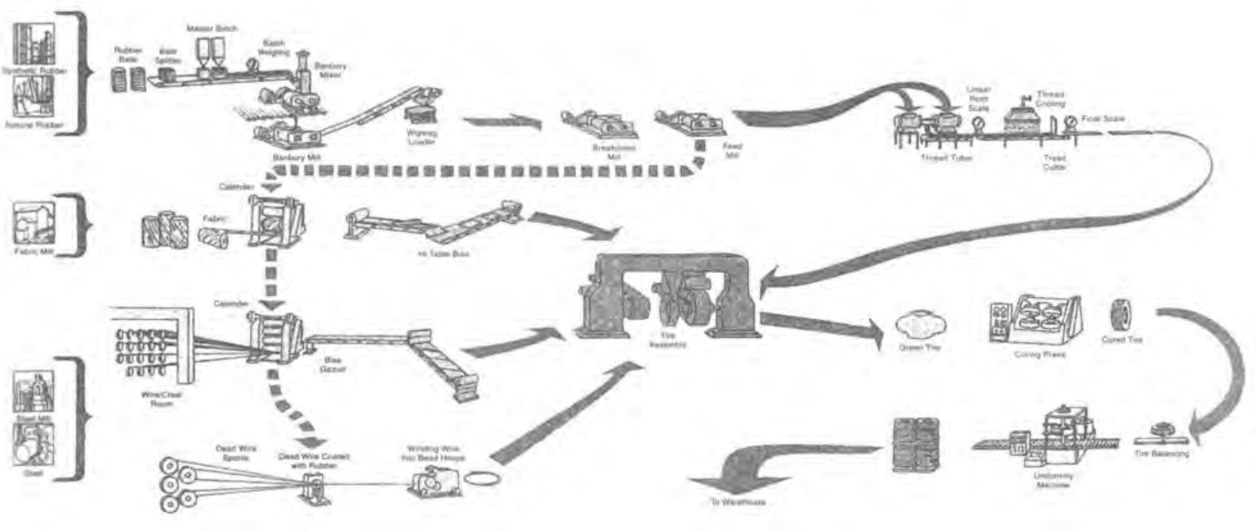

Fig. T2 The radial tire manufacturing process.

for filling. The tubes are injection molded from plastic, color printed and assembled to injection molded caps all by automatic equipment. After filling the tube bottoms are heat sealed by the filling machine. The tubes are inserted in cardboard boxes which, in turn, are placed in shipping cartons.

toothbrushes - See *brushes.*

towels, paper - See 9C4.

trailers - are made for a number of purposes: to transfer products, product components, materials, foods, and other goods, to transport people for travel and vacation, and as temporary offices and living places. The designs of trailers, their structures and their auxiliary equipment, vary considerably, depending on the uses to which the trailers will be put.

Airstream® travel trailers are made, in their external surfaces, with stretch-formed aluminum sheet, using hydraulic machines of 100-ton-capacity for the stretch forming. (See 2F3.) The sheets are trimmed (2C6), and pre-punched (2C5), or drilled (3B1) for rivet holes. Aluminum rivets, similar to those used in aircraft, are used to fasten the sheets to the frame. Body frame ribs and spars are also aluminum, blanked (2C4), and press-formed (2D2) from sheet stock. There are five major subassemblies that together constitute the shell or body of the trailer: two sidewalls, the rear and front end assemblies, and the roof. All are made with aircraft-like aluminum construction, held together with rivets. Chassis are made from box channel and other steel structural members, arc-welded together. After the chassis is welded and painted, it is moved to an assembly area. It is inverted and underside components (axles, a galvanized steel (8F2) protective sheet, gas lines, stabilizer jacks, and a spare tire carrier) are assembled. Then the chassis is turned upright and water tanks, piping, ductwork and under-floor fiberglass insulation are added.

The shell assembly (aluminum body) is made separately. The five shell subassemblies are made independently and a steel fixture is used to guide their attachment to each other. They are held together with more rivets. They are also fastened on the bottom to an internal subfloor made of oriented strand board. (See 6F4.) An aluminum channel provides reinforcement and moisture protection at the junction of the walls and floor, and is held to the shell by riveting. Openings for windows and doors are cut with manually-held routers, guided by fixtures. Window assemblies (windows and frames) are also riveted in place. Similar openings are made in the roof for ventilating fans and a roof-mounted air conditioner. The body shell is then moved and carefully lowered onto the chassis and the two are bolted together.

After the body shell and chassis are fastened together, considerable additional assembly and finishing work is involved. Sealant is applied to all seams. Electrical wiring, the roof air conditioner, doors, and TV antenna are installed. Exterior trim, tail lights, and other lights are installed, and decorations are added. The exterior is then inspected and the partially-completed trailer is subjected to a water test with a high pressure spray. The interior finishing then takes place.

Interior work involves the installation of fiberglass batten insulation in all ceilings and walls, the completion of wiring inside the unit to electrical outlets, switches, lights, TV antenna and phone sockets, and the installation of interior plumbing. An aluminum skin is installed on the interior walls using "pop" rivets (blind rivets - 7F4b) for attachment to the structure of the exterior shell. Then a vinyl liner is glued to the interior aluminum wall. Interior cabinets, furniture, and other items, are installed. These include kitchen cabinets, a dinette, closets, sinks, faucets, counter tops, bathroom shower stall, lavatory and toilet. Kitchen appliances and vinyl and carpet floorings are installed. Then, there is a final cleaning and inspection to ensure that the interior work is of the desired quality, and that all apparatus is in working condition. When all tests and inspections are successfully completed and passed, the trailer is ready for shipment to a dealer for sale to a customer.

Other makes of trailer are assembled from flat panels of fiberglass-reinforced plastics instead of aluminum. Frames utilize both wood and steel members. Steel members are bolted or welded to produce a strong structure; wooden frames are fastened with screws, bolts, and adhesives. Trailers for cargo utilize steel framework, often much stronger and heavier than that used in travel trailers. All have a chassis welded from steel structural components. After the frame is completed, and before or after external panels are fastened, electrical wiring is installed as are duct work and piping, if needed. Fiberglass or plastic foam panel insulation is fitted from the inside. Assembly is largely manual, but is assisted by powered hand tools. The assembly is usually on a line basis, especially for quantity trailer producers and the assembly work, therefore, is divided so that each worker performs a fairly limited task, for which he or she can become highly skilled. Internal prefinished wall and ceiling panels are installed after all items in the walls are completely in place. The sequence of operations for all travel trailers is quite similar to that described above for Airstream units.

trampolines - are assembled from frame parts, springs and a nylon or polypropylene "mat" which serves as the jumping surface. The frame is made from welded and galvanized steel tubing. The tubing is made from coiled strip that is contour roll-formed (2F7) to a round cross section. The edges are heated by induction and butt-welded as the strip moves through the roll former. (See 2A6.) Holes are punched in the tubing for spring attachment, and the ends are swaged (2F1) to be smaller or expanded (2H2i and 2H2j), so that they will fit together, end-to-end. Assembly of the frame takes place after the tubing is formed to a circular shape with a three-roll forming machine (2H2f). Leg lugs are welded to the tubing. Legs for the trampoline are cut to length, swaged at the ends to fit the lugs and together, and are bent to a J-shape. The mat is woven (10C) from nylon or polypropylene yarn and pressed in heated rollers (i.e., *calendered*) to provide a smoother surface and to interlock the yarn. The resulting fabric is cut to a circular shape, hemmed in sewing machines and assembled to grommets that will each hold one end of the springs. Reinforced polyethylene sheet is sewn to a circular bag shape, and then it receives sections of polyurethane foam that provides cushioning from the springs. These components and, typically, 88 springs, are packed in a corrugated carton for the customer. Cartons are weight-checked to ensure that all parts are included. The customer assembles the trampoline at the location where it is used. The springs that surround and hold the mat, and the natural springiness of the mat, provide the "bounce" that characterizes the trampoline.

transformers - See 13L4.

transistors - See 13L5.

trays, plastic - Although many trays are injection molded (4C1) or thermoformed (4D), the common fiberglass-reinforced cafeteria tray is made by matched-metal-mold forming (4G9).

trumpets and other brass musical instruments - See *musical instruments, brass.*

tubing, glass - See 5A2c.

tubing, metal, seamless and welded - See *pipe and tubing, metal.*

tubing, plastic - is made by profile extrusion (4I1) of various plastic resins. Flexible tubing is extruded from plasticized vinyl, polyurethane, polyethylene, nylon, teflon, silicone, neoprene and other plastics and elastomers. Tubing reinforced with braided wire or fiber is made by passing the braid through the extruding die so that both the braid and the plastic matrix exit the die at the same time. Rigid tubing (plastic pipe), commonly is extruded from unplasticized PVC or CPVC with mineral fillers.

tungsten - a heavy metal with a very high melting point, is made from the ore, wolframite, which has the composition, $(FeMn)WO_4$. The ore is concentrated by gravity methods, yielding a concentrate with 60 to 76% tungstic oxide $(WO_3)^2$. This material is fused with sodium carbonate (Na_2CO_3) to produce sodium tungstate (Na_2WO_3) The sodium tungstate is dissolved in water but the tungstic oxide precipitates as a yellow powder when hydrochloric acid is added to the solution. The precipitate powder is reduced with hydrogen in an electric furnace, to metallic tungsten. It is then pressed into bars and sintered. Another source for tungsten is depleted uranium. Tungsten is used in tool and alloy steels, magnets, electrical contacts, spark plugs, rocket nozzles, radiation shielding, and other applications, particularly when resistance to high temperatures, wear, radiation, and acids is important.

turbine blades - See jet engines.

turpentine[4] - was traditionally made from the gum (oleoresin) of the pine tree, or pine tree stumps, distilled (11C1) into rosin and oil (or spirit) of turpentine. Current production is by distillation from tall oil, a by-product of kraft paper manufacture. The other product of the distillation is pine oil. Strong odoriferous substances in the turpentine are removed by treatment with sodium hyperchlorite or other mild oxidizing agents. Turpentine is still used as a paint thinner, but the main applications are in chemical processes, particularly as a raw material in the production of synthetic flavors and fragrances.

U

ultra-high-molecular-weight polyethylene - See *polyethylene, ultra-high-molecular-weight.*

ultra-high-strength steels - are steels with tensile strengths above 200,000 psi (1,380MPa). Quite a few alloy steels meet this specification. Steels alloyed with chromium-molybdenum, and chromium-nickel-molybdenum, with suitable heat treatment and sufficient carbon content, can achieve the necessary strength. Several types of stainless steel meet the specification, notably cold-rolled austenitic and semi-austenitic grades. Maraging steels containing less than 10% nickel, plus 10 to 14% chromium, can be formed, machined, and welded, and then, by a simple aging at about 900°F (480°C), can well exceed 200,000 psi in yield strength[2].

umbrellas - normally consist of a fabric canopy stretched over a light metal frame that can be collapsed to make the device compact when not in use. The fabric is typically polyester or nylon. The frame consists of a central shaft, a slide that fits the shaft, of a series of arms called "stretchers," and ribs that support the fabric canopy. The stretchers, which extend the ribs, are attached to the slide at one end, and to the ribs at the other end. Some shafts have a telescoping feature that allows the folded umbrellas to be further shortened for easier carrying or storage. Shafts have a handle at the lower end.

The shaft may be turned from wood but is more commonly made from drawn (2B2) steel tubing, particularly if there is a telescoping action. The stretchers are made from sheet steel, blanked (2C4) and formed (2D2) to the necessary shape with a U-cross-section. The ribs may be similarly formed but are often made from round steel wire. Connections between stretchers and ribs are made by means of brass eyelets in punched or drilled holes. Wire ribs are flattened by a press operation to provide space for such connections. The slide is injection molded of acetal or other plastic and contains slots for attachment of the stretchers with steel wire. There is a similar, non-sliding, injection-molded piece at the top of the shaft for fastening the ribs to the shaft at the top. There is a slot in the shaft and space for a spring, pivot, and triangular catch piece, blanked from sheet steel, to hold the umbrella open. The handle may be injection molded or lathe-turned from wood. Metal parts are electroplated (8C1), usually with a chromium finish. The canopy is sewn from six or eight pie-shaped pieces of fabric that are cut, sewn together, and hemmed at the bottom edge with methods described in 10H. The umbrellas are assembled manually, with machine assistance for eyeletting and other operations. The workstations are usually laid out on an assembly-line basis. A ferrule of metal (made on a screw machine) or plastic (injection molded), is press-fitted and/or bonded to the end of the shaft. Small similar ferrules are pressed onto the ends of the ribs and they contain small holes for thread attachment of the canopy. The last line operation is testing and packaging the finished umbrellas.

undergarments (underwear) - are made with the methods commonly used for other garments and sewn products. (See 10H.) Woven (10C) or knit (10D) cotton is the common fabric, but rayon, nylon, wool, polyester and linen fabrics are also used. Also see *lace* and *spandex.*

unwoven fabric - See 10E.

upholstered furniture - See 6H.

uranium fuel[4] - The fuel most commonly used in nuclear reactors is uranium dioxide, UO_2 in pellet, rod, sphere, plate, or pin form, clad with zirconium, stainless steel, other alloys or aluminum oxide. (Thorium and plutonium are other reactor fuels.) Uranium ore, pitchblend, is mined in several places and contains about 2% uranium oxide, U_3O_8. The ore is milled and the U_3O_8 concentrated to form "yellow cake". This operation is accomplished by sulfuric acid extraction (11C3) followed by solvent concentration. Ion exchange and precipitation with sodium hydroxide may also be used.

The uranium in the yellow cake is then further concentrated and purified to extremely high levels by a complex, multi-step process that includes digestion with nitric acid and steam, solvent extraction of the uranium with tributyl phosphate (TBP), reextraction from the TBP in pumper-decanter pulse-extraction columns, denitration to UO_3, hydrogen reduction to UO_2, and hydrofluorination to yield uranium tetrafluoride,UF_4. Further fluorination with fluorine gas, F_2, in a special furnace at 660°F (350°C) yields uranium hexafluoride, UF_6. The UF_6 contains two isotopes of uranium, U-235 and U-238. The isotope used for fuel must include sufficient U-235. The concentration of U-235 is increased by repeated steps of either centrifugation (11C7e) or gaseous diffusion (See membrane separation - 11C7c). The uranium hexafluoride is reduced to metallic uranium in a batch-type furnace with magnesium, followed by reconversion of the uranium metal to UO_2. (An alternative ammonium diuranate process converts the UF_6 gas to UO_2 in powder form.)

The UO_2 powder is then fabricated into pellets or other fuel-use forms by methods used for processing ceramics: pressing (5B5), sintering (5B16) at 2730 to 3270°F (1500 to 1800°C) and grinding (5B14) to the precise size. The pellets are clad and sealed for use in a reactor.

urea and melamine plastics - are made by reacting urea ($NH_2{\cdot}CO{\cdot}NH_2$) or melamine ($C_3H_6N_6$) with formaldehyde (CH_2O). The resulting plastics are also known as urea-formaldehyde (UF) and melamine formaldehyde (MF). Urea, a major constituent of mammalian urine, is made commercially from the reaction of ammonia and carbon dioxide, both as liquids. The reaction takes place at a high temperature and high pressure to form ammonia carbamate. This decomposes to urea and water. The formaldehyde is made by oxidizing methyl alcohol. Urea-formaldehyde is then the product of the combination of urea and formaldehyde, heated with mild alkalies. A condensation polymerization takes place, yielding the water-soluble resin. The resin is mixed with wood fiber or other fillers, pigments, and other materials to provide a thermosetting molding material. During molding, the heat and pressure cause further reactions to take place and the resin becomes heat and temperature resistant.

Melamine-formaldehyde is made by similar condensation polymerization reactions but with melamine instead of urea reacting with the formaldehyde. The melamine $(N{:}C\ NH_2)_3$ for this reaction is produced by heating dicyandiamide under pressure, or by reacting ammonia and urea at an elevated temperature.

Urea, melamine and phenolic plastics are similar in their properties, processing and applications. All are thermosetting, are blended with fillers for molding, and have good heat and water resistance. Urea-formaldehyde is used for appliance handles and knobs, knife handles, buttons, housings, and table plates. The resin is used as an adhesive in making plywood and waferboard, and as a treatment for wash and wear properties in fabrics. Melamine-formaldehyde is used in molding dinnerware, buttons, and electrical components, and in laminated table and counter tops ("Formica" or "Melmac"). The polymer is used for baked coatings on appliances, metal furniture, and automobiles, and for adhesives.

urethane rubber - Polyurethane plastics, made from the reaction of organic diisocyanates and polyglycols, are rubbery in nature. Two common reactions are TDI (tolylene diisocyanate) and MDI (4,4'-diphenylmethane diisocyanate) reacting with linear polyols of polyether or polyester. Chain extenders, water, glycols, aminoalcohols or diamines, are used to achieve a long-chain product[2]. Urethane elastomers have high abrasive resistance and are usable at elevated temperatures. If the diisocyanate contains free carboxyl and hydroxyl groups, the reaction with polyglycols will produce gas, which will cause the urethane to foam. The result can be a flexible cellular material that is useful for mattresses, upholstery and other applications of foam rubber. Rigid foam can also be made by changing the reacting materials. Among other applications, rigid polyurethane foam is used as insulation in refrigerators, freezers, and buildings. (Also see *polyurethane.*)

utensils, cooking - See *cooking utensils.*

V

vacuum bottles (Thermos® bottles, Dewar flasks) - were previously made only from glass. The vast majority are now made from stainless steel.

When glass bottles are used, two bottles are blown by the blow-blow (5A2b3c) or press-blow (5A2b3d) methods and placed one inside the other. The space that will be between the bottles is coated with silver in the same way as the rear surface of glass mirrors are silvered (See *mirrors*). The inner bottle is inserted in the outer bottle. The top portion of both bottles is then heated and the bottles are finish formed and joined (5A5d) so that there is an air space between them. The space between them is open only at one small hole at the bottom of the outer bottle. The air is then evacuated from the space between the bottles by a vacuum pump connected to the small opening, after which the opening is sealed with epoxy plastic, leaving a vacuum between the bottles. The double-walled bottles are then assembled into blow-molded plastic (4F) containers. A threaded, hollow (blow molded) stopper is provided. In most models, the stopper has an elastomer O-ring or gasket for additional sealing of the bottle's contents. An additional injection molded (4C) threaded cap is provided, to provide further insulation and serve as a drinking cup.

Stainless steel bottles also consist of a bottle-within-a-bottle, with a vacuum space between the two. The two stainless steel bottles are made from welded stainless steel tubing (See *pipe and tubing, metal*) with drawn (2D5) and formed (2D2) end pieces. The inner bottle, at the pouring end, is reduced in diameter and formed with screw threads for the stopper. This is done by a series of operations including swaging (2F1) and forming with annealing (8G1) between operations to remove work hardening. The pouring end of the outer bottle is formed to mate with the inner bottle. The other end of the inner bottle is a deep drawn piece that is arc welded, by the GMAW or GTAW methods (7C1d or 7C1e), to the tubing. The surfaces of the two bottles that will face the vacuum are polished and electroplated (8C1) with copper to provide a barrier to block the passage of radiant heat. The formed pouring end of the outer bottle is fastened to the inner bottle by roll welding (7C13e). Then a drawn bottom piece is welded to the outer bottle. This completes the welding that seals all the joints to the space between the bottles. One small hole is left at the bottom of the outer bottle for air evacuation. Air is evacuated from the space between the paired bottles, by a vacuum pump, and sealed with hard solder (7B). This step is done for one vacuum bottle at a time. A new method places a group of bottles in a large vacuum chamber where, after the air is evacuated, the openings are sealed inside the chamber. Visible surfaces of the outer bottle and spout are polished, usually to a satin finish. Most bottles also have an exterior blow molded plastic container that covers the arc welded joints and provides an air space between the container and the outer stainless steel bottle.

vanilla - is extracted from the vanilla bean, the immature fruit of a tropical vine. The beans are picked before they are fully ripe, and are cured in a treatment that involves repeated exposure to sunlight during the day and sweating at night. The curing produces fermentation that divides the glucoside glucovanillin in the bean into glucose, vanillin, and other aromatic substances. The beans are cut up into small pieces and soaked for three cycles in 35% ethyl alcohol to soften and break down these materials. They are recombined in the desired portions to make vanilla extract. Vanilla flavor is common in ice cream, baked goods, chocolate candy, beverages and other foods.

varnish - is unpigmented enamel, a solution or dispersion of colloidal resins in drying oils and/or solvents that produces a transparent coating. Varnish is frequently used on wooden products to enhance and protect the wood grain finish. See *paint* for the manufacturing process. The resins may be natural or synthetic. Although varnishes contain no pigments, they sometimes contain dyes to change the color shade of the object coated, especially when the object is wooden. Varnishes dry or cure to provide a transparent film that provides protection and enhances the color of the object that has been coated. Like enamels, varnishes dry by oxidation, polymerization, and/or evaporation of the carrier liquids. Varnishes made with alkyd and urethane resins have become prominent because of their improved properties, but phenolic, acrylic, epoxy, and ester gum resins are also widely used. Varnishes are used as coatings on furniture, wood floors, boats, and house siding.

vases - (made by manual blowing) See 5A2b1.

veneer, wood - See 6F1, 6B7b, 6E4, 6D2.

vermouth - is a wine-based alcoholic beverage. It contains a blending of herbs and other flavorings in a solution of alcohol. Juniper, cloves, hyssop, quinine, chamomile, orange peel, coriander and other ingredients may be used in various proprietary formulas. The flavor-carrying elements are steeped in alcohol, either heated or at room temperature. The flavored alcohol is then added to sweet or dry wine, depending on the variety of vermouth, aged for several months in tanks and then bottled.

vials, glass - (made from tubing) See 5A2c.

vinegar - is made from any of a variety of liquid food materials by a fermentation process. The full process involves two steps of fermentation. The food (grapes, apples, sugar, rice, malted barley) is first converted to juice or other liquid, which is fermented to convert the sugar it contains to alcohol in dilute solution (forming wine, beer, hard cider, or other alcoholic beverage). (See 12J4 for fermentation of sugar-bearing liquids into alcohol-bearing liquids.) A second microbiological process, also referred to as fermentation and using acetobacter bacteria, then converts the alcohol into acetic acid. (The acid gives vinegar its sour taste.) Household vinegar contains about 4 percent acetic acid. This second process also utilizes the oxygen in the air to complete the fermentation reaction. In modern production processes, the liquid undergoing the second fermentation may be continuously aerated to accelerate the process. Other organic acids and esters in the original juice remain in the vinegar to give it its particular aroma and flavor. Herbs, spices, garlic, tarragon and onion may be added to the vinegar to enhance or change its flavor.

vinyl flooring - consists of tiles or sheets of floor covering material, with polyvinyl chloride plastic as a major component. Other components include plasticizers (which provide flexibility/resiliency to the vinyl), calcium carbonate (chalk, a whitener and filler), other pigments, stabilizers, and a backing or carrier sheet. The carrier sheet is a heavy paper or felt that supports the vinyl. High-gloss ("no wax") flooring has, in addition, a clear coating of polyurethane on the top surface. Standard sheet widths in the United States are 6 or 12 ft (1.8 or 3.7 m), and the standard tile size is 12 × 12 in (0.3 × 0.3 m). Pre-glued tiles have a coating of pressure-sensitive adhesive on the bottom surface, with a temporary protective paper layer that is removed when the tile is laid.

The manufacturing process involves mixing the vinyl resin, plasticizer, and other ingredients, sometimes with AZO, a foaming agent. (The AZO releases bubbles of nitrogen gas when heated.) The mixture is heated, deposited, and smoothed on a moving sheet of the backing material with a reverse roll coater (4K1b). The coated sheet is passed through an oven of controlled temperature, and is then cooled. The thickness of the foamed vinyl layer is normally from 0.010 to 0.030 in (0.25 to 0.75 mm) depending on the grade of product being produced. Decorative patterns are printed on the surface of the vinyl using the intaglio (gravure) process (9D3 and 9D3a). Then, a second coating of plasticized vinyl, with no filler material, is applied to the printed vinyl, using the same reverse roll-coater method. The printed sheet is again passed through an oven to fuse the two layers, and is again cooled. The second layer is a clear protective layer to maintain the decorative pattern and color even when the vinyl wears from foot traffic. If the product is the "no wax" variety, a third layer, this one of polyurethane, is deposited by roller coating, and the polyurethane is cured by ultraviolet radiation. The sheet is then ready to be cut to the standard widths and wound into rolls.

Vinyl floor tile may be made somewhat differently. Sometimes, no back up sheet is used, but the vinyl plastic incorporates a calcium carbonate filler. The mixture of vinyl, filler, plasticizer, pigments, and other ingredients is heated and then calendared (4J) into sheets. The sheets may be printed and embossed. Various pigments may be included in the vinyl mix to provide an inlaid color. The surface may also be embossed, especially if the inlaid color is stone-like. Another inlay method uses clear vinyl with no filler, but with small pieces of colored vinyl mixed in. If the color pattern is printed, a layer of clear vinyl is added as it is with the sheet material and, if "no wax" properties are wanted, a polyurethane third layer is also added. If a pressure-sensitive adhesive is specified, it is applied by roller coating to the sheet bottom and a protective paper sheet is also applied. The sheets are then cut into individual tiles, with a machine using steel-rule type dies (2C4a). The tiles thus produced are cooled and packed into corrugated boxes of 10 or 12 tiles each, ready for shipment to customers.

vinyl plastic - See *polyvinyl chloride (PVC).*

vinyl plastisol coatings - See 8D10.

vinyl siding (for buildings) - is made by the profile extrusion (4I1) of wide panels of polyvinyl chloride resin, mineral fillers, pigments and other additives. For some siding, a thin layer of acrylic plastic is coextruded (4I2) on the outer surface to provide better color retention and weatherability.

viscose (viscose rayon) - See *rayon* and 10A2.

vitreous enamel coatings - See 8F1.

vodka - is an alcoholic beverage originally made from potatoes but now made mainly from wheat and other cereal grains through fermentation (12J4) and distillation (11C1). Also see *distilled spirits.* The manufacturing process removes much odor, color, and flavor. The liquid, then, is highly neutral and clear in color. It is sometimes flavored with lemon, "buffalo grass", berries, peppercorns or caraway.

vulcanized fiber - See 9C6.

W

wafer board lumber - See 6F3.

wallboard (plasterboard, gypsum board, drywall, sheet rock) - is gypsum plaster, solidified in board form, often with fiber reinforcement, faced on both sides and edges with paper. (See *plasterboard* and *gypsum plaster.*) Wallboard is used for interior ceiling and wall paneling.

wall paper - Present-day wallpapers (wall coverings) are commonly made either from paper coated with vinyl and some other materials, from fabric coated similarly or from solid vinyl sheet. Paper making for wallpaper follows normal papermaking processes from wood pulp as described in section 9B. Coating materials, in addition to vinyl, are latex, kaolin (clay), and titanium dioxide (white pigment). Other ingredients sometimes used are mold-retardants, insecticides, fungicides, and flame retardants. Vinyl sheeting is usually produced by calendaring (4J) and vinyl-coated wallpaper or fabric is produced by plastic coating/laminating (4I4). The vinyl is usually colored in the background color of the printed design that will be made on the sheet. Printing can be by one of four common methods: letter press with rubber type (flexographic - See 9D1b.), rotogravure (9D3a), silk screen (9D4b), and stencil printing (9D4a), performed with rotary printers using photographically-produced stencils. An additional clear vinyl plastic coating may be put on the paper after printing. By printing with an adhesive, and spraying powdered material or yarn, a flocked appearance can be created. Roller coating the reverse side of the paper with an adhesive is now very common. The adhesives are usually made from corn starch or wheat starch. When used, they are activated with a sponge or other means to wet them.

washers (as used with bolts, etc.) - are blanked from coiled sheet metal with high-speed, multiple blanking dies (2C4.) Washers can be made from almost any metal, but hardware-store washers are blanked from mild steel sheet, and are cleaned (8A1d), and bright-zinc barrel-plated (8C3).

watches - Digital watches utilize the oscillations of an electronic circuit containing a quartz crystal. The quartz crystal oscillates electrically at a fixed high frequency, and a series of divider circuits reduces the frequency of the current. Each circuit divides the frequency in half, and switches the signal to another circuit. The final once-per-second electrical pulses activate a digital display through further circuitry connected to the applicable segments of the display. The components of watches with a digital display consist of an assembly of one or two integrated circuits (13K), a small printed circuit board (13A), a digital liquid crystal display, (See *liquid crystal displays.*), an enclosing case of formed metal or molded plastic, a glass lens, two or more push buttons, a small silver oxide, mercury, or lithium cell to provide the electric current, and a wrist strap with a buckle. The crystals used are made from synthetic quartz that is made in a process carried out in an enclosed pressurized chamber. The chamber contains an alkaline silica solution, heated to about 750°F (400°C). Seed crystals are suspended in the liquid. Additional quartz then deposits on the seed crystals to eventually form crystals of usable size. This takes about 75 days[9]. The crystals are purified by running an electric current through them at a high temperature (932°F - 500°C). They then are cut by diamond abrasive saws to the size at which they oscillate at the desired frequency of 100 megaHertz. The crystals are connected to wires at each end and encapsulated under a vacuum. When the printed circuit board is made, the crystal is incorporated as part of it.

Analog electronic watches (those with a dial and hands) have similar electronics but translate the oscillations into the movement of watch hands with a small stepping motor and a train of gears. The gears are mounted on a central bridge or plate and connected to the hands of the watch. The gears and their mounting structure may be made, as they are in the most expensive mechanical watches, from fine-blanked (2C9), or conventionally blanked (2C4) and shaved (2C7), brass-alloy sheets. These parts may be plated with gold or silver. Shafts are made on Swiss-type screw machines (3A2c2). Gear-train parts are assembled with jeweled bearings (See *synthetic sapphires.*) that support the shafts. Precision-machined or stamped gears have been replaced in some watches with those injection molded to exact dimensions from glass-reinforced engineering plastics. (The reinforcement adds dimensional stability.)

Mechanical watches draw their power from the energy stored in their spiral mainspring (See springs.). The oscillation takes place in a balance wheel, controlled by an escapement mechanism, using a balance spring, a club-toothed escapement wheel, an escapement lever, shafts, bearings, and mounting plates. These parts are made with methods similar to those used to make the mechanisms of analog electronic watches. For wear resistance, the club-toothed wheel may be made of steel, heat treated for hardness, and then ground and polished.

water repellant fabrics - See 10F5e.

water, potable - for public water supplies. The water undergoes a number of purification treatments before it is usable. The number and extent of the steps taken depends on the quality of the water supply. Water from reservoirs requires more steps than ground water because it is more apt to contain foreign matter. Larger pieces of suspended or floating material are removed by intake screens at the processing plant. Aeration may follow to remove unwanted odors and tastes, and to solidify some dissolved compounds. Coagulants and flocculants are added and the water is piped to a sedimentation tank (See 11C7d.), where heavier impurities settle out. Filtration, commonly in sand-bed filters, is a vital step to remove particles of organic and inorganic solids and to clarify the water. (See 11C7a.) Carbon adsorption (11C9) removes molecules of impurities. The clarified water may be treated with chlorine to disinfect it against microorganisms, including those that could enter the water later. Additional treatments, sometimes used, involve fluoridation and water softening. Water for chemical processes may require ion-exchange processing or distillation to remove minerals in solution. Water used in nuclear reactors is normally purified to 0.08 ppm or less.

Fresh water is made from sea water or brackish water by a number of distillation processes. The major process is multistage flash distillation, described in sections 11C1c and 11C1d. Dissolved salts can also be removed by membrane separation (11C7c).

wax[4] - Waxes are high-molecular-weight fatty acids, in combination with high-molecular-weight alcohols (in comparison with oils and fats, which are fatty acids in combination with glycerin.) Waxes are of animal, vegetable, or synthetic origin. Animal waxes come from protective material secretions of insects. The most notable such wax is beeswax. Vegetable waxes are coatings on leaves, seeds, stems, and flowers. Synthetic waxes originate from petroleum refining, and from processes that use coal, lignite, or peat as raw materials. Paraffin is a product of petroleum refining; 90% of currently-produced waxes are petroleum-sourced. Beeswax and similar waxes are obtained by boiling nest material in water, or by solvent extraction (11C3) or expression (11C4). Vegetable waxes are obtained by various methods. Carnauba wax, used in automobile, furniture, and floor waxes, is obtained directly from the leaves of a palm tree. The leaves are dried and beaten, and the wax falls from them, after which it is melted and filtered. Another common vegetable wax, candelilla, is obtained from the stems of a plant that grows in the southwestern US and Mexico. The stems of this plant are boiled in dilute sulfuric acid, and the wax they contain floats to the surface and is skimmed off. Extraction with hexane is also used. Paraffin comes from lubricating oil, obtained from the fractional distillation of petroleum. The oil fractions are concentrated by freezing and filtering and the wax is removed by solvent extraction followed by distillation (11C1). Waxes can be made from the hydrogenation of oils or by removing glycerin from oils and replacing it with higher-molecular-weight alcohols.[2] Polyethylene plastic of low-molecular-weight has wax-like properties and is blended with softer waxes to provide more toughness, durability, and gloss.[2]

Waxes are used in the manufacture of polishes, cosmetics, printing inks, food containers, matches, crayons, candles, wax paper, and for waterproofing fabrics and other items.

whiskey - See *distilled spirits* and Fig. D2. Bourbon whiskey is made from a grain mixture with at least 51% corn. Rye whiskey is made with at least 51% rye grain, and Scotch whiskey is made with malted barley. All have some malt that is made by soaking kernels (normally of barley) in warm water, holding them until they sprout, and then drying them in a kiln. The sprouting produces a chemical, "diatase," that converts starches into sugar that, in turn, is converted into ethanol during fermentation. Straight whiskeys are made mostly from one grain; blended whiskeys are made from a broader combination of grains. Whiskey is aged in oak barrels that have charred interiors. The charcoal in the barrels, aided by the oak wood, neutralizes some of the harsh minor constituents of the liquid and adds some wood flavors to the whiskey. The aging process takes place in an air-conditioned environment.

white glue - See *adhesives.*

window panes - are made from drawn or float-process flat glass or, sometimes, plate glass. See 5A3 for a description of the various flat-glass processes. The flat glass is cut to size by scoring the surface at the cutting line with a small sharp metal wheel, or a pointed tool of diamond or tungsten carbide, and then breaking the glass panel along the scored line. Breaking is accomplished by applying a bending force, often with rollers, or by applying localized heat, at the score. In production situations, this operation is mechanized and, often, is fully automatic.

window panes, antique - See 5A3a.

windows - Flat glass for windows is made by one of a number of processes; however, the prime current method used is the float glass process, described in section 5A3f. The flat glass is cut to the size wanted by the method described above (*window panes*). In high production situations, the scored line is made by computer-controlled equipment. The glass panes are assembled in wood, plastic or metal frames. Wood frame members are made with suitable wood milling methods described in Chapter 6. Plastic frames (normally of vinyl) are made by extrusion (4I1) or injection molding (4C1) of the components, and metal frames are made by various metal forming methods (Chapter 2). Frame components are fastened together with adhesives, by welding (of vinyl or metal), or with metal fasteners. The glass and frames are assembled together by manual or robotic methods (Chapter 7), are labeled and packed for shipment.

windshields, automotive - See *automotive windshields.*

wine: Wine is made from the fermentation of the juice of grapes. Typical process steps are as follows:

1. As soon as grapes have ripened, usually in the fall of the year, they are harvested. They are picked by hand or with mechanical harvesters that shake the vines.
2. Juice is squeezed from the grapes with roller crushers or rotary paddle crushers that also remove the stems.
3. With white wine, the juice is separated from the pulp and skins by filtering and centrifuging; with red and rose wine they are left together.
4. The juice is placed in tanks in which fermentation (See 12J4.) will take place. A small amount of sulfur dioxide is added to the tank to act as a disinfectant. It kills naturally occurring yeasts and other organisms that are present on the grapes. A particular yeast is added to the liquid according to the characteristics wanted in the finished wine. (However, in some European wineries, the naturally occurring yeast on the skins of the grapes is relied upon to provide the fermentation.) Fermentation extends over a period of 3 days to two weeks, changing the glucose and fructose in the juice to ethanol and carbon dioxide gas. The temperature of the liquid in the fermenting tank is controlled. Since fermentation releases heat, cooling may be required. For white wine, the temperature is typically 50 to 60°F (10 to 16°C). Red wine is fermented at a higher temperature to help absorb color from the grape skins. The wine is periodically stirred during the fermentation

cycle, especially with red wine, to extract color from the skins. Sometime during fermentation of red and rose wines, the skins and pulp are removed from the juice in the tanks.
5. After fermentation, yeast and any other solid material that may be suspended in the wine is removed. This process is called "racking".
6. The wine is further clarified by filtration or "fining," a process in which bentonite (clay) or other material is used to absorb material suspended in the wine.
7. Aging. The wine is stored at a controlled temperature for a period of 5 to 12 months. Further racking and/or filtration may take place after aging.
8. Bottling, in production situations, is by automatic bottling machines.

It should be noted that air is kept from the liquid during almost the entire wine-making process by using an inert atmosphere or insuring that all vats are full of liquid. This precaution is taken because oxidation impairs the quality of the wine. Fig. W1 summarizes the wine-making process.

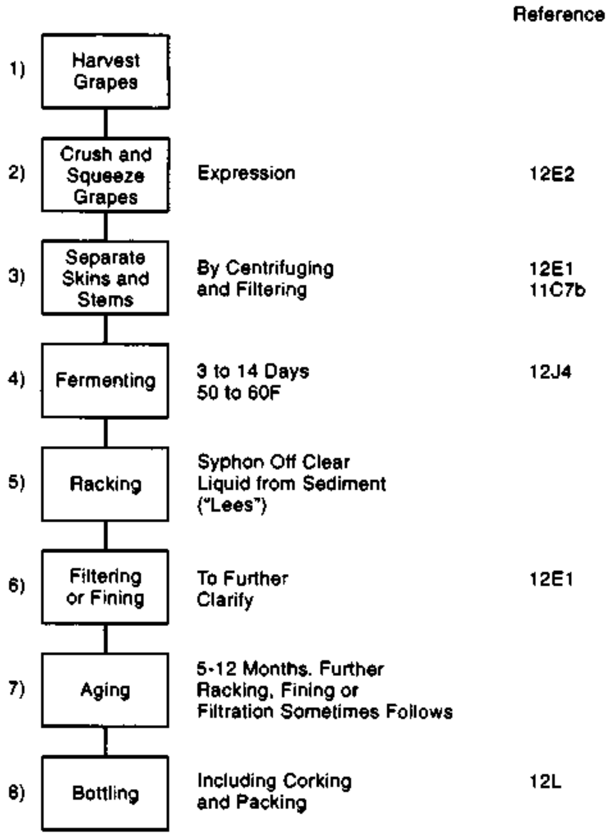

Fig. W1 The operation sequence for the manufacture of white wine. Red wine has a very similar sequence, except that the skins and stems of the grapes are removed after partial or full fermentation rather than before. Also, the occurrence and sequence of racking, fining and filtering operations often varies from the above sequence depending on the type of wine and the winery involved.

wire, electrical - is most commonly made from copper but is sometimes aluminum. Wire making starts with the extrusion of a rod of the metal used. The rod becomes the initial material for a series of wire drawing operations. In wire drawing, the wire is pulled through a series of successively smaller-diameter dies. Ten or more dies may be arranged in series, and one continuous length of wire is pulled through all ten. As the wire passes through the dies it is gradually reduced in diameter and increased in length. (See cold drawing, 2B2 and Fig. 2B2.) When the wire has reached the desired diameter, after one or more drawing operations and if it is to be insulated, the final operation is to extrude a plastic sheath around the wire. (See 4I4a and Fig. 4I4a.) Flexible vinyl is a common insulating material but is only one of several plastics that may be used. For common electrical cable for household and other building wiring, after each wire is insulated, two, three, or four wires are run together through a machine that wraps kraft paper over the wires. Another extrusion of the outer insulation follows, with the wrapped wires as the core. Wire intended for high flexibility is made from multiple strands, drawn to a small diameter and twisted together with other strands to achieve the total diameter needed for the desired current-carrying capacity. Appliance power cords and extension cords are made by this approach.

wire forms - include such items as dish drainers, coat hangers, hooks, clips, oven or refrigerator shelves, kitchen implement parts, store shelves and racks, shopping cart components, and similar open-frame components made from joined pieces of heavy wire. The wire parts for these assemblies are normally made on four-slide machines (2G2). Wire in coils is fed through straighteners and to the machines, which cut off, form, and discharge individual parts, but regular punch press forming (2G1b), similar to that used with sheet stock, is also used. Individual formed pieces are placed in fixtures and fastened together by resistance-welding methods (7C6). In high production situations, several joints are welded simultaneously, with a multiple-electrode arrangement. Assemblies are then cleaned, electroplated (8C1), powder-coated (8D8) or coated with vinyl plastisol (8D10).

wire glass - See 5A3g.

wire, mechanical - is used for fencing, (including barbed wire fencing), cable making, screen and sieve making, in textiles, for various packaging and wrapping purposes, in making needles, nails, pins, hair pins, rivets, many cold-headed parts and for formed racks and holders made from stiff wire. Most of these applications use steel wire, though aluminum, brass, copper, stainless steel, and other metals may be involved.

The basic operation for mechanical wire is wire drawing, as described above for electrical wire and in section 2B2. The initial steel rod may be descaled by pickling (8A2f) before drawing, and is lubricated during the drawing operation with oil or a soap solution. Metals subject to work hardening may be annealed (8G1) or stress relieved (8G2d), between drawing operations.

When reduced to the proper diameter, the wire may be galvanized (8F2) for corrosion protection or may be plated with zinc, nickel alloy, chromium or other metals, or may be painted or coated with vinyl plastisol (8D10) or other plastics (8D8).

Wire ropes and cables are made by twisting together a number of strands of finer wire.

wooden I-joists - See 6F7 and Fig. 6F7-1.

wood veneer - See 6F1.

wool - is a fiber made from the protective fleece of sheep. The operations involved in making these fibers into useful products are as follows:

1. Wool is received in bales or packed bags and is sorted and graded by skilled workers in accordance with the fineness, length, elasticity, and strength of the fibers so that like varieties are kept together or blended as necessary.
2. *Scouring* - The wool is thoroughly washed in a mild alkaline solution with soap to remove foreign material. It may be treated with a solvent to remove excess wool grease.
3. The wool is dried to a moisture content of about 12 to 16 percent.
4. Treatment of the wool with various oils takes place to maintain its softness and provide lubrication for subsequent spinning operations.
5. If dyeing is to take place with the raw stock, it is done at this point. (It may instead take place later with the yarn or fabric)
6. *Blending* - Wool of several grades may be blended together at this stage to provide suitable properties for the intended process and application. Some synthetic fibers (acrylics, polyesters or nylon) and/or a small amount of cotton may be added to the mixture. The choice of added fibers and their quantities depends on the properties (strength, drape, body, hand, warmth, and absorbency) wanted in the finished fabric.
7. The wool is carded. (See 10B2.) to produce a yarn suitable for spinning. (*Carding* is a process similar to combing and brushing that disentangles bunches and locks of fibers and eliminates burrs, foreign materials, and fibers that are too short.) There are two varieties of wool yarn and fabrics: worsted and woolen. Regular woolen yarns contain a wider variety of raw wool, with more irregular yarns and a more open and hairy structure. Worsted yarns undergo further operations.

   Separate process paths are followed from this point, depending on whether the finished fabric will be a woolen or a worsted. For woolens, the result of the carding operation is roving, a rope of wool, suitable for spinning. Worsted fabrics require their fibers to undergo the further operations of grilling, combing and drawing. Fig. W2 shows the differences in the operational sequences for woolen and worsted fabrics.

7a. *Grilling* and *combing* (See 10B3.) - The worsted yarn is processed to remove the shorter fibers (noils), which are used for regular woolens or felts, and arrange the longer fibers in a more parallel orientation in a uniform thick strand called a "wool top". Some further loose impurities are also removed.

7b. *Drawing* (See 10B4.)-runs the strand through rollers that reduce the strand in diameter, mix the fibers and make them more parallel and create a thinner, twisted yarn called "slubbers".

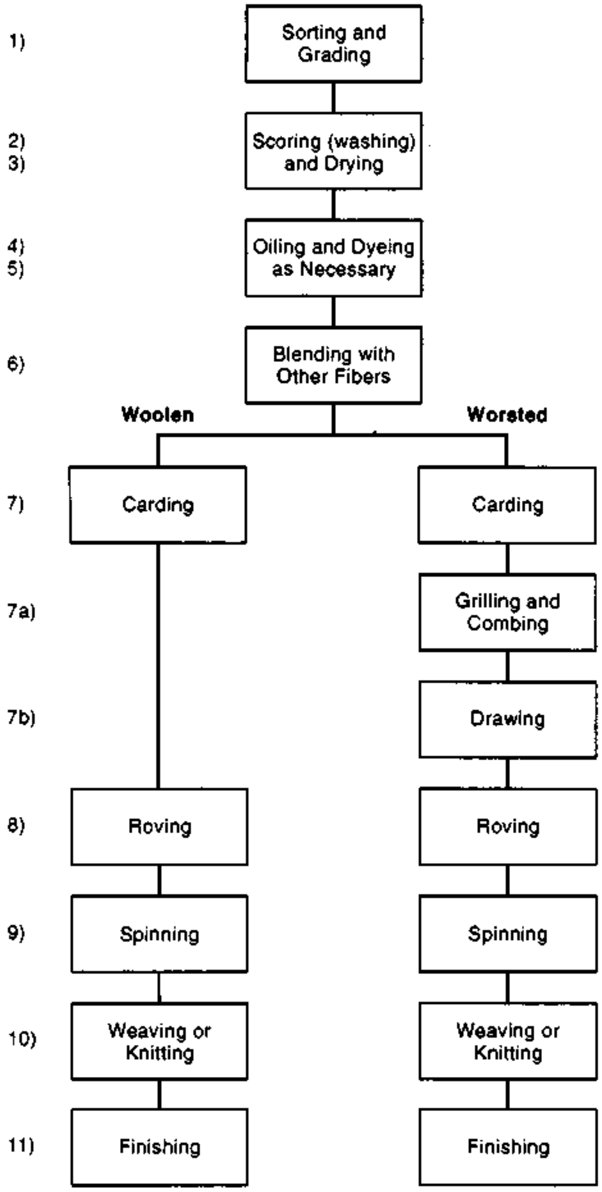

Fig. W2 The operation sequence for manufacture of both woolen and worsted fabrics from wool.

8. For both varieties of wool fabric, *roving*, a light twisting operation, may take place to hold the thin slubbers in place.
9. The *spinning* operation now takes place. (See 10B5.) This operation is performed on a spinning machine that produces yarn ready for conversion to a fabric.
10. Spun yarn of either variety is processed into fabric by *weaving* (10C) or *knitting* (10D).

    Both woolen and worsted woven fabrics are normally between 54 and 70 in (1.4 and 1.8 m) wide, and 50 to as many as 140 yards (46 to 130 m) long. Both woolen and worsted yarns are knitted by machine into garments such as sweaters or socks, or fabric to be made into coats, dresses, and other garments. Yarns for hand knitting are also produced from wool.
11. Woolen and worsted cloth undergo *finishing* operations (10F) at some time during the manufacturing process, especially after weaving. The purpose of the finishing processes is to improve the appearance and feel of the finished product. There are two predominant finishes: clear finishes and face finishes. The clear finishes, normally given to worsteds, provide an even surface without nap, with prominent colors. The face finishes, in contrast, have a distinct pile or nap, more subdued colors, and a less distinct weave. Dyeing is a common finishing operation that may take place anywhere in the manufacturing process. Printing is another operation that is used with neckties, beachwear, and dress fabrics. Wool is used primarily for clothing. Other wool products are blankets, rugs, carpets, upholstery, and draperies. Industrial felt and cloths are other uses. Wool felt is made from un-spun fibers that, because of the nature of wool fibers, adhere tightly together. Felts undergo a combined mechanical-chemical process involving both heat and moisture. Unwoven felt is used in the hat industry, and in a number of industrial applications as a covering or padding. Woven felt is used in pianos, printing, and in optical and chemical industries.

woolen fabric - is woven or knitted. See *wool* above, Chapter 10 and Fig. W2.

woven fabrics - See 10A, 10B and 10C.

wrenches - are most commonly produced by drop forging (2A4b1), normalizing (8G2e) and a number of other operations. They are made from chrome-vanadium steel or medium carbon steel (0.25 to 0.55% carbon). A minority of wrenches are made by sand-mold casting (1B) or investment casting (1G). Press trimming of flash may follow forging and then barrel or vibratory tumbling is used to improve surface smoothness. Some surfaces, for example, the contacting surfaces of open-end wrenches are machined on milling machines (3D) or on special grinding machines (3C3). The end openings of box wrenches are broached (3F). Deburring, heat treating, usually by induction (8G3a2), and tempering (8G2f), for hardness and wear resistance follow machining of most wrenches. Finish grinding of some surfaces may follow heat treatment. Other finishing is normally by polishing (8B1) and chromium electroplating (8C1) though some wrenches are given a black oxide surface treatment (8E4). Adjustable wrenches have additional parts and additional machining operations to provide adjustability. The adjusting screws for adjustable open-end wrenches are screw machine parts (3A2c), with the crests of the threads knurled.

wrench sockets - Sockets are either impression die forged (2A4b) or investment cast (1G), of chrome-vanadium steel. Broaching of the internal surfaces may also take place. Heat treatment by induction hardening (8G3a2) follows. After the initial operation, the external socket surfaces are polished (8B1) and chromium plated (8C1).

writing paper - The best quality writing paper is rag paper, or paper made from rags, or scrap cuttings of linen or cotton, or from a combination of rags and wood pulp. See 9B and, especially, 9B1 and 9B3.

X

xylene (xylol) - is usually a mixture of three closely-related volatile liquids that occur together. They all have the formula $C_6H_4(CH_3)_2$ and very close boiling points. They are colorless and used together as paint and ink solvents, in small amounts in aircraft fuel, and individually, as ingredients in dyes and plastics. They are made from the fractional distillation of petroleum (11H1a) or coal tar.

Y

yarn - consists of bundles of fibers twisted or laid together to form continuous strands[2]. Ply or plied yarns are single strand yarns twisted together. Cabled yarn or cord consists of ply yarns twisted together[2]. (See 10B.)

yogurt - is semi-fluid fermented milk. Two yogurt cultures, lactobacillus bulgaricus and streptococus thermophilus, are added to pasturized, homogenized cow's milk. (Goat, sheep, and water buffalo milk is used in some countries.) In commercial production, milk solids are added to provide a custard-like consistency. (In home production, the milk is boiled to concentrate it, and a portion of a previous yogurt batch is added to provide the cultures.) The mixture is placed in a temperature-controlled environment of 110 to 112°F (43 to 44°C) for four or five hours by which time curd forms. Fresh fruit, jam, juices, sweeteners and flavorings may be added before the yogurt is packaged for sale.

Z

zinc - is produced chiefly from two ores, sphalerite (zinc sulfate) and smithsonite (zinc carbonate). The ores are transformed into zinc oxide by heating them to a high temperature in the presence of air. This converts them to zinc oxide. (See roasting - 11K1b1.) The oxide is reduced by heating in the presence of carbon. In one process, enough heat is used in the electric reducing furnace to melt, boil and then distill the zinc. The metal thus produced contains small amounts of some other metals and is called spelter. In another process, the oxide is leached with sulfuric acid. The resulting solution is processed to remove impurities and is then electrolyzed, producing zinc of high purity. (See electrorefining - 11K1c2.)

Zinc is used for plated or dipped coatings on ferrous materials for corrosion protection (galvanizing). It is also used for die casting, particularly of smaller parts, because of its excellent castability, as an alloying ingredient (See *brass*), and in dry-cell batteries.

zippers[13] - have several basic parts; 1) the teeth that interlock to hold the zipper and the attached garment opening closed, 2) the fabric tape that supports the teeth, 3) two stringers, the assemblies of tape and teeth that can mesh together from each side, 4) a slider that joins or separates the teeth of the two stringers, 5) stops, which are fittings that prevent the slider from moving off the end of the stringer, 6) a tab attached to the slider to make it easier to grasp and move. See Fig. Z1.

The tapes are made with conventional textile methods, primarily knitting, with a strong hem or bead where the teeth are attached (Chapter 10). Cotton and polyester are the usual fabrics. The teeth are now mostly made from plastics, commonly nylon, but polyacetal and polyester are also used. Metal teeth are made from brass, steel, aluminum or zinc. Some are painted, plated, or given a black oxide finish to match or complement the product's color. The teeth are formed and attached to the tape in special machines. Zinc teeth can be die cast right onto the tapes in special die casting machines. Some plastic teeth are injection molded onto the tape in similar special injection molding machines. However, machines that form the teeth from either flattened metal or plastic wire are also widely used. These machines usually form the wire into a Y-shape, with the bottom of the Y formed into a cup-like shape or other shape that

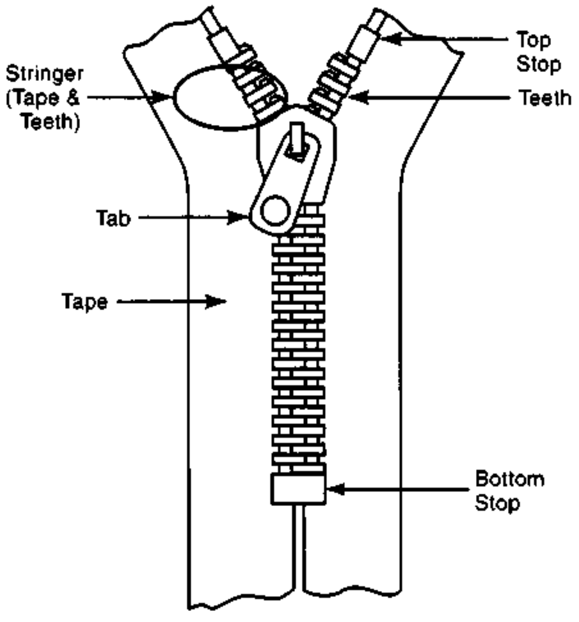

Fig. Z1 a typical zipper assembly.

will engage with and hold the opposing teeth. The tape is fed to the machine and the arms of the Y's are clamped together to hold the teeth in place on the tape. All this forming is done automatically at a high speed, producing continuous tapes of assembled stringers. The slide, stops, and tabs, are made by metal-forming methods, are injection molded, if plastic, or die cast, if zinc. The stringers are fed to machines that join both sides together, apply a wax lubricant to the teeth, and deburr them by wire brushing (if the teeth are metal), apply starch to stiffen the tapes, dry and straighten the tapes, and roll them onto large spools for later processing. Then, later, the tapes are cut to standard lengths, or the special lengths needed, and top and bottom stops, slider, and tabs are assembled and fastened. The completed zipper assemblies are sold in standard lengths to garment, luggage, and other manufacturers, who sew them into their products, and to distributors for eventual sale to individuals.

References

1. Encyclopedia Britannica, Deluxe CD Rom edition, 2002.
2. Materials Handbook, G. S. Brady and H. R. Clauser, McGraw-Hill, New York, 1997.
3. McGraw-Hill Encyclopedia of Science and Technology, McGraw-Hill, New York, 1998.
4. Shreve's Chemical Process Industries, 5th ed., G. T. Austin, McGraw-Hill, New York, 1984.
5. Encarta 2004 Encyclopedia Standard - Microsoft, Inc. Redmond, WA.
6. Perry's Chemical Engineers' Handbook, 7th edition, D. W. Green, ed., McGraw-Hill, N.Y. 1997.
7. The Engineering Handbook, R. C. Dorf, CRC Press - IREE Press, 1996, ISBN 0-8493-8344-7.
8. Grolier Encyclopedia, Grolier Electronic Publishing, Inc., 2002, Danbury, CT.
9. How Products Are Made - N. Schlager, ed., Gale Research, Inc., Detroit, 1994.
10. Design for Manufacturability Handbook, J. G. Bralla, editor, McGraw-Hill, New York, 1999.
11. Encyclopedia Americana, 2000.
12. Electronic Components, Victor Meeldijk, John Wiley, New York, 1996.
13. CDs, Super Glue and Salso, How Everyday Products are Made, (Series 1, 2 and 3), S. Rose and N. Schlager, K. Witman, K. L. Kalasky, M. L. Rein, Gale Research, Detroit, 1995, 1996 and 2003.
14. http://www.encyclopedia.com - from the internet.
15. Plastics Handbook, ed. Modern Plastics, McGraw-Hill, New York, ISBN 042805-0.
16. Design for Excellence, James G. Bralla, McGraw-Hill, New York, 1996.
17. Cam Design and Manufacturing Handbook, Robert L. Norton, Industrial Press, Inc., New York, 2002.
18. Factory Made - How Things Are Manufactured, Leonard Gottlieb, Houghton Mifflin Co., Boston 1978.
19. The Complete Book of Jewelry Making, Carles Godina, Lack Books, Sterling Publishing, New York, 1999.
20. Introduction to Lapidary, Pansy D. Kraus, Chilton Book Co., Radnor, PA 1987.
21 Firearms Encyclopedia, G. C. Nonte, Jr., Popular Science Publishing Co., 1973.
22. Gem Cutting, A lapidary's Manual, 3rd ed., John Sinkankas, Van Nostrand Reinhold, New York, 1984.
23. Breakfast Cereals and How They Are Made, 2nd ed., R. B. Fast and E. F. Caldwell, American Association of Cereal Chemists, St. Paul, 2000.
24. Understanding Wood Finishing, B. Flexner, Rodale Press, Emmaus, Pennsylvania, 1994.
25. The Tool and Manufacturing Engineers Handbook, 4th edition, Vol. II, Forming, Charles Wick editor, Society of Manufacturing Engineers, Dearborn, MI, 1984.
26. How Jet Engines Are Made, Julian Moxon, Facts On File Publications, Bicester, England, 1985.
27. Jet Propulsion, Nicholas Cupsty, Cambridge University Press, United Kingdom, 1997.
28. Superweld - Unlocking the Potential of High-Temperature Superconductors, Energy Science News, internet: http://www.pnl.gov/energyscience/08-00/art2.htm.
29. Glass Engineering Handbook, E. B. Shand, McGraw-Hill, New York.
30. Scientific American, Vol. 292, No. 4, April 2005, "Low-Temperature Superconductivity is Warming Up."

INDEX